DRIVELINE COMPONENTS

CATALOGUE 2026

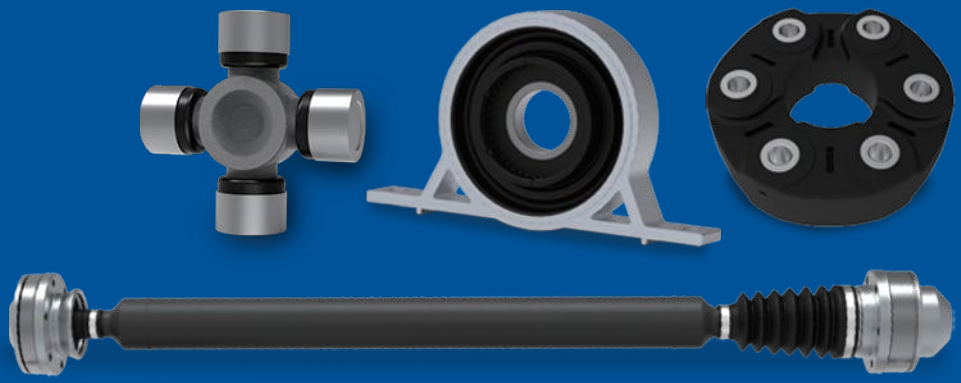

GSP®

GSP AUTOMOTIVE GROUP

GSP Automotive Group is a leading manufacturer for automotive parts for the worldwide aftermarket. Since 1985, GSP continues to produce constant velocity joints, drive shafts, hub assemblies, rubber-to-metal parts as well as steering & suspension parts.

The GSP team supports over 120 countries and counting. With our diverse range of native professionals, we bring customer care and expertise to each market.

WIDE RANGE PRODUCTS

1. DRIVELINE
2. WHEEL BEARING
3. RUBBER TO METAL PART
4. STEERING & SUSPENSION PART
5. SHOCK ABSORBER
6. PROPSHAFT PART

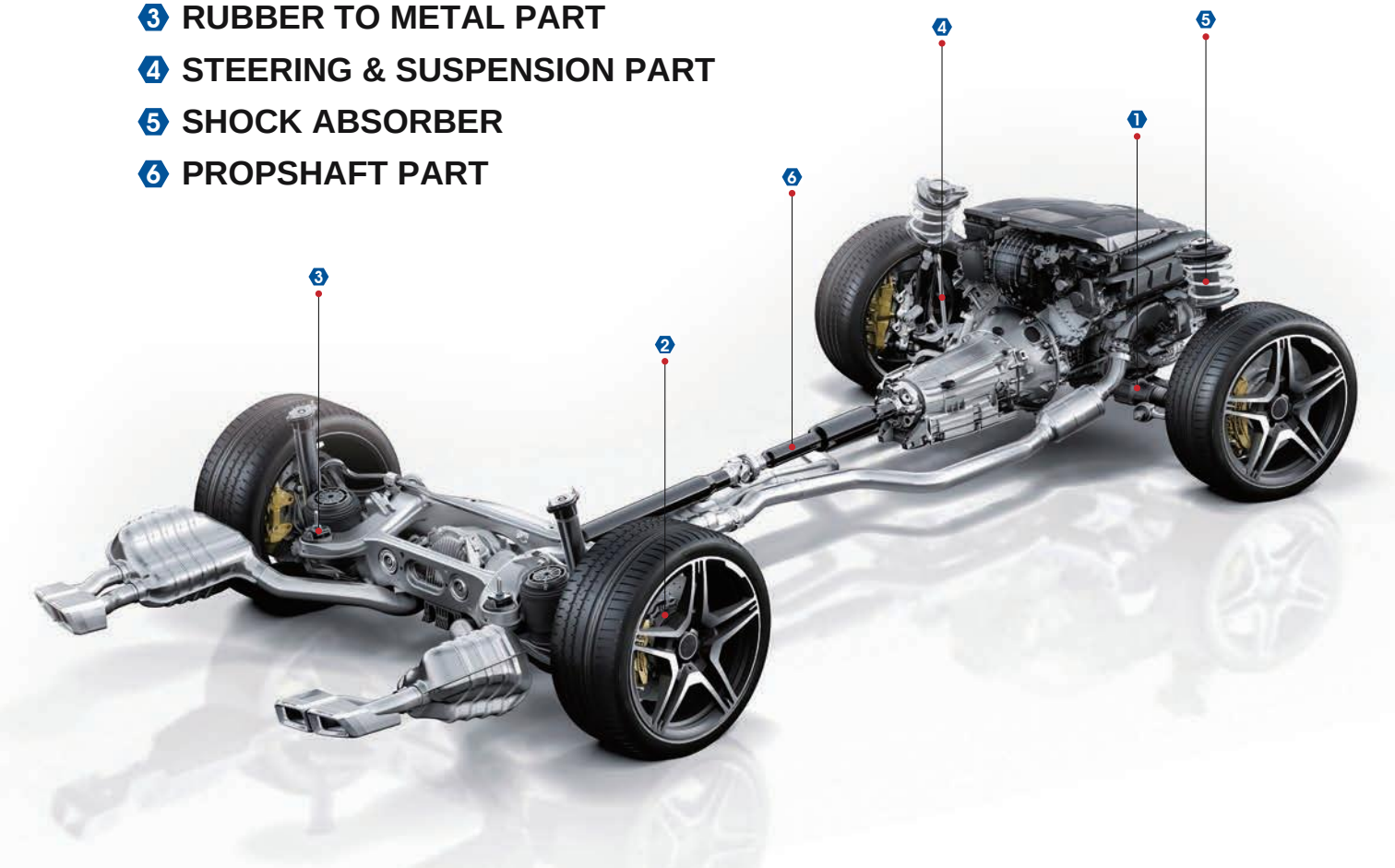

- Models covered over 95% of the worldwide automotive market
- One-stop solution for the automotive aftermarket
- Small batch sourcing with a variety of categories

GSP®

WORLDWIDE LOCATION

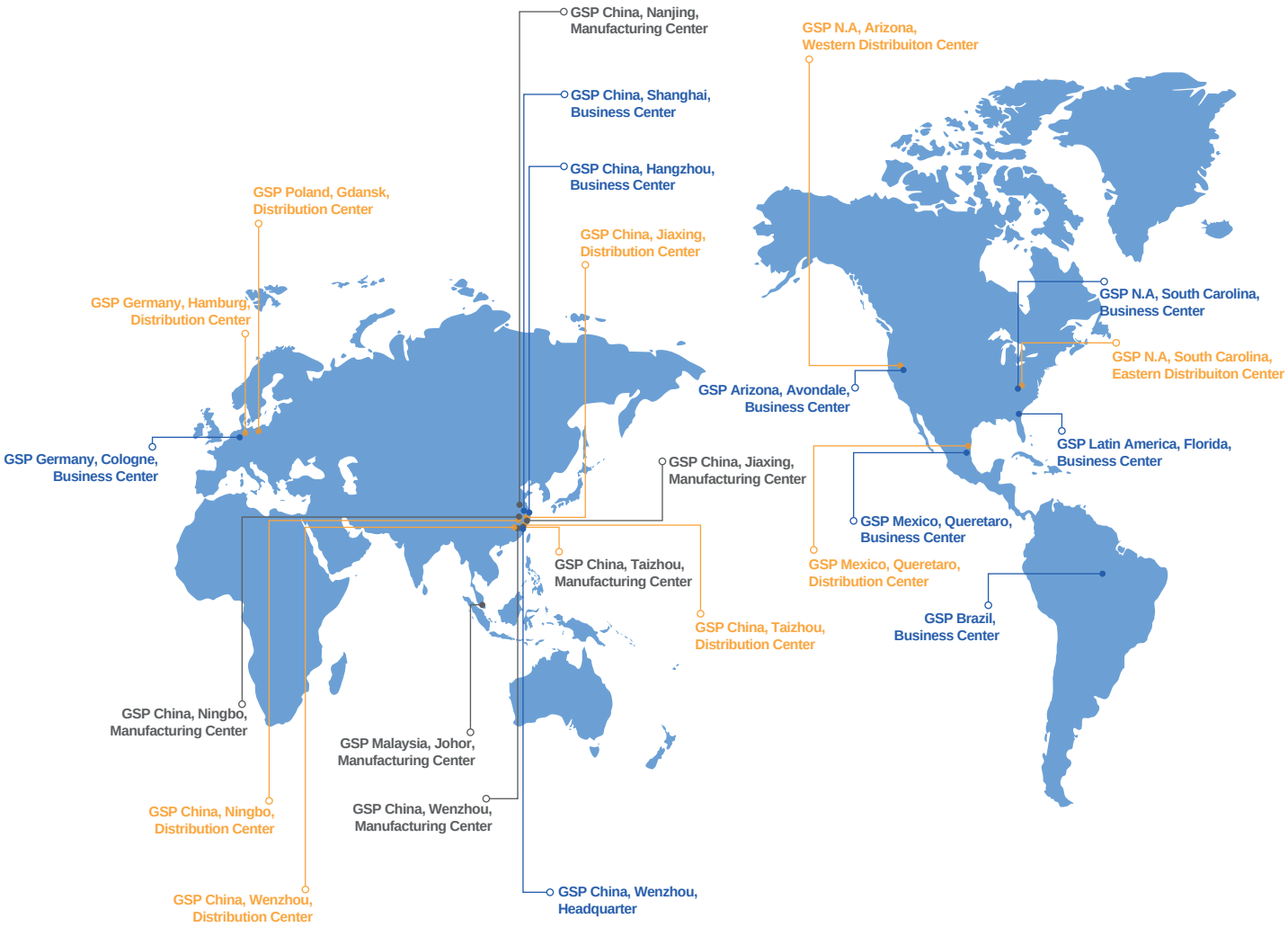

- Manufacturing Center
- Distribution Center
- Business Center

PREMIUM QUALITY

GSP has been certified by ISO 14001, ISO 45001 and IATF 16949, etc.With the strict screening and monitoring of the raw material, GSP is carrying out quality control on the whole product production process.

CUSTOMER SERVICES

ISO 14001 ISO 45001 IATF 16949 EAC TecAlliance

Worldwide customer services teams support nine majority languages and provide localized service to customers.

Trackable data from raw material sourcing to sales that offered consistently services to each customer.

GSP®

Propshaft

Joint Propshaft

Center Bearing

Flexible Coupling

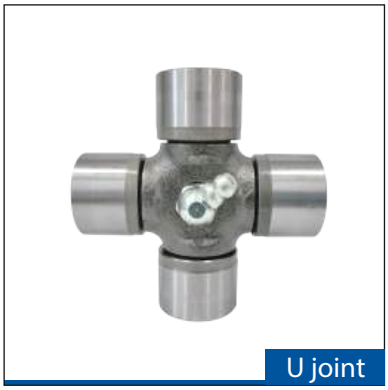

U joint

GENERAL INDEX

Vehicle Index…… ....page.I-IX

Applications……page.001-450

Cross References List And Photo……..……page.451-555

Basic Dimension Table-GSP to Dimension.....page.556-583

New applications (compared with catalogue 2025)……..……page.584-584

MAKE-MODEL	PAGE
ACURA	
MDX	1
RDX	1
ZDX	1
ALFA ROMEO	
75	1
90	1
Alfetta	1
Alfetta GT	1
Giulietta	1
Stelvio	1
AUDI	
A3	1
A3 Cabrio Quattro	1
A3 Quattro	2
A3 Sportback	3
A3 Sportback Quattro	3
A3/S3 Limousine quattro	4
A4 Allroad Quattro	4
A4 Cabrio Quattro	5
A4 Quattro	5
A5 Cabrio Quattro	6
A5 Quattro	6
A5 Sportback Quattro	7
A6 Allroad Quattro	7
A6 Quattro	8
A7 Sportback Quattro	11
A8 Quattro	12
Allroad Quattro	12
Q2 Quattro	12
Q3	12
Q3 Quattro	12
Q3 Sportback Quattro	14
Q5	14
Q5 Quattro	14
Q7 Quattro	15
RS3 Quattro	16
RS3 Sportback Quattro	16
RS4 Quattro	16
RS6 Quattro	16
RSQ3 Quattro	16
S1 Quattro	16
S1 Sportback Quattro	16
S3 Cabrio Quattro	17
S3 Quattro	17
S3 Sportback Quattro	18
S4 Cabrio Quattro	18
S4 Quattro	18
S5 Quattro	18
S6 Plus Quattro	18
S6 Quattro	18
S7 Sportback Quattro	19
S8 Quattro	19
SQ5 Quattro	19
TT Quattro	19
TT Roadster Quattro	20
TTS Quattro	20
AUDI (FAW)	
A4L Quattro	20
A6L Quattro	20
BENTLEY	
Continental Flying Spur	20
Continental GT	20
BMW	
114d	20
114i	21
116d	21
116i	22
118d	23
118d Cabrio	24
118d Coupe	24
118d xDrive	24
118i	25
118i Cabrio	26
120d	26

MAKE-MODEL	PAGE
BMW	
120d Cabrio	28
120d Coupe	29
120d xDrive	29
120i	30
120i Cabrio	31
120i Coupe	31
123 xDrive	31
123d	31
123d Cabrio	32
123d Coupe	32
125d	32
125i	32
125i Cabrio	33
125i Coupe	33
128i Cabrio	33
128i Coupe	33
130i	33
135i Cabrio	34
135i Coupe	34
218d Cabrio	34
218d Coupe	34
218d xDrive Active Tourer	34
218d xDrive Gran Tourer	34
218i Cabrio	35
218i Coupe	35
220d Cabrio	35
220d Coupe	35
220d xDrive Active Tourer	35
220d xDrive Coupe	36
220d xDrive Gran Coupe	36
220d xDrive Gran Tourer	36
220i Cabrio	36
220i Coupe	36
220i xDrive Gran Coupe	36
223d xDrive Active Tourer	36
223i xDrive Active Tourer	36
225d Cabrio	36
225d Coupe	36
225e xDrive Active Tourer	37
225i xDrive Active Tourer	37
228i Cabrio	37
228i Coupe	37
228i xDrive Gran Coupe	37
230e xDrive Active Tourer	37
230i Cabrio	37
230i Coupe	37
3 ActiveHybrid	37
316d	37
316d Touring	37
316i	38
316i Compact	39
316i Coupe	39
316i Touring	39
318d	40
318d Compact	41
318d Gran Turismo	41
318d Touring	41
318d xDrive	42
318d xDrive Touring	42
318i	42
318i Cabrio	43
318i Compact	44
318i Coupe	44
318i Touring	45
320d	46
320d Cabrio	47
320d Compact	48
320d Coupe	48
320d Gran Turismo	49
320d Touring	49
320d xDrive	50
320d xDrive Coupe	51
320d xDrive Gran Turismo	51
320d xDrive Touring	52

MAKE-MODEL	PAGE
BMW	
320i	52
320i Cabrio	54
320i Coupe	54
320i Gran Turismo	55
320i Touring	55
320i xDrive	56
320i xDrive Gran Turismo	57
320i xDrive Touring	57
323i	57
323i Cabrio	58
323i Compact	58
323i Coupe	58
323i Touring	58
325d	59
325d Cabrio	59
325d Coupe	60
325d Gran Turismo	60
325d Touring	60
325i	60
325i Cabrio	61
325i Compact	62
325i Coupe	62
325i Touring	63
325i xDrive	64
325i xDrive Coupe	64
325i xDrive Touring	64
325is	64
325xi	64
325xi Touring	64
328i	64
328i Cabrio	65
328i Coupe	65
328i Gran Turismo	65
328i Touring	65
328i xDrive	66
328i xDrive Coupe	66
328i xDrive Gran Turismo	66
328i xDrive Touring	66
328i xi	66
328xi Touring	66
330Ci	66
330Ci Coupe	66
330d	66
330d Cabrio	67
330d Coupe	68
330d Gran Turismo	68
330d Touring	68
330d xDrive	69
330d xDrive Coupe	69
330d xDrive Gran Turismo	69
330d xDrive Touring	70
330e	70
330e xDrive Touring	70
330i	70
330i Cabrio	71
330i Coupe	71
330i Gran Turismo	72
330i Touring	72
330i xDrive	72
330i xDrive Coupe	73
330i xDrive Gran Turismo	73
330i xDrive Touring	73
330xi	73
335d	73
335d Coupe	73
335d Touring	73
335d xDrive	73
335d xDrive Gran Turismo	73
335d xDrive Touring	73
335i	74
335i Cabrio	74
335i Coupe	75
335i Gran Turismo	75
335i Touring	75

MAKE-MODEL	PAGE	MAKE-MODEL	PAGE	MAKE-MODEL	PAGE
BMW		**BMW**		**BMW**	
335i xDrive	76	525d	96	640i xDrive Gran Coupe	114
335i xDrive Coupe	76	525d Touring	97	640i xDrive Gran Turismo	114
335i xDrive Gran Turismo	76	525d xDrive	98	645i Cabrio	114
335i xDrive Touring	76	525d xDrive Touring	98	645i Coupe	114
340i	76	525i	98	650i Cabrio	114
340i Gran Turismo	76	525i Touring	99	650i Coupe	114
340i Touring	77	528i	100	650i Gran Coupe	115
340i xDrive	77	528i Gran Turismo	100	650i xDrive Cabrio	115
340i xDrive Gran Turismo	77	528i Touring	100	650i xDrive Coupe	115
340i xDrive Touring	77	528i xDrive	101	650i xDrive Gran Coupe	115
418d Coupe	77	528i xDrive Touring	101	7 ActiveHybrid	115
418d Gran Coupe	77	530d	101	725d	115
418i Coupe	77	530d Gran Turismo	102	728i	115
418i Gran Coupe	78	530d Touring	102	730d	115
420d Cabrio	78	530d xDrive	103	730d xDrive	116
420d Coupe	78	530d xDrive Gran Turismo	103	730i	116
420d Gran Coupe	79	530d xDrive Touring	103	735i	117
420d xDrive Coupe	79	530e	104	740d	117
420d xDrive Gran Coupe	79	530e Touring	104	740d xDrive	117
420i Cabrio	80	530e xDrive	104	740e	117
420i Coupe	80	530e xDrive Touring	104	740e xDrive	118
420i Gran Coupe	81	530i	104	740i	118
420i xDrive Coupe	81	530i Touring	105	740i xDrive	118
420i xDrive Gran Coupe	82	530i xDrive	106	745d	118
425d Cabrio	82	530i xDrive Touring	106	745i	118
425d Coupe	82	535d	106	750d xDrive	118
425d Gran Coupe	82	535d Gran Turismo	107	750i	119
428i Cabrio	83	535d Touring	107	750i xDrive	119
428i Coupe	83	535d xDrive	107	760i	119
428i Gran Coupe	83	535d xDrive Gran Turismo	107	840d xDrive Cabrio	119
428i xDrive Cabrio	83	535d xDrive Touring	108	840d xDrive Coupe	119
428i xDrive Coupe	83	535i	108	840d xDrive Gran Coupe	119
428i xDrive Gran Coupe	83	535i Gran Turismo	108	840i	119
430d Cabrio	83	535i Touring	108	840i Cabrio	119
430d Coupe	83	535i xDrive	108	840i Coupe	119
430d Gran Coupe	83	535i xDrive Gran Turismo	108	840i Gran Coupe	119
430d xDrive Coupe	84	535i xDrive Touring	109	840i xDrive Gran Coupe	119
430d xDrive Gran Coupe	84	540d xDrive	109	850i	120
430i Cabrio	84	540d xDrive Touring	109	M Coupe	120
430i Coupe	84	540i	109	M135 xDrive	120
430i Gran Coupe	84	540i Touring	109	M135i	120
430i xDrive Cabrio	84	540i xDrive	109	M135i xDrive	120
430i xDrive Coupe	85	540i xDrive Touring	110	M140i	120
430i xDrive Gran Coupe	85	545e xDrive	110	M140i xDrive	120
435d xDrive Cabrio	85	545i	110	M2 Coupe	120
435d xDrive Coupe	85	545i Touring	110	M235i Cabrio	120
435d xDrive Gran Coupe	85	550i	110	M235i Coupe	120
435i Cabrio	85	550i Gran Turismo	110	M235i xDrive Cabrio	121
435i Coupe	85	550i Touring	111	M235i xDrive Coupe	121
435i Gran Coupe	85	550i xDrive	111	M235i xDrive Gran Coupe	121
435i xDrive Cabrio	86	550i xDrive Gran Turismo	111	M240i Cabrio	121
435i xDrive Coupe	86	620d Gran Turismo	111	M240i Coupe	121
435i xDrive Gran Coupe	86	620d xDrive Gran Turismo	111	M240i xDrive Cabrio	121
440i Cabrio	86	630d Gran Turismo	111	M240i xDrive Coupe	121
440i Coupe	86	630d xDrive Gran Turismo	112	M3	121
440i Gran Coupe	86	630i Cabrio	112	M3 Cabrio	121
440i xDrive Cabrio	86	630i Coupe	112	M3 Coupe	121
440i xDrive Coupe	86	630i Gran Turismo	112	M340d xDrive	121
440i xDrive Gran Coupe	87	630i xDrive Gran Turismo	112	M340d xDrive Touring	121
5 ActiveHybrid	87	635d Cabrio	112	M340i xDrive	121
518d	87	635d Coupe	112	M340i xDrive Touring	121
518d Touring	87	640d Cabrio	113	M4 Cabrio	122
518i	88	640d Coupe	113	M4 Coupe	122
518i Touring	88	640d Gran Coupe	113	M440d xDrive Cabrio	122
520d	88	640d xDrive Cabrio	113	M440d xDrive Coupe	122
520d Gran Turismo	89	640d xDrive Coupe	113	M440i Cabrio	122
520d Touring	89	640d xDrive Gran Coupe	113	M440i xDrive Cabrio	122
520d xDrive	91	640d xDrive Gran Turismo	113	M440i xDrive Coupe	122
520d xDrive Touring	91	640i Cabrio	113	M440i xDrive Gran Coupe	122
520e	92	640i Coupe	113	M5	122
520i	92	640i Gran Coupe	113	M5 Touring	122
520i Touring	93	640i Gran Turismo	113	M550d xDrive	122
523i	95	640i xDrive Cabrio	113	M550d xDrive Touring	122
523i Touring	95	640i xDrive Coupe	113	M550i xDrive	122

MAKE-MODEL	PAGE
BMW	
M6 Cabrio	122
M6 Coupe	122
M6 Gran Coupe	122
M760i xDrive	122
M850i xDrive Cabrio	123
M850i xDrive Coupe	123
M850i xDrive Gran Coupe	123
X1 sDrive 16d	123
X1 sDrive 16i	123
X1 sDrive 18d	123
X1 sDrive 18i	123
X1 sDrive 20d	123
X1 sDrive 20i	124
X1 sDrive 28i	124
X1 xDrive 18d	124
X1 xDrive 20d	124
X1 xDrive 20i	125
X1 xDrive 23d	125
X1 xDrive 23i	125
X1 xDrive 25d	125
X1 xDrive 25e	125
X1 xDrive 25i	125
X1 xDrive 28i	125
X1 xDrive 35i	126
X2 xDrive 18d	126
X2 xDrive 20d	126
X2 xDrive 20i	126
X2 xDrive 25d	126
X2 xDrive M35i	126
X3	126
X3 sDrive 18d	127
X3 sDrive 20i	128
X3 sDrive 28i	128
X3 xDrive 18d	128
X3 xDrive 20d	128
X3 xDrive 20i	129
X3 xDrive 25d	129
X3 xDrive 25i	129
X3 xDrive 28i	129
X3 xDrive 30d	129
X3 xDrive 30e	130
X3 xDrive 30i	130
X3 xDrive 35d	130
X3 xDrive 35i	130
X3 xDrive M40d	130
X3 xDrive M40i	130
X4 xDrive 20d	130
X4 xDrive 20i	130
X4 xDrive 25d	131
X4 xDrive 28i	131
X4 xDrive 30d	131
X4 xDrive 30i	131
X4 xDrive 35d	131
X4 xDrive 35i	131
X4 xDrive M40d	131
X4 xDrive M40i	131
X5	132
X5 M	133
X5 sDrive 25d	134
X5 xDrive 25d	134
X5 xDrive 28i	134
X5 xDrive 30d	134
X5 xDrive 30i	135
X5 xDrive 35d	135
X5 xDrive 35i	135
X5 xDrive 40d	136
X5 xDrive 40e	136
X5 xDrive 40i	136
X5 xDrive 45e	136
X5 xDrive 48i	136
X5 xDrive 50i	136
X5 xDrive M50d	136
X5 xDrive M50i	137
X6 ActiveHybrid	137
BMW	
X6 M	137
X6 xDrive 30d	137
X6 xDrive 35d	138
X6 xDrive 35i	138
X6 xDrive 40d	138
X6 xDrive 40i	139
X6 xDrive 50i	139
X6 xDrive M50d	139
X6 xDrive M50i	139
X7 xDrive 30d	139
X7 xDrive 40i	139
X7 xDrive M50d	139
X7 xDrive M50i	139
Z3 Cabrio	139
Z3 Coupe	140
Z4 Cabrio	140
Z4 Coupe	141
Z4 M40i Cabrio	141
Z4 Roadster	141
Z4 sDrive 18i Cabrio	141
Z4 sDrive 20i Cabrio	141
Z4 sDrive 23i Cabrio	141
Z4 sDrive 28i Cabrio	141
Z4 sDrive 30i Cabrio	141
Z4 sDrive 35i Cabrio	142
Z4 sDrive 35is Cabrio	142
Z8 Cabrio	142
BMW (BRILLIANCE)	
318i	142
325i	142
335Li	142
520Li	142
523Li	142
525Li	142
530Li	142
BUICK	
Enclave	142
Envision	142
Rainier	142
Rendez Vous	142
Terraza	142
CADILLAC	
ATS	142
CTS	142
Escalade	143
Escalade EXT	143
SRX	143
STS	143
CADILLAC (SGM)	
CTS	144
CHERY	
Tiggo	144
CHEVROLET	
Astro	144
Astro Bus	144
Astro Extended Cargo	144
Avalanche	144
Avalanche 1500	144
Blazer	144
Blazer S10	144
C1500	144
C2500	144
Camaro	144
Captiva	145
Captiva Sport	145
Colorado	145
Colorado Standard Cab Pickup	145
Colorado/S10/Luv D-Max	145
Colorado/S10/LUV D-Max	145
Colorado/S10/Luv D-Max	146
Colorado/S10/LUV D-Max	146
Equinox	146
K1500 Extended Cab Pickup	146
K1500 Standard Cab Pickup	146
CHEVROLET	
K2500	146
K2500 Crew Cab Pickup	146
K2500 Extended Cab Pickup	146
S10	146
S10 Pickup	146
Silverado 1500	146
Silverado 1500 Crew Cab Pickup	146
Silverado 1500 Standard Cab Pickup	146
Silverado 2500	146
Silverado 2500 Crew Cab Pickup	147
Silverado 2500 HD	147
Silverado 2500 HD Standard Cab Pickup	147
Silverado 3500 HD	147
Silverado 3500 HD Standard Cab Pickup	147
Suburban	147
Suburban 1500	147
Suburban 2500	147
Suburban 3500 HD	147
Tahoe	147
Tracker	148
Trailblazer	148
Traverse	148
Trax	148
Uplander	148
CHRYSLER	
300	148
300C	148
Aspen	150
Pacifica	150
CUPRA	
Ateca	150
Formentor	150
Leon Sportstourer	151
DACIA	
Duster	151
DAF	
FA 65 CF 180	151
FA 65 CF 210	151
FA 65 CF 240	151
FA 65.180	151
FA 65.210	151
FA 65.240	151
FA 65.300	151
FA 75 CF 250	151
FA 75 CF 290	151
FA 75 CF 320	151
FA 75.250	151
FA 75.310	151
FA 75.360	151
FA 85 CF 340	151
FA 85 CF 380	151
FA 85 CF 430	151
FA 85.340	151
FAC 85 CF 340	151
FAC 85 CF 380	151
FAC 85 CF 430	152
FAD 75.250	152
FAD 75.310	152
FAD 75.360	152
FAD 85 CF 340	152
FAD 85 CF 380	152
FAG 75 CF 250,FAN 75 CF 250	152
FAG 75 CF 290,FAN 75 CF 290	152
FAG 75 CF 320,FAN 75 CF 320	152
FAG 75.250, FAN 75.250	152
FAG 75.310, FAN 75.310	152
FAG 75.360, FAN 75.360	152
FAR 75 CF 250,FAS 75 CF 250	152
FAR 75 CF 290,FAS 75 CF 290	152
FAR 75 CF 320,FAS 75 CF 320	152
FAR 75.250, FAS 75.250	152
FAR 75.310, FAS 75.310	152
FAR 75.360, FAS 75.360	152
FAT 75 CF 250	152

MAKE-MODEL	PAGE
DAF	
FAT 75 CF 290	152
FAT 75 CF 320	152
FAT 75.250	152
FAT 75.310	152
FAT 75.360	152
FAV 65 CF 180	152
FAV 65 CF 210	152
FAV 65.180	152
FAV 65.210	152
FT 75 CF 250	152
FT 75 CF 290	152
FT 75 CF 320	152
FT 75.250	152
FT 75.310	153
FT 75.360	153
FTG 85.460	153
FTG 85.480	153
FTG 85.510	153
FTP 85.340	153
FTP 85.380	153
FTP 85.430	153
FTP 85.480	153
FTR 85.360, FTS 85.360, FTP 85.360	153
FTR 85.410, FTS 85.410, FTP 85.410	153
FTR 85.460, FTS 85.460, FTP 85.460	153
FTR 85.510, FTS 85.510, FTP 85.510	153
FTR 95.380	153
FTR 95.430	153
FTR 95.480	153
FTR 95.530	153
FTS 95.380	153
FTS 95.430	153
FTS 95.480	153
FTS 95.530	153
FTT 95.380	153
FTT 95.430	153
FTT 95.480	153
FTT 95.530	153
DAIHATSU	
Hijet	153
Terios	154
DODGE	
Caliber	154
Challenger	154
Charger	154
Dakota	155
Dakota Crew Cab Pickup	155
Dakota Extended Cab	155
Dakota Standard Cab Pickup	155
Durango	155
Journey	156
Magnum	156
Nitro	156
Ram 1500	156
RAM 1500 Crew Cab Pickup	157
Ram 1500 Crew Cab Pickup	157
RAM 1500 Crew Cab Pickup	157
Ram 1500 Crew Cab Pickup	157
RAM 1500 Crew Cab Pickup	157
Ram 1500 Extended Cab Pickup	157
RAM 1500 Pickup	157
Ram 1500 Standard Cab Pickup	157
Ram 2500	157
Ram 2500 Cab & Chassis	157
Ram 2500 Crew Cab Pickup	157
RAM 2500 Extended Cab Pickup	157
Ram 2500 Standard Cab Pickup	157
RAM 2500 Standard Cab Pickup	157
Ram 3500	158
Ram Van	158
Sprinter 2500	158
Sprinter 3500	158
FIAT	
500X	158

MAKE-MODEL	PAGE
FIAT	
Panda	158
Panda Classic	159
Panda Van	159
FORD	
Consul	159
Fiesta	159
Focus CC	159
Galaxy	160
Granada	160
Grand Tourneo Connect	161
Kuga	161
Mondeo	161
Mondeo Estate/Wagon	162
Mondeo/Fusion	162
Ranger	162
S-Max	162
Scorpio	162
Scorpio/Granada	163
Tourneo Custom	163
Transit	163
Transit 100	163
Transit 120	163
Transit 150	163
Transit 260	163
Transit 280	164
Transit 290	164
Transit 300	164
Transit 310	166
Transit 330	166
Transit 350	169
Transit 370	174
Transit 410	174
Transit 430	174
Transit 460	176
Transit 470	177
Transit 80	177
Transit Connect	177
Transit Custom 250	177
Transit Custom 270	177
Transit Custom 290	177
Transit Custom 300	177
Transit Custom 310	177
Transit Custom 330	178
Transit Tourneo	178
FORD ASIA & OCEANIA	
Ranger	178
FORD AUSTRALIA	
F-150 Pickup	178
Falcon	178
FORD USA	
Edge	178
Escape	178
Expedition	178
Explorer	178
Explorer Sport Trac	179
F-150	179
F-150 Crew Cab Pickup	179
F-150 Extended Cab	179
F-150 Extended Cab Pickup	179
F-150 Standard Cab Pickup	179
F-250 Super Duty Crew Cab Pickup	179
F-250 Super Duty Extended Cab Pickup	180
F-250 Super Duty Standard Cab Pickup	180
F-350 Super Duty	180
F-350 Super Duty Cab & Chassis	180
F-350 Super Duty Crew Cab Pickup	180
F-350 Super Duty Extended Cab	180
F-350 Super Duty Standard Cab Pickup	180
Five Hundred	180
Flex	180
Freestyle	180
Fusion	180
Mustang	180
Ranger	180

MAKE-MODEL	PAGE
FORD USA	
Ranger Extended Cab Pickup	181
Ranger Standard Cab Pickup	181
Taurus	181
GEELY	
Boyue	181
GMC	
Acadia	181
Canyon	181
Envoy	181
Jimmy	181
Safar Extended Cargo Van	181
Safar Extended Passenger Van	181
Safar Standard Cargo Van	181
Safar Standard Passenger Van	181
Safari	181
Sierra 1500	182
Sierra 1500 Standard Cab Pickup	182
Sierra 2500 HD	182
Sierra 3500 HD	182
Sonoma	182
Terrain	182
Yukon	182
Yukon XL 1500	182
Yukon XL 2500	182
GREAT WALL	
Hover H3 (Haval)	183
Hover H5	183
Hover H5/Haval 5	183
HOLDEN	
Commodore	183
HONDA	
Civic	183
CR-V	183
Element	183
Elysion	183
HR-V	183
Pilot	183
Ridgeline	183
HONDA (GAC)	
Crosstour	183
HUMMER	
H2	184
H3	184
H3T	184
HYUNDAI	
Equus	184
Galloper	184
Genesis	184
Genesis Coupe	184
Genesis Prada	184
Grand Santa Fé	184
Grand Starex	184
H-1	184
H-1 Travel/Starex/Grand Starex/I800/Montana	184
H-1 Travel/Starex/Grand Starex/i800/Montana	184
H-1/Starex/Satellite/H200	184
H1	184
H1 Travel	185
H200	185
H300	185
i800	185
iLoad	185
iX35	185
iX55	186
Montana	186
Rohens Coupe	186
Santa Fé	186
Satellite	188
Starex	188
Tucson	188
Tucson ix	189
Tucson iX35	189
Veracruz	189

MAKE-MODEL	PAGE
HYUNDAI (BEIJING)	
Santa Fé	189
Tucson	189
HYUNDAI (HUATAI)	
Santa Fé	189
INFINITI	
FX35	189
FX37	189
FX45	189
G35	189
G37	189
M35	189
M37	189
Q45	189
Q70	189
QX4	189
QX50	189
QX56	189
QX70	189
ISUZU	
Ascender	190
D-Max	190
Pickup	190
Rodeo	190
IVECO	
60 E 14 K tector	190
60 E 14 tector, 60 E 14 P tector	190
65 E 14 K tector	190
65 E 14 tector, 65 E 14 P tector	190
75 E 14 K tector	190
80 E 18 K tector	190
80 E 18 K tector, 80 E 18 DK tector	190
80 E 18 tector, 80 E 18 P tector, 80 E 18 FP tector	190
80 E 21 K, 80 E 21 DK tector, 80 E 22 K tector	190
Daily 29L11	190
Daily 29L15	190
Daily 29L15P	190
Daily 29S11	190
Daily 30.10	190
Daily 30.8	190
Daily 33S11	190
Daily 33S13	190
Daily 33S13P	190
Daily 33S15	190
Daily 33S15P	190
Daily 35.10	191
Daily 35.12	191
Daily 35.8	191
Daily 35C10	191
Daily 35C11	191
Daily 35C11P	191
Daily 35C12	191
Daily 35C12P	191
Daily 35C13	191
Daily 35C13P	191
Daily 35C14	191
Daily 35C14P	192
Daily 35C15	192
Daily 35C15P	192
Daily 35C16	192
Daily 35C17	192
Daily 35C17P	192
Daily 35C18	192
Daily 35C18P	193
Daily 35C21	193
Daily 35C21P	193
Daily 35S10	193
Daily 35S11	193
Daily 35S11P	193
Daily 35S12	193
Daily 35S12P	193
Daily 35S13	193
Daily 35S13P	193
Daily 35S14	194
Daily 35S14P	194

MAKE-MODEL	PAGE
IVECO	
Daily 35S15	194
Daily 35S15P	194
Daily 35S15W	194
Daily 35S16	194
Daily 35S17	194
Daily 35S17P	194
Daily 35S17W	195
Daily 35S18	195
Daily 35S18P	195
Daily 35S18W	195
Daily 35S21	195
Daily 35S21P	195
Daily 40.10	195
Daily 40C11	195
Daily 40C14	195
Daily 40C15	195
Daily 40C15P	195
Daily 40C17	195
Daily 40C17P	196
Daily 40C18	196
Daily 40C18P	196
Daily 40C21	196
Daily 40C21P	196
Daily 45.10	196
Daily 45C15	196
Daily 45C15P	196
Daily 49.10	196
Daily 49.12	196
Daily 50C14	196
Daily 50C14P	196
Daily 50C15	197
Daily 50C15P	197
Daily 50C17	197
Daily 50C17P	197
Daily 50C18	197
Daily 50C21	197
Daily 50C21P	197
Daily 55S15W	198
Daily 55S17W	198
Daily 55S18W	198
Daily 59.12	198
Daily 60C14	198
Daily 60C15	198
Daily 60C15P	198
Daily 60C17	198
Daily 60C17P	198
Daily 60C21	198
Daily 65C13	198
Daily 65C14	198
Daily 65C14P	198
Daily 65C15	199
Daily 65C15P	199
Daily 65C17	199
Daily 65C17P	199
Daily 65C18	199
Daily 65C18P	199
Daily 65C21	199
Daily 65C21P	199
Daily 70C14	199
Daily 70C14P	199
Daily 70C15	200
Daily 70C15P	200
Daily 70C17	200
Daily 70C17P	200
Daily 70C18	200
Daily 70C18P	200
Daily 70C21	200
Daily 70C21P	200
Daily A40.10	200
Daily A45.10	200
Daily A45.12	200
Daily A49.10	201
JAGUAR	
F-Pace	201

MAKE-MODEL	PAGE
JAGUAR	
XE	201
XF	201
XF Sportbrake	201
XFR	201
XFRS	201
XFRS Sportbrake	201
XJ	201
XK	201
XKR	201
XKRS	202
JEEP	
Cherokee	202
Cherokee Classic	202
Commander	202
Compass	203
Grand Cherokee	203
Grand Cherokee L	207
Liberty	207
Patriot	207
Renegade	207
Wrangler	207
JEEP (BJC)	
Grand Cherokee	208
JEEP (GAC FCA)	
Cherokee	208
KIA	
Sorento	208
Sportage	209
Sportage R	210
Sportage Van	210
KIA (DYK)	
Sportage	211
LANCIA	
Thema	211
Y10 (Ypsilon)	211
LAND ROVER	
Defender	211
Defender 110	211
Defender 110 Pickup	211
Defender 130	211
Defender 130 Pickup	211
Defender 90	211
Defender 90 Pickup	212
Discovery	212
Discovery Sport	213
Freelander	213
Range Rover	214
Range Rover Evoque	215
Range Rover Sport	216
Range Rover Velar	217
LDV	
T60	218
LEXUS	
GS 250	218
GS 300	218
GS 300h	218
GS 400	218
GS 430	218
GS 450h	218
GS 460	218
GS F	218
GX 400	218
IS 200	218
IS 200d	218
IS 220d	218
IS 250	218
IS 300	218
IS 300h	218
ISF	218
LS 400	218
LS 430	218
LS 460	218
NX 200	219
NX 200t	219

MAKE-MODEL	PAGE
LEXUS	
NX 300	219
NX 300h	219
RC 300h	219
RCF	219
RX 200t	219
RX 300	219
RX 330	219
RX 350	219
RX 450h	219
SC 300	219
SC 400	219
SC 430	219
LINCOLN	
Aviator	220
MKC	220
MKS	220
MKT	220
MKX	220
MKZ	220
Navigator	220
MAXUS	
T60	220
MAZDA	
B-Serie	220
B-series	220
B1600	220
B2200	220
B2500	220
B2600	220
BT50	221
CX7	221
CX9	221
Drifter	221
Miata	221
MX5	221
Proceed	222
MERCEDES-BENZ	
1015, 1015 L	222
1016, 1016 L	222
1017, 1017 L	222
1018, 1018 L	222
1021, 1021 L	222
1022, 1022 L	222
1023, 1023 L	222
1023, 1023 L, 1024, 1024 L	222
1024, 1024 L	222
1214, 1214 L	222
1215, 1215 L	222
1215, 1215 L, 1216, 1216 L	222
1216, 1216 L	222
1217, 1217 L	222
1218, 1218 L	222
1221, 1221 L	222
1222, 1222 L	222
1223, 1223 L	222
1223, 1223 L, 1224, 1224 L	222
1224, 1224 L	222
1226, 1226 L	222
1228, 1228 L	222
1228, 1228 L, 1229, 1229 L	222
1229, 1229 L	222
200G	222
200GE	223
208D	223
210	223
210D	223
230G	223
230GE	223
240GD	223
250GD	223
280GE	223
290GD	223
300	223
300GD	223

MAKE-MODEL	PAGE
MERCEDES-BENZ	
300GE	224
308D	224
310D	224
350	224
350GD	224
408D	224
410	224
410D	224
500GE	224
512D Vario	224
712	225
712, 713	225
714, 714 L	225
715, 715 L, 716, 716 L	225
715,715 L	225
716, 716 L	225
717, 717 L	225
718, 718 L	225
721, 721 L	225
723, 723 L	225
810DT Vario	225
812	225
812, 813	225
812D Vario	225
813D/814D Vario	225
813DA/814DA Vario	225
814, 814 L	225
814D Vario	225
814DA Vario	225
815, 815 L	225
815, 815 L, 816, 816 L	225
815,815 L	225
815D Vario	225
815D/816D Vario	225
815DA Vario	225
815DA/816DA Vario	225
816, 816 L	225
816D Vario	225
817, 817 L	225
818, 818 L	226
818D Vario	226
821, 821 L	226
822, 822 L	226
823, 823 L	226
823, 823 L, 824, 824 L	226
824, 824 L	226
915, 915 L, 916, 916 L	226
916, 916 L	226
917, 917 L	226
918, 918 L	226
921, 921 L	226
922, 922 L	226
923, 923 L	226
923, 923 L, 924, 924 L	226
924, 924 L	226
A160	226
A180	226
A200	226
A220	226
A250	227
A35 AMG	227
A45 AMG	227
AMG GT 43	227
B Electric Drive	227
B160	227
B180	227
B200	227
B220	227
B250	228
C160	228
C180	228
C200	230
C220	234
C230	238

MAKE-MODEL	PAGE
MERCEDES-BENZ	
C240	239
C250	239
C270	241
C280	241
C300	242
C30CDi AMG	244
C32 AMG	244
C320	244
C350	245
C36 AMG	246
C400	246
C43 AMG	247
C450 AMG	247
C55 AMG	248
C63 AMG	248
CL420	249
CL500	249
CL55 AMG	249
CL600	249
CL63 AMG	249
CL65 AMG	249
CLA180	250
CLA200	250
CLA220	250
CLA250	251
CLA35 AMG	251
CLA45 AMG	251
CLC160	251
CLC180	251
CLC200	251
CLC220	251
CLC230	251
CLC250	251
CLC350	252
CLE200	252
CLE300	252
CLE450	252
CLK200	252
CLK220	253
CLK230	253
CLK240	253
CLK270	253
CLK280	253
CLK320	253
CLK350	254
CLK430	254
CLK500	254
CLK55 AMG	254
CLK63 AMG	254
CLS220	254
CLS250	255
CLS260	255
CLS280	255
CLS300	255
CLS320	255
CLS350	256
CLS400	257
CLS450	257
CLS500	257
CLS53 AMG	258
CLS55 AMG	258
CLS550	258
CLS63 AMG	258
E180	259
E200	259
E220	262
E230	266
E240	266
E250	267
E270	269
E280	269
E290	271
E300	271
E320	274

MAKE-MODEL	PAGE	MAKE-MODEL	PAGE	MAKE-MODEL	PAGE
MERCEDES-BENZ		**MERCEDES-BENZ**		**MERCEDES-BENZ**	
E350	276	GLS500	293	Sprinter 208D	307
E36 AMG	281	GLS580	293	Sprinter 209D	307
E400	281	GLS63 AMG	293	Sprinter 210D	307
E420	282	ML230	293	Sprinter 211D	308
E43 AMG	282	ML250	293	Sprinter 212D	309
E430	282	ML270	293	Sprinter 213D	309
E450	282	ML280	293	Sprinter 214	310
E50 AMG	282	ML300	293	Sprinter 214 NGT	310
E500	283	ML320	294	Sprinter 214D	310
E53 AMG	284	ML350	294	Sprinter 215D	311
E55	284	ML400	295	Sprinter 216	311
E55 AMG	284	ML420	295	Sprinter 216D	312
E550	284	ML430	295	Sprinter 217D	312
E60 AMG	284	ML450	295	Sprinter 218D	312
E63 AMG	284	ML500	295	Sprinter 219D	313
G270	285	ML55 AMG	295	Sprinter 224	313
G280	285	ML550	295	Sprinter 308D	313
G300	285	ML63 AMG	295	Sprinter 308E	314
G320	286	O 810 Vario	296	Sprinter 309D	314
G350	286	R280	296	Sprinter 310D	314
G36 AMG	286	R300	296	Sprinter 311D	315
G400	286	R320	296	Sprinter 312D	318
G500	286	R350	296	Sprinter 313D	318
G55 AMG	286	R500	297	Sprinter 314	320
G63 AMG	286	R63 AMG	297	Sprinter 314 NGT	320
G65 AMG	286	S280	297	Sprinter 314D	320
GL320	287	S300	297	Sprinter 315	321
GL350	287	S320	297	Sprinter 315D	321
GL400	287	S350	298	Sprinter 316	323
GL420	287	S400	299	Sprinter 316 LGT	323
GL450	287	S400 Maybach	299	Sprinter 316 NGT	323
GL500	287	S420	300	Sprinter 316D	324
GL550	288	S430	300	Sprinter 317D	325
GL63 AMG	288	S450	300	Sprinter 318D	325
GLA180	288	S450 Maybach	300	Sprinter 319D	326
GLA200	288	S500	301	Sprinter 324	328
GLA220	288	S500 Maybach	302	Sprinter 408D	328
GLA250	288	S55 AMG	302	Sprinter 410D	329
GLA35 AMG	288	S550	302	Sprinter 411D	329
GLA45 AMG	288	S560	302	Sprinter 412D	330
GLB200	288	S560 Maybach	302	Sprinter 413D	330
GLB220	288	S600	302	Sprinter 414	330
GLB250	288	S600 Maybach	303	Sprinter 414D	331
GLB35 AMG	288	S63 AMG	303	Sprinter 415D	331
GLC200	288	S65 AMG	303	Sprinter 416D	332
GLC220	289	S650 Maybach	303	Sprinter 417D	333
GLC250	289	S680 Maybach	303	Sprinter 418D	333
GLC260	289	SL280	303	Sprinter 419D	333
GLC300	289	SL300	304	Sprinter 424	334
GLC350	290	SL320	304	Sprinter 509D	334
GLC400	290	SL350	304	Sprinter 510D	334
GLC43 AMG	290	SL400	304	Sprinter 511D	335
GLC63 AMG	290	SL500	304	Sprinter 513D	336
GLE250	290	SL55 AMG	304	Sprinter 514D	337
GLE300	290	SL60 AMG	304	Sprinter 515D	338
GLE320	290	SL600	305	Sprinter 516	339
GLE350	290	SL63 AMG	305	Sprinter 516 NGT	339
GLE400	291	SL65 AMG	305	Sprinter 516D	339
GLE43 AMG	291	SL73 AMG	305	Sprinter 517D	340
GLE450 AMG	291	SLC180	305	Sprinter 518D	340
GLE500	291	SLC200	305	Sprinter 519D	341
GLE53 AMG	291	SLC250	305	Sprinter 524	342
GLE580	291	SLC260	305	Sprinter 616D	342
GLE63 AMG	291	SLC300	305	Sprinter Classic 311D	342
GLK200	292	SLC43 AMG	305	Sprinter Classic 313D	342
GLK220	292	SLK200	305	Sprinter Classic 411D	342
GLK250	292	SLK230	306	Sprinter Classic 413D	342
GLK280	292	SLK250	306	T-Model	342
GLK300	292	SLK280	306	T-Model E350	342
GLK320	292	SLK300	306	T-Model E400	342
GLK350	292	SLK32 AMG	306	V200	342
GLS350	293	SLK320	306	V220	342
GLS400	293	SLK350	306	V250	343
GLS450	293	SLK55 AMG	307	V260	343

MAKE-MODEL	PAGE
MERCEDES-BENZ	
Viano	343
Viano/V220	345
Vito 109	345
Vito 110	345
Vito 111	346
Vito 113	347
Vito 114	347
Vito 115	347
Vito 116	348
Vito 119	349
Vito 120	349
Vito 121	350
Vito 122	350
Vito 123	350
Vito 124	351
Vito 126	351
Vito E-Cell	351
Vito Mixto 111	351
Vito Mixto 115	351
MERCEDES-BENZ (BBDC)	
C180	351
C200	351
E200	351
E200L	351
E260L	351
E300L	351
E400L	351
GLC200L	351
GLC260L	351
GLC300L	351
GLK260	352
MERCEDES-BENZ (FJDA)	
V260	352
Vito	352
MERCURY	
Milan	352
Montego	352
Mountaineer	352
MINI	
Mini Clubman	352
Mini Countryman	352
Mini Paceman	353
MITSUBISHI	
3000 GT	353
Airtrek	353
ASX	353
Challenger	353
Chariot	354
Chariot Grandis	354
Colt	354
Eclipse Cross	354
G-Wagon	354
GTO	354
I.O	354
L200	354
L200 Triton/Hunter	355
L200/Triton	355
L200/Triton/Hunter	355
L200/Triton/L200 Sportero	355
L400	355
Lancer	356
Lancer Evolution	356
Montero	356
Montero I.O	357
Montero Sport	357
Montero/Pajero/Shogun	357
Outlander	357
Pajero	358
Pajero Classic/Shogun Classic/Montero Classic	359
Pajero I.O	359
Pajero Mini	359
Pajero Pinin	359
Pajero Pinin/IO/Shogun Pinin/Montero IO	359
Pajero Pinin/Pajero TR4	359

MAKE-MODEL	PAGE
MITSUBISHI	
Pajero Sport	359
Pajero Van	359
Pajero/Montero/Shogun	359
Pajero/Shogun/Pajero Canvas/Shogun Canvas	359
Pajero/Shogun/Pajero Wagon	359
RVR	359
Shogun	359
Shogun Pinin	360
Shogun Sport	360
Shogun Van	360
Space Gear	360
Space Runner	360
Space Wagon	360
Space Wagon/Nimbus	360
Sport Wagon	360
Strada	360
Strakar	360
Triton	360
MITSUBISHI (GAC)	
ASX	360
Outlander	361
NISSAN	
300ZX	361
Armada	361
Camiones	361
D21	361
Fairlady Z	361
Frontier	361
Interstar	361
Largo	361
Murano	361
Navara	361
Navara/Frontier/Skystar/Datsun	362
NP300	362
NP300 Frontier	362
NP300 Navara	362
NV400	362
Pathfinder	363
Pathfinder/Terrano	363
Pick Up	363
Pick Up (D22)	363
Pick Up (King Cab)	363
Pick Up/Datsun	364
Qashqai	364
Qashqai+2	364
Rogue	364
Serena	364
Silvia	364
Sunny	364
Sunny Estate/Wagon	364
Sunny/Pulsar	364
Terrano	365
Terrano (Pick Up)	365
Terrano II	365
Terrano II Van	365
Titan	365
Urvan	365
Vanette Cargo	365
Vanette Serena	365
X-Trail	365
Xterra	366
OLDSMOBILE	
Bravada	366
OPEL	
Antara	366
Insignia	366
Insignia Sports Tourer	366
Mokka	366
Mokka X	366
Movano	366
Omega	367
Omega B	368
PIAGGIO	
Porter	368

MAKE-MODEL	PAGE
PONTIAC	
Montana	368
Solstice	368
Torrent	368
PORSCHE	
911	368
911 GT2	369
911 Turbo	370
Cayenne	370
Macan	372
Panamera	373
RAM	
1500	373
1500 Crew Cab Pickup	374
1500 Extended Cab	374
1500 Standard Cab Pickup	374
2500	374
2500 Crew Cab Pickup	374
3500	374
3500 Extended Crew Cab Pickup	375
3500 Standard Cab Pickup	375
RENAULT	
Duster	375
Kangoo	375
Kangoo Express	375
Kangoo Rapid	375
Koleos	375
Master	375
Master T28	375
Master T30	376
Master T31	376
Master T33	376
Master T35	376
Master T38	377
Master T39	377
Master T45	377
Megane Scenic	378
Scenic RX4	378
SAAB	
9-7X	378
SATURN	
Outlook	378
Relay	378
Sky	378
Vue	378
SEAT	
Alhambra	378
Alhambra Van	379
Altea Freetrack	379
Altea XL	379
Ateca	379
Leon	380
Leon ST	380
Tarraco	380
SKODA	
Karoq	381
Karoq Scout	381
Kodiaq	381
Kodiaq Scout	381
Octavia	382
Octavia Scout	384
Superb	385
Yeti	386
SSANGYONG	
Actyon	386
Actyon Sports	387
Chairman CM600S	387
Korando	387
Korando Sports	387
Kyron	387
Rexton	387
Rexton II	387
Rexton W	387
Rodius	388
Turismo	388

MAKE-MODEL	PAGE
SUBARU	
Forester	388
Impreza	389
Legacy	389
Legacy Estate/Wagon	389
Legacy V	389
Outback	390
XV	390
SUZUKI	
Equator	390
Grand Escudo	390
Grand Vitara	390
Grand Vitara II	391
Grand Vitara II/Grand Escudo	391
SX4	391
SX4 S-Cross	391
Vitara	391
TOYOTA	
4 Runner	391
4 Runner (Nato)	391
4 Runner II/Surf/Hilux Surf	391
4 Runner/Surf/Hilux Surf	392
Allex	392
Allion	392
Alphard	392
Altezza	392
Altezza Gita	392
Aristo	392
Auris	392
Auris/Corolla/Blade	392
Avanza	392
Caldina	392
Celsior	392
Chaser	392
Corolla	392
Corolla Altis	392
Corolla Axio	392
Corolla Estate/Wagon	392
Corolla Fielder	392
Corolla RunX	393
Corolla Spacio	393
Corona	393
Crown	393
Crown Majesta	393
Dyna 150	393
Dyna 200	393
Dyna 300	393
Estima	393
Estima Emina	393
Estima Lucida	393
FJ Cruiser	393
Fortuner	393
FunCargo	394
Harrier	394
Hiace	394
Highlander	395
Highlander/Kluger	395
Hilux	395
Hilux Surf	398
Hilux/Tacoma	398
Innova	398
Innova/Kijanginnova/Zace	398
Ipsum	398
IST	398
Kluger	398
Land Cruiser	399
Land Cruiser 200	399
Land Cruiser 400	399
Land Cruiser 70	399
Land Cruiser 80	399
Land Cruiser 90	399
Land Cruiser Colorado	399
Land Cruiser Prado	399
Land Cruiser Van	400
Mark II	400

MAKE-MODEL	PAGE
TOYOTA	
Matrix	400
Noah	400
Opa	400
Platz	400
Premio	400
Previa	400
Previa (Nato)	400
Previa I/Estima/Previa	400
Probox	401
Rav 4	401
Rav 4L	402
Royal	402
Sienna	402
Soarer	402
Sprinter	402
Sprinter Carib	402
Sprinter Cielo	402
Supra	402
Tacoma	402
Tundra	403
Vanguard	403
Venza	403
Verossa	403
Vitz	403
Voxy	403
Will Cypha	403
Will VS	403
Wish	403
TOYOTA (FAW)	
Corolla	403
Land Cruiser Prado	403
TOYOTA (GAC)	
Highlander	403
VAUXHALL	
Mokka	403
Mokka X	403
Movano	403
Omega	404
Omega B	404
VOLVO	
360	404
940	404
940 Estate	405
940 Estate/Combi	405
940 Kombi	405
S40	405
S60	405
S70	405
S80	405
S90	405
V50	405
V60	406
V70	406
V70 XC	406
V90	406
V90 Cross Country	406
XC60	406
XC70	407
XC90	407
VOLVO ASIA	
XC40	407
XC60	407
VW	
Amarok	407
Arteon	408
Arteon Shooting Brake	408
Bora	409
Bora Estate/Variant	410
Caddy	410
Caddy Alltrack	411
Caddy California	411
Caddy California Maxi	412
Caddy Maxi	412
California	412

MAKE-MODEL	PAGE
VW	
Campmobile	413
Caravelle	413
CC	415
Crafter 28	415
Crafter 30	416
Crafter 32	419
Crafter 35	421
Crafter 46	425
Crafter 50	426
Golf	428
Golf Alltrack	430
Golf Estate/Variant	431
Golf Van (Hatchback)	432
Golf Van (Variant)	432
LT 28	432
LT 35	434
Multivan	434
New Beetle	435
Passat	435
Passat Alltrack	436
Passat CC	437
Passat Estate/Variant	437
Phaeton	438
Sharan	438
T-Roc	438
Taro	439
Teramont	439
Tiguan	439
Tiguan Allspace	441
Touareg	442
Transporter	443
Transporter Shuttle	449
Transporter/Caravelle	450
VW (SVW)	
Tiguan	450

	YEAR	TRANSM.	FITTING POSITION	BODY STYLE & DRIVE TYPE & ENGINE	REMARKS	PRODUCT	GSP Ref.
ACURA							
MDX							
3.5 (198 kw)	2003.09-2006.04	AT	Rear	SUV 4WD J35A5		Propshaft	PS900255
3.5 (215 kw)	2014.01-	AT	Rear	SUV 4WD J35Y5		Propshaft	PS901487
3.7 (220 kw)	2006.10-2013.04	AT	Rear	SUV 4WD J37A2		Propshaft	PS900100
3.7 (224 kw)	2006.10-2013.12	AT	Rear	SUV 4WD J37A1/J37A2		Propshaft	PS900100
3.7 (227 kw)	2006.10-	AT	Rear	SUV 4WD J37A1		Propshaft	PS900100
RDX							
2.3 (179 kw)	2007.01-2012.02	AT	Rear	SUV 4WD K23A1	Model year from:2007	Propshaft	PS901488
3.5 (204 kw)	2012.01-2015.08	AT	Rear	SUV 4WD J35Z2		Propshaft	PS900101
ZDX							
3.7 (224 kw)	2010.01-	AT	Rear	SUV 4WD J37A5		Propshaft	PS900100
3.7 (227 kw)	2011.11-	AT	Rear	SUV 4WD J37A5		Propshaft	PS900100
ALFA ROMEO							
75							
1.6 (81 kw)	1989.05-1992.02		-	Saloon RWD AR 61101	Transmission End	Joint,propshaft	602001
1.8 (85 kw)	1985.09-1989.06		-	Saloon RWD AR06202	Transmission End	Joint,propshaft	602001
1.8 (88 kw)	1988.09-1992.02		-	Saloon RWD AR06168/AR06202	Transmission End	Joint,propshaft	602001
1.8 (90 kw)	1989.08-1992.12		-	Saloon RWD AR61201	Transmission End	Joint,propshaft	602001
1.8 (95 kw)	1989.05-1992.02		-	Saloon RWD AR67101	Transmission End	Joint,propshaft	602001
2.0 (70 kw)	1985.05-1992.09		-	Saloon RWD VM80A	Transmission End	Joint,propshaft	602001
2.0 (94 kw)	1985.05-1988.04		-	Saloon RWD AR06212	Transmission End	Joint,propshaft	602001
2.0 (107 kw)	1987.04-1992.02		-	Saloon RWD AR06166	Transmission End	Joint,propshaft	602001
2.0 (109 kw)	1985.05-1992.02		-	Saloon RWD AR06224	Transmission End	Joint,propshaft	602001
90							
1.8 (85 kw)	1985.07-1988.12		-	Saloon RWD AR06202	Transmission End	Joint,propshaft	602001
1.8 (89 kw)	1984.09-1988.12		-	Saloon RWD AR06202	Transmission End	Joint,propshaft	602001
2.0 (94 kw)	1984.10-1987.07		-	Saloon RWD AR01713/AR06212	Transmission End	Joint,propshaft	602001
2.0 (97 kw)	1984.10-1987.07		-	Saloon RWD AR06210	Transmission End	Joint,propshaft	602001
2.5 (110 kw)	1984.11-1988.12		-	Saloon RWD AR01911	Transmission End	Joint,propshaft	602001
Alfetta							
1.6 (79 kw)	1975.01-1984.12		-	Saloon RWD AR01600	Transmission End	Joint,propshaft	602001
1.8 (85 kw)	1974.07-1982.04		-	Saloon RWD AR01608	Transmission End	Joint,propshaft	602001
1.8 (89 kw)	1979.10-1984.12		-	Saloon RWD AR01608	Transmission End	Joint,propshaft	602001
1.8 (90 kw)	1979.10-1984.12		-	Saloon RWD AR01678	Transmission End	Joint,propshaft	602001
2.0 (60 kw)	1979.10-1983.03		-	Saloon RWD VM4HT2	Transmission End	Joint,propshaft	602001
2.0 (89 kw)	1977.03-1980.02		-	Saloon RWD AR01623	Transmission End	Joint,propshaft	602001
2.0 (97 kw)	1978.09-1984.12		-	Saloon RWD AR01655/AR01674/AR01713	Transmission End	Joint,propshaft	602001
2.4 (70 kw)	1983.04-1984.12		-	Saloon RWD VM4HT24	Transmission End	Joint,propshaft	602001
Alfetta GT							
1.6 (79 kw)	1976.01-1982.09		-	Coupe RWD AR01600	Transmission End	Joint,propshaft	602001
1.8 (85 kw)	1974.06-1975.08		-	Coupe RWD AR01608	Transmission End	Joint,propshaft	602001
1.8 (89 kw)	1974.06-1976.12		-	Coupe RWD AR01608	Transmission End	Joint,propshaft	602001
2.0 (89 kw)	1978.07-1986.01		-	Coupe RWD AR01623	Transmission End	Joint,propshaft	602001
2.0 (96 kw)	1977.06-1984.12		-	Coupe RWD AR01655	Transmission End	Joint,propshaft	602001
Giulietta							
1.3 (66 kw)	1977.07-1983.05		-	Saloon RWD AR01644	Transmission End	Joint,propshaft	602001
1.6 (79 kw)	1977.10-1985.04		-	Saloon RWD AR01600	Transmission End	Joint,propshaft	602001
1.8 (90 kw)	1979.04-1985.04		-	Saloon RWD AR01608	Transmission End	Joint,propshaft	602001
1.8 (110 kw)	1983.04-1986.06		-	Saloon RWD AR01354	Transmission End	Joint,propshaft	602001
2.0 (61 kw)	1983.01-1985.12		-	Saloon RWD VM4HT2	Transmission End	Joint,propshaft	602001
2.0 (96 kw)	1980.06-1986.05		-	Saloon RWD AR01655	Transmission End	Joint,propshaft	602001
2.0 (125 kw)	1983.04-1985.06		-	Saloon RWD AR01699	Transmission End	Joint,propshaft	602001
Stelvio							
2.0 (148 kw)	2016.12-	8AT	Front	SUV 4WD 55273835		Propshaft	PS901909
2.2 (132 kw)	2016.12-	8AT	Front	SUV 4WD 55271838		Propshaft	PS901909
2.2 (140 kw)	2018.08-	8AT	Front	SUV 4WD 46335692/55268818/55284529		Propshaft	PS901909
2.2 (154 kw)	2016.12-	8AT	Front	SUV 4WD 46346359/55271838/55284529		Propshaft	PS901909
AUDI							
A3							
1.8 (92 kw)	1996.09-2006.09		Front	Hatchback FWD AGN/APG		Flexible Coupling	538507
1.8 (110 kw)	1996.09-2006.09		Front	Hatchback FWD AGU/AQA/ARZ/AUM		Flexible Coupling	538507
1.8 (132 kw)	1998.11-2006.09		Front	Hatchback FWD AJQ/APP/ARY/AUQ		Flexible Coupling	538507
A3 Cabrio Quattro							
1.8 (132 kw)	2014.03-2016.07		Front	Cabriolet 4WD CJSB		Flexible Coupling	537626
	2014.03-2016.07		Rear	Cabriolet 4WD CJSB		Flexible Coupling	533882

	YEAR	TRANSM.	FITTING POSITION	BODY STYLE & DRIVE TYPE & ENGINE	REMARKS	PRODUCT	GSP Ref.
AUDI							
A3 Cabrio Quattro							
1.8 (132 kw)	2014.03-2016.07		Front	Cabriolet 4WD CJSB		Flexible Coupling Kit	537626S
	2014.03-2016.07		Rear	Cabriolet 4WD CJSB		Flexible Coupling Kit	533882S
2.0 (110 kw)	2014.03-2020.10		Front	Cabriolet 4WD CRLB/DCYA		Flexible Coupling	537626
	2014.03-2020.10		Rear	Cabriolet 4WD CRLB/DCYA		Flexible Coupling	533882
	2014.03-2020.10		Front	Cabriolet 4WD CRLB/DCYA		Flexible Coupling Kit	537626S
	2014.03-2020.10		Rear	Cabriolet 4WD CRLB/DCYA		Flexible Coupling Kit	533882S
2.0 (135 kw)	2014.05-2020.10		Front	Cabriolet 4WD CUNA/DGCA		Flexible Coupling	537626
	2014.05-2020.10		Rear	Cabriolet 4WD CUNA/DGCA		Flexible Coupling	533882
	2014.05-2020.10		Front	Cabriolet 4WD CUNA/DGCA		Flexible Coupling Kit	537626S
	2014.05-2020.10		Rear	Cabriolet 4WD CUNA/DGCA		Flexible Coupling Kit	533882S
2.0 (140 kw)	2016.05-2020.10	AT	Rear	Cabriolet 4WD CZPB/DKZA	Model year from:2017;0b2 wheelbase	Propshaft	PS900584
	2016.05-2020.10	AT	Rear	Cabriolet 4WD CZPB/DKZA	0b1 wheelbase	Propshaft	PS900585
	2016.05-2020.10		Centre	Cabriolet 4WD CZPB/DKZA		Center Bearing Support	539930
	2016.05-2020.10		Front	Cabriolet 4WD CZPB/DKZA		Flexible Coupling	537626
	2016.05-2020.10		Rear	Cabriolet 4WD CZPB/DKZA		Flexible Coupling	533882
	2016.05-2020.10		Front	Cabriolet 4WD CZPB/DKZA		Flexible Coupling Kit	537626S
	2016.05-2020.10		Rear	Cabriolet 4WD CZPB/DKZA		Flexible Coupling Kit	533882S
2.0 (162 kw)	2016.08-2020.10	AT	Rear	Cabriolet 4WD CNTC	Model year from:2017;0b2 wheelbase	Propshaft	PS900584
	2016.08-2020.10	AT	Rear	Cabriolet 4WD CNTC	Model year from:2015,0b1 wheelbase	Propshaft	PS900585
	2016.08-2020.10		Centre	Cabriolet 4WD CNTC		Center Bearing Support	539930
	2016.08-2020.10		Front	Cabriolet 4WD CNTC		Flexible Coupling	537626
	2016.08-2020.10		Rear	Cabriolet 4WD CNTC		Flexible Coupling	533882
	2016.08-2020.10		Front	Cabriolet 4WD CNTC		Flexible Coupling Kit	537626S
	2016.08-2020.10		Rear	Cabriolet 4WD CNTC		Flexible Coupling Kit	533882S
A3 Quattro							
1.6 (81 kw)	2015.05-2016.08		Front	Saloon 4WD CXXB		Flexible Coupling	537626
	2015.05-2016.08		Rear	Saloon 4WD CXXB		Flexible Coupling	533882
	2015.05-2016.08		Front	Saloon 4WD CXXB		Flexible Coupling Kit	537626S
	2015.05-2016.08		Rear	Saloon 4WD CXXB		Flexible Coupling Kit	533882S
1.8 (110 kw)	1997.08-2003.06		Front	Hatchback 4WD AGU/AQA/ARX	5MT,6MT	Flexible Coupling	537626
	1997.08-2003.06		Front	Hatchback 4WD AGU/AQA/ARX	5MT	Flexible Coupling	538507
	1997.08-2003.06		Rear	Hatchback 4WD AGU/AQA/ARX		Flexible Coupling	538518
	1997.08-2003.06		Front	Hatchback 4WD AGU/AQA/ARX	5MT,6MT	Flexible Coupling Kit	537626S
	1997.08-2003.06		Front	Hatchback 4WD AGU/AQA/ARX	5MT	Flexible Coupling Kit	538508S
1.8 (118 kw)	2008.07-2012.08		Centre	Hatchback 4WD CDAA		Center Bearing Support Kit	539917S
	2008.07-2012.08		Front	Hatchback 4WD CDAA		Flexible Coupling Kit	537626S
1.8 (132 kw)	1998.11-2003.06		Front	Hatchback 4WD AJQ/ARY	5MT,6MT	Flexible Coupling	537626
	1998.11-2003.06		Front	Hatchback 4WD AJQ/ARY	5MT	Flexible Coupling	538507
	1998.11-2003.06		Rear	Hatchback 4WD AJQ/ARY		Flexible Coupling	538518
	1998.11-2003.06		Front	Hatchback 4WD AJQ/ARY	5MT,6MT	Flexible Coupling Kit	537626S
	1998.11-2003.06		Front	Hatchback 4WD AJQ/ARY	5MT	Flexible Coupling Kit	538508S
	2012.08-2016.08		Centre	Hatchback 4WD CJSB		Center Bearing Support	538658
	2012.08-2016.08		Front	Hatchback 4WD CJSB		Flexible Coupling	537626
	2012.08-2016.08		Rear	Hatchback 4WD CJSB		Flexible Coupling	533882
	2012.08-2016.08		Front	Hatchback 4WD CJSB		Flexible Coupling Kit	537626S
	2012.08-2016.08		Rear	Hatchback 4WD CJSB		Flexible Coupling Kit	533882S
	2013.09-2016.08		Front	Saloon 4WD CJSB		Flexible Coupling	537626
	2013.09-2016.08		Rear	Saloon 4WD CJSB		Flexible Coupling	533882
	2013.09-2016.08		Front	Saloon 4WD CJSB		Flexible Coupling Kit	537626S
	2013.09-2016.08		Rear	Saloon 4WD CJSB		Flexible Coupling Kit	533882S
1.9 (96 kw)	2000.05-2003.06		Front	Hatchback 4WD ASZ	5MT,6MT	Flexible Coupling	537626
	2000.05-2003.06		Front	Hatchback 4WD ASZ	5MT	Flexible Coupling	538507
	2000.05-2003.06		Rear	Hatchback 4WD ASZ		Flexible Coupling	538518
	2000.05-2003.06		Front	Hatchback 4WD ASZ	5MT,6MT	Flexible Coupling Kit	537626S
	2000.05-2003.06		Front	Hatchback 4WD ASZ	5MT	Flexible Coupling Kit	538508S
2.0 (100 kw)	2003.06-2008.06		Centre	Hatchback 4WD AZV		Center Bearing Support Kit	539917S
	2003.06-2008.06		Front	Hatchback 4WD AZV		Flexible Coupling	537626
	2003.06-2008.06		Rear	Hatchback 4WD AZV		Flexible Coupling	533882
	2003.06-2008.06		Front	Hatchback 4WD AZV		Flexible Coupling Kit	537626S
	2003.06-2008.06		Rear	Hatchback 4WD AZV		Flexible Coupling Kit	533882S
2.0 (103 kw)	2004.08-2012.08		Centre	Hatchback 4WD BKD/CBAB/CFFB		Center Bearing Support Kit	539917S
	2004.08-2012.08		Front	Hatchback 4WD BKD/CBAB/CFFB		Flexible Coupling	537626
	2004.08-2012.08		Rear	Hatchback 4WD BKD/CBAB/CFFB		Flexible Coupling	533882
	2004.08-2012.08		Front	Hatchback 4WD BKD/CBAB/CFFB		Flexible Coupling Kit	537626S

	YEAR	TRANSM.	FITTING POSITION	BODY STYLE & DRIVE TYPE & ENGINE	REMARKS	PRODUCT	GSP Ref.
AUDI							
A3 Quattro							
2.0 (103 kw)	2004.08-2012.08		Rear	Hatchback 4WD BKD/CBAB/CFFB		Flexible Coupling Kit	533882S
	2006.01-2007.05		Centre	Hatchback 4WD BMM		Center Bearing Support Kit	539917S
	2006.01-2007.05		Rear	Hatchback 4WD BMM		Flexible Coupling	533882
	2006.01-2007.05		Front	Hatchback 4WD BMM		Flexible Coupling Kit	537626S
	2006.01-2007.05		Rear	Hatchback 4WD BMM		Flexible Coupling Kit	533882S
2.0 (110 kw)	2012.10-2017.12		Centre	Hatchback 4WD CRBC/CRLB/DCYA		Center Bearing Support	538658
	2012.10-2017.12		Front	Hatchback 4WD CRBC/CRLB/DCYA		Flexible Coupling	537626
	2012.10-2017.12		Rear	Hatchback 4WD CRBC/CRLB/DCYA		Flexible Coupling	533882
	2012.10-2017.12		Front	Hatchback 4WD CRBC/CRLB/DCYA		Flexible Coupling Kit	537626S
	2012.10-2017.12		Rear	Hatchback 4WD CRBC/CRLB/DCYA		Flexible Coupling Kit	533882S
	2013.10-2020.10		Front	Saloon 4WD CRBC/CRLB/DCYA		Flexible Coupling	537626
	2013.10-2020.10		Rear	Saloon 4WD CRBC/CRLB/DCYA		Flexible Coupling	533882
	2013.10-2020.10		Front	Saloon 4WD CRBC/CRLB/DCYA		Flexible Coupling Kit	537626S
	2013.10-2020.10		Rear	Saloon 4WD CRBC/CRLB/DCYA		Flexible Coupling Kit	533882S
2.0 (125 kw)	2006.02-2012.08		Centre	Hatchback 4WD BMN/CBBB/CFGB		Center Bearing Support Kit	539917S
	2006.02-2012.08		Front	Hatchback 4WD BMN/CBBB/CFGB		Flexible Coupling	537626
	2006.02-2012.08		Rear	Hatchback 4WD BMN/CBBB/CFGB		Flexible Coupling	533882
	2006.02-2012.08		Front	Hatchback 4WD BMN/CBBB/CFGB		Flexible Coupling Kit	537626S
	2006.02-2012.08		Rear	Hatchback 4WD BMN/CBBB/CFGB		Flexible Coupling Kit	533882S
2.0 (135 kw)	2013.05-2017.12		Centre	Hatchback 4WD CUNA/DGCA		Center Bearing Support	538658
	2013.05-2017.12		Front	Hatchback 4WD CUNA/DGCA		Flexible Coupling	537626
	2013.05-2017.12		Rear	Hatchback 4WD CUNA/DGCA		Flexible Coupling	533882
	2013.05-2017.12		Front	Hatchback 4WD CUNA/DGCA		Flexible Coupling Kit	537626S
	2013.05-2017.12		Rear	Hatchback 4WD CUNA/DGCA		Flexible Coupling Kit	533882S
	2014.05-2019.07		Front	Saloon 4WD CUNA/DGCA/DJGA		Flexible Coupling	537626
	2014.05-2019.07		Rear	Saloon 4WD CUNA/DGCA/DJGA		Flexible Coupling	533882
	2014.05-2019.07		Front	Saloon 4WD CUNA/DGCA/DJGA		Flexible Coupling Kit	537626S
	2014.05-2019.07		Rear	Saloon 4WD CUNA/DGCA/DJGA		Flexible Coupling Kit	533882S
2.0 (140 kw)	2016.05-2017.12	AT	Rear	Hatchback 4WD CZPB	0b1 wheelbase	Propshaft	PS900585
	2016.05-2017.12		Centre	Hatchback 4WD CZPB		Center Bearing Support	539930
	2016.05-2017.12		Front	Hatchback 4WD CZPB		Flexible Coupling	537626
	2016.05-2017.12		Rear	Hatchback 4WD CZPB		Flexible Coupling	533882
	2016.05-2017.12		Front	Hatchback 4WD CZPB		Flexible Coupling Kit	537626S
	2016.05-2017.12		Rear	Hatchback 4WD CZPB		Flexible Coupling Kit	533882S
	2016.05-2020.10		Front	Saloon 4WD CZPB/DKZA		Flexible Coupling	537626
	2016.05-2020.10		Rear	Saloon 4WD CZPB/DKZA		Flexible Coupling	533882
	2016.05-2020.10		Front	Saloon 4WD CZPB/DKZA		Flexible Coupling Kit	537626S
	2016.05-2020.10		Rear	Saloon 4WD CZPB/DKZA		Flexible Coupling Kit	533882S
2.0 (147 kw)	2004.09-2012.08		Centre	Hatchback 4WD AXX/BWA/CCZA		Center Bearing Support Kit	539917S
	2004.09-2012.08		Front	Hatchback 4WD AXX/BWA/CCZA		Flexible Coupling	537626
	2004.09-2012.08		Rear	Hatchback 4WD AXX/BWA/CCZA		Flexible Coupling	533882
	2004.09-2012.08		Front	Hatchback 4WD AXX/BWA/CCZA		Flexible Coupling Kit	537626S
	2004.09-2012.08		Rear	Hatchback 4WD AXX/BWA/CCZA		Flexible Coupling Kit	533882S
3.2 (184 kw)	2003.07-2009.05	AT/MT	Rear	Hatchback 4WD BDB/BMJ/BUB		Propshaft	PS900102
	2003.07-2009.05		Centre	Hatchback 4WD BDB/BMJ/BUB		Center Bearing Support Kit	539917S
	2003.07-2009.05		Front	Hatchback 4WD BDB/BMJ/BUB		Flexible Coupling	537626
	2003.07-2009.05		Rear	Hatchback 4WD BDB/BMJ/BUB		Flexible Coupling	533882
	2003.07-2009.05		Front	Hatchback 4WD BDB/BMJ/BUB		Flexible Coupling Kit	537626S
	2003.07-2009.05		Rear	Hatchback 4WD BDB/BMJ/BUB		Flexible Coupling Kit	533882S
A3 Sportback							
1.4 (150 kw)	2014.05-2020.10	AT	Rear	Hatchback FWD CUKB/CXUA/DGEA	Model year from:2017,Model year to:2018;0b1 wheelbase	Propshaft	PS900585
	2014.05-2020.10		Centre	Hatchback FWD CUKB/CXUA/DGEA		Center Bearing Support	539930
A3 Sportback Quattro							
1.6 (81 kw)	2015.05-2016.08		Front	Hatchback 4WD CXXB		Flexible Coupling	537626
	2015.05-2016.08		Rear	Hatchback 4WD CXXB		Flexible Coupling	533882
	2015.05-2016.08		Front	Hatchback 4WD CXXB		Flexible Coupling Kit	537626S
	2015.05-2016.08		Rear	Hatchback 4WD CXXB		Flexible Coupling Kit	533882S
1.8 (118 kw)	2008.07-2013.03		Centre	Hatchback 4WD CDAA		Center Bearing Support Kit	539917S
	2008.07-2013.03		Front	Hatchback 4WD CDAA		Flexible Coupling Kit	537626S
1.8 (132 kw)	2013.05-2016.08		Front	Hatchback 4WD CJSB		Flexible Coupling	537626
	2013.05-2016.08		Rear	Hatchback 4WD CJSB		Flexible Coupling	533882
	2013.05-2016.08		Front	Hatchback 4WD CJSB		Flexible Coupling Kit	537626S
	2013.05-2016.08		Rear	Hatchback 4WD CJSB		Flexible Coupling Kit	533882S

	YEAR	TRANSM.	FITTING POSITION	BODY STYLE & DRIVE TYPE & ENGINE	REMARKS	PRODUCT	GSP Ref.
AUDI							
A3 Sportback Quattro							
2.0 (103 kw)	2005.11-2013.03		Centre	Hatchback 4WD BKD/CBAB/CFFB		Center Bearing Support Kit	539917S
	2005.11-2013.03		Front	Hatchback 4WD BKD/CBAB/CFFB		Flexible Coupling	537626
	2005.11-2013.03		Rear	Hatchback 4WD BKD/CBAB/CFFB		Flexible Coupling	533882
	2005.11-2013.03		Front	Hatchback 4WD BKD/CBAB/CFFB		Flexible Coupling Kit	537626S
	2005.11-2013.03		Rear	Hatchback 4WD BKD/CBAB/CFFB		Flexible Coupling Kit	533882S
	2007.06-2008.06		Centre	Hatchback 4WD BMM		Center Bearing Support Kit	539917S
	2007.06-2008.06		Front	Hatchback 4WD BMM		Flexible Coupling	537626
	2007.06-2008.06		Rear	Hatchback 4WD BMM		Flexible Coupling	533882
	2007.06-2008.06		Front	Hatchback 4WD BMM		Flexible Coupling Kit	537626S
	2007.06-2008.06		Rear	Hatchback 4WD BMM		Flexible Coupling Kit	533882S
2.0 (110 kw)	2013.02-2020.10		Front	Hatchback 4WD CRBC/CRLB/DCYA		Flexible Coupling	537626
	2013.02-2020.10		Rear	Hatchback 4WD CRBC/CRLB/DCYA		Flexible Coupling	533882
	2013.02-2020.10		Front	Hatchback 4WD CRBC/CRLB/DCYA		Flexible Coupling Kit	537626S
	2013.02-2020.10		Rear	Hatchback 4WD CRBC/CRLB/DCYA		Flexible Coupling Kit	533882S
2.0 (125 kw)	2006.02-2013.03		Centre	Hatchback 4WD BMN/CBBB/CFGB		Center Bearing Support Kit	539917S
	2006.02-2013.03		Front	Hatchback 4WD BMN/CBBB/CFGB		Flexible Coupling	537626
	2006.02-2013.03		Rear	Hatchback 4WD BMN/CBBB/CFGB		Flexible Coupling	533882
	2006.02-2013.03		Front	Hatchback 4WD BMN/CBBB/CFGB		Flexible Coupling Kit	537626S
	2006.02-2013.03		Rear	Hatchback 4WD BMN/CBBB/CFGB		Flexible Coupling Kit	533882S
2.0 (135 kw)	2013.05-2020.10		Front	Hatchback 4WD CUNA/DGCA/DJGA		Flexible Coupling	537626
	2013.05-2020.10		Rear	Hatchback 4WD CUNA/DGCA/DJGA		Flexible Coupling	533882
	2013.05-2020.10		Front	Hatchback 4WD CUNA/DGCA/DJGA		Flexible Coupling Kit	537626S
	2013.05-2020.10		Rear	Hatchback 4WD CUNA/DGCA/DJGA		Flexible Coupling Kit	533882S
2.0 (140 kw)	2016.05-2020.10		Front	Hatchback 4WD CZPB/DKZA		Flexible Coupling	537626
	2016.05-2020.10		Rear	Hatchback 4WD CZPB/DKZA		Flexible Coupling	533882
	2016.05-2020.10		Front	Hatchback 4WD CZPB/DKZA		Flexible Coupling Kit	537626S
	2016.05-2020.10		Rear	Hatchback 4WD CZPB/DKZA		Flexible Coupling Kit	533882S
2.0 (147 kw)	2004.06-2013.03		Centre	Hatchback 4WD AXX/BPY/BWA/CCZA		Center Bearing Support Kit	539917S
	2004.06-2013.03		Front	Hatchback 4WD AXX/BPY/BWA/CCZA		Flexible Coupling	537626
	2004.06-2013.03		Rear	Hatchback 4WD AXX/BPY/BWA/CCZA		Flexible Coupling	533882
	2004.06-2013.03		Front	Hatchback 4WD AXX/BPY/BWA/CCZA		Flexible Coupling Kit	537626S
	2004.06-2013.03		Rear	Hatchback 4WD AXX/BPY/BWA/CCZA		Flexible Coupling Kit	533882S
3.2 (184 kw)	2003.07-2009.05	AT/MT	Rear	Hatchback 4WD BDB/BMJ/BUB		Propshaft	PS900102
	2003.07-2009.05		Centre	Hatchback 4WD BDB/BMJ/BUB		Center Bearing Support Kit	539917S
	2003.07-2009.05		Front	Hatchback 4WD BDB/BMJ/BUB		Flexible Coupling	537626
	2003.07-2009.05		Rear	Hatchback 4WD BDB/BMJ/BUB		Flexible Coupling	533882
	2003.07-2009.05		Front	Hatchback 4WD BDB/BMJ/BUB		Flexible Coupling Kit	537626S
	2003.07-2009.05		Rear	Hatchback 4WD BDB/BMJ/BUB		Flexible Coupling Kit	533882S
A3/S3 Limousine quattro							
2.0 (162 kw)	2013.11-	AT	Rear	Saloon 4WD CNTC	Model year from:2017,Model year to:2020;0b2 wheelbase	Propshaft	PS900584
	2013.11-	AT	Rear	Saloon 4WD CNTC	Model year from:2017,Model year to:2020;0b1 wheelbase	Propshaft	PS900585
	2013.11-		Centre	Saloon 4WD CNTC		Center Bearing Support	539930
	2013.11-		Front	Saloon 4WD CNTC		Flexible Coupling	537626
	2013.11-		Rear	Saloon 4WD CNTC		Flexible Coupling	533882
	2013.11-		Front	Saloon 4WD CNTC		Flexible Coupling Kit	537626S
	2013.11-		Rear	Saloon 4WD CNTC		Flexible Coupling Kit	533882S
A4 Allroad Quattro							
2.0 (100 kw)	2016.11-2018.07	7AT	Rear	Estate 4WD DEUB	Rear differential with uncoupling feature	Propshaft	PS901874
2.0 (105 kw)	2009.09-2016.05	7AT	Rear	Estate 4WD CAGA/CJCA	Date from:2010.06	Propshaft	PS900103
	2009.09-2016.05	7AT	-	Estate 4WD CAGA/CJCA	Date from:2010.06	Joint,propshaft	602469
2.0 (110 kw)	2016.11-2019.10	7AT	Rear	Estate 4WD DEUA	Rear differential with uncoupling feature	Propshaft	PS901874
2.0 (120 kw)	2009.04-2016.05	7AT	Rear	Estate 4WD CAHB/CGLD/CNHC	Date from:2010.06	Propshaft	PS900103
	2009.04-2016.05	7AT	-	Estate 4WD CAHB/CGLD/CNHC	Date from:2010.06	Joint,propshaft	602469
	2016.05-2019.10	7AT	Rear	Estate 4WD DETB	Rear differential with uncoupling feature	Propshaft	PS901874
2.0 (130 kw)	2011.11-2016.05	7AT	Rear	Estate 4WD CGLC		Propshaft	PS900103
	2011.11-2016.05	7AT	-	Estate 4WD CGLC		Joint,propshaft	602469
2.0 (140 kw)	2013.09-2016.05	7AT	Rear	Estate 4WD CNHA		Propshaft	PS900103
	2013.09-2016.05	7AT	-	Estate 4WD CNHA		Joint,propshaft	602469
	2016.01-	7AT	Rear	Estate 4WD DESA/DETA/DFVA	Rear differential with uncoupling feature	Propshaft	PS901874
2.0 (150 kw)	2020.09-	7AT	Rear	Estate 4WD DTPA	Rear differential with uncoupling feature	Propshaft	PS901874
2.0 (155 kw)	2009.04-2016.05	7AT	Rear	Estate 4WD CDNC/CPMA	Date from:2010.06	Propshaft	PS900103
	2009.04-2016.05	7AT	-	Estate 4WD CDNC/CPMA	Date from:2010.06	Joint,propshaft	602469
2.0 (165 kw)	2013.05-2016.05	7AT	Rear	Estate 4WD CNCD		Propshaft	PS900103
	2013.05-2016.05	7AT	-	Estate 4WD CNCD		Joint,propshaft	602469

	YEAR	TRANSM.	FITTING POSITION	BODY STYLE & DRIVE TYPE & ENGINE	REMARKS	PRODUCT	GSP Ref.
AUDI							
A4 Allroad Quattro							
2.0 (180 kw)	2018.07-	7AT	Rear	Estate 4WD DKNA	Rear differential with uncoupling feature	Propshaft	PS901874
2.0 (183 kw)	2016.05-2019.10	7AT	Rear	Estate 4WD CYRC	Rear differential with uncoupling feature	Propshaft	PS901874
2.0 (185 kw)	2016.01-2019.10	7AT	Rear	Estate 4WD CYMC/CYRB	Rear differential with uncoupling feature	Propshaft	PS901874
	2018.11-2019.10	7AT	Rear	Estate 4WD DDWA	Rear differential with uncoupling feature	Propshaft	PS901874
2.0 (195 kw)	2020.08-	7AT	Rear	Estate 4WD DMTA	Rear differential with uncoupling feature	Propshaft	PS901874
3.0 (176 kw)	2009.04-2012.01	6MT	Rear	Estate 4WD CCWA	Date from:2010.03	Propshaft	PS901825
	2009.04-2012.01	7AT	Rear	Estate 4WD CCWA	Date from:2010.06	Propshaft	PS900103
	2009.04-2012.01	7AT	-	Estate 4WD CCWA	Date from:2010.06	Joint,propshaft	602469
3.0 (180 kw)	2012.01-2016.05	7AT	Rear	Estate 4WD CDUC/CKVB/CKVC		Propshaft	PS900103
	2012.01-2016.05	7AT	-	Estate 4WD CDUC/CKVB/CKVC		Joint,propshaft	602469
3.0 (200 kw)	2016.01-2018.08	8AT	Rear	Estate 4WD CRTC		Propshaft	PS901720
A4 Cabrio Quattro							
1.8 (120 kw)	2003.04-2005.12	MT	Rear	Cabriolet 4WD BFB		Propshaft	PS901421
1.8 (127 kw)	2003.09-2004.12	MT	Rear	Convertible 4WD AMB		Propshaft	PS901421
3.0 (162 kw)	2003.04-2005.12	MT	Rear	Cabriolet 4WD ASN		Propshaft	PS901421
A4 Quattro							
1.8 (92 kw)	1994.11-2000.10		Front	Saloon 4WD ADR/APT/ARG		Flexible Coupling	537626
1.8 (110 kw)	1995.02-2000.10		Front	Saloon 4WD AEB/ANB/APU/ARK/AWT		Flexible Coupling	537626
	2000.10-2002.08		Front	Saloon 4WD AVJ		Flexible Coupling	537626
1.8 (120 kw)	2002.08-2004.10	AT	Rear	Estate 4WD BFB		Propshaft	PS901421
	2002.08-2004.10	AT	Rear	Saloon 4WD BFB		Propshaft	PS901421
	2002.08-2004.10		Front	Saloon 4WD BFB		Flexible Coupling	537626
1.8 (125 kw)	2001.07-2004.12	AT	Rear	Saloon 4WD AMB		Propshaft	PS901421
	2001.09-2005.12	AT	Rear	Estate 4WD AMB		Propshaft	PS901421
1.8 (132 kw)	1997.10-2000.10		Front	Saloon 4WD AJL		Flexible Coupling	537626
1.8 (140 kw)	2002.11-2004.10	AT	Rear	Saloon 4WD BEX		Propshaft	PS901421
	2002.11-2004.10		Front	Saloon 4WD BEX		Flexible Coupling	537626
	2002.11-2004.12	AT	Rear	Estate 4WD BEX		Propshaft	PS901421
1.9 (81 kw)	1996.07-2000.01		Front	Saloon 4WD AFN/AVG		Flexible Coupling	537626
1.9 (85 kw)	1998.12-2000.10		Front	Saloon 4WD AJM/ATJ		Flexible Coupling	537626
1.9 (96 kw)	2001.04-2004.10		Front	Saloon 4WD AVF		Flexible Coupling	537626
2.0 (110 kw)	2016.09-2019.10	7AT	Rear	Estate 4WD DEUA	Rear differential with uncoupling feature	Propshaft	PS901874
	2016.09-2019.11	7AT	Rear	Saloon 4WD DEUA	Rear differential with uncoupling feature	Propshaft	PS901874
2.0 (120 kw)	2016.09-2018.09	7AT	Rear	Estate 4WD DETB	Rear differential with uncoupling feature	Propshaft	PS901874
	2016.09-2019.11	7AT	Rear	Saloon 4WD DETB	Rear differential with uncoupling feature	Propshaft	PS901874
2.0 (130 kw)	2011.11-2015.12	7AT	Rear	Estate 4WD CGLC		Propshaft	PS900103
	2011.11-2015.12	7AT	Rear	Saloon 4WD CGLC		Propshaft	PS900103
	2011.11-2015.12	7AT	-	Estate 4WD CGLC		Joint,propshaft	602469
	2011.11-2015.12	7AT	-	Saloon 4WD CGLC		Joint,propshaft	602469
2.0 (140 kw)	2013.09-2015.12	7AT	Rear	Estate 4WD CNHA		Propshaft	PS900103
	2013.09-2015.12	7AT	Rear	Saloon 4WD CNHA		Propshaft	PS900103
	2013.09-2015.12	7AT	-	Estate 4WD CNHA		Joint,propshaft	602469
	2013.09-2015.12	7AT	-	Saloon 4WD CNHA		Joint,propshaft	602469
	2015.09-	7AT	Rear	Saloon 4WD DESA/DETA/DFVA	Rear differential with uncoupling feature	Propshaft	PS901874
	2015.10-2020.09	7AT	Rear	Estate 4WD DESA/DETA/DFVA	Rear differential with uncoupling feature	Propshaft	PS901874
2.0 (147 kw)	2004.11-2008.06	AT	Rear	Saloon 4WD BGB/BWE/BWT		Propshaft	PS901421
	2004.11-2008.12	AT	Rear	Estate 4WD BGB/BWE/BWT		Propshaft	PS901421
2.0 (150 kw)	2020.05-	7AT	Rear	Saloon 4WD DTPA	Rear differential with uncoupling feature	Propshaft	PS901874
	2020.05-	7AT	Rear	Estate 4WD DTPA	Rear differential with uncoupling feature	Propshaft	PS901874
	2020.06-	7AT	Rear	Estate 4WD DMSA	Rear differential with uncoupling feature	Propshaft	PS901874
	2020.06-	7AT	Rear	Saloon 4WD DMSA	Rear differential with uncoupling feature	Propshaft	PS901874
2.0 (155 kw)	2008.06-2015.12	7AT	Rear	Estate 4WD CDNC	Date from:2010.06	Propshaft	PS900103
	2008.06-2015.12	7AT	Rear	Saloon 4WD CAEB/CDNC/CPMA	Date from:2010.06	Propshaft	PS900103
	2008.06-2015.12	7AT	-	Estate 4WD CDNC	Date from:2010.06	Joint,propshaft	602469
	2008.06-2015.12	7AT	-	Saloon 4WD CAEB/CDNC/CPMA	Date from:2010.06	Joint,propshaft	602469
2.0 (162 kw)	2005.04-2008.06	AT	Rear	Saloon 4WD BUL		Propshaft	PS901421
	2006.02-2008.06	AT	Rear	Estate 4WD BUL		Propshaft	PS901421
2.0 (165 kw)	2013.05-2015.12	7AT	Rear	Saloon 4WD CNCD		Propshaft	PS900103
	2013.05-2015.12	7AT	Rear	Estate 4WD CNCD		Propshaft	PS900103
	2013.05-2015.12	7AT	-	Saloon 4WD CNCD		Joint,propshaft	602469
	2013.05-2015.12	7AT	-	Estate 4WD CNCD		Joint,propshaft	602469
2.0 (180 kw)	2018.07-	7AT	Rear	Saloon 4WD DKNA	Rear differential with uncoupling feature	Propshaft	PS901874
	2018.07-	7AT	Rear	Estate 4WD DKNA	Rear differential with uncoupling feature	Propshaft	PS901874

	YEAR	TRANSM.	FITTING POSITION	BODY STYLE & DRIVE TYPE & ENGINE	REMARKS	PRODUCT	GSP Ref.
AUDI							
A4 Quattro							
2.0 (183 kw)	2015.11-2019.10	7AT	Rear	Estate 4WD CYRC	Rear differential with uncoupling feature	Propshaft	PS901874
	2015.11-2019.11	7AT	Rear	Saloon 4WD CYRC	Rear differential with uncoupling feature	Propshaft	PS901874
2.0 (185 kw)	2015.05-2019.11	7AT	Rear	Saloon 4WD CYMC/CYRB	Rear differential with uncoupling feature	Propshaft	PS901874
	2015.08-2019.10	7AT	Rear	Estate 4WD CYRB	Rear differential with uncoupling feature	Propshaft	PS901874
	2017.05-2019.10	7AT	Rear	Estate 4WD DDWA	Rear differential with uncoupling feature	Propshaft	PS901874
	2017.05-2019.11	7AT	Rear	Saloon 4WD DDWA	Rear differential with uncoupling feature	Propshaft	PS901874
2.0 (195 kw)	2020.08-	7AT	Rear	Estate 4WD DMTA	Rear differential with uncoupling feature	Propshaft	PS901874
	2020.08-	7AT	Rear	Saloon 4WD DMTA	Rear differential with uncoupling feature	Propshaft	PS901874
2.5 (110 kw)	1997.11-2000.10		Front	Saloon 4WD AFB/AKN		Flexible Coupling	537626
2.5 (132 kw)	2000.10-2004.10		Front	Saloon 4WD AKE/BAU/BDH		Flexible Coupling	537626
2.8 (128 kw)	1994.11-1996.12		Front	Saloon 4WD AAH		Flexible Coupling	537626
2.8 (142 kw)	1996.06-2001.08		Front	Saloon 4WD ACK/ALG/AMX/APR/AQD		Flexible Coupling	537626
3.0 (155 kw)	2008.06-2010.05	7AT	Rear	Saloon 4WD CCWB		Propshaft	PS900103
	2008.06-2010.05	7AT	-	Saloon 4WD CCWB		Joint,propshaft	602469
3.0 (160 kw)	2001.06-2003.05	AT	Rear	Estate 4WD BBJ		Propshaft	PS901421
	2001.06-2003.05	AT	Rear	Saloon 4WD BBJ		Propshaft	PS901421
	2001.06-2003.05		Front	Saloon 4WD BBJ		Flexible Coupling	537626
	2004.11-2006.07	AT	Rear	Estate 4WD BBJ		Propshaft	PS901421
	2004.11-2006.07	AT	Rear	Saloon 4WD BBJ		Propshaft	PS901421
3.0 (162 kw)	2000.10-2004.10	AT	Rear	Saloon 4WD ASN		Propshaft	PS901421
	2000.10-2004.10		Front	Saloon 4WD ASN		Flexible Coupling	537626
	2001.06-2004.10	AT	Rear	Estate 4WD ASN/AVK		Propshaft	PS901421
3.0 (176 kw)	2007.11-2012.03	6MT	Rear	Saloon 4WD CAPA/CCLA/CCWA	Date from:2010.03,Enginecode:CCWA	Propshaft	PS901825
	2007.11-2012.03	7AT	Rear	Saloon 4WD CAPA/CCLA/CCWA	Date from:2010.06	Propshaft	PS900103
	2007.11-2012.03	7AT	-	Saloon 4WD CAPA/CCLA/CCWA	Date from:2010.06	Joint,propshaft	602469
	2008.04-2012.03	6MT	Rear	Estate 4WD CAPA/CCLA/CCWA	Date from:2010.03,Enginecode:CCWA	Propshaft	PS901825
	2008.04-2012.03	7AT	Rear	Estate 4WD CAPA/CCLA/CCWA	Date from:2010.06	Propshaft	PS900103
	2008.04-2012.03	7AT	-	Estate 4WD CAPA/CCLA/CCWA	Date from:2010.06	Joint,propshaft	602469
3.0 (180 kw)	2011.11-2015.12	6MT	Rear	Estate 4WD CDUC/CKVB/CKVC		Propshaft	PS901825
	2011.11-2015.12	6MT	Rear	Saloon 4WD CDUC/CKVB/CKVC		Propshaft	PS901825
	2011.11-2015.12	7AT	Rear	Estate 4WD CDUC/CKVB/CKVC		Propshaft	PS900103
	2011.11-2015.12	7AT	Rear	Saloon 4WD CDUC/CKVB/CKVC		Propshaft	PS900103
	2011.11-2015.12	7AT	-	Estate 4WD CDUC/CKVB/CKVC		Joint,propshaft	602469
	2011.11-2015.12	7AT	-	Saloon 4WD CDUC/CKVB/CKVC		Joint,propshaft	602469
3.0 (200 kw)	2012.02-2015.12	7AT	Rear	Estate 4WD CMUA/CRED		Propshaft	PS900103
	2012.02-2015.12	7AT	Rear	Saloon 4WD CMUA/CRED		Propshaft	PS900103
	2012.02-2015.12	7AT	-	Estate 4WD CMUA/CRED		Joint,propshaft	602469
	2012.02-2015.12	7AT	-	Saloon 4WD CMUA/CRED		Joint,propshaft	602469
3.2 (188 kw)	2004.11-2008.06	AT	Rear	Estate 4WD AUK		Propshaft	PS901421
	2004.11-2008.06	AT	Rear	Saloon 4WD AUK/BKH		Propshaft	PS901421
A5 Cabrio Quattro							
2.0 (140 kw)	2017.03-	7DCT	Rear	Cabriolet 4WD DETA	Without rear differential lock	Propshaft	PS901955
2.0 (155 kw)	2009.03-2017.01	7AT	Rear	Cabriolet 4WD CAEB/CDNC/CPMA	Model year from:2012	Propshaft	PS901418
	2009.03-2017.01	8AT	Rear	Cabriolet 4WD CAEB/CDNC/CPMA	Model year from:2010	Propshaft	PS901417
2.0 (162 kw)	2012.03-2017.01	7AT	Rear	Cabriolet 4WD CPMB		Propshaft	PS901418
	2012.03-2017.01	8AT	Rear	Cabriolet 4WD CPMB		Propshaft	PS901417
2.0 (165 kw)	2013.05-2016.05	7AT	Rear	Cabriolet 4WD CNCD		Propshaft	PS901418
	2013.05-2016.05	8AT	Rear	Cabriolet 4WD CNCD		Propshaft	PS901417
2.0 (169 kw)	2015.08-2017.01	7AT	Rear	Cabriolet 4WD CNCE		Propshaft	PS901418
	2015.08-2017.01	8AT	Rear	Cabriolet 4WD CNCE		Propshaft	PS901417
2.0 (180 kw)	2018.07-	7DCT	Rear	Cabriolet 4WD DKNA	Without rear differential lock	Propshaft	PS901955
2.0 (185 kw)	2016.11-	7DCT	Rear	Cabriolet 4WD CYMC/CYRB	Without rear differential lock	Propshaft	PS901955
	2017.05-2019.12	7DCT	Rear	Cabriolet 4WD DDWA/DLHB	Without rear differential lock	Propshaft	PS901955
3.0 (160 kw)	2016.12-2018.08	7DCT	Rear	Cabriolet 4WD CSWB	Without rear differential lock	Propshaft	PS901955
3.2 (195 kw)	2009.03-2012.03	AT	Rear	Cabriolet 4WD CALA	Model year to:2010	Propshaft	PS901417
A5 Quattro							
2.0 (140 kw)	2016.08-	7DCT	Rear	Coupe 4WD DESA/DETA	Without rear differential lock	Propshaft	PS901955
2.0 (150 kw)	2020.07-	7DCT	Rear	Coupe 4WD DMSA	Without rear differential lock	Propshaft	PS901955
	2020.09-	7DCT	Rear	Coupe 4WD DTPA	Without rear differential lock	Propshaft	PS901955
2.0 (155 kw)	2008.06-2017.01	7AT	Rear	Coupe 4WD CAEB/CDNC/CPMA	Model year from:2012	Propshaft	PS901418
	2008.06-2017.01	8AT	Rear	Coupe 4WD CAEB/CDNC/CPMA	Model year from:2010	Propshaft	PS901417
2.0 (162 kw)	2013.05-2017.01	7AT	Rear	Coupe 4WD CAED		Propshaft	PS901418
	2013.05-2017.01	8AT	Rear	Coupe 4WD CAED		Propshaft	PS901417

	YEAR	TRANSM.	FITTING POSITION	BODY STYLE & DRIVE TYPE & ENGINE	REMARKS	PRODUCT	GSP Ref.
AUDI							
A5 Quattro							
2.0 (165 kw)	2013.05-2016.05	7AT	Rear	Coupe 4WD CNCD		Propshaft	PS901418
	2013.05-2016.05	8AT	Rear	Coupe 4WD CNCD		Propshaft	PS901417
2.0 (169 kw)	2015.08-2017.01	7AT	Rear	Coupe 4WD CNCE		Propshaft	PS901418
	2015.08-2017.01	8AT	Rear	Coupe 4WD CNCE		Propshaft	PS901417
2.0 (180 kw)	2018.07-	7DCT	Rear	Coupe 4WD DKNA	Without rear differential lock	Propshaft	PS901955
2.0 (183 kw)	2016.06-2020.02	7DCT	Rear	Coupe 4WD CYRC	Without rear differential lock	Propshaft	PS901955
2.0 (185 kw)	2016.06-	7DCT	Rear	Coupe 4WD CYMC/CYRB	Without rear differential lock	Propshaft	PS901955
	2017.05-2020.02	7DCT	Rear	Coupe 4WD DDWA/DLHB	Without rear differential lock	Propshaft	PS901955
2.0 (195 kw)	2019.10-	7DCT	Rear	Coupe 4WD DMTA/DPAA	Without rear differential lock	Propshaft	PS901955
3.0 (160 kw)	2016.07-2018.08	7DCT	Rear	Coupe 4WD CSWB	Without rear differential lock	Propshaft	PS901955
3.2 (195 kw)	2007.06-2012.02	AT	Rear	Coupe 4WD CALA	Model year to:2010	Propshaft	PS901417
A5 Sportback Quattro							
2.0 (110 kw)	2017.05-2020.02	7AT	Rear	Hatchback 4WD CZHA/DEUA	Rear differential with uncoupling feature	Propshaft	PS901874
2.0 (140 kw)	2016.08-	7AT	Rear	Hatchback 4WD DESA/DETA	Rear differential with uncoupling feature	Propshaft	PS901874
2.0 (150 kw)	2020.06-	7AT	Rear	Hatchback 4WD DMSA	Rear differential with uncoupling feature	Propshaft	PS901874
	2020.09-	7AT	Rear	Hatchback 4WD DTPA	Rear differential with uncoupling feature	Propshaft	PS901874
2.0 (155 kw)	2009.09-2017.01	7AT	Rear	Hatchback 4WD CDNC	Date to:2010.05	Propshaft	PS901419
2.0 (180 kw)	2019.02-	7AT	Rear	Hatchback 4WD DKNA	Rear differential with uncoupling feature	Propshaft	PS901874
2.0 (183 kw)	2016.09-2020.02	7AT	Rear	Hatchback 4WD CYRC	Rear differential with uncoupling feature	Propshaft	PS901874
2.0 (185 kw)	2016.09-	7AT	Rear	Hatchback 4WD CYMC/CYRB	Rear differential with uncoupling feature	Propshaft	PS901874
	2017.05-2020.02	7AT	Rear	Hatchback 4WD DDWA/DLHB	Rear differential with uncoupling feature	Propshaft	PS901874
2.0 (195 kw)	2019.10-	7AT	Rear	Hatchback 4WD DMTA	Rear differential with uncoupling feature	Propshaft	PS901874
3.0 (180 kw)	2011.08-2017.01	6MT	Rear	Hatchback 4WD CDUC/CKVB/CKVC	Enginecode:CDUC	Propshaft	PS901825
3.2 (195 kw)	2009.09-2012.03	AT	Rear	Hatchback 4WD CALA	Model year to:2010	Propshaft	PS901417
A6 Allroad Quattro							
2.7 (120 kw)	2006.05-2011.08	6AT	Rear	Estate 4WD BSG/CAND		Propshaft	PS900105
	2006.05-2011.08		Centre	Estate 4WD BSG/CAND		Center Bearing Support	539914
2.7 (132 kw)	2006.03-2008.10	6AT	Rear	Estate 4WD BPP		Propshaft	PS900105
	2006.03-2008.10		Centre	Estate 4WD BPP		Center Bearing Support	539914
2.7 (140 kw)	2008.10-2011.08	6AT	Rear	Estate 4WD CANC		Propshaft	PS900105
	2008.10-2011.08		Centre	Estate 4WD CANC		Center Bearing Support	539914
3.0 (140 kw)	2015.11-2018.09	7AT	Rear	Estate 4WD CZVF		Propshaft	PS900581
	2015.11-2018.09	7AT	Rear	Estate 4WD CZVF		Joint,propshaft	602469
	2015.11-2018.09		Centre	Estate 4WD CZVF	539915 and 538609 different structure	Center Bearing Support	539915
3.0 (150 kw)	2012.01-2014.12	7AT	Rear	Estate 4WD CLAA	for PR code:G1D	Propshaft	PS900581
	2012.01-2014.12	7AT	Rear	Estate 4WD CLAA	for PR code:G1D	Joint,propshaft	602469
	2012.01-2014.12		Centre	Estate 4WD CLAA	539915 and 538609 different structure	Center Bearing Support	539915
3.0 (155 kw)	2006.05-2011.08	6MT	Front	Estate 4WD BNG/CDYB		Propshaft	PS900618
	2006.05-2011.08	AT	Rear	Estate 4WD BNG/CDYB		Propshaft	PS900105
	2006.05-2011.08	6MT	-	Estate 4WD BNG/CDYB		Joint,propshaft	605129
	2006.05-2011.08		Centre	Estate 4WD BNG/CDYB	Installation dimensions:226mm	Center Bearing Support	539914
	2006.05-2011.08		Centre	Estate 4WD BNG/CDYB	Installation dimensions:226.8mm	Center Bearing Support	539923
	2014.09-2018.09	7AT	Rear	Estate 4WD CRTF/CZVC	for PR code:G1D	Propshaft	PS900581
	2014.09-2018.09	7AT	Rear	Estate 4WD CRTF/CZVC	for PR code:G1D	Joint,propshaft	602469
	2014.09-2018.09		Centre	Estate 4WD CRTF/CZVC	539915 and 538609 different structure	Center Bearing Support	539915
3.0 (160 kw)	2014.09-2018.09	7AT	Rear	Estate 4WD CRTE/CZVA	for PR code:G1D	Propshaft	PS900581
	2014.09-2018.09	7AT	Rear	Estate 4WD CRTE/CZVA	for PR code:G1D	Joint,propshaft	602469
	2014.09-2018.09		Centre	Estate 4WD CRTE/CZVA	539915 and 538609 different structure	Center Bearing Support	539915
3.0 (171 kw)	2006.05-2008.10	6MT	Front	Estate 4WD ASB		Propshaft	PS900618
	2006.05-2008.10	6MT	-	Estate 4WD ASB		Joint,propshaft	605129
	2006.05-2008.10		Centre	Estate 4WD ASB	Installation dimensions:226mm	Center Bearing Support	539914
	2006.05-2008.10		Centre	Estate 4WD ASB	Installation dimensions:226.8mm	Center Bearing Support	539923
3.0 (176 kw)	2008.10-2011.08	6MT	Front	Estate 4WD CDYA/CDYC		Propshaft	PS900618
	2008.10-2011.08	6AT	Rear	Estate 4WD CDYA/CDYC		Propshaft	PS900105
	2008.10-2011.08	6MT	-	Estate 4WD CDYA/CDYC		Joint,propshaft	605129
	2008.10-2011.08		Centre	Estate 4WD CDYA/CDYC	Installation dimensions:226mm	Center Bearing Support	539914
	2008.10-2011.08		Centre	Estate 4WD CDYA/CDYC	Installation dimensions:226.8mm	Center Bearing Support	539923
3.0 (180 kw)	2012.01-2016.06	7AT	Rear	Estate 4WD CDUD/CKVC	for PR code:G1D	Propshaft	PS900581
	2012.01-2016.06	7AT	Rear	Estate 4WD CDUD/CKVC	for PR code:G1D	Joint,propshaft	602469
	2012.01-2016.06		Centre	Estate 4WD CDUD/CKVC	539915 and 538609 different structure	Center Bearing Support	539915
3.0 (200 kw)	2014.09-2018.09	7AT	Rear	Estate 4WD CRTD	for PR code:G1D	Propshaft	PS900581
	2014.09-2018.09	7AT	Rear	Estate 4WD CRTD	for PR code:G1D	Joint,propshaft	602469
	2014.09-2018.09		Centre	Estate 4WD CRTD	539915 and 538609 different structure	Center Bearing Support	539915

	YEAR	TRANSM.	FITTING POSITION	BODY STYLE & DRIVE TYPE & ENGINE	REMARKS	PRODUCT	GSP Ref.
AUDI							
A6 Allroad Quattro							
3.0 (213 kw)	2008.10-2011.08	6AT	Rear	Estate 4WD CAJA		Propshaft	PS900105
	2008.10-2011.08		Centre	Estate 4WD CAJA		Center Bearing Support	539914
3.0 (228 kw)	2012.01-2014.12	7AT	Rear	Estate 4WD CGWD	for PR code:G1D	Propshaft	PS900581
	2012.01-2014.12	7AT	Rear	Estate 4WD CGWD	for PR code:G1D	Joint,propshaft	602469
	2012.01-2014.12		Centre	Estate 4WD CGWD	539915 and 538609 different structure	Center Bearing Support	539915
3.0 (230 kw)	2012.01-2014.12		Centre	Estate 4WD CGQB		Center Bearing Support	539915
3.0 (235 kw)	2012.01-2018.09		Centre	Estate 4WD CVUA		Center Bearing Support	539915
3.0 (245 kw)	2014.09-2018.09	7AT	Rear	Estate 4WD CREC	for PR code:G1D	Propshaft	PS900581
	2014.09-2018.09	7AT	Rear	Estate 4WD CREC	for PR code:G1D	Joint,propshaft	602469
	2014.09-2018.09		Centre	Estate 4WD CREC	539915 and 538609 different structure	Center Bearing Support	539915
3.2 (188 kw)	2006.05-2008.10	6AT/6MT	Rear	Estate 4WD AUK	For PR code:G0L/G03	Propshaft	PS900105
	2006.05-2008.10		Centre	Estate 4WD AUK		Center Bearing Support	539914
4.2 (257 kw)	2006.05-2010.12	6AT	Rear	Estate 4WD BVJ		Propshaft	PS900105
	2006.05-2010.12		Centre	Estate 4WD BVJ		Center Bearing Support	539914
A6 Quattro							
1.8 (92 kw)	1995.10-1997.04		Front	Saloon 4WD ADR		Flexible Coupling	537626
1.8 (110 kw)	1997.04-2005.01		Front	Saloon 4WD AEB/ANB/APU/ARK/AWT		Flexible Coupling	537626
1.8 (132 kw)	1997.11-2000.10		Front	Saloon 4WD AJL		Flexible Coupling	537626
2.0 (103 kw)	1994.06-1997.04		Front	Saloon 4WD ACE		Flexible Coupling	537626
2.0 (140 kw)	2015.04-2018.09	7AT	Rear	Estate 4WD CNHA/DDDA	for PR code:G1D	Propshaft	PS900581
	2015.04-2018.09	7AT	Rear	Saloon 4WD CNHA/DDDA	for PR code:G1D	Propshaft	PS900581
	2015.04-2018.09	7AT	Rear	Estate 4WD CNHA/DDDA	for PR code:G1D	Joint,propshaft	602469
	2015.04-2018.09	7AT	Rear	Saloon 4WD CNHA/DDDA	for PR code:G1D	Joint,propshaft	602469
	2015.04-2018.09		Centre	Estate 4WD CNHA/DDDA	539915 and 538609 different structure	Center Bearing Support	539915
	2015.04-2018.09		Centre	Saloon 4WD CNHA/DDDA	539915 and 538609 different structure	Center Bearing Support	539915
2.0 (155 kw)	2011.05-2015.04		Centre	Saloon 4WD CAEB		Center Bearing Support	539915
2.0 (183 kw)	2015.05-2018.09	7AT	Rear	Saloon 4WD CYPB	for PR code:G1D	Propshaft	PS900581
	2015.05-2018.09	7AT	Rear	Estate 4WD CYPB	for PR code:G1D	Propshaft	PS900581
	2015.05-2018.09	7AT	Rear	Saloon 4WD CYPB	for PR code:G1D	Joint,propshaft	602469
	2015.05-2018.09	7AT	Rear	Estate 4WD CYPB	for PR code:G1D	Joint,propshaft	602469
	2015.05-2018.09		Centre	Saloon 4WD CYPB	539915 and 538609 different structure	Center Bearing Support	539915
	2015.05-2018.09		Centre	Estate 4WD CYPB	539915 and 538609 different structure	Center Bearing Support	539915
2.0 (185 kw)	2014.11-2018.09	7AT	Rear	Saloon 4WD CYNB/CYPA	Date from:2014.11,for PR code:G1D	Propshaft	PS900581
	2014.11-2018.09	7AT	Rear	Saloon 4WD CYNB/CYPA	Date from:2014.11,for PR code:G1D	Joint,propshaft	602469
	2014.11-2018.09		Centre	Saloon 4WD CYNB/CYPA	539915 and 538609 different structure	Center Bearing Support	539915
	2015.05-2018.09	7AT	Rear	Estate 4WD CYPA	for PR code:G1D	Propshaft	PS900581
	2015.05-2018.09	7AT	Rear	Estate 4WD CYPA	for PR code:G1D	Joint,propshaft	602469
	2015.05-2018.09		Centre	Estate 4WD CYPA	539915 and 538609 different structure	Center Bearing Support	539915
2.3 (98 kw)	1994.08-1995.06		Front	Saloon 4WD AAR		Flexible Coupling	537626
2.4 (115 kw)	1998.08-2001.05		Front	Saloon 4WD APC		Flexible Coupling	537626
2.4 (120 kw)	1997.05-2001.05		Front	Saloon 4WD AJG/APZ		Flexible Coupling	537626
2.4 (121 kw)	1997.05-2001.05		Front	Saloon 4WD AGA/ALF/AML/APS/ARJ		Flexible Coupling	537626
2.4 (125 kw)	2001.06-2004.05		Front	Saloon 4WD BDV		Flexible Coupling	537626
2.4 (130 kw)	2005.01-2008.10	6AT/6MT	Rear	Saloon 4WD BDW		Propshaft	PS900105
	2005.01-2008.10		Centre	Saloon 4WD BDW		Center Bearing Support	539914
	2005.03-2008.09	6AT/6MT	Rear	Estate 4WD BDW		Propshaft	PS900105
	2005.03-2008.09		Centre	Estate 4WD BDW		Center Bearing Support	539914
2.5 (103 kw)	1995.07-1997.04		Front	Saloon 4WD AEL		Flexible Coupling	537626
2.5 (110 kw)	1997.04-2001.05		Front	Saloon 4WD AFB/AKN		Flexible Coupling	537626
2.5 (132 kw)	1999.11-2004.05		Front	Saloon 4WD AKE/BAU/BDH		Flexible Coupling	537626
2.6 (110 kw)	1994.06-1997.04		Front	Saloon 4WD ABC		Flexible Coupling	537626
2.7 (120 kw)	2005.06-2011.03	6AT	Rear	Saloon 4WD BSG/CAND		Propshaft	PS900105
	2005.06-2011.03		Centre	Saloon 4WD BSG/CAND		Center Bearing Support	539914
	2005.06-2011.08	6AT	Rear	Estate 4WD BSG/CAND		Propshaft	PS900105
	2005.06-2011.08		Centre	Estate 4WD BSG/CAND		Center Bearing Support	539914
2.7 (132 kw)	2004.11-2008.10	6AT	Rear	Estate 4WD BPP		Propshaft	PS900105
	2004.11-2008.10		Centre	Estate 4WD BPP		Center Bearing Support	539914
	2005.06-2008.10	6AT	Rear	Saloon 4WD BPP	Date from:2005.06	Propshaft	PS900105
	2005.06-2008.10		Centre	Saloon 4WD BPP		Center Bearing Support	539914
2.7 (140 kw)	2008.10-2011.03	6AT	Rear	Saloon 4WD CANC		Propshaft	PS900105
	2008.10-2011.03		Centre	Saloon 4WD CANC		Center Bearing Support	539914
	2008.10-2011.08	6AT	Rear	Estate 4WD CANC		Propshaft	PS900105
	2008.10-2011.08		Centre	Estate 4WD CANC		Center Bearing Support	539914

	YEAR	TRANSM.	FITTING POSITION	BODY STYLE & DRIVE TYPE & ENGINE	REMARKS	PRODUCT	GSP Ref.
AUDI **A6 Quattro**							
2.7 (169 kw)	1999.02-2001.05	5AT	Rear	Estate 4WD AJK/AZA	Model year from:2000	Propshaft	PS901416
	1999.02-2001.05	5AT	Rear	Saloon 4WD AJK/AZA	Model year from:2000	Propshaft	PS901416
	1999.02-2001.05	5MT	Rear	Saloon 4WD AJK/AZA	Chassis no. to:4B-Y-100 000	Propshaft	PS900104
	1999.02-2001.05		Front	Saloon 4WD AJK/AZA		Flexible Coupling	537626
2.7 (184 kw)	2001.06-2005.01	5AT	Rear	Estate 4WD ARE/BES		Propshaft	PS901416
	2001.06-2005.01	5AT	Rear	Saloon 4WD ARE/BES		Propshaft	PS901416
	2001.06-2005.01		Front	Saloon 4WD ARE/BES		Flexible Coupling	537626
2.7 (187 kw)	2000.01-2002.12	5AT	Rear	Saloon 4WD APB/BEL		Propshaft	PS901416
2.7 (195 kw)	2003.11-2004.07	5AT	Rear	Saloon 4WD BEL		Propshaft	PS901416
2.8 (128 kw)	1994.06-1997.04		Front	Saloon 4WD AAH/AFC		Flexible Coupling	537626
2.8 (140 kw)	1998.08-2001.05		Front	Saloon 4WD ATX		Flexible Coupling	537626
	2008.10-2011.03	6MT	Rear	Saloon 4WD CCDA		Propshaft	PS900105
	2008.10-2011.03		Centre	Saloon 4WD CCDA		Center Bearing Support	539914
	2008.10-2011.08	6MT	Rear	Estate 4WD CCDA		Propshaft	PS900105
	2008.10-2011.08		Centre	Estate 4WD CCDA		Center Bearing Support	539914
2.8 (142 kw)	1996.01-1997.04		Front	Saloon 4WD ACK		Flexible Coupling	537626
	1997.04-2001.05	5MT	Rear	Saloon 4WD ACK/ALG/AMX/APR/AQD	Chassis no. to:4B-Y-100 000	Propshaft	PS900104
	1997.04-2001.05		Front	Saloon 4WD ACK/ALG/AMX/APR/AQD		Flexible Coupling	537626
2.8 (150 kw)	2010.11-2015.04	7AT	Rear	Saloon 4WD CHVA	for PR code:G1D	Propshaft	PS900581
	2010.11-2015.04	7AT	Rear	Saloon 4WD CHVA	for PR code:G1D	Joint,propshaft	602469
	2010.11-2015.04		Centre	Saloon 4WD CHVA	539915 and 538609 different structure	Center Bearing Support	539915
	2011.05-2015.04	7AT	Rear	Estate 4WD CHVA	for PR code:G1D	Propshaft	PS900581
	2011.05-2015.04	7AT	Rear	Estate 4WD CHVA	for PR code:G1D	Joint,propshaft	602469
	2011.05-2015.04		Centre	Estate 4WD CHVA	539915 and 538609 different structure	Center Bearing Support	539915
2.8 (154 kw)	2007.06-2008.09	6AT	Rear	Estate 4WD BDX		Propshaft	PS900105
	2007.06-2008.09		Centre	Estate 4WD BDX		Center Bearing Support	539914
	2007.06-2008.10	6AT	Rear	Saloon 4WD BDX		Propshaft	PS900105
	2007.06-2008.10		Centre	Saloon 4WD BDX		Center Bearing Support	539914
2.8 (162 kw)	2008.10-2011.03	6AT	Rear	Saloon 4WD CCEA		Propshaft	PS900105
	2008.10-2011.03		Centre	Saloon 4WD CCEA		Center Bearing Support	539914
	2008.10-2011.08	6AT	Rear	Estate 4WD CCEA		Propshaft	PS900105
	2008.10-2011.08		Centre	Estate 4WD CCEA		Center Bearing Support	539914
	2014.09-2018.09	7AT	Rear	Saloon 4WD CVPA	for PR code:G1D	Propshaft	PS900581
	2014.09-2018.09	7AT	Rear	Estate 4WD CVPA	for PR code:G1D	Propshaft	PS900581
	2014.09-2018.09	7AT	Rear	Saloon 4WD CVPA	for PR code:G1D	Joint,propshaft	602469
	2014.09-2018.09	7AT	Rear	Estate 4WD CVPA	for PR code:G1D	Joint,propshaft	602469
	2014.09-2018.09		Centre	Saloon 4WD CVPA	539915 and 538609 different structure	Center Bearing Support	539915
	2014.09-2018.09		Centre	Estate 4WD CVPA	539915 and 538609 different structure	Center Bearing Support	539915
3.0 (150 kw)	2011.02-2015.04	7AT	Rear	Saloon 4WD CLAA	Date to:2015.04,for PR code:G1D	Propshaft	PS900581
	2011.02-2015.04	7AT	Rear	Saloon 4WD CLAA	Date to:2015.04,for PR code:G1D	Joint,propshaft	602469
	2011.02-2015.04		Centre	Saloon 4WD CLAA	539915 and 538609 different structure	Center Bearing Support	539915
	2011.05-2015.04	7AT	Rear	Estate 4WD CLAA	Date to:2015.04,for PR code:G1D	Propshaft	PS900581
	2011.05-2015.04	7AT	Rear	Estate 4WD CLAA	Date to:2015.04,for PR code:G1D	Joint,propshaft	602469
	2011.05-2015.04		Centre	Estate 4WD CLAA	539915 and 538609 different structure	Center Bearing Support	539915
3.0 (155 kw)	2005.02-2011.03	6MT	Front	Saloon 4WD BNG/CDYB		Propshaft	PS900618
	2005.02-2011.03	AT	Rear	Saloon 4WD BNG/CDYB	Date from:2005.02	Propshaft	PS900105
	2005.02-2011.03	6MT	-	Saloon 4WD BNG/CDYB		Joint,propshaft	605129
	2005.02-2011.03		Centre	Saloon 4WD BNG/CDYB	Installation dimensions:226mm	Center Bearing Support	539914
	2005.02-2011.03		Centre	Saloon 4WD BNG/CDYB	Installation dimensions:226.8mm	Center Bearing Support	539923
	2005.03-2011.08	6MT	Front	Estate 4WD BNG/CDYB		Propshaft	PS900618
	2005.03-2011.08	AT	Rear	Estate 4WD BNG/CDYB		Propshaft	PS900105
	2005.03-2011.08	6MT	-	Estate 4WD BNG/CDYB		Joint,propshaft	605129
	2005.03-2011.08		Centre	Estate 4WD BNG/CDYB	Installation dimensions:226mm	Center Bearing Support	539914
	2005.03-2011.08		Centre	Estate 4WD BNG/CDYB	Installation dimensions:226.8mm	Center Bearing Support	539923
	2014.09-2018.09	7AT	Rear	Estate 4WD CRTF/CZVC	for PR code:G1D	Propshaft	PS900581
	2014.09-2018.09	7AT	Rear	Saloon 4WD CRTF/CZVC	for PR code:G1D	Propshaft	PS900581
	2014.09-2018.09	7AT	Rear	Estate 4WD CRTF/CZVC	for PR code:G1D	Joint,propshaft	602469
	2014.09-2018.09	7AT	Rear	Saloon 4WD CRTF/CZVC	for PR code:G1D	Joint,propshaft	602469
	2014.09-2018.09		Centre	Estate 4WD CRTF/CZVC	539915 and 538609 different structure	Center Bearing Support	539915
	2014.09-2018.09		Centre	Saloon 4WD CRTF/CZVC	539915 and 538609 different structure	Center Bearing Support	539915
3.0 (160 kw)	2004.04-2006.05	6AT	Rear	Saloon 4WD BBJ	For PR code:G0R	Propshaft	PS900105
	2004.04-2006.05		Centre	Saloon 4WD BBJ		Center Bearing Support	539914
	2005.03-2006.05	6AT	Rear	Estate 4WD BBJ	For PR code:G0R	Propshaft	PS900105
	2005.03-2006.05		Centre	Estate 4WD BBJ		Center Bearing Support	539914

	YEAR	TRANSM.	FITTING POSITION	BODY STYLE & DRIVE TYPE & ENGINE	REMARKS	PRODUCT	GSP Ref.
AUDI **A6 Quattro**							
3.0 (160 kw)	2014.09-2018.09	7AT	Rear	Estate 4WD CRTE/CZVA	for PR code:G1D	Propshaft	PS900581
	2014.09-2018.09	7AT	Rear	Saloon 4WD CRTE/CZVA	for PR code:G1D	Propshaft	PS900581
	2014.09-2018.09	7AT	Rear	Estate 4WD CRTE/CZVA	for PR code:G1D	Joint,propshaft	602469
	2014.09-2018.09	7AT	Rear	Saloon 4WD CRTE/CZVA	for PR code:G1D	Joint,propshaft	602469
	2014.09-2018.09		Centre	Estate 4WD CRTE/CZVA	539915 and 538609 different structure	Center Bearing Support	539915
	2014.09-2018.09		Centre	Saloon 4WD CRTE/CZVA	539915 and 538609 different structure	Center Bearing Support	539915
3.0 (162 kw)	2001.06-2005.01		Front	Saloon 4WD ASN		Flexible Coupling	537626
3.0 (165 kw)	2004.04-2006.05	6MT	Front	Saloon 4WD BMK		Propshaft	PS900618
	2004.04-2006.05	6AT	Rear	Saloon 4WD BMK		Propshaft	PS900105
	2004.04-2006.05	6MT	-	Saloon 4WD BMK		Joint,propshaft	605129
	2004.04-2006.05		Centre	Saloon 4WD BMK	Installation dimensions:226mm	Center Bearing Support	539914
	2004.04-2006.05		Centre	Saloon 4WD BMK	Installation dimensions:226.8mm	Center Bearing Support	539923
	2005.03-2006.05	6MT	Front	Estate 4WD BMK		Propshaft	PS900618
	2005.03-2006.05	AT/MT	Rear	Estate 4WD BMK		Propshaft	PS900105
	2005.03-2006.05	6MT	-	Estate 4WD BMK		Joint,propshaft	605129
	2005.03-2006.05		Centre	Estate 4WD BMK	Installation dimensions:226mm	Center Bearing Support	539914
	2005.03-2006.05		Centre	Estate 4WD BMK	Installation dimensions:226.8mm	Center Bearing Support	539923
3.0 (171 kw)	2006.06-2008.09	6MT	Front	Estate 4WD ASB		Propshaft	PS900618
	2006.06-2008.09	6MT	-	Estate 4WD ASB		Joint,propshaft	605129
	2006.06-2008.09		Centre	Estate 4WD ASB		Center Bearing Support	539923
	2006.06-2008.10	6MT	Front	Saloon 4WD ASB		Propshaft	PS900618
	2006.06-2008.10	6MT	-	Saloon 4WD ASB		Joint,propshaft	605129
	2006.06-2008.10		Centre	Saloon 4WD ASB		Center Bearing Support	539923
3.0 (176 kw)	2008.10-2011.03	6MT	Front	Saloon 4WD CDYA/CDYC		Propshaft	PS900618
	2008.10-2011.03	6AT	Rear	Saloon 4WD CDYA/CDYC		Propshaft	PS900105
	2008.10-2011.03	6MT	-	Saloon 4WD CDYA/CDYC		Joint,propshaft	605129
	2008.10-2011.03		Centre	Saloon 4WD CDYA/CDYC	Installation dimensions:226mm	Center Bearing Support	539914
	2008.10-2011.03		Centre	Saloon 4WD CDYA/CDYC	Installation dimensions:226.8mm	Center Bearing Support	539923
	2008.10-2011.08	6MT	Front	Estate 4WD CDYA/CDYC		Propshaft	PS900618
	2008.10-2011.08	6AT	Rear	Estate 4WD CDYA/CDYC		Propshaft	PS900105
	2008.10-2011.08	6MT	-	Estate 4WD CDYA/CDYC		Joint,propshaft	605129
	2008.10-2011.08		Centre	Estate 4WD CDYA/CDYC	Installation dimensions:226mm	Center Bearing Support	539914
	2008.10-2011.08		Centre	Estate 4WD CDYA/CDYC	Installation dimensions:226.8mm	Center Bearing Support	539923
3.0 (180 kw)	2010.11-2015.04	7AT	Rear	Saloon 4WD CDUC/CDUD/CKVB/CKVC	Date to:2015.04,for PR code:G1D	Propshaft	PS900581
	2010.11-2015.04	7AT	Rear	Saloon 4WD CDUC/CDUD/CKVB/CKVC	Date to:2015.04,for PR code:G1D	Joint,propshaft	602469
	2010.11-2015.04		Centre	Saloon 4WD CDUC/CDUD/CKVB/CKVC	539915 and 538609 different structure	Center Bearing Support	539915
	2011.05-2015.04	7AT	Rear	Estate 4WD CDUC/CDUD/CKVB/CKVC	Date to:2015.04,for PR code:G1D	Propshaft	PS900581
	2011.05-2015.04	7AT	Rear	Estate 4WD CDUC/CDUD/CKVB/CKVC	Date to:2015.04,for PR code:G1D	Joint,propshaft	602469
	2011.05-2015.04		Centre	Estate 4WD CDUC/CDUD/CKVB/CKVC	539915 and 538609 different structure	Center Bearing Support	539915
3.0 (200 kw)	2014.09-2018.09	7AT	Rear	Estate 4WD CRTD	for PR code:G1D	Propshaft	PS900581
	2014.09-2018.09	7AT	Rear	Saloon 4WD CRTD	for PR code:G1D	Propshaft	PS900581
	2014.09-2018.09	7AT	Rear	Estate 4WD CRTD	for PR code:G1D	Joint,propshaft	602469
	2014.09-2018.09	7AT	Rear	Saloon 4WD CRTD	for PR code:G1D	Joint,propshaft	602469
	2014.09-2018.09		Centre	Estate 4WD CRTD	539915 and 538609 different structure	Center Bearing Support	539915
	2014.09-2018.09		Centre	Saloon 4WD CRTD	539915 and 538609 different structure	Center Bearing Support	539915
3.0 (213 kw)	2008.10-2011.08	6AT	Rear	Estate 4WD CAJA		Propshaft	PS900105
	2008.10-2011.08	6AT	Rear	Saloon 4WD CAJA		Propshaft	PS900105
	2008.10-2011.08		Centre	Estate 4WD CAJA		Center Bearing Support	539914
	2008.10-2011.08		Centre	Saloon 4WD CAJA		Center Bearing Support	539914
3.0 (220 kw)	2008.10-2011.03	6AT	Rear	Saloon 4WD CCAA		Propshaft	PS900105
	2008.10-2011.03		Centre	Saloon 4WD CCAA		Center Bearing Support	539914
	2008.10-2011.08	6AT	Rear	Estate 4WD CCAA		Propshaft	PS900105
	2008.10-2011.08		Centre	Estate 4WD CCAA		Center Bearing Support	539914
	2010.11-2012.05	7AT	Rear	Saloon 4WD CGWB	for PR code:G1D	Propshaft	PS900581
	2010.11-2012.05	7AT	Rear	Saloon 4WD CGWB	for PR code:G1D	Joint,propshaft	602469
	2010.11-2012.05		Centre	Saloon 4WD CGWB	539915 and 538609 different structure	Center Bearing Support	539915
	2011.05-2014.12	7AT	Rear	Estate 4WD CGWB	for PR code:G1D	Propshaft	PS900581
	2011.05-2014.12	7AT	Rear	Estate 4WD CGWB	for PR code:G1D	Joint,propshaft	602469
	2011.05-2014.12		Centre	Estate 4WD CGWB	539915 and 538609 different structure	Center Bearing Support	539915
3.0 (228 kw)	2011.03-2015.04	7AT	Rear	Saloon 4WD CGWD/CGXB/CTUA	Date to:2015.04	Propshaft	PS900581
	2011.03-2015.04	7AT	Rear	Saloon 4WD CGWD/CGXB/CTUA	Date to:2015.04	Joint,propshaft	602469
	2011.03-2015.04		Centre	Saloon 4WD CGWD/CGXB/CTUA	539915 and 538609 different structure	Center Bearing Support	539915
	2011.11-2015.04	7AT	Rear	Estate 4WD CGWD	Date to:2015.04,for PR code:G1D	Propshaft	PS900581
	2011.11-2015.04	7AT	Rear	Estate 4WD CGWD	Date to:2015.04,for PR code:G1D	Joint,propshaft	602469

	YEAR	TRANSM.	FITTING POSITION	BODY STYLE & DRIVE TYPE & ENGINE	REMARKS	PRODUCT	GSP Ref.
AUDI							
A6 Quattro							
3.0 (228 kw)	2011.11-2015.04		Centre	Estate 4WD CGWD	539915 and 538609 different structure	Center Bearing Support	539915
3.0 (230 kw)	2011.11-2015.04		Centre	Estate 4WD CGQB		Center Bearing Support	539915
	2011.11-2015.04		Centre	Saloon 4WD CGQB		Center Bearing Support	539915
3.0 (235 kw)	2014.09-2018.09		Centre	Estate 4WD CVUA		Center Bearing Support	539915
	2014.09-2018.09		Centre	Saloon 4WD CVUA		Center Bearing Support	539915
3.0 (240 kw)	2014.09-2018.09		Centre	Estate 4WD CVUB		Center Bearing Support	539915
	2014.10-2018.09		Centre	Saloon 4WD CVUB		Center Bearing Support	539915
3.0 (245 kw)	2014.09-2018.09	7AT	Rear	Estate 4WD CREC	for PR code:G1D	Propshaft	PS900581
	2014.09-2018.09	7AT	Rear	Saloon 4WD CREC	for PR code:G1D	Propshaft	PS900581
	2014.09-2018.09	7AT	Rear	Estate 4WD CREC	for PR code:G1D	Joint,propshaft	602469
	2014.09-2018.09	7AT	Rear	Saloon 4WD CREC	for PR code:G1D	Joint,propshaft	602469
	2014.09-2018.09		Centre	Estate 4WD CREC	539915 and 538609 different structure	Center Bearing Support	539915
	2014.09-2018.09		Centre	Saloon 4WD CREC	539915 and 538609 different structure	Center Bearing Support	539915
3.2 (183 kw)	2006.09-2008.10	6AT	Rear	Saloon 4WD BYU		Propshaft	PS900105
3.2 (188 kw)	2004.04-2008.10	6AT/6MT	Rear	Saloon 4WD AUK/BKH	For PR code:G0L/G03	Propshaft	PS900105
	2004.04-2008.10		Centre	Saloon 4WD AUK/BKH		Center Bearing Support	539914
	2005.03-2008.10	6AT/6MT	Rear	Estate 4WD AUK/BKH	For PR code:G0L/G03	Propshaft	PS900105
	2005.03-2008.10		Centre	Estate 4WD AUK/BKH		Center Bearing Support	539914
3.7 (191 kw)	1999.03-2005.01		Front	Saloon 4WD AQG		Flexible Coupling	537626
4.2 (220 kw)	1999.04-2005.01	5MT	Rear	Saloon 4WD ARS/ASG	Chassis no. to:4B-Y-100 000	Propshaft	PS900104
	1999.04-2005.01		Front	Saloon 4WD ARS/ASG		Flexible Coupling	537626
4.2 (246 kw)	2004.04-2006.05	6AT	Rear	Saloon 4WD BAT		Propshaft	PS900105
	2004.04-2006.05		Centre	Saloon 4WD BAT		Center Bearing Support	539914
	2005.03-2006.05	6AT	Rear	Estate 4WD BAT		Propshaft	PS900105
	2005.03-2006.05		Centre	Estate 4WD BAT		Center Bearing Support	539914
4.2 (257 kw)	2006.06-2011.03	6AT	Rear	Saloon 4WD BVJ		Propshaft	PS900105
	2006.06-2011.03		Centre	Saloon 4WD BVJ		Center Bearing Support	539914
	2006.06-2011.08	6AT	Rear	Estate 4WD BVJ		Propshaft	PS900105
	2006.06-2011.08		Centre	Estate 4WD BVJ		Center Bearing Support	539914
A7 Sportback Quattro							
2.0 (183 kw)	2015.05-2018.05	7AT	Rear	Hatchback 4WD CYPB		Propshaft	PS900581
	2015.05-2018.05	7AT	Rear	Hatchback 4WD CYPB		Joint,propshaft	602469
	2015.05-2018.05		Centre	Hatchback 4WD CYPB	539915 and 538609 different structure	Center Bearing Support	539915
2.0 (185 kw)	2015.05-2018.05	7AT	Rear	Hatchback 4WD CYNB/CYPA		Propshaft	PS900581
	2015.05-2018.05	7AT	Rear	Hatchback 4WD CYNB/CYPA		Joint,propshaft	602469
	2015.05-2018.05		Centre	Hatchback 4WD CYNB/CYPA	539915 and 538609 different structure	Center Bearing Support	539915
2.8 (150 kw)	2010.10-2015.03		Centre	Hatchback 4WD CHVA/CNYA		Center Bearing Support	539915
2.8 (162 kw)	2014.09-2018.05	7AT	Rear	Hatchback 4WD CVPA		Propshaft	PS900581
	2014.09-2018.05	7AT	Rear	Hatchback 4WD CVPA		Joint,propshaft	602469
	2014.09-2018.05		Centre	Hatchback 4WD CVPA	539915 and 538609 different structure	Center Bearing Support	539915
3.0 (140 kw)	2015.11-2018.05	7AT	Rear	Hatchback 4WD CZVE/CZVF		Propshaft	PS900581
	2015.11-2018.05	7AT	Rear	Hatchback 4WD CZVE/CZVF		Joint,propshaft	602469
	2015.11-2018.05		Centre	Hatchback 4WD CZVE/CZVF	539915 and 538609 different structure	Center Bearing Support	539915
3.0 (150 kw)	2010.12-2015.03	7AT	Rear	Hatchback 4WD CLAA		Propshaft	PS900581
	2010.12-2015.03	7AT	Rear	Hatchback 4WD CLAA		Joint,propshaft	602469
	2010.12-2015.03		Centre	Hatchback 4WD CLAA	539915 and 538609 different structure	Center Bearing Support	539915
3.0 (155 kw)	2014.07-2018.12	7AT	Rear	Hatchback 4WD CRTF/CTCB/CZVC		Propshaft	PS900581
	2014.07-2018.12	7AT	Rear	Hatchback 4WD CRTF/CTCB/CZVC		Joint,propshaft	602469
	2014.07-2018.12		Centre	Hatchback 4WD CRTF/CTCB/CZVC	539915 and 538609 different structure	Center Bearing Support	539915
3.0 (160 kw)	2014.07-2018.05	7AT	Rear	Hatchback 4WD CRTE/CZVA		Propshaft	PS900581
	2014.07-2018.05	7AT	Rear	Hatchback 4WD CRTE/CZVA		Joint,propshaft	602469
	2014.07-2018.05		Centre	Hatchback 4WD CRTE/CZVA	539915 and 538609 different structure	Center Bearing Support	539915
3.0 (176 kw)	2013.05-2015.03		Centre	Hatchback 4WD CPNB		Center Bearing Support	539915
3.0 (180 kw)	2010.07-2016.06	7AT	Rear	Hatchback 4WD CDUC/CDUD/CKVB/CKVC		Propshaft	PS900581
	2010.07-2016.06	7AT	Rear	Hatchback 4WD CDUC/CDUD/CKVB/CKVC		Joint,propshaft	602469
	2010.07-2016.06		Centre	Hatchback 4WD CDUC/CDUD/CKVB/CKVC	539915 and 538609 different structure	Center Bearing Support	539915
3.0 (200 kw)	2014.05-2018.05	7AT	Rear	Hatchback 4WD CRTD		Propshaft	PS900581
	2014.05-2018.05	7AT	Rear	Hatchback 4WD CRTD		Joint,propshaft	602469
	2014.05-2018.05		Centre	Hatchback 4WD CRTD	539915 and 538609 different structure	Center Bearing Support	539915
3.0 (220 kw)	2010.07-2012.05	7AT	Rear	Hatchback 4WD CGWB		Propshaft	PS900581
	2010.07-2012.05	7AT	Rear	Hatchback 4WD CGWB		Joint,propshaft	602469
	2010.07-2012.05		Centre	Hatchback 4WD CGWB	539915 and 538609 different structure	Center Bearing Support	539915
3.0 (228 kw)	2011.11-2015.03	7AT	Rear	Hatchback 4WD CGWD/CGXB/CTTA	Date from:2011.11	Propshaft	PS900581
	2011.11-2015.03	7AT	Rear	Hatchback 4WD CGWD/CGXB/CTTA	Date from:2011.11	Joint,propshaft	602469

	YEAR	TRANSM.	FITTING POSITION	BODY STYLE & DRIVE TYPE & ENGINE	REMARKS	PRODUCT	GSP Ref.
AUDI							
A7 Sportback Quattro							
3.0 (228 kw)	2011.11-2015.03		Centre	Hatchback 4WD CGWD/CGXB/CTTA	539915 and 538609 different structure	Center Bearing Support	539915
3.0 (230 kw)	2011.11-2015.03		Centre	Hatchback 4WD CGQB		Center Bearing Support	539915
3.0 (235 kw)	2014.05-2018.05		Centre	Hatchback 4WD CVUA		Center Bearing Support	539915
3.0 (240 kw)	2014.09-2018.05		Centre	Hatchback 4WD CVUB		Center Bearing Support	539915
3.0 (245 kw)	2014.05-2018.05	7AT	Rear	Hatchback 4WD CREC		Propshaft	PS900581
	2014.05-2018.05	7AT	Rear	Hatchback 4WD CREC		Joint,propshaft	602469
	2014.05-2018.05		Centre	Hatchback 4WD CREC	539915 and 538609 different structure	Center Bearing Support	539915
A8 Quattro							
3.0 (155 kw)	2010.08-2018.01	8AT	Rear	Saloon 4WD CDTB/CTBB	For Engine code:CDTB	Propshaft	PS900106
3.0 (171 kw)	2004.02-2010.07	AT	Rear	Saloon 4WD ASB		Propshaft	PS901423
3.0 (183 kw)	2019.01-	8AT	Rear	Saloon 4WD CVMD	For vehicles with extended wheelbase	Propshaft	PS901970
3.0 (184 kw)	2010.07-2018.01	8AT	Rear	Saloon 4WD CDTA/CDTC/CMHA	For Engine code:CDTA/CMHA	Propshaft	PS900106
3.0 (213 kw)	2010.07-2018.01	8AT	Rear	Saloon 4WD CGWA/CGXA/CREG	For Engine code:CGWA/CGXA	Propshaft	PS900106
3.0 (228 kw)	2011.11-2018.01	8AT	Rear	Saloon 4WD CGWD/CREA	For Engine code:CGWD	Propshaft	PS900106
3.0 (245 kw)	2010.06-2014.04	8AT	Rear	Saloon 4WD CGXC/CMDA	Date to:2014.04,For Engine code:CGXC	Propshaft	PS900106
4.0 (309 kw)	2012.05-2013.12	8AT	Rear	Saloon 4WD CEUA	Date to:2013.12	Propshaft	PS900106
4.0 (320 kw)	2013.09-2018.01	8AT	Rear	Saloon 4WD CTGA		Propshaft	PS900106
4.2 (228 kw)	1998.10-2002.09	AT	Rear	Saloon 4WD AQF/AUW		Propshaft	PS901481
4.2 (246 kw)	2002.11-2006.05	6AT	Rear	Saloon 4WD BFM	Model year from:2004,Model year to:2007	Propshaft	PS901424
4.2 (273 kw)	2009.11-2012.06	8AT	Rear	Saloon 4WD CDRA	Date to:2012.06	Propshaft	PS900106
6.0 (331 kw)	2004.02-2010.07	6AT	Rear	Saloon 4WD BHT/BSB/BTE	Model year from:2005,Model year to:2007	Propshaft	PS901424
6.3 (368 kw)	2011.01-2018.01	8AT	Rear	Saloon 4WD CEJA/CTNA	For Engine code:CEJA	Propshaft	PS900106
Allroad Quattro							
2.5 (132 kw)	2000.05-2005.08	AT	Rear	Estate 4WD AKE/BAU		Propshaft	PS901483
2.7 (187 kw)	2000.09-2005.12	AT	Rear	Estate 4WD APB/BEL		Propshaft	PS901482
Q2 Quattro							
2.0 (110 kw)	2016.09-		Front	SUV 4WD DFGA/DTTC		Flexible Coupling	537626
	2016.09-		Rear	SUV 4WD DFGA/DTTC		Flexible Coupling	533882
	2016.09-		Front	SUV 4WD DFGA/DTTC		Flexible Coupling Kit	537626S
	2016.09-		Rear	SUV 4WD DFGA/DTTC		Flexible Coupling Kit	533882S
2.0 (140 kw)	2016.07-2018.08		Front	SUV 4WD DFHA		Flexible Coupling	537626
	2016.07-2018.08		Rear	SUV 4WD DFHA		Flexible Coupling	533882
	2016.07-2018.08		Front	SUV 4WD DFHA		Flexible Coupling Kit	537626S
	2016.07-2018.08		Rear	SUV 4WD DFHA		Flexible Coupling Kit	533882S
	2017.05-		Front	SUV 4WD CZPB/DKZA/DNNA		Flexible Coupling	537626
	2017.05-		Rear	SUV 4WD CZPB/DKZA/DNNA		Flexible Coupling	533882
	2017.05-		Front	SUV 4WD CZPB/DKZA/DNNA		Flexible Coupling Kit	537626S
	2017.05-		Rear	SUV 4WD CZPB/DKZA/DNNA		Flexible Coupling Kit	533882S
Q3							
1.4 (110 kw)	2013.10-2018.10		Centre	SUV FWD CHPB/CZDA/CZEA		Center Bearing Support	538658
2.0 (100 kw)	2011.09-2018.10		Centre	SUV FWD CFFA/CUVB/DFTB		Center Bearing Support	538658
2.0 (103 kw)	2011.09-2015.04		Centre	SUV FWD CFFB/CLJA		Center Bearing Support	538658
2.0 (110 kw)	2014.11-2018.10		Centre	SUV FWD CUVC/DBBA/DFTA		Center Bearing Support	538658
	2014.11-2018.10		Rear	SUV FWD CUVC/DBBA/DFTA		Flexible Coupling Kit	533882S
2.0 (130 kw)	2013.05-2015.04		Centre	SUV FWD CFGC		Center Bearing Support	538658
	2013.05-2015.04		Rear	SUV FWD CFGC		Flexible Coupling Kit	533882S
2.0 (132 kw)	2015.05-2018.10		Centre	SUV FWD CULB		Center Bearing Support	538658
2.0 (135 kw)	2015.05-2018.10		Centre	SUV FWD CUWA/DFUA		Center Bearing Support	538658
Q3 Quattro							
2.0 (103 kw)	2012.01-2015.04	6MT/7AT	Rear	SUV 4WD CFFB	Date to:2015.04;Transmission:6MT,Trans. code:MQ500	Propshaft	PS900520
	2012.01-2015.04		Centre	SUV 4WD CFFB		Center Bearing Support	538658
	2012.01-2015.04		Centre	SUV 4WD CFFB	Model year to:2014	Center Bearing Support Kit	538695S
	2012.01-2015.04		Front	SUV 4WD CFFB		Flexible Coupling	537626
	2012.01-2015.04		Rear	SUV 4WD CFFB		Flexible Coupling	533882
	2012.01-2015.04		Front	SUV 4WD CFFB		Flexible Coupling Kit	537626S
	2012.01-2015.04		Rear	SUV 4WD CFFB		Flexible Coupling Kit	533882S
2.0 (110 kw)	2014.11-2018.10	6MT/7DCT	Rear	SUV 4WD CUVC/DFTA	Transmission:6MT,Trans. code:MQ500	Propshaft	PS900520
	2014.11-2018.10		Centre	SUV 4WD CUVC/DFTA		Center Bearing Support	538658
	2014.11-2018.10		Centre	SUV 4WD CUVC/DFTA	Model year from:2015	Center Bearing Support Kit	538695S
	2014.11-2018.10		Front	SUV 4WD CUVC/DFTA		Flexible Coupling	537626
	2014.11-2018.10		Rear	SUV 4WD CUVC/DFTA		Flexible Coupling	533882
	2014.11-2018.10		Front	SUV 4WD CUVC/DFTA		Flexible Coupling Kit	537626S
	2014.11-2018.10		Rear	SUV 4WD CUVC/DFTA		Flexible Coupling Kit	533882S
	2018.07-		Front	SUV 4WD DFGA/DTSA/DTSB		Flexible Coupling	537626

	YEAR	TRANSM.	FITTING POSITION	BODY STYLE & DRIVE TYPE & ENGINE	REMARKS	PRODUCT	GSP Ref.
AUDI **Q3 Quattro**							
2.0 (110 kw)	2018.07-		Rear	SUV 4WD DFGA/DTSA/DTSB		Flexible Coupling	533882
	2018.07-		Front	SUV 4WD DFGA/DTSA/DTSB		Flexible Coupling Kit	537626S
	2018.07-		Rear	SUV 4WD DFGA/DTSA/DTSB		Flexible Coupling Kit	533882S
2.0 (120 kw)	2011.06-2015.04	6MT/7AT	Rear	SUV 4WD CFGD	Transmission:6MT,Trans. code:MQ500	Propshaft	PS900520
	2011.06-2015.04		Centre	SUV 4WD CFGD	Model year from:2012,Model year to:2014	Center Bearing Support Kit	538695S
	2011.06-2015.04		Front	SUV 4WD CFGD		Flexible Coupling	537626
	2011.06-2015.04		Rear	SUV 4WD CFGD		Flexible Coupling	533882
	2011.06-2015.04		Front	SUV 4WD CFGD		Flexible Coupling Kit	537626S
	2011.06-2015.04		Rear	SUV 4WD CFGD		Flexible Coupling Kit	533882S
2.0 (125 kw)	2011.06-2015.04	6MT/7AT	Rear	SUV 4WD CCZC	Transmission:6MT,Trans. code:MQ500	Propshaft	PS900520
	2011.06-2015.04		Centre	SUV 4WD CCZC		Center Bearing Support	538658
	2011.06-2015.04		Centre	SUV 4WD CCZC		Center Bearing Support Kit	538695S
	2011.06-2015.04		Front	SUV 4WD CCZC		Flexible Coupling	537626
	2011.06-2015.04		Rear	SUV 4WD CCZC		Flexible Coupling	533882
	2011.06-2015.04		Front	SUV 4WD CCZC		Flexible Coupling Kit	537626S
	2011.06-2015.04		Rear	SUV 4WD CCZC		Flexible Coupling Kit	533882S
2.0 (130 kw)	2011.06-2015.04	6MT/7AT	Rear	SUV 4WD CFGC/CLLB	Date to:2015.04;Transmission:6MT,Trans. code:MQ500	Propshaft	PS900520
	2011.06-2015.04		Centre	SUV 4WD CFGC/CLLB		Center Bearing Support	538658
	2011.06-2015.04		Centre	SUV 4WD CFGC/CLLB	Model year from:2012,Model year to:2014	Center Bearing Support Kit	538695S
	2011.06-2015.04		Front	SUV 4WD CFGC/CLLB		Flexible Coupling	537626
	2011.06-2015.04		Rear	SUV 4WD CFGC/CLLB		Flexible Coupling	533882
	2011.06-2015.04		Front	SUV 4WD CFGC/CLLB		Flexible Coupling Kit	537626S
	2011.06-2015.04		Rear	SUV 4WD CFGC/CLLB		Flexible Coupling Kit	533882S
2.0 (132 kw)	2015.01-2018.12	6MT/7AT	Rear	SUV 4WD CULB	Transmission:6MT,Trans. code:MQ500	Propshaft	PS900520
	2015.01-2018.12		Centre	SUV 4WD CULB		Center Bearing Support	538658
	2015.01-2018.12		Centre	SUV 4WD CULB		Center Bearing Support Kit	538695S
	2015.01-2018.12		Front	SUV 4WD CULB		Flexible Coupling	537626
	2015.01-2018.12		Rear	SUV 4WD CULB		Flexible Coupling	533882
	2015.01-2018.12		Front	SUV 4WD CULB		Flexible Coupling Kit	537626S
	2015.01-2018.12		Rear	SUV 4WD CULB		Flexible Coupling Kit	533882S
2.0 (135 kw)	2014.11-2018.10	6MT/7AT	Rear	SUV 4WD CUWA/CYLA/DFUA	Transmission:6MT,Trans. code:MQ500	Propshaft	PS900520
	2014.11-2018.10		Centre	SUV 4WD CUWA/CYLA/DFUA		Center Bearing Support	538658
	2014.11-2018.10		Centre	SUV 4WD CUWA/CYLA/DFUA	Model year from:2015	Center Bearing Support Kit	538695S
	2014.11-2018.10		Front	SUV 4WD CUWA/CYLA/DFUA		Flexible Coupling	537626
	2014.11-2018.10		Rear	SUV 4WD CUWA/CYLA/DFUA		Flexible Coupling	533882
	2014.11-2018.10		Front	SUV 4WD CUWA/CYLA/DFUA		Flexible Coupling Kit	537626S
	2014.11-2018.10		Rear	SUV 4WD CUWA/CYLA/DFUA		Flexible Coupling Kit	533882S
2.0 (140 kw)	2018.09-		Front	SUV 4WD DKTC/DNNA		Flexible Coupling	537626
	2018.09-		Rear	SUV 4WD DKTC/DNNA		Flexible Coupling	533882
	2018.09-		Front	SUV 4WD DKTC/DNNA		Flexible Coupling Kit	537626S
	2018.09-		Rear	SUV 4WD DKTC/DNNA		Flexible Coupling Kit	533882S
	2018.10-		Front	SUV 4WD DFHA		Flexible Coupling	537626
	2018.10-		Rear	SUV 4WD DFHA		Flexible Coupling	533882
	2018.10-		Front	SUV 4WD DFHA		Flexible Coupling Kit	537626S
	2018.10-		Rear	SUV 4WD DFHA		Flexible Coupling Kit	533882S
2.0 (147 kw)	2014.04-2018.10	6MT/7AT	Rear	SUV 4WD CCTA	Transmission:6MT,Trans. code:MQ500	Propshaft	PS900520
	2014.04-2018.10		Centre	SUV 4WD CCTA	for model year:2015	Center Bearing Support Kit	538695S
	2014.04-2018.10		Front	SUV 4WD CCTA		Flexible Coupling	537626
	2014.04-2018.10		Rear	SUV 4WD CCTA		Flexible Coupling	533882
	2014.04-2018.10		Front	SUV 4WD CCTA		Flexible Coupling Kit	537626S
	2014.04-2018.10		Rear	SUV 4WD CCTA		Flexible Coupling Kit	533882S
2.0 (155 kw)	2011.06-2015.04	6MT/7AT	Rear	SUV 4WD CPSA	Transmission:6MT,Trans. code:MQ500	Propshaft	PS900520
	2011.06-2015.04		Centre	SUV 4WD CPSA		Center Bearing Support	538658
	2011.06-2015.04		Centre	SUV 4WD CPSA		Center Bearing Support Kit	538695S
	2011.06-2015.04		Front	SUV 4WD CPSA		Flexible Coupling	537626
	2011.06-2015.04		Rear	SUV 4WD CPSA		Flexible Coupling	533882
	2011.06-2015.04		Front	SUV 4WD CPSA		Flexible Coupling Kit	537626S
	2011.06-2015.04		Rear	SUV 4WD CPSA		Flexible Coupling Kit	533882S
2.0 (162 kw)	2014.11-2018.10	6MT/7AT	Rear	SUV 4WD CULC	Transmission:6MT,Trans. code:MQ500	Propshaft	PS900520
	2014.11-2018.10		Centre	SUV 4WD CULC		Center Bearing Support	538658
	2014.11-2018.10		Centre	SUV 4WD CULC	Model year from:2015	Center Bearing Support Kit	538695S
	2014.11-2018.10		Front	SUV 4WD CULC		Flexible Coupling	537626
	2014.11-2018.10		Rear	SUV 4WD CULC		Flexible Coupling	533882
	2014.11-2018.10		Front	SUV 4WD CULC		Flexible Coupling Kit	537626S

	YEAR	TRANSM.	FITTING POSITION	BODY STYLE & DRIVE TYPE & ENGINE	REMARKS	PRODUCT	GSP Ref.
AUDI							
Q3 Quattro							
2.0 (162 kw)	2014.11-2018.10		Rear	SUV 4WD CULC		Flexible Coupling Kit	533882S
2.0 (169 kw)	2018.07-		Front	SUV 4WD DKTA		Flexible Coupling	537626
	2018.07-		Rear	SUV 4WD DKTA		Flexible Coupling	533882
	2018.07-		Front	SUV 4WD DKTA		Flexible Coupling Kit	537626S
	2018.07-		Rear	SUV 4WD DKTA		Flexible Coupling Kit	533882S
Q3 Sportback Quattro							
2.0 (110 kw)	2019.09-		Front	SUV 4WD DFGA/DTSA/DTSB		Flexible Coupling	537626
	2019.09-		Rear	SUV 4WD DFGA/DTSA/DTSB		Flexible Coupling	533882
	2019.09-		Front	SUV 4WD DFGA/DTSA/DTSB		Flexible Coupling Kit	537626S
	2019.09-		Rear	SUV 4WD DFGA/DTSA/DTSB		Flexible Coupling Kit	533882S
2.0 (140 kw)	2019.07-		Front	SUV 4WD DFHA		Flexible Coupling	537626
	2019.07-		Rear	SUV 4WD DFHA		Flexible Coupling	533882
	2019.07-		Front	SUV 4WD DFHA		Flexible Coupling Kit	537626S
	2019.07-		Rear	SUV 4WD DFHA		Flexible Coupling Kit	533882S
	2019.11-		Front	SUV 4WD DKTC/DNNA		Flexible Coupling	537626
	2019.11-		Rear	SUV 4WD DKTC/DNNA		Flexible Coupling	533882
	2019.11-		Front	SUV 4WD DKTC/DNNA		Flexible Coupling Kit	537626S
	2019.11-		Rear	SUV 4WD DKTC/DNNA		Flexible Coupling Kit	533882S
2.0 (169 kw)	2019.06-		Front	SUV 4WD DKTA		Flexible Coupling	537626
	2019.06-		Rear	SUV 4WD DKTA		Flexible Coupling	533882
	2019.06-		Front	SUV 4WD DKTA		Flexible Coupling Kit	537626S
	2019.06-		Rear	SUV 4WD DKTA		Flexible Coupling Kit	533882S
Q5							
2.0 (140 kw)	2015.09-2017.05		-	SUV FWD CNHA		Joint,propshaft	661093
Q5 Quattro							
2.0 (100 kw)	2009.08-2017.05		-	SUV 4WD CAGB/CJCB/CSUB		Joint,propshaft	661093
2.0 (105 kw)	2009.08-2013.05		-	SUV 4WD CAGA/CJCA		Joint,propshaft	661093
2.0 (110 kw)	2012.11-2017.05	AT	Rear	SUV 4WD CJCD/CSUA		Propshaft	PS900590
	2012.11-2017.05		-	SUV 4WD CJCD/CSUA		Joint,propshaft	661093
2.0 (120 kw)	2008.11-2017.05	DCT	Rear	SUV 4WD CAHB/CGLA/CGLD/CNHC	Date to:2010.05	Propshaft	PS900107
	2008.11-2017.05	DCT	Rear	SUV 4WD CAHB/CGLA/CGLD/CNHC	Date from:2010.06	Propshaft	PS900552
	2008.11-2017.05		-	SUV 4WD CAHB/CGLA/CGLD/CNHC		Joint,propshaft	661093
2.0 (125 kw)	2008.11-2012.09	DCT	Rear	SUV 4WD CAHA/CGLB/CMGA	Date to:2010.05	Propshaft	PS900107
	2008.11-2012.09	DCT	Rear	SUV 4WD CAHA/CGLB/CMGA	Date from:2010.06	Propshaft	PS900552
	2008.11-2012.09		Rear	SUV 4WD CAHA/CGLB/CMGA		Joint,propshaft	661093
2.0 (130 kw)	2012.06-2017.05	DCT	Rear	SUV 4WD CGLC/CMGB		Propshaft	PS900552
	2012.06-2017.05		Rear	SUV 4WD CGLC/CMGB		Joint,propshaft	661093
2.0 (132 kw)	2009.08-2017.05	8AT	Rear	SUV 4WD CDNB/CNCB		Propshaft	PS900108
	2009.08-2017.05		-	SUV 4WD CDNB/CNCB		Joint,propshaft	661093
2.0 (140 kw)	2014.04-2017.05	DCT	Rear	SUV 4WD CNHA	Date from:2014.04	Propshaft	PS900552
	2014.04-2017.05		Rear	SUV 4WD CNHA		Joint,propshaft	661093
2.0 (155 kw)	2008.11-2012.09	8AT	Rear	SUV 4WD CAEB/CDNC		Propshaft	PS900108
	2008.11-2012.09	DCT	Rear	SUV 4WD CAEB/CDNC	Date to:2010.05	Propshaft	PS900107
	2008.11-2012.09	DCT	Rear	SUV 4WD CAEB/CDNC	Date from:2010.06	Propshaft	PS900552
	2008.11-2012.09		Rear	SUV 4WD CAEB/CDNC		Joint,propshaft	661093
2.0 (162 kw)	2013.05-2017.05	8AT	Rear	SUV 4WD CPMB		Propshaft	PS900108
2.0 (165 kw)	2012.06-2016.05	8AT	Rear	SUV 4WD CNCD		Propshaft	PS900108
	2012.06-2016.05	6MT/8AT	Rear	SUV 4WD CNCD		Joint,propshaft	661093
2.0 (169 kw)	2015.08-2017.05	8AT	Rear	SUV 4WD CNCE		Propshaft	PS900108
2.0 (180 kw)	2011.06-2016.06	8AT	Rear	SUV 4WD CHJA		Propshaft	PS900108
	2011.06-2016.06		Rear	SUV 4WD CHJA		Joint,propshaft	661093
2.0 (183 kw)	2017.01-2020.11		-	SUV 4WD DAXC		Joint,propshaft	661093
2.0 (185 kw)	2016.06-2020.11	7AT	Rear	SUV 4WD DAXB/DAYB		Joint,propshaft	661093
3.0 (155 kw)	2008.11-2012.09	DCT	Rear	SUV 4WD CCWB	Date to:2010.05	Propshaft	PS900107
	2008.11-2012.09	DCT	Rear	SUV 4WD CCWB	Date from:2010.06	Propshaft	PS900552
	2008.11-2012.09		-	SUV 4WD CCWB		Joint,propshaft	661093
3.0 (176 kw)	2008.11-2017.05	8AT	Rear	SUV 4WD CCWA/CPNB		Propshaft	PS900108
	2008.11-2017.05	DCT	Rear	SUV 4WD CCWA/CPNB	Date to:2010.05	Propshaft	PS900107
	2008.11-2017.05	DCT	Rear	SUV 4WD CCWA/CPNB	Date from:2010.06	Propshaft	PS900552
	2008.11-2017.05		Rear	SUV 4WD CCWA/CPNB		Joint,propshaft	661093
3.0 (180 kw)	2012.06-2017.05	DCT	Rear	SUV 4WD CDUD		Propshaft	PS900552
	2012.06-2017.05		Rear	SUV 4WD CDUD		Joint,propshaft	661093
3.0 (184 kw)	2014.01-2017.05	DCT	Rear	SUV 4WD CTBC	Date from:2014.01	Propshaft	PS900552

	YEAR	TRANSM.	FITTING POSITION	BODY STYLE & DRIVE TYPE & ENGINE	REMARKS	PRODUCT	GSP Ref.
AUDI							
Q5 Quattro							
3.0 (190 kw)	2013.11-2017.05	DCT	Rear	SUV 4WD CTBA		Propshaft	PS900552
	2013.11-2017.05		Rear	SUV 4WD CTBA		Joint,propshaft	661093
3.0 (200 kw)	2012.06-2017.12	8AT	Rear	SUV 4WD CTUC/CTVA		Propshaft	PS900108
	2012.06-2017.12	8AT	Rear	SUV 4WD CTUC/CTVA		Joint,propshaft	661093
3.2 (199 kw)	2008.11-2012.09	DCT	Rear	SUV 4WD CALB	Date to:2010.05	Propshaft	PS900107
	2008.11-2012.09	DCT	Rear	SUV 4WD CALB	Date from:2010.06,Date to:2012.09	Propshaft	PS900552
	2008.11-2012.09	6AT/7AT	Rear	SUV 4WD CALB		Joint,propshaft	661093
Q7 Quattro							
2.0 (185 kw)	2015.08-	AT	Rear	SUV 4WD CYMC/CYRB/DMFB	Date to:2017.09,for PR Code:T2G/T2H	Propshaft	PS900595
	2015.08-		Rear	SUV 4WD CYMC/CYRB/DMFB	Date to:2017.09,for PR Code:T2G/T2H	Joint,propshaft	602469
	2015.08-		Centre	SUV 4WD CYMC/CYRB/DMFB		Center Bearing Support	538989
3.0 (150 kw)	2010.05-2015.08	8AT	Front	SUV 4WD CJGC/CJMA		Propshaft	PS900111
	2010.05-2015.08	AT	Rear	SUV 4WD CJGC/CJMA		Propshaft	PS901360
	2010.05-2015.08		Centre	SUV 4WD CJGC/CJMA		Center Bearing Support	539903
	2010.05-2015.08		Centre	SUV 4WD CJGC/CJMA		Center Bearing Support Kit	539931S
	2010.11-2015.08	AT	Rear	SUV Van 4WD CJMA		Propshaft	PS901360
3.0 (155 kw)	2006.03-2010.05	AT	Front	SUV 4WD BUN/CASB	For Engine Code:BUN,For PR code:T8T/T41/TA0/TE1	Propshaft	PS900525
	2006.03-2010.05		Front	SUV 4WD BUN/CASB	For Engine Code:BUN,For PR code:T8T/T41/TA0/TE1	Joint,propshaft	661094
	2006.03-2010.05		Centre	SUV 4WD BUN/CASB		Center Bearing Support	539903
	2006.03-2010.05		Centre	SUV 4WD BUN/CASB		Center Bearing Support Kit	539931S
	2015.08-2019.12	AT	Rear	SUV 4WD CRTE/CZZA/CZZB	Date to:2017.09,for PR Code:TS8/0K0	Propshaft	PS900595
	2015.08-2019.12		Rear	SUV 4WD CRTE/CZZA/CZZB	Date to:2017.09,for PR Code:TS8/0K0	Joint,propshaft	602469
	2015.08-2019.12		Centre	SUV 4WD CRTE/CZZA/CZZB		Center Bearing Support	538989
3.0 (160 kw)	2015.08-2019.12	AT	Rear	SUV 4WD CRTE/CZZA/CZZB	Date from:2015.08,Date to:2017.09,for PR Code:TS8/0K0	Propshaft	PS900595
	2015.08-2019.12		Rear	SUV 4WD CRTE/CZZA/CZZB	Date from:2015.08,Date to:2017.09,for PR Code:TS8/0K0	Joint,propshaft	602469
	2015.08-2019.12		Centre	SUV 4WD CRTE/CZZA/CZZB		Center Bearing Support	538989
3.0 (165 kw)	2009.06-2012.05	AT	Front	SUV 4WD CATA	Date from:2011.01	Propshaft	PS900111
	2009.06-2012.05	AT	Front	SUV 4WD CATA	Date to:2010.12	Propshaft	PS900525
	2009.06-2012.05	AT	Rear	SUV 4WD CATA		Propshaft	PS901360
	2009.06-2012.05		Front	SUV 4WD CATA	Date to:2010.12	Joint,propshaft	661094
	2009.06-2012.05		Centre	SUV 4WD CATA		Center Bearing Support	539903
	2009.06-2012.05		Centre	SUV 4WD CATA		Center Bearing Support Kit	539931S
3.0 (171 kw)	2006.03-2008.05	AT	Front	SUV 4WD BUG	For PR code:T8T/T41/TA0/TE1	Propshaft	PS900525
	2006.03-2008.05		Front	SUV 4WD BUG	For PR code:T8T/T41/TA0/TE1	Joint,propshaft	661094
	2006.03-2008.05		Centre	SUV 4WD BUG		Center Bearing Support Kit	539931S
3.0 (176 kw)	2007.11-2012.05	AT	Rear	SUV Van 4WD CASA/CCMA/CJGA		Propshaft	PS901360
	2007.11-2015.08	AT	Front	SUV 4WD CASA/CCMA/CJGA/CNRB	Date from:2011.01	Propshaft	PS900111
	2007.11-2015.08	AT	Front	SUV 4WD CASA/CCMA/CJGA/CNRB	Date to:2010.12,For PR code:T41/TE1	Propshaft	PS900525
	2007.11-2015.08	AT	Rear	SUV 4WD CASA/CCMA/CJGA/CNRB		Propshaft	PS901360
	2007.11-2015.08		Front	SUV 4WD CASA/CCMA/CJGA/CNRB	Date to:2010.12,For PR code:T41/TE1	Joint,propshaft	661094
	2007.11-2015.08		Centre	SUV 4WD CASA/CCMA/CJGA/CNRB		Center Bearing Support Kit	539931S
3.0 (180 kw)	2011.05-2015.08	8AT	Front	SUV 4WD CJGD/CLZB/CRCA		Propshaft	PS900111
	2011.05-2015.08	AT	Rear	SUV 4WD CJGD/CLZB/CRCA		Propshaft	PS901360
	2011.05-2015.08	AT	Rear	SUV Van 4WD CLZB/CRCA		Propshaft	PS901360
	2011.05-2015.08		Centre	SUV 4WD CJGD/CLZB/CRCA		Center Bearing Support	539903
	2011.05-2015.08		Centre	SUV 4WD CJGD/CLZB/CRCA		Center Bearing Support Kit	539931S
3.0 (183 kw)	2015.06-	AT	Rear	SUV 4WD CVMD	Date to:2017.09,for PR Code:TS8/0K0	Propshaft	PS900595
	2015.06-		Rear	SUV 4WD CVMD	Date to:2017.09,for PR Code:TS8/0K0	Joint,propshaft	602469
	2015.06-		Centre	SUV 4WD CVMD		Center Bearing Support	538989
3.0 (190 kw)	2015.06-2019.12	AT	Rear	SUV 4WD CUEA	Date to:2017.09,for PR Code:TS8/0K0	Propshaft	PS900595
	2015.06-2019.12		Rear	SUV 4WD CUEA	Date to:2017.09,for PR Code:TS8/0K0	Joint,propshaft	602469
	2015.06-2019.12		Centre	SUV 4WD CUEA		Center Bearing Support	538989
3.0 (200 kw)	2010.05-2015.08	8AT	Front	SUV 4WD CJTC/CJWC		Propshaft	PS900111
	2010.05-2015.08	AT	Rear	SUV 4WD CJTC/CJWC		Propshaft	PS900110
	2010.05-2015.08	AT	Front	SUV 4WD CJTC/CJWC		Joint,propshaft	802217
	2010.05-2015.08	AT	Rear	SUV 4WD CJTC/CJWC		Joint,propshaft	804534
	2010.05-2015.08	AT	-	SUV 4WD CJTC/CJWC		Joint,propshaft	605122
	2010.05-2015.08		Centre	SUV 4WD CJTC/CJWC		Center Bearing Support	539903
	2015.01-2019.12	AT	Rear	SUV 4WD CRTC	Date to:2017.09,for PR Code:TS8/0K0	Propshaft	PS900595
	2015.01-2019.12		Rear	SUV 4WD CRTC	Date to:2017.09,for PR Code:TS8/0K0	Joint,propshaft	602469
	2015.01-2019.12		Centre	SUV 4WD CRTC		Center Bearing Support	538989
3.0 (206 kw)	2011.05-2015.08	8AT	Front	SUV 4WD CJWE/CTWB		Propshaft	PS900111
	2011.05-2015.08	AT	Rear	SUV 4WD CJWE/CTWB		Propshaft	PS900110
	2011.05-2015.08	AT	Front	SUV 4WD CJWE/CTWB		Joint,propshaft	802217

	YEAR	TRANSM.	FITTING POSITION	BODY STYLE & DRIVE TYPE & ENGINE	REMARKS	PRODUCT	GSP Ref.
AUDI							
Q7 Quattro							
3.0 (206 kw)	2011.05-2015.08	AT	Rear	SUV 4WD CJWE/CTWB		Joint,propshaft	804534
	2011.05-2015.08	AT	-	SUV 4WD CJWE/CTWB		Joint,propshaft	605122
	2011.05-2015.08		Centre	SUV 4WD CJWE/CTWB		Center Bearing Support	539903
3.0 (245 kw)	2010.05-2015.08	8AT	Front	SUV 4WD CJTB/CJWB/CNAA/CTWA		Propshaft	PS900111
	2010.05-2015.08	AT	Rear	SUV 4WD CJTB/CJWB/CNAA/CTWA		Propshaft	PS900110
	2010.05-2015.08	AT	Rear	SUV Van 4WD CJTB		Propshaft	PS900110
	2010.05-2015.08	AT	Front	SUV 4WD CJTB/CJWB/CNAA/CTWA		Joint,propshaft	802217
	2010.05-2015.08	AT	Front	SUV Van 4WD CJTB		Joint,propshaft	802217
	2010.05-2015.08	AT	Rear	SUV 4WD CJTB/CJWB/CNAA/CTWA		Joint,propshaft	804534
	2010.05-2015.08	AT	Rear	SUV Van 4WD CJTB		Joint,propshaft	804534
	2010.05-2015.08	AT	-	SUV 4WD CJTB/CJWB/CNAA/CTWA		Joint,propshaft	605122
	2010.05-2015.08	AT	-	SUV Van 4WD CJTB		Joint,propshaft	605122
	2010.05-2015.08		Centre	SUV 4WD CJTB/CJWB/CNAA/CTWA		Center Bearing Support	539903
	2015.01-2019.12	AT	Rear	SUV 4WD CREC		Propshaft	PS900110
3.0 (275 kw)	2015.08-2019.12	AT	Rear	SUV 4WD CVZA	Date to:2017.09,for PR Code:TS8/0K0	Propshaft	PS900595
	2015.08-2019.12		Rear	SUV 4WD CVZA	Date to:2017.09,for PR Code:TS8/0K0	Joint,propshaft	602469
	2015.08-2019.12		Centre	SUV 4WD CVZA		Center Bearing Support	538989
3.6 (206 kw)	2006.08-2010.05	AT	Front	SUV 4WD BHK	For PR code:T8T/T41/TA0/TE1	Propshaft	PS900525
	2006.08-2010.05	6AT	Rear	SUV 4WD BHK		Propshaft	PS900109
	2006.08-2010.05	6AT	Rear	SUV Van 4WD BHK		Propshaft	PS900109
	2006.08-2010.05		Front	SUV 4WD BHK	For PR code:T8T/T41/TA0/TE1	Joint,propshaft	661094
	2006.08-2010.05		Rear	SUV 4WD BHK		Joint,propshaft	602478
	2006.08-2010.05		Centre	SUV 4WD BHK		Center Bearing Support	539903
	2006.08-2010.05		Centre	SUV 4WD BHK		Center Bearing Support Kit	539931S
4.2 (240 kw)	2007.03-2009.06		Centre	SUV 4WD BTR		Center Bearing Support	539903
4.2 (257 kw)	2006.03-2010.05	6AT	Rear	SUV Van 4WD BAR		Propshaft	PS900109
	2006.03-2010.05		Rear	SUV 4WD BAR		Joint,propshaft	602478
	2006.03-2010.05		Centre	SUV 4WD BAR		Center Bearing Support	539903
	2006.03-2010.05		Centre	SUV 4WD BAR		Center Bearing Support Kit	539931S
6.0 (368 kw)	2008.09-2014.05		Centre	SUV 4WD CCGA		Center Bearing Support	539903
RS3 Quattro							
2.5 (294 kw)	2017.04-2020.10		Front	Saloon 4WD DAZA/DNWA		Flexible Coupling Kit	537626S
RS3 Sportback Quattro							
2.5 (250 kw)	2011.01-2012.12	7DCT	Rear	Hatchback 4WD CEPA		Propshaft	PS901920
	2011.01-2012.12		Front	Hatchback 4WD CEPA		Flexible Coupling Kit	537626S
2.5 (270 kw)	2015.02-2016.08	7DCT	Rear	Hatchback 4WD CZGB		Propshaft	PS901920
	2015.02-2016.08		Front	Hatchback 4WD CZGB		Flexible Coupling Kit	537626S
2.5 (294 kw)	2017.04-2020.10	7DCT	Rear	Hatchback 4WD DAZA/DNWA		Propshaft	PS901920
	2017.04-2020.10		Front	Hatchback 4WD DAZA/DNWA		Flexible Coupling Kit	537626S
RS4 Quattro							
4.2 (331 kw)	2012.05-2015.08	7AT	Rear	Estate 4WD CFSA		Propshaft	PS900103
	2012.05-2015.08	7AT	-	Estate 4WD CFSA		Joint,propshaft	602469
RS6 Quattro							
4.2 (331 kw)	2002.07-2004.12		Front	Saloon 4WD BCY		Flexible Coupling	537626
5.0 (426 kw)	2008.04-2010.08	6AT	Rear	Estate 4WD BUH		Propshaft	PS901923
	2008.09-2010.08	6AT	Rear	Saloon 4WD BUH		Propshaft	PS901923
RSQ3 Quattro							
2.5 (228 kw)	2013.05-2018.10		Centre	SUV 4WD CTSA		Center Bearing Support Kit	538695S
	2013.05-2018.10		Front	SUV 4WD CTSA		Flexible Coupling	537626
	2013.05-2018.10		Front	SUV 4WD CTSA		Flexible Coupling Kit	537626S
	2013.05-2018.10		Rear	SUV 4WD CTSA		Flexible Coupling Kit	533882S
2.5 (250 kw)	2013.05-2018.10		Centre	SUV 4WD CZGA		Center Bearing Support Kit	538695S
	2013.05-2018.10		Front	SUV 4WD CZGA		Flexible Coupling	537626
	2013.05-2018.10		Front	SUV 4WD CZGA		Flexible Coupling Kit	537626S
	2013.05-2018.10		Rear	SUV 4WD CZGA		Flexible Coupling Kit	533882S
2.5 (270 kw)	2016.03-2018.10		Front	SUV 4WD CZGB		Flexible Coupling	537626
	2016.03-2018.10		Front	SUV 4WD CZGB		Flexible Coupling Kit	537626S
S1 Quattro							
2.0 (170 kw)	2014.01-2018.10		Rear	Hatchback 4WD CWZA		Flexible Coupling	533882
	2014.01-2018.10		Rear	Hatchback 4WD CWZA		Flexible Coupling Kit	533882S
S1 Sportback Quattro							
2.0 (170 kw)	2014.01-2018.10		Rear	Hatchback 4WD CWZA		Flexible Coupling	533882
	2014.01-2018.10		Rear	Hatchback 4WD CWZA		Flexible Coupling Kit	533882S

	YEAR	TRANSM.	FITTING POSITION	BODY STYLE & DRIVE TYPE & ENGINE	REMARKS	PRODUCT	GSP Ref.
AUDI							
S3 Cabrio Quattro							
2.0 (210 kw)	2014.05-2016.07		Front	Cabriolet 4WD CJXF		Flexible Coupling	537626
	2014.05-2016.07		Rear	Cabriolet 4WD CJXF		Flexible Coupling	533882
	2014.05-2016.07		Front	Cabriolet 4WD CJXF		Flexible Coupling Kit	537626S
	2014.05-2016.07		Rear	Cabriolet 4WD CJXF		Flexible Coupling Kit	533882S
2.0 (221 kw)	2014.05-2020.10		Front	Cabriolet 4WD CJXC/DNUE		Flexible Coupling	537626
	2014.05-2020.10		Rear	Cabriolet 4WD CJXC/DNUE		Flexible Coupling	533882
	2014.05-2020.10		Front	Cabriolet 4WD CJXC/DNUE		Flexible Coupling Kit	537626S
	2014.05-2020.10		Rear	Cabriolet 4WD CJXC/DNUE		Flexible Coupling Kit	533882S
2.0 (228 kw)	2016.07-2020.10		Front	Cabriolet 4WD DJHA		Flexible Coupling	537626
	2016.07-2020.10		Rear	Cabriolet 4WD DJHA		Flexible Coupling	533882
	2016.07-2020.10		Front	Cabriolet 4WD DJHA		Flexible Coupling Kit	537626S
	2016.07-2020.10		Rear	Cabriolet 4WD DJHA		Flexible Coupling Kit	533882S
S3 Quattro							
1.8 (154 kw)	1998.11-2002.04		Front	Hatchback 4WD AMK/APY/AUL	5MT,6MT	Flexible Coupling	537626
	1998.11-2002.04		Front	Hatchback 4WD AMK/APY/AUL	5MT	Flexible Coupling	538507
	1998.11-2002.04		Rear	Hatchback 4WD AMK/APY/AUL		Flexible Coupling	538518
	1998.11-2002.04		Front	Hatchback 4WD AMK/APY/AUL	5MT,6MT	Flexible Coupling Kit	537626S
	1998.11-2002.04		Front	Hatchback 4WD AMK/APY/AUL	5MT	Flexible Coupling Kit	538508S
1.8 (165 kw)	2001.08-2003.06		Front	Hatchback 4WD BAM	5MT,6MT	Flexible Coupling	537626
	2001.08-2003.06		Front	Hatchback 4WD BAM	5MT	Flexible Coupling	538507
	2001.08-2003.06		Rear	Hatchback 4WD BAM		Flexible Coupling	538518
	2001.08-2003.06		Front	Hatchback 4WD BAM	5MT,6MT	Flexible Coupling Kit	537626S
	2001.08-2003.06		Front	Hatchback 4WD BAM	5MT	Flexible Coupling Kit	538508S
2.0 (188 kw)	2007.02-2012.08		Centre	Hatchback 4WD BZC/CDLC		Center Bearing Support Kit	539917S
	2007.02-2012.08		Front	Hatchback 4WD BZC/CDLC		Flexible Coupling	537626
	2007.02-2012.08		Front	Hatchback 4WD BZC/CDLC		Flexible Coupling Kit	537626S
2.0 (195 kw)	2006.11-2012.08		Centre	Hatchback 4WD BHZ/CDLA		Center Bearing Support Kit	539917S
	2006.11-2012.08		Front	Hatchback 4WD BHZ/CDLA		Flexible Coupling	537626
	2006.11-2012.08		Rear	Hatchback 4WD BHZ/CDLA		Flexible Coupling	533882
	2006.11-2012.08		Front	Hatchback 4WD BHZ/CDLA		Flexible Coupling Kit	537626S
	2006.11-2012.08		Rear	Hatchback 4WD BHZ/CDLA		Flexible Coupling Kit	533882S
2.0 (206 kw)	2012.10-2014.05		Front	Hatchback 4WD CJXB		Flexible Coupling	537626
	2012.10-2014.05		Rear	Hatchback 4WD CJXB		Flexible Coupling	533882
	2012.10-2014.05		Front	Hatchback 4WD CJXB		Flexible Coupling Kit	537626S
	2012.10-2014.05		Rear	Hatchback 4WD CJXB		Flexible Coupling Kit	533882S
	2013.10-2014.05		Front	Saloon 4WD CJXB		Flexible Coupling	537626
	2013.10-2014.05		Rear	Saloon 4WD CJXB		Flexible Coupling	533882
	2013.10-2014.05		Front	Saloon 4WD CJXB		Flexible Coupling Kit	537626S
	2013.10-2014.05		Rear	Saloon 4WD CJXB		Flexible Coupling Kit	533882S
2.0 (210 kw)	2014.05-2016.08		Front	Saloon 4WD CJXF		Flexible Coupling	537626
	2014.05-2016.08		Front	Hatchback 4WD CJXF		Flexible Coupling	537626
	2014.05-2016.08		Rear	Saloon 4WD CJXF		Flexible Coupling	533882
	2014.05-2016.08		Rear	Hatchback 4WD CJXF		Flexible Coupling	533882
	2014.05-2016.08		Front	Saloon 4WD CJXF		Flexible Coupling Kit	537626S
	2014.05-2016.08		Front	Hatchback 4WD CJXF		Flexible Coupling Kit	537626S
	2014.05-2016.08		Rear	Saloon 4WD CJXF		Flexible Coupling Kit	533882S
	2014.05-2016.08		Rear	Hatchback 4WD CJXF		Flexible Coupling Kit	533882S
2.0 (213 kw)	2016.07-2017.12		Front	Hatchback 4WD CJXD/DJHB		Flexible Coupling	537626
	2016.07-2017.12		Rear	Hatchback 4WD CJXD/DJHB		Flexible Coupling	533882
	2016.07-2017.12		Front	Hatchback 4WD CJXD/DJHB		Flexible Coupling Kit	537626S
	2016.07-2017.12		Rear	Hatchback 4WD CJXD/DJHB		Flexible Coupling Kit	533882S
	2016.08-2020.10		Front	Saloon 4WD CJXD/DJHB		Flexible Coupling	537626
	2016.08-2020.10		Rear	Saloon 4WD CJXD/DJHB		Flexible Coupling	533882
	2016.08-2020.10		Front	Saloon 4WD CJXD/DJHB		Flexible Coupling Kit	537626S
	2016.08-2020.10		Rear	Saloon 4WD CJXD/DJHB		Flexible Coupling Kit	533882S
2.0 (215 kw)	2014.05-2016.08		Front	Saloon 4WD CYFB		Flexible Coupling	537626
	2014.05-2016.08		Rear	Saloon 4WD CYFB		Flexible Coupling	533882
	2014.05-2016.08		Front	Saloon 4WD CYFB		Flexible Coupling Kit	537626S
	2014.05-2016.08		Rear	Saloon 4WD CYFB		Flexible Coupling Kit	533882S
2.0 (221 kw)	2012.10-2016.08		Front	Hatchback 4WD CJXC		Flexible Coupling	537626
	2012.10-2016.08		Rear	Hatchback 4WD CJXC		Flexible Coupling	533882
	2012.10-2016.08		Front	Hatchback 4WD CJXC		Flexible Coupling Kit	537626S
	2012.10-2016.08		Rear	Hatchback 4WD CJXC		Flexible Coupling Kit	533882S
	2013.05-2020.10		Front	Saloon 4WD CJXC/DNUE		Flexible Coupling	537626

	YEAR	TRANSM.	FITTING POSITION	BODY STYLE & DRIVE TYPE & ENGINE	REMARKS	PRODUCT	GSP Ref.
AUDI							
S3 Quattro							
2.0 (221 kw)	2013.05-2020.10		Rear	Saloon 4WD CJXC/DNUE		Flexible Coupling	533882
	2013.05-2020.10		Front	Saloon 4WD CJXC/DNUE		Flexible Coupling Kit	537626S
	2013.05-2020.10		Rear	Saloon 4WD CJXC/DNUE		Flexible Coupling Kit	533882S
2.0 (228 kw)	2016.06-2017.12		Front	Hatchback 4WD CJXG/DJHA		Flexible Coupling	537626
	2016.06-2017.12		Rear	Hatchback 4WD CJXG/DJHA		Flexible Coupling	533882
	2016.06-2017.12		Front	Hatchback 4WD CJXG/DJHA		Flexible Coupling Kit	537626S
	2016.06-2017.12		Rear	Hatchback 4WD CJXG/DJHA		Flexible Coupling Kit	533882S
	2016.06-2020.10		Front	Saloon 4WD CJXG/DJHA		Flexible Coupling	537626
	2016.06-2020.10		Rear	Saloon 4WD CJXG/DJHA		Flexible Coupling	533882
	2016.06-2020.10		Front	Saloon 4WD CJXG/DJHA		Flexible Coupling Kit	537626S
	2016.06-2020.10		Rear	Saloon 4WD CJXG/DJHA		Flexible Coupling Kit	533882S
S3 Sportback Quattro							
2.0 (188 kw)	2008.07-2013.03		Centre	Hatchback 4WD CDLC		Center Bearing Support Kit	539917S
	2008.07-2013.03		Front	Hatchback 4WD CDLC		Flexible Coupling Kit	537626S
2.0 (195 kw)	2008.07-2013.03		Centre	Hatchback 4WD CDLA		Center Bearing Support Kit	539917S
	2008.07-2013.03		Front	Hatchback 4WD CDLA		Flexible Coupling Kit	537626S
2.0 (206 kw)	2012.10-2014.05		Front	Hatchback 4WD CJXB		Flexible Coupling	537626
	2012.10-2014.05		Rear	Hatchback 4WD CJXB		Flexible Coupling	533882
	2012.10-2014.05		Front	Hatchback 4WD CJXB		Flexible Coupling Kit	537626S
	2012.10-2014.05		Rear	Hatchback 4WD CJXB		Flexible Coupling Kit	533882S
2.0 (210 kw)	2014.05-2016.08		Front	Hatchback 4WD CJXF		Flexible Coupling	537626
	2014.05-2016.08		Rear	Hatchback 4WD CJXF		Flexible Coupling	533882
	2014.05-2016.08		Front	Hatchback 4WD CJXF		Flexible Coupling Kit	537626S
	2014.05-2016.08		Rear	Hatchback 4WD CJXF		Flexible Coupling Kit	533882S
2.0 (213 kw)	2016.07-2020.10		Front	Hatchback 4WD CJXD/DJHB		Flexible Coupling	537626
	2016.07-2020.10		Rear	Hatchback 4WD CJXD/DJHB		Flexible Coupling	533882
	2016.07-2020.10		Front	Hatchback 4WD CJXD/DJHB		Flexible Coupling Kit	537626S
	2016.07-2020.10		Rear	Hatchback 4WD CJXD/DJHB		Flexible Coupling Kit	533882S
2.0 (221 kw)	2013.05-2020.10		Front	Hatchback 4WD CJXC/DNUE		Flexible Coupling	537626
	2013.05-2020.10		Rear	Hatchback 4WD CJXC/DNUE		Flexible Coupling	533882
	2013.05-2020.10		Front	Hatchback 4WD CJXC/DNUE		Flexible Coupling Kit	537626S
	2013.05-2020.10		Rear	Hatchback 4WD CJXC/DNUE		Flexible Coupling Kit	533882S
2.0 (228 kw)	2016.06-2020.10		Front	Hatchback 4WD CJXG/DJHA		Flexible Coupling	537626
	2016.06-2020.10		Rear	Hatchback 4WD CJXG/DJHA		Flexible Coupling	533882
	2016.06-2020.10		Front	Hatchback 4WD CJXG/DJHA		Flexible Coupling Kit	537626S
	2016.06-2020.10		Rear	Hatchback 4WD CJXG/DJHA		Flexible Coupling Kit	533882S
S4 Cabrio Quattro							
4.2 (253 kw)	2005.11-2009.03	MT/AT	Rear	Cabriolet 4WD BBK		Propshaft	PS901422
S4 Quattro							
2.7 (195 kw)	1997.10-2001.09		Front	Saloon 4WD AGB/AZB		Flexible Coupling	537626
3.0 (245 kw)	2009.03-2015.12	6MT	Rear	Estate 4WD CAKA/CCBA/CGWC/CGXC/CREC/CTUB	Date from:2010.03	Propshaft	PS901825
	2009.03-2015.12	6MT	Rear	Saloon 4WD CAKA/CCBA/CGWC/CGXC/CREC/CTUB	Date from:2010.03	Propshaft	PS901825
	2009.03-2015.12	7AT	Rear	Estate 4WD CAKA/CCBA/CGWC/CGXC/CREC/CTUB	Date from:2010.06	Propshaft	PS900103
	2009.03-2015.12	7AT	Rear	Saloon 4WD CAKA/CCBA/CGWC/CGXC/CREC/CTUB	Date from:2010.06	Propshaft	PS900103
	2009.03-2015.12	7AT	Rear	Estate 4WD CAKA/CCBA/CGWC/CGXC/CREC/CTUB	Date to:2010.05	Propshaft	PS901419
	2009.03-2015.12	7AT	-	Estate 4WD CAKA/CCBA/CGWC/CGXC/CREC/CTUB	Date from:2010.06	Joint,propshaft	602469
	2009.03-2015.12	7AT	-	Saloon 4WD CAKA/CCBA/CGWC/CGXC/CREC/CTUB	Date from:2010.06	Joint,propshaft	602469
3.0 (260 kw)	2016.05-2019.10	8AT	Rear	Estate 4WD CWGD		Propshaft	PS901720
	2016.05-2019.11	8AT	Rear	Saloon 4WD CWGD	Date to:2019.11	Propshaft	PS901720
4.2 (253 kw)	2003.03-2004.12		Front	Saloon 4WD BBK		Flexible Coupling	537626
S5 Quattro							
4.2 (260 kw)	2007.06-2012.02	MT/AT	Rear	Coupe 4WD CAUA	Model year from:2005	Propshaft	PS901420
S6 Plus Quattro							
4.2 (240 kw)	1996.06-1997.10		Front	Saloon 4WD AHK		Flexible Coupling	537626
S6 Quattro							
2.2 (169 kw)	1994.06-1997.04		Front	Saloon 4WD AAN		Flexible Coupling	537626
4.0 (309 kw)	2012.04-2015.04	7AT	Rear	Estate 4WD CEUC	Date to:2015.04,for PR code:G1D	Propshaft	PS900581
	2012.04-2015.04	7AT	Rear	Saloon 4WD CEUC	Date to:2015.04,for PR code:G1D	Propshaft	PS900581
	2012.04-2015.04	7AT	Rear	Estate 4WD CEUC	Date to:2015.04,for PR code:G1D	Joint,propshaft	602469
	2012.04-2015.04	7AT	Rear	Saloon 4WD CEUC	Date to:2015.04,for PR code:G1D	Joint,propshaft	602469
	2012.04-2015.04		Centre	Estate 4WD CEUC	539915 and 538609 different structure	Center Bearing Support	539915
	2012.04-2015.04		Centre	Saloon 4WD CEUC	539915 and 538609 different structure	Center Bearing Support	539915
4.0 (331 kw)	2014.10-2018.09	7AT	Rear	Estate 4WD CTGE	for PR code:G1D	Propshaft	PS900581
	2014.10-2018.09	7AT	Rear	Saloon 4WD CTGE	for PR code:G1D	Propshaft	PS900581

	YEAR	TRANSM.	FITTING POSITION	BODY STYLE & DRIVE TYPE & ENGINE	REMARKS	PRODUCT	GSP Ref.
AUDI							
S6 Quattro							
4.0 (331 kw)	2014.10-2018.09	7AT	Rear	Estate 4WD CTGE	for PR code:G1D	Joint,propshaft	602469
	2014.10-2018.09	7AT	Rear	Saloon 4WD CTGE	for PR code:G1D	Joint,propshaft	602469
	2014.10-2018.09		Centre	Estate 4WD CTGE	539915 and 538609 different structure	Center Bearing Support	539915
	2014.10-2018.09		Centre	Saloon 4WD CTGE	539915 and 538609 different structure	Center Bearing Support	539915
4.2 (213 kw)	1994.09-1997.04		Front	Saloon 4WD AEC		Flexible Coupling	537626
4.2 (250 kw)	1999.09-2005.01		Front	Saloon 4WD ANK/AQJ		Flexible Coupling	537626
S7 Sportback Quattro							
4.0 (309 kw)	2012.02-2015.03	7AT	Rear	Hatchback 4WD CEUC	Date from:2013.01,for PR code:G1D	Propshaft	PS900581
	2012.02-2015.03	7AT	Rear	Hatchback 4WD CEUC	Date from:2013.01,for PR code:G1D	Joint,propshaft	602469
	2012.02-2015.03		Centre	Hatchback 4WD CEUC	539915 and 538609 different structure	Center Bearing Support	539915
4.0 (331 kw)	2014.07-2018.05	7AT	Rear	Hatchback 4WD CTGE		Propshaft	PS900581
	2014.07-2018.05	7AT	Rear	Hatchback 4WD CTGE		Joint,propshaft	602469
	2014.07-2018.05		Centre	Hatchback 4WD CTGE	539915 and 538609 different structure	Center Bearing Support	539915
S8 Quattro							
4.0 (382 kw)	2012.02-2018.01	8AT	Rear	Saloon 4WD CGTA/CTFA	For Engine code:CGTA	Propshaft	PS900106
SQ5 Quattro							
3.0 (230 kw)	2012.12-2015.11	8AT	Rear	SUV 4WD CGQB/CVUC		Propshaft	PS900108
	2012.12-2015.11		Rear	SUV 4WD CGQB/CVUC		Joint,propshaft	661093
3.0 (240 kw)	2015.04-2017.05	8AT	Rear	SUV 4WD CVUB		Propshaft	PS900108
3.0 (250 kw)	2015.11-2017.05	8AT	Rear	SUV 4WD DEHA		Propshaft	PS900108
3.0 (260 kw)	2013.05-2017.05	8AT	Rear	SUV 4WD CTUD/CTXA		Propshaft	PS900108
	2013.05-2017.05	8AT	Rear	SUV 4WD CTUD/CTXA		Joint,propshaft	661093
TT Quattro							
1.8 (132 kw)	1998.10-2006.06		Front	Cabriolet 4WD AJQ/ARY/AUQ		Flexible Coupling	537626
	1998.10-2006.06		Front	Coupe 4WD AJQ/ARY/ATC/AUQ		Flexible Coupling	537626
	1998.10-2006.06		Rear	Cabriolet 4WD AJQ/ARY/AUQ		Flexible Coupling	538518
	1998.10-2006.06		Rear	Coupe 4WD AJQ/ARY/ATC/AUQ		Flexible Coupling	538518
	1998.10-2006.06		Front	Cabriolet 4WD AJQ/ARY/AUQ		Flexible Coupling Kit	537626S
	1998.10-2006.06		Front	Coupe 4WD AJQ/ARY/ATC/AUQ		Flexible Coupling Kit	537626S
1.8 (140 kw)	2005.09-2006.06		Front	Cabriolet 4WD BVR		Flexible Coupling	537626
	2005.09-2006.06		Front	Coupe 4WD BVR		Flexible Coupling	537626
	2005.09-2006.06		Rear	Cabriolet 4WD BVR		Flexible Coupling	538518
	2005.09-2006.06		Rear	Coupe 4WD BVR		Flexible Coupling	538518
	2005.09-2006.06		Front	Cabriolet 4WD BVR		Flexible Coupling Kit	537626S
	2005.09-2006.06		Front	Coupe 4WD BVR		Flexible Coupling Kit	537626S
1.8 (165 kw)	1998.10-2006.06		Front	Cabriolet 4WD APX/BAM		Flexible Coupling	537626
	1998.10-2006.06		Front	Coupe 4WD APX/BAM		Flexible Coupling	537626
	1998.10-2006.06		Rear	Cabriolet 4WD APX/BAM		Flexible Coupling	538518
	1998.10-2006.06		Rear	Coupe 4WD APX/BAM		Flexible Coupling	538518
	1998.10-2006.06		Front	Cabriolet 4WD APX/BAM		Flexible Coupling Kit	537626S
	1998.10-2006.06		Front	Coupe 4WD APX/BAM		Flexible Coupling Kit	537626S
1.8 (168 kw)	1999.09-2006.06		Front	Coupe 4WD AMU, BEA		Flexible Coupling	537626
1.8 (180 kw)	2005.03-2006.06		Front	Coupe 4WD BFV		Flexible Coupling	537626
	2005.03-2006.06		Rear	Coupe 4WD BFV		Flexible Coupling	538518
	2005.03-2006.06		Front	Coupe 4WD BFV		Flexible Coupling Kit	537626S
2.0 (135 kw)	2017.01-		Front	Cabriolet 4WD CUNA		Flexible Coupling	537626
	2017.01-		Front	Coupe 4WD CUNA		Flexible Coupling	537626
	2017.01-		Rear	Cabriolet 4WD CUNA		Flexible Coupling	533882
	2017.01-		Rear	Coupe 4WD CUNA		Flexible Coupling	533882
	2017.01-		Front	Cabriolet 4WD CUNA		Flexible Coupling Kit	537626S
	2017.01-		Front	Coupe 4WD CUNA		Flexible Coupling Kit	537626S
	2017.01-		Rear	Cabriolet 4WD CUNA		Flexible Coupling Kit	533882S
	2017.01-		Rear	Coupe 4WD CUNA		Flexible Coupling Kit	533882S
2.0 (155 kw)	2010.05-2014.06	6DCT	Rear	Cabriolet 4WD CESA/CETA		Propshaft	PS901641
2.0 (162 kw)	2015.04-		Front	Coupe 4WD CNTC		Flexible Coupling	537626
	2015.04-		Front	Convertible 4WD CNTC		Flexible Coupling	537626
	2015.04-		Rear	Coupe 4WD CNTC		Flexible Coupling	533882
	2015.04-		Rear	Convertible 4WD CNTC		Flexible Coupling	533882
	2015.04-		Front	Coupe 4WD CNTC		Flexible Coupling Kit	537626S
	2015.04-		Front	Convertible 4WD CNTC		Flexible Coupling Kit	537626S
	2015.04-		Rear	Coupe 4WD CNTC		Flexible Coupling Kit	533882S
	2015.04-		Rear	Convertible 4WD CNTC		Flexible Coupling Kit	533882S
2.0 (169 kw)	2014.07-		Front	Coupe 4WD CHHC		Flexible Coupling	537626
	2014.07-		Rear	Coupe 4WD CHHC		Flexible Coupling	533882

	YEAR	TRANSM.	FITTING POSITION	BODY STYLE & DRIVE TYPE & ENGINE	REMARKS	PRODUCT	GSP Ref.
AUDI							
TT Quattro							
2.0 (169 kw)	2014.07-		Front	Coupe 4WD CHHC		Flexible Coupling Kit	537626S
	2014.07-		Rear	Coupe 4WD CHHC		Flexible Coupling Kit	533882S
	2014.11-		Front	Cabriolet 4WD CHHC		Flexible Coupling	537626
	2014.11-		Rear	Cabriolet 4WD CHHC		Flexible Coupling	533882
	2014.11-		Front	Cabriolet 4WD CHHC		Flexible Coupling Kit	537626S
	2014.11-		Rear	Cabriolet 4WD CHHC		Flexible Coupling Kit	533882S
3.2 (184 kw)	2003.07-2006.12		Front	Cabriolet 4WD BHE/BPF		Flexible Coupling	537626
	2003.07-2006.12		Front	Coupe 4WD BHE/BPF		Flexible Coupling	537626
	2003.07-2006.12		Rear	Cabriolet 4WD BHE/BPF		Flexible Coupling	538518
	2003.07-2006.12		Rear	Coupe 4WD BHE/BPF		Flexible Coupling	538518
	2003.07-2006.12		Front	Cabriolet 4WD BHE/BPF		Flexible Coupling Kit	537626S
	2003.07-2006.12		Front	Coupe 4WD BHE/BPF		Flexible Coupling Kit	537626S
TT Roadster Quattro							
1.8 (134 kw)	1999.10-2002.08		Front	Convertible 4WD AWP		Flexible Coupling	537626
TTS Quattro							
2.0 (210 kw)	2015.02-		Front	Coupe 4WD CJXF		Flexible Coupling	537626
	2015.02-		Front	Cabriolet 4WD CJXF		Flexible Coupling	537626
	2015.02-		Rear	Coupe 4WD CJXF		Flexible Coupling	533882
	2015.02-		Rear	Cabriolet 4WD CJXF		Flexible Coupling	533882
	2015.02-		Front	Coupe 4WD CJXF		Flexible Coupling Kit	537626S
	2015.02-		Front	Cabriolet 4WD CJXF		Flexible Coupling Kit	537626S
	2015.02-		Rear	Coupe 4WD CJXF		Flexible Coupling Kit	533882S
	2015.02-		Rear	Cabriolet 4WD CJXF		Flexible Coupling Kit	533882S
2.0 (215 kw)	2015.07-		Front	Coupe 4WD CYFB		Flexible Coupling	537626
	2015.07-		Rear	Coupe 4WD CYFB		Flexible Coupling	533882
	2015.07-		Front	Coupe 4WD CYFB		Flexible Coupling Kit	537626S
	2015.07-		Rear	Coupe 4WD CYFB		Flexible Coupling Kit	533882S
2.0 (228 kw)	2014.11-		Front	Cabriolet 4WD CJXG		Flexible Coupling	537626
	2014.11-		Front	Coupe 4WD CJXG		Flexible Coupling	537626
	2014.11-		Rear	Cabriolet 4WD CJXG		Flexible Coupling	533882
	2014.11-		Rear	Coupe 4WD CJXG		Flexible Coupling	533882
	2014.11-		Front	Cabriolet 4WD CJXG		Flexible Coupling Kit	537626S
	2014.11-		Front	Coupe 4WD CJXG		Flexible Coupling Kit	537626S
	2014.11-		Rear	Cabriolet 4WD CJXG		Flexible Coupling Kit	533882S
	2014.11-		Rear	Coupe 4WD CJXG		Flexible Coupling Kit	533882S
AUDI (FAW)							
A4L Quattro							
2.0 (155 kw)	2012.08-2014.12	DCT	Rear	Saloon 4WD CADA		Propshaft	PS901372
3.0 (200 kw)	2012.08-2016.12	DCT	Rear	Saloon 4WD CHMB		Propshaft	PS901372
A6L Quattro							
2.8 (162 kw)	2008.09-2012.12		Rear	Saloon 4WD CCEA		Propshaft	PS900572
	2012.01-2016.12	AT	Rear	Saloon 4WD CNYB		Propshaft	PS901371
3.0 (160 kw)	2005.03-2006.12		Rear	Saloon 4WD BBJ		Propshaft	PS900572
3.0 (213 kw)	2008.09-2012.12		Rear	Saloon 4WD CAJA		Propshaft	PS900572
3.0 (220 kw)	2012.01-2014.01	AT	Rear	Saloon 4WD CHMA		Propshaft	PS901371
3.0 (228 kw)	2014.01-2016.12	AT	Rear	Saloon 4WD CTTA		Propshaft	PS901371
3.2 (188 kw)	2005.09-2008.12		Rear	Saloon 4WD AUK		Propshaft	PS900572
4.2 (246 kw)	2005.09-2006.12		Rear	Saloon 4WD BAT		Propshaft	PS900572
4.2 (257 kw)	2006.11-2008.10		Rear	Saloon 4WD BVJ		Propshaft	PS900572
BENTLEY							
Continental Flying Spur							
6.0 (412 kw)	2005.03-2010.05	AT	Rear	Saloon 4WD BEB/BWR		Propshaft	PS901967
6.0 (449 kw)	2008.09-2013.12	AT	Rear	Saloon 4WD BWRA		Propshaft	PS901967
Continental GT							
6.0 (412 kw)	2004.01-2010.12	AT	Rear	Coupe 4WD BEB/BWR		Propshaft	PS901969
6.0 (449 kw)	2006.05-2009.05	AT	Rear	Coupe 4WD BWRA		Propshaft	PS901969
BMW							
114d							
1.5 (70 kw)	2015.06-2019.05		Centre	Hatchback RWD B37D15A		Center Bearing Support	538672
	2015.06-2019.05		Front	Hatchback RWD B37D15A	510596 and 537625 different structure	Flexible Coupling	510596
	2015.06-2019.05		Front	Hatchback RWD B37D15A	537625 and 510596 different structure	Flexible Coupling	537625
	2015.06-2019.05		Front	Hatchback RWD B37D15A		Flexible Coupling Kit	510596S
	2015.06-2019.05		Front	Hatchback RWD B37D15A		Flexible Coupling Kit	537625S
	2015.07-2019.06		Centre	Hatchback RWD B37D15A		Center Bearing Support	538672

	YEAR	TRANSM.	FITTING POSITION	BODY STYLE & DRIVE TYPE & ENGINE	REMARKS	PRODUCT	GSP Ref.
BMW							
114d							
1.5 (70 kw)	2015.07-2019.06		Front	Hatchback RWD B37D15A	510596 and 537625 different structure	Flexible Coupling	510596
	2015.07-2019.06		Front	Hatchback RWD B37D15A	537625 and 510596 different structure	Flexible Coupling	537625
	2015.07-2019.06		Front	Hatchback RWD B37D15A		Flexible Coupling Kit	510596S
	2015.07-2019.06		Front	Hatchback RWD B37D15A		Flexible Coupling Kit	537625S
1.6 (70 kw)	2012.07-2019.05		Centre	Hatchback RWD N47D16A		Center Bearing Support	538672
	2012.07-2019.05		Front	Hatchback RWD N47D16A		Flexible Coupling	510596
	2012.07-2019.05		Front	Hatchback RWD N47D16A		Flexible Coupling	537625
	2012.07-2019.05		Front	Hatchback RWD N47D16A		Flexible Coupling Kit	510596S
	2012.07-2019.05		Front	Hatchback RWD N47D16A		Flexible Coupling Kit	537625S
	2012.11-2015.06		Centre	Hatchback RWD N47D16A		Center Bearing Support	538672
	2012.11-2015.06		Front	Hatchback RWD N47D16A		Flexible Coupling	510596
	2012.11-2015.06		Front	Hatchback RWD N47D16A		Flexible Coupling	537625
	2012.11-2015.06		Front	Hatchback RWD N47D16A		Flexible Coupling Kit	510596S
	2012.11-2015.06		Front	Hatchback RWD N47D16A		Flexible Coupling Kit	537625S
114i							
1.6 (75 kw)	2012.07-2015.01		Centre	Hatchback RWD N13B16A		Center Bearing Support	538672
	2012.07-2015.01		Front	Hatchback RWD N13B16A		Flexible Coupling	510597
	2012.07-2015.01		Front	Hatchback RWD N13B16A		Flexible Coupling	537625
	2012.07-2015.01		Front	Hatchback RWD N13B16A	Bolt Hole Centres:78mm	Flexible Coupling Kit	510597S
	2012.07-2015.01		Front	Hatchback RWD N13B16A	Bolt Hole Centres:96mm	Flexible Coupling Kit	537625S
	2012.07-2015.02		Centre	Hatchback RWD N13B16A		Center Bearing Support	538672
	2012.07-2015.02		Front	Hatchback RWD N13B16A		Flexible Coupling	510597
	2012.07-2015.02		Front	Hatchback RWD N13B16A		Flexible Coupling	537625
	2012.07-2015.02		Front	Hatchback RWD N13B16A	Bolt Hole Centres:78mm	Flexible Coupling Kit	510597S
	2012.07-2015.02		Front	Hatchback RWD N13B16A	Bolt Hole Centres:96mm	Flexible Coupling Kit	537625S
116d							
1.5 (85 kw)	2015.03-2019.05		Centre	Hatchback RWD B37D15A		Center Bearing Support	538672
	2015.03-2019.05		Front	Hatchback RWD B37D15A	510596 and 537625 different structure	Flexible Coupling	510596
	2015.03-2019.05		Front	Hatchback RWD B37D15A	537625 and 510596 different structure	Flexible Coupling	537625
	2015.03-2019.05		Front	Hatchback RWD B37D15A		Flexible Coupling Kit	510596S
	2015.03-2019.05		Front	Hatchback RWD B37D15A		Flexible Coupling Kit	537625S
	2015.03-2019.06		Centre	Hatchback RWD B37D15A		Center Bearing Support	538672
	2015.03-2019.06		Front	Hatchback RWD B37D15A	510596 and 537625 different structure	Flexible Coupling	510596
	2015.03-2019.06		Front	Hatchback RWD B37D15A	537625 and 510596 different structure	Flexible Coupling	537625
	2015.03-2019.06		Front	Hatchback RWD B37D15A		Flexible Coupling Kit	510596S
	2015.03-2019.06		Front	Hatchback RWD B37D15A		Flexible Coupling Kit	537625S
1.6 (85 kw)	2012.02-2015.02		Centre	Hatchback RWD N47D16A		Center Bearing Support	538672
	2012.02-2015.02		Front	Hatchback RWD N47D16A		Flexible Coupling	510596
	2012.02-2015.02		Front	Hatchback RWD N47D16A		Flexible Coupling	537625
	2012.02-2015.02		Front	Hatchback RWD N47D16A		Flexible Coupling Kit	510596S
	2012.02-2015.02		Front	Hatchback RWD N47D16A		Flexible Coupling Kit	537625S
	2012.03-2015.02		Centre	Hatchback RWD N47D16A		Center Bearing Support	538672
	2012.03-2015.02		Front	Hatchback RWD N47D16A		Flexible Coupling	510596
	2012.03-2015.02		Front	Hatchback RWD N47D16A		Flexible Coupling	537625
	2012.03-2015.02		Front	Hatchback RWD N47D16A		Flexible Coupling Kit	510596S
	2012.03-2015.02		Front	Hatchback RWD N47D16A		Flexible Coupling Kit	537625S
2.0 (66 kw)	2011.01-2011.12	MT	Rear	Hatchback RWD N47D20C		Propshaft	PS900610
	2011.01-2011.12		Centre	Hatchback RWD N47D20C		Center Bearing Support	538672
	2011.01-2011.12		Front	Hatchback RWD N47D20C		Flexible Coupling	510596
	2011.01-2011.12		Front	Hatchback RWD N47D20C	510596 and 537625 different structure	Flexible Coupling	510596
	2011.01-2011.12		Front	Hatchback RWD N47D20C	537625 and 510596 different structure	Flexible Coupling	537625
	2011.01-2011.12		Rear	Hatchback RWD N47D20C		Flexible Coupling	533878
	2011.01-2011.12		Front	Hatchback RWD N47D20C		Flexible Coupling Kit	510596S
	2011.01-2011.12		Rear	Hatchback RWD N47D20C		Flexible Coupling Kit	538112S
2.0 (85 kw)	2009.03-2011.06	MT	Rear	Hatchback RWD N47D20A/N47D20C		Propshaft	PS900610
	2009.03-2011.06		Centre	Hatchback RWD N47D20A/N47D20C		Center Bearing Support	538672
	2009.03-2011.06		Front	Hatchback RWD N47D20A/N47D20C	510596 and 537625 different structure	Flexible Coupling	510596
	2009.03-2011.06		Front	Hatchback RWD N47D20A/N47D20C	537625 and 510596 different structure	Flexible Coupling	537625
	2009.03-2011.06		Rear	Hatchback RWD N47D20A/N47D20C		Flexible Coupling	533878
	2009.03-2011.06		Front	Hatchback RWD N47D20A/N47D20C		Flexible Coupling Kit	510596S
	2009.03-2011.06		Rear	Hatchback RWD N47D20A/N47D20C		Flexible Coupling Kit	538112S
	2009.03-2012.09	MT	Rear	Hatchback RWD N47D20A/N47D20C		Propshaft	PS900610
	2009.03-2012.09		Centre	Hatchback RWD N47D20A/N47D20C		Center Bearing Support	538672
	2009.03-2012.09		Front	Hatchback RWD N47D20A/N47D20C		Flexible Coupling	510596

	YEAR	TRANSM.	FITTING POSITION	BODY STYLE & DRIVE TYPE & ENGINE	REMARKS	PRODUCT	GSP Ref.
BMW							
116d							
2.0 (85 kw)	2009.03-2012.09		Rear	Hatchback RWD N47D20A/N47D20C		Flexible Coupling	533878
	2009.03-2012.09		Front	Hatchback RWD N47D20A/N47D20C		Flexible Coupling Kit	510596S
	2009.03-2012.09		Rear	Hatchback RWD N47D20A/N47D20C		Flexible Coupling Kit	538112S
	2011.07-2015.02		Centre	Hatchback RWD N47D20C		Center Bearing Support	538672
	2011.07-2015.02		Front	Hatchback RWD N47D20C		Flexible Coupling	510596
	2011.07-2015.02		Front	Hatchback RWD N47D20C		Flexible Coupling	537625
	2011.07-2015.02		Front;Rear	Hatchback RWD N47D20C		Flexible Coupling	517955
	2011.07-2015.02		Front	Hatchback RWD N47D20C		Flexible Coupling Kit	510596S
	2011.07-2015.02		Front	Hatchback RWD N47D20C		Flexible Coupling Kit	537625S
	2012.07-2015.02		Centre	Hatchback RWD N47D20C		Center Bearing Support	538672
	2012.07-2015.02		Front	Hatchback RWD N47D20C		Flexible Coupling	510596
	2012.07-2015.02		Front	Hatchback RWD N47D20C		Flexible Coupling	537625
	2012.07-2015.02		Front	Hatchback RWD N47D20C		Flexible Coupling Kit	510596S
	2012.07-2015.02		Front	Hatchback RWD N47D20C		Flexible Coupling Kit	537625S
116i							
1.5 (80 kw)	2015.03-2019.06		Centre	Hatchback RWD B38B15A		Center Bearing Support	538672
	2015.03-2019.06		Front	Hatchback RWD B38B15A	510596 and 537625 different structure	Flexible Coupling	510596
	2015.03-2019.06		Front	Hatchback RWD B38B15A	MT	Flexible Coupling	510597
	2015.03-2019.06		Front	Hatchback RWD B38B15A	537625 and 510596 different structure	Flexible Coupling	537625
	2015.03-2019.06		Front	Hatchback RWD B38B15A	Inner diameter:50mm,510596S and 537625S different structure	Flexible Coupling Kit	510596S
	2015.03-2019.06		Front	Hatchback RWD B38B15A	Inner diameter:38.5mm	Flexible Coupling Kit	510597S
	2015.03-2019.06		Front	Hatchback RWD B38B15A	Inner diameter:50mm,537625S and 510596S different structure	Flexible Coupling Kit	537625S
1.6 (85 kw)	2004.06-2011.06	5MT/6MT	Rear	Hatchback RWD N45B16A	Date from:2006.03	Propshaft	PS901709
	2004.06-2011.06	AT	Rear	Hatchback RWD N45B16A	Model year to:2007	Propshaft	PS901439
	2004.06-2011.06		Centre	Hatchback RWD N45B16A		Center Bearing Support	538672
	2004.06-2011.06		Front	Hatchback RWD N45B16A	Inner diameter:50mm,510596 and 537625 different structure	Flexible Coupling	510596
	2004.06-2011.06		Front	Hatchback RWD N45B16A	Inner diameter:38.5mm	Flexible Coupling	510641
	2004.06-2011.06		Front	Hatchback RWD N45B16A	Inner diameter:50mm,537625 and 510596 different structure	Flexible Coupling	537625
	2004.06-2011.06		Front	Hatchback RWD N45B16A		Flexible Coupling Kit	510596S
	2004.06-2011.06		Front	Hatchback RWD N45B16A		Flexible Coupling Kit	510641S
	2007.09-2011.12	6MT	Rear	Hatchback RWD N45B16A		Propshaft	PS901709
	2007.09-2011.12		Centre	Hatchback RWD N45B16A		Center Bearing Support	538672
	2007.09-2011.12		Front	Hatchback RWD N45B16A	Inner diameter:50mm,510596 and 537625 different structure	Flexible Coupling	510596
	2007.09-2011.12		Front	Hatchback RWD N45B16A	Inner diameter:38.5mm	Flexible Coupling	510641
	2007.09-2011.12		Front	Hatchback RWD N45B16A	Inner diameter:50mm,537625 and 510596 different structure	Flexible Coupling	537625
	2007.09-2011.12		Front	Hatchback RWD N45B16A		Flexible Coupling Kit	510596S
	2007.09-2011.12		Front	Hatchback RWD N45B16A		Flexible Coupling Kit	510641S
1.6 (90 kw)	2007.03-2011.12	AT	Rear	Hatchback RWD N43B16AA		Propshaft	PS901439
	2007.03-2011.12		Centre	Hatchback RWD N43B16AA		Center Bearing Support	538672
	2007.03-2011.12		Front	Hatchback RWD N43B16AA	Inner diameter:50mm,510596 and 537625 different structure	Flexible Coupling	510596
	2007.03-2011.12		Front	Hatchback RWD N43B16AA	Inner diameter:38.5mm	Flexible Coupling	510641
	2007.03-2011.12		Front	Hatchback RWD N43B16AA	Inner diameter:50mm,537625 and 510596 different structure	Flexible Coupling	537625
	2007.03-2011.12		Front	Hatchback RWD N43B16AA		Flexible Coupling Kit	510596S
	2007.03-2011.12		Front	Hatchback RWD N43B16AA		Flexible Coupling Kit	510641S
	2007.09-2011.06	6MT	Rear	Hatchback RWD N43B16AA		Propshaft	PS901709
	2007.09-2011.06		Centre	Hatchback RWD N43B16AA		Center Bearing Support	538672
	2007.09-2011.06		Front	Hatchback RWD N43B16AA	Inner diameter:50mm,510596 and 537625 different structure	Flexible Coupling	510596
	2007.09-2011.06		Front	Hatchback RWD N43B16AA	Inner diameter:38.5mm	Flexible Coupling	510641
	2007.09-2011.06		Front	Hatchback RWD N43B16AA	Inner diameter:50mm,537625 and 510596 different structure	Flexible Coupling	537625
	2007.09-2011.06		Front	Hatchback RWD N43B16AA		Flexible Coupling Kit	510596S
	2007.09-2011.06		Front	Hatchback RWD N43B16AA		Flexible Coupling Kit	510641S
1.6 (100 kw)	2011.07-2015.02	AT	Rear	Hatchback RWD N13B16A		Propshaft	PS901438
	2011.07-2015.02		Centre	Hatchback RWD N13B16A		Center Bearing Support	538672
	2011.07-2015.02		Front	Hatchback RWD N13B16A		Flexible Coupling	510596
	2011.07-2015.02		Front	Hatchback RWD N13B16A		Flexible Coupling	510597
	2011.07-2015.02		Front	Hatchback RWD N13B16A		Flexible Coupling	537625
	2011.07-2015.02		Front	Hatchback RWD N13B16A	Inner diameter:50mm,510596S and 537625S different structure	Flexible Coupling Kit	510596S
	2011.07-2015.02		Front	Hatchback RWD N13B16A	Inner diameter:38.5mm	Flexible Coupling Kit	510597S
	2011.07-2015.02		Front	Hatchback RWD N13B16A	Inner diameter:50mm,537625S and 510596S different structure	Flexible Coupling Kit	537625S
	2011.12-2015.02	AT	Rear	Hatchback RWD N13B16A	Model year to:2015	Propshaft	PS901438
	2011.12-2015.02		Centre	Hatchback RWD N13B16A		Center Bearing Support	538672
	2011.12-2015.02		Front	Hatchback RWD N13B16A		Flexible Coupling	510596
	2011.12-2015.02		Front	Hatchback RWD N13B16A		Flexible Coupling	510597
	2011.12-2015.02		Front	Hatchback RWD N13B16A		Flexible Coupling	537625

	YEAR	TRANSM.	FITTING POSITION	BODY STYLE & DRIVE TYPE & ENGINE	REMARKS	PRODUCT	GSP Ref.
BMW							
116i							
1.6 (100 kw)	2011.12-2015.02		Front	Hatchback RWD N13B16A	Inner diameter:50mm,510596S and 537625S different structure	Flexible Coupling Kit	510596S
	2011.12-2015.02		Front	Hatchback RWD N13B16A	Inner diameter:38.5mm	Flexible Coupling Kit	510597S
	2011.12-2015.02		Front	Hatchback RWD N13B16A	Inner diameter:50mm,537625S and 510596S different structure	Flexible Coupling Kit	537625S
2.0 (90 kw)	2007.10-2012.09	6MT	Rear	Hatchback RWD N43B20A	Date to:2011.06	Propshaft	PS901709
	2007.10-2012.09		Centre	Hatchback RWD N43B20A		Center Bearing Support	538672
	2007.10-2012.09		Front	Hatchback RWD N43B20A	Inner diameter:50mm,510596 and 537625 different structure	Flexible Coupling	510596
	2007.10-2012.09		Front	Hatchback RWD N43B20A	Inner diameter:38.5mm	Flexible Coupling	510641
	2007.10-2012.09		Front	Hatchback RWD N43B20A	Inner diameter:50mm,537625 and 510596 different structure	Flexible Coupling	537625
	2007.10-2012.09		Front	Hatchback RWD N43B20A		Flexible Coupling Kit	510596S
	2007.10-2012.09		Front	Hatchback RWD N43B20A		Flexible Coupling Kit	510641S
	2009.01-2012.09	AT	Rear	Hatchback RWD N43B20A		Propshaft	PS901439
	2009.01-2012.09		Centre	Hatchback RWD N43B20A		Center Bearing Support	538672
	2009.01-2012.09		Front	Hatchback RWD N43B20A	Inner diameter:50mm,510596 and 537625 different structure	Flexible Coupling	510596
	2009.01-2012.09		Front	Hatchback RWD N43B20A	Inner diameter:38.5mm	Flexible Coupling	510641
	2009.01-2012.09		Front	Hatchback RWD N43B20A	Inner diameter:50mm,537625 and 510596 different structure	Flexible Coupling	537625
	2009.01-2012.09		Front	Hatchback RWD N43B20A		Flexible Coupling Kit	510596S
	2009.01-2012.09		Front	Hatchback RWD N43B20A		Flexible Coupling Kit	510641S
118d							
2.0 (90 kw)	2004.06-2007.02	MT	Rear	Hatchback RWD M47D204D4		Propshaft	PS900610
	2004.06-2007.02		Centre	Hatchback RWD M47D204D4		Center Bearing Support	538672
	2004.06-2007.02		Front	Hatchback RWD M47D204D4	510596 and 537625 different structure	Flexible Coupling	510596
	2004.06-2007.02		Front	Hatchback RWD M47D204D4	537625 and 510596 different structure	Flexible Coupling	537625
	2004.06-2007.02		Rear	Hatchback RWD M47D204D4		Flexible Coupling	533878
	2004.06-2007.02		Front	Hatchback RWD M47D204D4		Flexible Coupling Kit	510596S
2.0 (100 kw)	2006.09-2012.09	AT	Rear	Hatchback RWD N47D20C		Propshaft	PS901634
	2006.09-2012.09	MT	Rear	Hatchback RWD N47D20C		Propshaft	PS900610
	2006.09-2012.09		Centre	Hatchback RWD N47D20C		Center Bearing Support	538672
	2006.09-2012.09		Front	Hatchback RWD N47D20C		Flexible Coupling	510596
	2006.09-2012.09		Rear	Hatchback RWD N47D20C		Flexible Coupling	533878
	2006.09-2012.09		Rear	Hatchback RWD N47D20C		Flexible Coupling Kit	538112S
	2007.03-2011.06	AT	Rear	Hatchback RWD N47D20A/N47D20C		Propshaft	PS901634
	2007.03-2011.06	MT	Rear	Hatchback RWD N47D20A/N47D20C		Propshaft	PS900610
	2007.03-2011.06		Centre	Hatchback RWD N47D20A/N47D20C		Center Bearing Support	538672
	2007.03-2011.06		Front	Hatchback RWD N47D20A/N47D20C	510596 and 537625 different structure	Flexible Coupling	510596
	2007.03-2011.06		Front	Hatchback RWD N47D20A/N47D20C	537625 and 510596 different structure	Flexible Coupling	537625
	2007.03-2011.06		Rear	Hatchback RWD N47D20A/N47D20C		Flexible Coupling	533878
	2007.03-2011.06		Front	Hatchback RWD N47D20A/N47D20C		Flexible Coupling Kit	510596S
	2007.03-2011.06		Rear	Hatchback RWD N47D20A/N47D20C		Flexible Coupling Kit	538112S
	2011.07-2019.06	AT	Rear	Hatchback RWD B47D20A/N47D20C		Propshaft	PS900611
	2011.07-2019.06		Centre	Hatchback RWD B47D20A/N47D20C		Center Bearing Support	538672
	2011.07-2019.06		Front	Hatchback RWD B47D20A/N47D20C		Flexible Coupling	510596
	2011.07-2019.06		Front	Hatchback RWD B47D20A/N47D20C		Flexible Coupling	537625
	2011.07-2019.06		Front	Hatchback RWD B47D20A/N47D20C		Flexible Coupling Kit	510596S
	2011.07-2019.06		Front	Hatchback RWD B47D20A/N47D20C		Flexible Coupling Kit	537625S
	2011.12-2019.06		Centre	Hatchback RWD B47D20A/N47D20C		Center Bearing Support	538672
	2011.12-2019.06		Front	Hatchback RWD B47D20A/N47D20C		Flexible Coupling	510596
	2011.12-2019.06		Front	Hatchback RWD B47D20A/N47D20C		Flexible Coupling	537625
	2011.12-2019.06		Front	Hatchback RWD B47D20A/N47D20C		Flexible Coupling Kit	510596S
	2011.12-2019.06		Front	Hatchback RWD B47D20A/N47D20C		Flexible Coupling Kit	537625S
2.0 (105 kw)	2007.03-2011.06	AT	Rear	Hatchback RWD N47D20A/N47D20C		Propshaft	PS901634
	2007.03-2011.06	MT	Rear	Hatchback RWD N47D20A/N47D20C		Propshaft	PS900610
	2007.03-2011.06		Centre	Hatchback RWD N47D20A/N47D20C		Center Bearing Support	538672
	2007.03-2011.06		Front	Hatchback RWD N47D20A/N47D20C	510596 and 537625 different structure	Flexible Coupling	510596
	2007.03-2011.06		Front	Hatchback RWD N47D20A/N47D20C	537625 and 510596 different structure	Flexible Coupling	537625
	2007.03-2011.06		Rear	Hatchback RWD N47D20A/N47D20C		Flexible Coupling	533878
	2007.03-2011.06		Front	Hatchback RWD N47D20A/N47D20C		Flexible Coupling Kit	510596S
	2007.03-2011.06		Rear	Hatchback RWD N47D20A/N47D20C		Flexible Coupling Kit	538112S
	2007.03-2012.09	AT	Rear	Hatchback RWD N47D20A/N47D20C		Propshaft	PS901634
	2007.03-2012.09	MT	Rear	Hatchback RWD N47D20A/N47D20C		Propshaft	PS900610
	2007.03-2012.09		Centre	Hatchback RWD N47D20A/N47D20C		Center Bearing Support	538672
	2007.03-2012.09		Front	Hatchback RWD N47D20A/N47D20C	510596 and 537625 different structure	Flexible Coupling	510596
	2007.03-2012.09		Front	Hatchback RWD N47D20A/N47D20C	537625 and 510596 different structure	Flexible Coupling	537625
	2007.03-2012.09		Rear	Hatchback RWD N47D20A/N47D20C		Flexible Coupling	533878
	2007.03-2012.09		Front	Hatchback RWD N47D20A/N47D20C		Flexible Coupling Kit	510596S

	YEAR	TRANSM.	FITTING POSITION	BODY STYLE & DRIVE TYPE & ENGINE	REMARKS	PRODUCT	GSP Ref.
BMW							
118d							
2.0 (105 kw)	2007.03-2012.09		Rear	Hatchback RWD N47D20A/N47D20C		Flexible Coupling Kit	538112S
	2011.06-2015.02		Centre	Hatchback RWD N47D20C		Center Bearing Support	538672
	2011.06-2015.02		Front	Hatchback RWD N47D20C		Flexible Coupling	510596
	2011.06-2015.02		Front	Hatchback RWD N47D20C		Flexible Coupling	537625
	2011.06-2015.02		Front	Hatchback RWD N47D20C		Flexible Coupling Kit	510596S
	2011.06-2015.02		Front	Hatchback RWD N47D20C		Flexible Coupling Kit	537625S
	2011.07-2015.02		Centre	Hatchback RWD N47D20C		Center Bearing Support	538672
	2011.07-2015.02		Front	Hatchback RWD N47D20C		Flexible Coupling	510596
	2011.07-2015.02		Front	Hatchback RWD N47D20C		Flexible Coupling	537625
	2011.07-2015.02		Front;Rear	Hatchback RWD N47D20C		Flexible Coupling	517955
	2011.07-2015.02		Front	Hatchback RWD N47D20C		Flexible Coupling Kit	510596S
	2011.07-2015.02		Front	Hatchback RWD N47D20C		Flexible Coupling Kit	537625S
2.0 (110 kw)	2015.03-2019.06	AT	Rear	Hatchback RWD B47D20A		Propshaft	PS900611
	2015.03-2019.06	AT	Rear	Hatchback Van RWD B47D20A		Propshaft	PS900611
	2015.03-2019.06		Centre	Hatchback RWD B47D20A		Center Bearing Support	538672
	2015.03-2019.06		Front	Hatchback RWD B47D20A		Flexible Coupling	510596
	2015.03-2019.06		Front	Hatchback RWD B47D20A		Flexible Coupling	537625
	2015.03-2019.06		Front	Hatchback RWD B47D20A		Flexible Coupling Kit	510596S
	2015.03-2019.06		Front	Hatchback RWD B47D20A		Flexible Coupling Kit	537625S
118d Cabrio							
2.0 (100 kw)	2008.09-2013.12	AT	Rear	Cabriolet RWD N47D20A		Propshaft	PS901634
	2008.09-2013.12	MT	Rear	Cabriolet RWD N47D20A		Propshaft	PS900610
	2008.09-2013.12		Centre	Cabriolet RWD N47D20A		Center Bearing Support	538672
	2008.09-2013.12		Front	Cabriolet RWD N47D20A		Flexible Coupling	510596
	2008.09-2013.12		Rear	Cabriolet RWD N47D20A		Flexible Coupling	533878
	2008.09-2013.12		Rear	Cabriolet RWD N47D20A		Flexible Coupling Kit	538112S
2.0 (105 kw)	2008.09-2013.12	AT	Rear	Cabriolet RWD N47D20A/N47D20C		Propshaft	PS901634
	2008.09-2013.12	MT	Rear	Cabriolet RWD N47D20A/N47D20C		Propshaft	PS900610
	2008.09-2013.12		Centre	Cabriolet RWD N47D20A/N47D20C		Center Bearing Support	538672
	2008.09-2013.12		Front	Cabriolet RWD N47D20A/N47D20C		Flexible Coupling	510596
	2008.09-2013.12		Rear	Cabriolet RWD N47D20A/N47D20C		Flexible Coupling	533878
	2008.09-2013.12		Front	Cabriolet RWD N47D20A/N47D20C		Flexible Coupling Kit	510596S
	2008.09-2013.12		Rear	Cabriolet RWD N47D20A/N47D20C		Flexible Coupling Kit	538112S
118d Coupe							
2.0 (100 kw)	2009.09-2013.10	AT	Rear	Coupe RWD N47D20C		Propshaft	PS901634
	2009.09-2013.10	MT	Rear	Coupe RWD N47D20C		Propshaft	PS900610
	2009.09-2013.10		Centre	Coupe RWD N47D20C		Center Bearing Support	538672
	2009.09-2013.10		Front	Coupe RWD N47D20C		Flexible Coupling	510596
	2009.09-2013.10		Rear	Coupe RWD N47D20C		Flexible Coupling	533878
	2009.09-2013.10		Rear	Coupe RWD N47D20C		Flexible Coupling Kit	538112S
2.0 (105 kw)	2009.09-2013.10	AT	Rear	Coupe RWD N47D20C		Propshaft	PS901634
	2009.09-2013.10	MT	Rear	Coupe RWD N47D20C		Propshaft	PS900610
	2009.09-2013.10		Centre	Coupe RWD N47D20C		Center Bearing Support	538672
	2009.09-2013.10		Front	Coupe RWD N47D20C	510596 and 537625 different structure	Flexible Coupling	510596
	2009.09-2013.10		Front	Coupe RWD N47D20C	537625 and 510596 different structure	Flexible Coupling	537625
	2009.09-2013.10		Rear	Coupe RWD N47D20C		Flexible Coupling	533878
	2009.09-2013.10		Front	Coupe RWD N47D20C		Flexible Coupling Kit	510596S
	2009.09-2013.10		Rear	Coupe RWD N47D20C		Flexible Coupling Kit	538112S
118d xDrive							
2.0 (105 kw)	2013.07-2015.02		Centre	Hatchback 4WD N47D20C		Center Bearing Support	538672
	2013.07-2015.02		Front	Hatchback 4WD N47D20C	510596 and 537625 different structure	Flexible Coupling	510596
	2013.07-2015.02		Front	Hatchback 4WD N47D20C	537625 and 510596 different structure	Flexible Coupling	537625
	2013.07-2015.02		Front;Rear	Hatchback 4WD N47D20C		Flexible Coupling	517955
	2013.07-2015.02		Front	Hatchback 4WD N47D20C	510596S and 537625S different structure	Flexible Coupling Kit	510596S
	2013.07-2015.02		Front	Hatchback 4WD N47D20C	537625S and 510596S different structure	Flexible Coupling Kit	537625S
	2013.07-2015.02		Front;Rear	Hatchback 4WD N47D20C		Flexible Coupling Kit	517955S
2.0 (110 kw)	2015.03-2019.05		Centre	Hatchback 4WD B47D20A		Center Bearing Support	538672
	2015.03-2019.05		Front	Hatchback 4WD B47D20A	510596 and 537625 different structure	Flexible Coupling	510596
	2015.03-2019.05		Front	Hatchback 4WD B47D20A	537625 and 510596 different structure	Flexible Coupling	537625
	2015.03-2019.05		Front;Rear	Hatchback 4WD B47D20A		Flexible Coupling	517955
	2015.03-2019.05		Front	Hatchback 4WD B47D20A	510596S and 537625S different structure	Flexible Coupling Kit	510596S
	2015.03-2019.05		Front	Hatchback 4WD B47D20A	537625S and 510596S different structure	Flexible Coupling Kit	537625S
	2015.03-2019.05		Front;Rear	Hatchback 4WD B47D20A		Flexible Coupling Kit	517955S
	2015.03-2019.06		Centre	Hatchback 4WD B47D20A		Center Bearing Support	538672

	YEAR	TRANSM.	FITTING POSITION	BODY STYLE & DRIVE TYPE & ENGINE	REMARKS	PRODUCT	GSP Ref.
BMW							
118d xDrive							
2.0 (110 kw)	2015.03-2019.06		Front	Hatchback 4WD B47D20A		Flexible Coupling	510596
	2015.03-2019.06		Front	Hatchback 4WD B47D20A		Flexible Coupling	537625
	2015.03-2019.06		Front;Rear	Hatchback 4WD B47D20A		Flexible Coupling	517955
	2015.03-2019.06		Front	Hatchback 4WD B47D20A	510596S and 537625S different structure	Flexible Coupling Kit	510596S
	2015.03-2019.06		Front	Hatchback 4WD B47D20A	537625S and 510596S different structure	Flexible Coupling Kit	537625S
	2015.03-2019.06		Front;Rear	Hatchback 4WD B47D20A		Flexible Coupling Kit	517955S
118i							
1.5 (100 kw)	2015.03-2019.06		Centre	Hatchback RWD B38B15A		Center Bearing Support	538672
	2015.03-2019.06		Front	Hatchback RWD B38B15A	AT,Inner diameter:50mm,510596 and 537625 different structure	Flexible Coupling	510596
	2015.03-2019.06		Front	Hatchback RWD B38B15A	MT,Inner diameter:38.5mm	Flexible Coupling	510597
	2015.03-2019.06		Front	Hatchback RWD B38B15A	AT,Inner diameter:50mm,510596 and 537625 different structure	Flexible Coupling	537625
	2015.03-2019.06		Front	Hatchback RWD B38B15A	Inner diameter:50mm,510596S and 537625S different structure	Flexible Coupling Kit	510596S
	2015.03-2019.06		Front	Hatchback RWD B38B15A	Inner diameter:38.5mm	Flexible Coupling Kit	510597S
	2015.03-2019.06		Front	Hatchback RWD B38B15A	Inner diameter:50mm,537625S and 510596S different structure	Flexible Coupling Kit	537625S
	2015.07-2019.06		Centre	Hatchback RWD B38B15A		Center Bearing Support	538672
	2015.07-2019.06		Front	Hatchback RWD B38B15A	AT,Inner diameter:50mm,510596 and 537625 different structure	Flexible Coupling	510596
	2015.07-2019.06		Front	Hatchback RWD B38B15A	MT,Inner diameter:38.5mm	Flexible Coupling	510597
	2015.07-2019.06		Front	Hatchback RWD B38B15A	AT,Inner diameter:50mm,510596 and 537625 different structure	Flexible Coupling	537625
	2015.07-2019.06		Front	Hatchback RWD B38B15A	Inner diameter:50mm,510596S and 537625S different structure	Flexible Coupling Kit	510596S
	2015.07-2019.06		Front	Hatchback RWD B38B15A	Inner diameter:38.5mm	Flexible Coupling Kit	510597S
	2015.07-2019.06		Front	Hatchback RWD B38B15A	Inner diameter:50mm,537625S and 510596S different structure	Flexible Coupling Kit	537625S
1.6 (100 kw)	2015.03-2015.06		Centre	Hatchback RWD N13B16A		Center Bearing Support	538672
	2015.03-2015.06		Front	Hatchback RWD N13B16A	AT,Inner diameter:50mm,510596 and 537625 different structure	Flexible Coupling	510596
	2015.03-2015.06		Front	Hatchback RWD N13B16A	MT,Inner diameter:38.5mm	Flexible Coupling	510597
	2015.03-2015.06		Front	Hatchback RWD N13B16A	AT,Inner diameter:50mm,510596 and 537625 different structure	Flexible Coupling	537625
	2015.03-2015.06		Front	Hatchback RWD N13B16A	Inner diameter:50mm,510596S and 537625S different structure	Flexible Coupling Kit	510596S
	2015.03-2015.06		Front	Hatchback RWD N13B16A	Inner diameter:38.5mm	Flexible Coupling Kit	510597S
	2015.03-2015.06		Front	Hatchback RWD N13B16A	Inner diameter:50mm,537625S and 510596S different structure	Flexible Coupling Kit	537625S
	2015.03-2019.06		Centre	Hatchback RWD N13B16A		Center Bearing Support	538672
	2015.03-2019.06		Front	Hatchback RWD N13B16A	AT,Inner diameter:50mm,510596 and 537625 different structure	Flexible Coupling	510596
	2015.03-2019.06		Front	Hatchback RWD N13B16A	MT,Inner diameter:38.5mm	Flexible Coupling	510597
	2015.03-2019.06		Front	Hatchback RWD N13B16A	AT,Inner diameter:50mm,510596 and 537625 different structure	Flexible Coupling	537625
	2015.03-2019.06		Front	Hatchback RWD N13B16A	Inner diameter:50mm,510596S and 537625S different structure	Flexible Coupling Kit	510596S
	2015.03-2019.06		Front	Hatchback RWD N13B16A	Inner diameter:38.5mm	Flexible Coupling Kit	510597S
	2015.03-2019.06		Front	Hatchback RWD N13B16A	Inner diameter:50mm,537625S and 510596S different structure	Flexible Coupling Kit	537625S
1.6 (125 kw)	2011.06-2015.11	AT	Rear	Hatchback RWD N13B16A		Propshaft	PS901438
	2011.06-2015.11		Centre	Hatchback RWD N13B16A		Center Bearing Support	538672
	2011.06-2015.11		Front	Hatchback RWD N13B16A		Flexible Coupling	510596
	2011.06-2015.11		Front	Hatchback RWD N13B16A		Flexible Coupling	510597
	2011.06-2015.11		Front	Hatchback RWD N13B16A		Flexible Coupling	537625
	2011.06-2015.11		Front	Hatchback RWD N13B16A	Inner diameter:50mm,510596S and 537625S different structure	Flexible Coupling Kit	510596S
	2011.06-2015.11		Front	Hatchback RWD N13B16A	Inner diameter:38.5mm	Flexible Coupling Kit	510597S
	2011.06-2015.11		Front	Hatchback RWD N13B16A	Inner diameter:50mm,537625S and 510596S different structure	Flexible Coupling Kit	537625S
	2011.06-2019.06	AT	Rear	Hatchback RWD N13B16A	Model year to:2015	Propshaft	PS901438
	2011.06-2019.06		Centre	Hatchback RWD N13B16A		Center Bearing Support	538672
	2011.06-2019.06		Front	Hatchback RWD N13B16A		Flexible Coupling	510596
	2011.06-2019.06		Front	Hatchback RWD N13B16A		Flexible Coupling	510597
	2011.06-2019.06		Front	Hatchback RWD N13B16A		Flexible Coupling	537625
	2011.06-2019.06		Front	Hatchback RWD N13B16A	Inner diameter:50mm,510596S and 537625S different structure	Flexible Coupling Kit	510596S
	2011.06-2019.06		Front	Hatchback RWD N13B16A	Inner diameter:38.5mm	Flexible Coupling Kit	510597S
	2011.06-2019.06		Front	Hatchback RWD N13B16A	Inner diameter:50mm,537625S and 510596S different structure	Flexible Coupling Kit	537625S
2.0 (95 kw)	2004.07-2008.02	5MT/6MT	Rear	Hatchback RWD N46B20B	Date from:2006.03	Propshaft	PS901709
	2004.07-2008.02	AT	Rear	Hatchback RWD N46B20B		Propshaft	PS901439
	2004.07-2008.02		Centre	Hatchback RWD N46B20B		Center Bearing Support	538672
	2004.07-2008.02		Front	Hatchback RWD N46B20B	Inner diameter:50mm,510596 and 537625 different structure	Flexible Coupling	510596
	2004.07-2008.02		Front	Hatchback RWD N46B20B	Inner diameter:38.5mm	Flexible Coupling	510641
	2004.07-2008.02		Front	Hatchback RWD N46B20B	Inner diameter:50mm,537625 and 510596 different structure	Flexible Coupling	537625
	2004.07-2008.02		Front	Hatchback RWD N46B20B		Flexible Coupling Kit	510596S
	2004.07-2008.02		Front	Hatchback RWD N46B20B		Flexible Coupling Kit	510641S
	2004.09-2008.02	6MT	Rear	Hatchback RWD N46B20B		Propshaft	PS901709
	2004.09-2008.02		Centre	Hatchback RWD N46B20B		Center Bearing Support	538672
	2004.09-2008.02		Front	Hatchback RWD N46B20B		Flexible Coupling	510596
	2004.09-2008.02		Front	Hatchback RWD N46B20B		Flexible Coupling	510641
	2004.09-2008.02		Front	Hatchback RWD N46B20B		Flexible Coupling Kit	510596S

	YEAR	TRANSM.	FITTING POSITION	BODY STYLE & DRIVE TYPE & ENGINE	REMARKS	PRODUCT	GSP Ref.
BMW							
118i							
2.0 (95 kw)	2004.09-2008.02		Front	Hatchback RWD N46B20B		Flexible Coupling Kit	510641S
2.0 (100 kw)	2006.09-2011.12	6MT	Rear	Hatchback RWD N46B20B		Propshaft	PS901709
	2006.09-2011.12		Centre	Hatchback RWD N46B20B		Center Bearing Support	538672
	2006.09-2011.12		Front	Hatchback RWD N46B20B	AT	Flexible Coupling	510596
	2006.09-2011.12		Front	Hatchback RWD N46B20B	MT	Flexible Coupling	510641
	2006.09-2011.12		Front	Hatchback RWD N46B20B		Flexible Coupling Kit	510641S
	2006.10-2012.09	6MT	Rear	Hatchback RWD N46B20B	Date to:2011.06	Propshaft	PS901709
	2006.10-2012.09		Centre	Hatchback RWD N46B20B		Center Bearing Support	538672
	2006.10-2012.09		Front	Hatchback RWD N46B20B	Inner diameter:50mm,510596 and 537625 different structure	Flexible Coupling	510596
	2006.10-2012.09		Front	Hatchback RWD N46B20B	Inner diameter:38.5mm	Flexible Coupling	510641
	2006.10-2012.09		Front	Hatchback RWD N46B20B	Inner diameter:50mm,537625 and 510596 different structure	Flexible Coupling	537625
	2006.10-2012.09		Front	Hatchback RWD N46B20B		Flexible Coupling Kit	510596S
	2006.10-2012.09		Front	Hatchback RWD N46B20B		Flexible Coupling Kit	510641S
2.0 (105 kw)	2006.09-2012.09	6MT	Rear	Hatchback RWD N43B20A	Date to:2011.06	Propshaft	PS901709
	2006.09-2012.09		Centre	Hatchback RWD N43B20A		Center Bearing Support	538672
	2006.09-2012.09		Front	Hatchback RWD N43B20A	Inner diameter:50mm,510596 and 537625 different structure	Flexible Coupling	510596
	2006.09-2012.09		Front	Hatchback RWD N43B20A	Inner diameter:38.5mm	Flexible Coupling	510641
	2006.09-2012.09		Front	Hatchback RWD N43B20A	Inner diameter:50mm,537625 and 510596 different structure	Flexible Coupling	537625
	2006.09-2012.09		Front	Hatchback RWD N43B20A		Flexible Coupling Kit	510596S
	2006.09-2012.09		Front	Hatchback RWD N43B20A		Flexible Coupling Kit	510641S
	2007.03-2012.09	6MT	Rear	Hatchback RWD N43B20A	Date to:2011.12	Propshaft	PS901709
	2007.03-2012.09	AT	Rear	Hatchback RWD N43B20A		Propshaft	PS901439
	2007.03-2012.09		Centre	Hatchback RWD N43B20A		Center Bearing Support	538672
	2007.03-2012.09		Front	Hatchback RWD N43B20A	Inner diameter:50mm,510596 and 537625 different structure	Flexible Coupling	510596
	2007.03-2012.09		Front	Hatchback RWD N43B20A	Inner diameter:38.5mm	Flexible Coupling	510641
	2007.03-2012.09		Front	Hatchback RWD N43B20A	Inner diameter:50mm,537625 and 510596 different structure	Flexible Coupling	537625
	2007.03-2012.09		Front	Hatchback RWD N43B20A		Flexible Coupling Kit	510596S
	2007.03-2012.09		Front	Hatchback RWD N43B20A		Flexible Coupling Kit	510641S
2.0 (125 kw)	2007.03-2007.12		Centre	Hatchback RWD N43B20A		Center Bearing Support	538672
	2007.03-2007.12		Front	Hatchback RWD N43B20A	AT	Flexible Coupling	510596
	2007.03-2007.12		Front	Hatchback RWD N43B20A	MT	Flexible Coupling	510641
	2007.03-2007.12		Front	Hatchback RWD N43B20A	AT	Flexible Coupling	537625
	2007.03-2007.12		Front	Hatchback RWD N43B20A	Inner diameter:50mm	Flexible Coupling Kit	510596S
	2007.03-2007.12		Front	Hatchback RWD N43B20A	Inner diameter:38.5mm	Flexible Coupling Kit	510641S
118i Cabrio							
2.0 (100 kw)	2008.09-2013.12	6MT	Rear	Cabriolet RWD N46B20B	Date to:2013.10	Propshaft	PS901709
	2008.09-2013.12		Centre	Cabriolet RWD N46B20B		Center Bearing Support	538672
	2008.09-2013.12		Front	Cabriolet RWD N46B20B		Flexible Coupling	510596
	2008.09-2013.12		Front	Cabriolet RWD N46B20B		Flexible Coupling	510641
	2008.09-2013.12		Front	Cabriolet RWD N46B20B		Flexible Coupling Kit	510596S
	2008.09-2013.12		Front	Cabriolet RWD N46B20B		Flexible Coupling Kit	510641S
2.0 (105 kw)	2007.09-2013.10	6MT	Rear	Cabriolet RWD N43B20A		Propshaft	PS901709
	2007.09-2013.10	AT	Rear	Cabriolet RWD N43B20A		Propshaft	PS901439
	2007.09-2013.10		Centre	Cabriolet RWD N43B20A		Center Bearing Support	538672
	2007.09-2013.10		Front	Cabriolet RWD N43B20A	Inner diameter:50mm,510596 and 537625 different structure	Flexible Coupling	510596
	2007.09-2013.10		Front	Cabriolet RWD N43B20A	Inner diameter:38.5mm	Flexible Coupling	510641
	2007.09-2013.10		Front	Cabriolet RWD N43B20A	Inner diameter:50mm,537625 and 510596 different structure	Flexible Coupling	537625
	2007.09-2013.10		Front	Cabriolet RWD N43B20A		Flexible Coupling Kit	510596S
	2007.09-2013.10		Front	Cabriolet RWD N43B20A		Flexible Coupling Kit	510641S
120d							
2.0 (110 kw)	2004.06-2007.02	MT	Rear	Hatchback RWD M47D204D4		Propshaft	PS900613
	2004.06-2007.02		Centre	Hatchback RWD M47D204D4		Center Bearing Support	538672
	2004.06-2007.02		Front	Hatchback RWD M47D204D4	510596 and 537625 different structure	Flexible Coupling	510596
	2004.06-2007.02		Front	Hatchback RWD M47D204D4	537625 and 510596 different structure	Flexible Coupling	537625
	2004.06-2007.02		Rear	Hatchback RWD M47D204D4		Flexible Coupling	533878
	2004.06-2007.02		Front	Hatchback RWD M47D204D4		Flexible Coupling Kit	510596S
	2004.06-2007.02		Rear	Hatchback RWD M47D204D4		Flexible Coupling Kit	538112S
	2004.06-2007.02		Front;Rear	Hatchback RWD M47D204D4		Flexible Coupling Kit	517955S
2.0 (115 kw)	2006.05-2007.02		Front	Hatchback RWD M47 D20(204D4)		Flexible Coupling Kit	510596S
	2006.05-2007.02		Rear	Hatchback RWD M47 D20(204D4)		Flexible Coupling Kit	538112S
2.0 (120 kw)	2004.06-2011.06	AT	Rear	Hatchback RWD M47D204D4/N47D20A		Propshaft	PS901634
	2004.06-2011.06	MT	Rear	Hatchback RWD M47D204D4/N47D20A		Propshaft	PS900613
	2004.06-2011.06		Centre	Hatchback RWD M47D204D4/N47D20A		Center Bearing Support	538672
	2004.06-2011.06		Front	Hatchback RWD M47D204D4/N47D20A	510596 and 537625 different structure	Flexible Coupling	510596

	YEAR	TRANSM.	FITTING POSITION	BODY STYLE & DRIVE TYPE & ENGINE	REMARKS	PRODUCT	GSP Ref.
BMW **120d**							
2.0 (120 kw)	2004.06-2011.06		Front	Hatchback RWD M47D204D4/N47D20A	537625 and 510596 different structure	Flexible Coupling	537625
	2004.06-2011.06		Rear	Hatchback RWD M47D204D4/N47D20A		Flexible Coupling	533878
	2004.06-2011.06		Front;Rear	Hatchback RWD M47D204D4/N47D20A		Flexible Coupling	517955
	2004.06-2011.06		Front	Hatchback RWD M47D204D4/N47D20A		Flexible Coupling Kit	510596S
	2004.06-2011.06		Rear	Hatchback RWD M47D204D4/N47D20A	Engine Code:M47 D20 (204D4)	Flexible Coupling Kit	538112S
	2004.06-2011.06		Front;Rear	Hatchback RWD M47D204D4/N47D20A		Flexible Coupling Kit	517955S
	2007.03-2011.12	AT	Rear	Hatchback RWD N47D20A/N47D20C		Propshaft	PS901634
	2007.03-2011.12	MT	Rear	Hatchback RWD N47D20A/N47D20C		Propshaft	PS900613
	2007.03-2011.12		Centre	Hatchback RWD N47D20A/N47D20C		Center Bearing Support	538672
	2007.03-2011.12		Front	Hatchback RWD N47D20A/N47D20C	510596 and 537625 different structure	Flexible Coupling	510596
	2007.03-2011.12		Front	Hatchback RWD N47D20A/N47D20C	537625 and 510596 different structure	Flexible Coupling	537625
	2007.03-2011.12		Rear	Hatchback RWD N47D20A/N47D20C		Flexible Coupling	533878
	2007.03-2011.12		Front;Rear	Hatchback RWD N47D20A/N47D20C		Flexible Coupling	517955
	2007.03-2011.12		Front	Hatchback RWD N47D20A/N47D20C		Flexible Coupling Kit	510596S
	2007.03-2011.12		Rear	Hatchback RWD N47D20A/N47D20C	AT	Flexible Coupling Kit	538112S
	2007.03-2011.12		Front;Rear	Hatchback RWD N47D20A/N47D20C		Flexible Coupling Kit	517955S
	2011.07-2019.06	AT	Rear	Hatchback RWD B47D20A/N47D20C		Propshaft	PS900611
	2011.07-2019.06		Centre	Hatchback RWD B47D20A/N47D20C		Center Bearing Support	538672
	2011.07-2019.06		Front	Hatchback RWD B47D20A/N47D20C		Flexible Coupling	510596
	2011.07-2019.06		Front	Hatchback RWD B47D20A/N47D20C		Flexible Coupling	537625
	2011.07-2019.06		Front;Rear	Hatchback RWD B47D20A/N47D20C		Flexible Coupling	517955
	2011.07-2019.06		Front	Hatchback RWD B47D20A/N47D20C		Flexible Coupling Kit	510596S
	2011.07-2019.06		Front	Hatchback RWD B47D20A/N47D20C		Flexible Coupling Kit	537625S
	2011.07-2019.06		Front;Rear	Hatchback RWD B47D20A/N47D20C		Flexible Coupling Kit	517955S
	2013.07-2019.06		Centre	Hatchback RWD B47D20A/N47D20C		Center Bearing Support	538672
	2013.07-2019.06		Front	Hatchback RWD B47D20A/N47D20C		Flexible Coupling	510596
	2013.07-2019.06		Front	Hatchback RWD B47D20A/N47D20C		Flexible Coupling	537625
	2013.07-2019.06		Front;Rear	Hatchback RWD B47D20A/N47D20C		Flexible Coupling	517955
	2013.07-2019.06		Front	Hatchback RWD B47D20A/N47D20C		Flexible Coupling Kit	510596S
	2013.07-2019.06		Front	Hatchback RWD B47D20A/N47D20C		Flexible Coupling Kit	537625S
	2013.07-2019.06		Front;Rear	Hatchback RWD B47D20A/N47D20C		Flexible Coupling Kit	517955S
2.0 (125 kw)	2007.03-2010.10		Front	Hatchback RWD N47 D20 A		Flexible Coupling Kit	510596S
	2007.03-2010.10		Rear	Hatchback RWD N47 D20 A	AT	Flexible Coupling Kit	538112S
2.0 (130 kw)	2007.03-2011.06	AT	Rear	Hatchback RWD N47D20A/N47D20C		Propshaft	PS901634
	2007.03-2011.06	MT	Rear	Hatchback RWD N47D20A/N47D20C		Propshaft	PS900613
	2007.03-2011.06		Centre	Hatchback RWD N47D20A/N47D20C		Center Bearing Support	538672
	2007.03-2011.06		Front	Hatchback RWD N47D20A/N47D20C	510596 and 537625 different structure	Flexible Coupling	510596
	2007.03-2011.06		Front	Hatchback RWD N47D20A/N47D20C	537625 and 510596 different structure	Flexible Coupling	537625
	2007.03-2011.06		Rear	Hatchback RWD N47D20A/N47D20C		Flexible Coupling	533878
	2007.03-2011.06		Front;Rear	Hatchback RWD N47D20A/N47D20C		Flexible Coupling	517955
	2007.03-2011.06		Front	Hatchback RWD N47D20A/N47D20C		Flexible Coupling Kit	510596S
	2007.03-2011.06		Rear	Hatchback RWD N47D20A/N47D20C	AT	Flexible Coupling Kit	538112S
	2007.03-2011.06		Front;Rear	Hatchback RWD N47D20A/N47D20C		Flexible Coupling Kit	517955S
	2007.03-2011.12	AT	Rear	Hatchback RWD N47D20A/N47D20C		Propshaft	PS901634
	2007.03-2011.12	MT	Rear	Hatchback RWD N47D20A/N47D20C		Propshaft	PS900613
	2007.03-2011.12		Centre	Hatchback RWD N47D20A/N47D20C		Center Bearing Support	538672
	2007.03-2011.12		Front	Hatchback RWD N47D20A/N47D20C	510596 and 537625 different structure	Flexible Coupling	510596
	2007.03-2011.12		Front	Hatchback RWD N47D20A/N47D20C	537625 and 510596 different structure	Flexible Coupling	537625
	2007.03-2011.12		Rear	Hatchback RWD N47D20A/N47D20C		Flexible Coupling	533878
	2007.03-2011.12		Front;Rear	Hatchback RWD N47D20A/N47D20C		Flexible Coupling	517955
	2007.03-2011.12		Front	Hatchback RWD N47D20A/N47D20C		Flexible Coupling Kit	510596S
	2007.03-2011.12		Rear	Hatchback RWD N47D20A/N47D20C	AT	Flexible Coupling Kit	538112S
	2007.03-2011.12		Front;Rear	Hatchback RWD N47D20A/N47D20C		Flexible Coupling Kit	517955S
2.0 (135 kw)	2011.07-2015.02		Centre	Hatchback RWD N47D20C		Center Bearing Support	538672
	2011.07-2015.02		Front	Hatchback RWD N47D20C		Flexible Coupling	510596
	2011.07-2015.02		Front	Hatchback RWD N47D20C		Flexible Coupling	537625
	2011.07-2015.02		Front;Rear	Hatchback RWD N47D20C		Flexible Coupling	517955
	2011.07-2015.02		Front	Hatchback RWD N47D20C		Flexible Coupling Kit	510596S
	2011.07-2015.02		Front	Hatchback RWD N47D20C		Flexible Coupling Kit	537625S
	2011.07-2015.02		Front;Rear	Hatchback RWD N47D20C		Flexible Coupling Kit	517955S
	2012.08-2015.02		Centre	Hatchback RWD N47D20C		Center Bearing Support	538672
	2012.08-2015.02		Front	Hatchback RWD N47D20C		Flexible Coupling	510596
	2012.08-2015.02		Front	Hatchback RWD N47D20C		Flexible Coupling	537625
	2012.08-2015.02		Front;Rear	Hatchback RWD N47D20C		Flexible Coupling	517955

	YEAR	TRANSM.	FITTING POSITION	BODY STYLE & DRIVE TYPE & ENGINE	REMARKS	PRODUCT	GSP Ref.
BMW							
120d							
2.0 (135 kw)	2012.08-2015.02		Front	Hatchback RWD N47D20C		Flexible Coupling Kit	510596S
	2012.08-2015.02		Front	Hatchback RWD N47D20C		Flexible Coupling Kit	537625S
	2012.08-2015.02		Front;Rear	Hatchback RWD N47D20C		Flexible Coupling Kit	517955S
2.0 (140 kw)	2015.03-2019.06	AT	Rear	Hatchback RWD B47D20A		Propshaft	PS900611
	2015.03-2019.06	AT	Rear	Hatchback Van RWD B47D20A		Propshaft	PS900611
	2015.03-2019.06		Centre	Hatchback RWD B47D20A		Center Bearing Support	538672
	2015.03-2019.06		Front	Hatchback RWD B47D20A		Flexible Coupling	510596
	2015.03-2019.06		Front	Hatchback RWD B47D20A		Flexible Coupling	537625
	2015.03-2019.06		Front;Rear	Hatchback RWD B47D20A		Flexible Coupling	517955
	2015.03-2019.06		Front	Hatchback RWD B47D20A		Flexible Coupling Kit	510596S
	2015.03-2019.06		Front	Hatchback RWD B47D20A		Flexible Coupling Kit	537625S
2.0 (145 kw)	2007.03-2011.12	AT	Rear	Hatchback RWD N47D20A/N47D20C		Propshaft	PS901634
	2007.03-2011.12	MT	Rear	Hatchback RWD N47D20A/N47D20C		Propshaft	PS900613
	2007.03-2011.12		Centre	Hatchback RWD N47D20A/N47D20C		Center Bearing Support	538672
	2007.03-2011.12		Front	Hatchback RWD N47D20A/N47D20C		Flexible Coupling	510596
	2007.03-2011.12		Rear	Hatchback RWD N47D20A/N47D20C		Flexible Coupling	533878
	2007.03-2011.12		Front;Rear	Hatchback RWD N47D20A/N47D20C		Flexible Coupling	517955
	2007.03-2011.12		Front	Hatchback RWD N47D20A/N47D20C		Flexible Coupling Kit	510596S
	2007.03-2011.12		Rear	Hatchback RWD N47D20A/N47D20C	AT	Flexible Coupling Kit	538112S
	2007.03-2011.12		Front;Rear	Hatchback RWD N47D20A/N47D20C		Flexible Coupling Kit	517955S
2.0 (147 kw)	2011.07-2015.02		Centre	Hatchback RWD N47D20C		Center Bearing Support	538672
	2011.07-2015.02		Front	Hatchback RWD N47D20C		Flexible Coupling	510596
	2011.07-2015.02		Front	Hatchback RWD N47D20C		Flexible Coupling	537625
	2011.07-2015.02		Front;Rear	Hatchback RWD N47D20C		Flexible Coupling	517955
	2011.07-2015.02		Front	Hatchback RWD N47D20C		Flexible Coupling Kit	510596S
	2011.07-2015.02		Front	Hatchback RWD N47D20C		Flexible Coupling Kit	537625S
	2011.07-2015.02		Front;Rear	Hatchback RWD N47D20C		Flexible Coupling Kit	517955S
	2012.01-2015.02		Centre	Hatchback RWD N47D20C		Center Bearing Support	538672
	2012.01-2015.02		Front	Hatchback RWD N47D20C		Flexible Coupling	510596
	2012.01-2015.02		Front	Hatchback RWD N47D20C		Flexible Coupling	537625
	2012.01-2015.02		Front;Rear	Hatchback RWD N47D20C		Flexible Coupling	517955
	2012.01-2015.02		Front	Hatchback RWD N47D20C		Flexible Coupling Kit	510596S
	2012.01-2015.02		Front	Hatchback RWD N47D20C		Flexible Coupling Kit	537625S
	2012.01-2015.02		Front;Rear	Hatchback RWD N47D20C		Flexible Coupling Kit	517955S
2.0 (151 kw)	2015.03-2019.06	AT	Rear	Hatchback RWD B47D20A		Propshaft	PS900611
120d Cabrio							
2.0 (120 kw)	2008.03-2013.12	AT	Rear	Cabriolet RWD N47D20A		Propshaft	PS901634
	2008.03-2013.12	MT	Rear	Cabriolet RWD N47D20A		Propshaft	PS900613
	2008.03-2013.12		Centre	Cabriolet RWD N47D20A		Center Bearing Support	538672
	2008.03-2013.12		Rear	Cabriolet RWD N47D20A		Flexible Coupling	533878
	2008.03-2013.12		Front;Rear	Cabriolet RWD N47D20A		Flexible Coupling	517955
	2008.03-2013.12		Front	Cabriolet RWD N47D20A		Flexible Coupling Kit	537669S
	2008.03-2013.12		Rear	Cabriolet RWD N47D20A	AT	Flexible Coupling Kit	538112S
	2008.03-2013.12		Front;Rear	Cabriolet RWD N47D20A		Flexible Coupling Kit	517955S
2.0 (130 kw)	2008.03-2013.12	AT	Rear	Cabriolet RWD N47D20A/N47D20C		Propshaft	PS901634
	2008.03-2013.12	MT	Rear	Cabriolet RWD N47D20A/N47D20C		Propshaft	PS900613
	2008.03-2013.12		Centre	Cabriolet RWD N47D20A/N47D20C		Center Bearing Support	538672
	2008.03-2013.12		Front	Cabriolet RWD N47D20A/N47D20C	510596 and 537625 different structure	Flexible Coupling	510596
	2008.03-2013.12		Front	Cabriolet RWD N47D20A/N47D20C	537625 and 510596 different structure	Flexible Coupling	537625
	2008.03-2013.12		Rear	Cabriolet RWD N47D20A/N47D20C		Flexible Coupling	533878
	2008.03-2013.12		Front;Rear	Cabriolet RWD N47D20A/N47D20C		Flexible Coupling	517955
	2008.03-2013.12		Front	Cabriolet RWD N47D20A/N47D20C		Flexible Coupling Kit	510596S
	2008.03-2013.12		Rear	Cabriolet RWD N47D20A/N47D20C	AT	Flexible Coupling Kit	538112S
	2008.03-2013.12		Front;Rear	Cabriolet RWD N47D20A/N47D20C		Flexible Coupling Kit	517955S
2.0 (145 kw)	2008.03-2012.12	AT	Rear	Cabriolet RWD N47D20C		Propshaft	PS901634
	2008.03-2012.12	MT	Rear	Cabriolet RWD N47D20C		Propshaft	PS900613
	2008.03-2012.12		Centre	Cabriolet RWD N47D20C		Center Bearing Support	538672
	2008.03-2012.12		Rear	Cabriolet RWD N47D20C		Flexible Coupling	533878
	2008.03-2012.12		Front;Rear	Cabriolet RWD N47D20C		Flexible Coupling	517955
	2008.03-2012.12		Front	Cabriolet RWD N47D20C		Flexible Coupling Kit	537669S
	2008.03-2012.12		Rear	Cabriolet RWD N47D20C	AT	Flexible Coupling Kit	538112S
	2008.03-2012.12		Front;Rear	Cabriolet RWD N47D20C		Flexible Coupling Kit	517955S

	YEAR	TRANSM.	FITTING POSITION	BODY STYLE & DRIVE TYPE & ENGINE	REMARKS	PRODUCT	GSP Ref.
BMW							
120d Coupe							
2.0 (120 kw)	2007.10-2013.10	AT	Rear	Coupe RWD N47D20A		Propshaft	PS901634
	2007.10-2013.10	MT	Rear	Coupe RWD N47D20A		Propshaft	PS900613
	2007.10-2013.10		Centre	Coupe RWD N47D20A		Center Bearing Support	538672
	2007.10-2013.10		Front	Coupe RWD N47D20A		Flexible Coupling	510596
	2007.10-2013.10		Rear	Coupe RWD N47D20A		Flexible Coupling	533878
	2007.10-2013.10		Front;Rear	Coupe RWD N47D20A		Flexible Coupling	517955
	2007.10-2013.10		Front	Coupe RWD N47D20A		Flexible Coupling Kit	537669S
	2007.10-2013.10		Rear	Coupe RWD N47D20A	AT	Flexible Coupling Kit	538112S
	2007.10-2013.10		Front;Rear	Coupe RWD N47D20A		Flexible Coupling Kit	517955S
2.0 (130 kw)	2007.09-2013.10	AT	Rear	Coupe RWD N47D20A/N47D20C		Propshaft	PS901634
	2007.09-2013.10	MT	Rear	Coupe RWD N47D20A/N47D20C		Propshaft	PS900613
	2007.09-2013.10		Centre	Coupe RWD N47D20A/N47D20C		Center Bearing Support	538672
	2007.09-2013.10		Front	Coupe RWD N47D20A/N47D20C	510596 and 537625 different structure	Flexible Coupling	510596
	2007.09-2013.10		Front	Coupe RWD N47D20A/N47D20C	537625 and 510596 different structure	Flexible Coupling	537625
	2007.09-2013.10		Rear	Coupe RWD N47D20A/N47D20C		Flexible Coupling	533878
	2007.09-2013.10		Front;Rear	Coupe RWD N47D20A/N47D20C		Flexible Coupling	517955
	2007.09-2013.10		Front	Coupe RWD N47D20A/N47D20C		Flexible Coupling Kit	510596S
	2007.09-2013.10		Rear	Coupe RWD N47D20A/N47D20C	AT	Flexible Coupling Kit	538112S
	2007.09-2013.10		Front;Rear	Coupe RWD N47D20A/N47D20C		Flexible Coupling Kit	517955S
2.0 (145 kw)	2007.09-2013.10	AT	Rear	Coupe RWD N47D20A/N47D20C		Propshaft	PS901634
	2007.09-2013.10	MT	Rear	Coupe RWD N47D20A/N47D20C		Propshaft	PS900613
	2007.09-2013.10		Centre	Coupe RWD N47D20A/N47D20C		Center Bearing Support	538672
	2007.09-2013.10		Front	Coupe RWD N47D20A/N47D20C		Flexible Coupling	510596
	2007.09-2013.10		Rear	Coupe RWD N47D20A/N47D20C		Flexible Coupling	533878
	2007.09-2013.10		Front;Rear	Coupe RWD N47D20A/N47D20C		Flexible Coupling	517955
	2007.09-2013.10		Front	Coupe RWD N47D20A/N47D20C		Flexible Coupling Kit	510596S
	2007.09-2013.10		Rear	Coupe RWD N47D20A/N47D20C	AT	Flexible Coupling Kit	538112S
	2007.09-2013.10		Front;Rear	Coupe RWD N47D20A/N47D20C		Flexible Coupling Kit	517955S
120d xDrive							
2.0 (135 kw)	2012.02-2015.02		Centre	Hatchback 4WD N47D20C		Center Bearing Support	538672
	2012.02-2015.02		Front	Hatchback 4WD N47D20C	510596 and 537625 different structure	Flexible Coupling	510596
	2012.02-2015.02		Front	Hatchback 4WD N47D20C	537625 and 510596 different structure	Flexible Coupling	537625
	2012.02-2015.02		Front;Rear	Hatchback 4WD N47D20C		Flexible Coupling	517955
	2012.02-2015.02		Front	Hatchback 4WD N47D20C	510596S and 537625S different structure	Flexible Coupling Kit	510596S
	2012.02-2015.02		Front	Hatchback 4WD N47D20C	537625S and 510596S different structure	Flexible Coupling Kit	537625S
	2012.02-2015.02		Front;Rear	Hatchback 4WD N47D20C		Flexible Coupling Kit	517955S
	2012.11-2015.02		Centre	Hatchback 4WD N47D20C		Center Bearing Support	538672
	2012.11-2015.02		Front	Hatchback 4WD N47D20C	510596 and 537625 different structure	Flexible Coupling	510596
	2012.11-2015.02		Front	Hatchback 4WD N47D20C	537625 and 510596 different structure	Flexible Coupling	537625
	2012.11-2015.02		Front;Rear	Hatchback 4WD N47D20C		Flexible Coupling	517955
	2012.11-2015.02		Front	Hatchback 4WD N47D20C	510596S and 537625S different structure	Flexible Coupling Kit	510596S
	2012.11-2015.02		Front	Hatchback 4WD N47D20C	537625S and 510596S different structure	Flexible Coupling Kit	537625S
	2012.11-2015.02		Front;Rear	Hatchback 4WD N47D20C		Flexible Coupling Kit	517955S
2.0 (140 kw)	2015.03-2019.06		Centre	Hatchback 4WD B47D20A		Center Bearing Support	538672
	2015.03-2019.06		Front	Hatchback 4WD B47D20A		Flexible Coupling	510596
	2015.03-2019.06		Front	Hatchback 4WD B47D20A		Flexible Coupling	537625
	2015.03-2019.06		Front;Rear	Hatchback 4WD B47D20A		Flexible Coupling	517955
	2015.03-2019.06		Front	Hatchback 4WD B47D20A	510596S and 537625S different structure	Flexible Coupling Kit	510596S
	2015.03-2019.06		Front	Hatchback 4WD B47D20A	537625S and 510596S different structure	Flexible Coupling Kit	537625S
	2015.03-2019.06		Front;Rear	Hatchback 4WD B47D20A		Flexible Coupling Kit	517955S
	2019.07-		Front	Hatchback 4WD B47C20B		Flexible Coupling	510597
	2019.07-		Front	Hatchback 4WD B47C20B		Flexible Coupling Kit	510597S
2.0 (147 kw)	2012.02-2015.02		Centre	Hatchback 4WD N47D20C		Center Bearing Support	538672
	2012.02-2015.02		Front	Hatchback 4WD N47D20C	510596 and 537625 different structure	Flexible Coupling	510596
	2012.02-2015.02		Front	Hatchback 4WD N47D20C	537625 and 510596 different structure	Flexible Coupling	537625
	2012.02-2015.02		Front;Rear	Hatchback 4WD N47D20C		Flexible Coupling	517955
	2012.02-2015.02		Front	Hatchback 4WD N47D20C	510596S and 537625S different structure	Flexible Coupling Kit	510596S
	2012.02-2015.02		Front	Hatchback 4WD N47D20C	537625S and 510596S different structure	Flexible Coupling Kit	537625S
	2012.02-2015.02		Front;Rear	Hatchback 4WD N47D20C		Flexible Coupling Kit	517955S
	2012.11-2015.02		Centre	Hatchback 4WD N47D20C		Center Bearing Support	538672
	2012.11-2015.02		Front	Hatchback 4WD N47D20C	510596 and 537625 different structure	Flexible Coupling	510596
	2012.11-2015.02		Front	Hatchback 4WD N47D20C	537625 and 510596 different structure	Flexible Coupling	537625
	2012.11-2015.02		Front;Rear	Hatchback 4WD N47D20C		Flexible Coupling	517955
	2012.11-2015.02		Front	Hatchback 4WD N47D20C	510596S and 537625S different structure	Flexible Coupling Kit	510596S

	YEAR	TRANSM.	FITTING POSITION	BODY STYLE & DRIVE TYPE & ENGINE	REMARKS	PRODUCT	GSP Ref.
BMW							
120d xDrive							
2.0 (147 kw)	2012.11-2015.02		Front	Hatchback 4WD N47D20C	537625S and 510596S different structure	Flexible Coupling Kit	537625S
	2012.11-2015.02		Front;Rear	Hatchback 4WD N47D20C		Flexible Coupling Kit	517955S
120i							
1.6 (130 kw)	2015.03-2016.06		Centre	Hatchback RWD N13B16A		Center Bearing Support	538672
	2015.03-2016.06		Front	Hatchback RWD N13B16A	AT,Inner diameter:50mm,510596 and 537625 different structure	Flexible Coupling	510596
	2015.03-2016.06		Front	Hatchback RWD N13B16A	MT,Inner diameter:38.5mm	Flexible Coupling	510597
	2015.03-2016.06		Front	Hatchback RWD N13B16A	AT,Inner diameter:50mm,510596 and 537625 different structure	Flexible Coupling	537625
	2015.03-2016.06		Front	Hatchback RWD N13B16A	Inner diameter:50mm,510596S and 537625S different structure	Flexible Coupling Kit	510596S
	2015.03-2016.06		Front	Hatchback RWD N13B16A	Inner diameter:38.5mm	Flexible Coupling Kit	510597S
	2015.03-2016.06		Front	Hatchback RWD N13B16A	Inner diameter:50mm,537625S and 510596S different structure	Flexible Coupling Kit	537625S
	2015.03-2019.06		Centre	Hatchback RWD N13B16A		Center Bearing Support	538672
	2015.03-2019.06		Front	Hatchback RWD N13B16A	AT,Inner diameter:50mm,510596 and 537625 different structure	Flexible Coupling	510596
	2015.03-2019.06		Front	Hatchback RWD N13B16A	MT,Inner diameter:38.5mm	Flexible Coupling	510597
	2015.03-2019.06		Front	Hatchback RWD N13B16A	AT,Inner diameter:50mm,510596 and 537625 different structure	Flexible Coupling	537625
	2015.03-2019.06		Front	Hatchback RWD N13B16A	Inner diameter:50mm,510596S and 537625S different structure	Flexible Coupling Kit	510596S
	2015.03-2019.06		Front	Hatchback RWD N13B16A	Inner diameter:38.5mm	Flexible Coupling Kit	510597S
	2015.03-2019.06		Front	Hatchback RWD N13B16A	Inner diameter:50mm,537625S and 510596S different structure	Flexible Coupling Kit	537625S
2.0 (110 kw)	2004.06-2007.02	6MT	Rear	Hatchback RWD N46B20B/N46B20BD/N46B20C	Date from:2005.09	Propshaft	PS901709
	2004.06-2007.02	AT	Rear	Hatchback RWD N46B20B/N46B20BD/N46B20C		Propshaft	PS901439
	2004.06-2007.02		Centre	Hatchback RWD N46B20B/N46B20BD/N46B20C		Center Bearing Support	538672
	2004.06-2007.02		Front	Hatchback RWD N46B20B/N46B20BD/N46B20C	Inner diameter:50mm,510596 and 537625 different structure	Flexible Coupling	510596
	2004.06-2007.02		Front	Hatchback RWD N46B20B/N46B20BD/N46B20C	Inner diameter:38.5mm	Flexible Coupling	510641
	2004.06-2007.02		Front	Hatchback RWD N46B20B/N46B20BD/N46B20C	Inner diameter:50mm,537625 and 510596 different structure	Flexible Coupling	537625
	2004.06-2007.02		Front	Hatchback RWD N46B20B/N46B20BD/N46B20C		Flexible Coupling Kit	510596S
	2004.06-2007.02		Front	Hatchback RWD N46B20B/N46B20BD/N46B20C		Flexible Coupling Kit	510641S
2.0 (115 kw)	2007.03-2011.06	6MT	Rear	Hatchback RWD N46B20B/N46B20C		Propshaft	PS901709
	2007.03-2011.06		Centre	Hatchback RWD N46B20B/N46B20C		Center Bearing Support	538672
	2007.03-2011.06		Front	Hatchback RWD N46B20B/N46B20C	Inner diameter:50mm,510596 and 537625 different structure	Flexible Coupling	510596
	2007.03-2011.06		Front	Hatchback RWD N46B20B/N46B20C	Inner diameter:38.5mm	Flexible Coupling	510641
	2007.03-2011.06		Front	Hatchback RWD N46B20B/N46B20C	Inner diameter:50mm,537625 and 510596 different structure	Flexible Coupling	537625
	2007.03-2011.06		Front	Hatchback RWD N46B20B/N46B20C		Flexible Coupling Kit	510596S
	2007.03-2011.06		Front	Hatchback RWD N46B20B/N46B20C		Flexible Coupling Kit	510641S
	2007.03-2011.12	6MT	Rear	Hatchback RWD N46B20B/N46B20C		Propshaft	PS901709
	2007.03-2011.12		Centre	Hatchback RWD N46B20B/N46B20C		Center Bearing Support	538672
	2007.03-2011.12		Front	Hatchback RWD N46B20B/N46B20C		Flexible Coupling	510596
	2007.03-2011.12		Front	Hatchback RWD N46B20B/N46B20C		Flexible Coupling	510641
	2007.03-2011.12		Front	Hatchback RWD N46B20B/N46B20C		Flexible Coupling Kit	510596S
	2007.03-2011.12		Front	Hatchback RWD N46B20B/N46B20C		Flexible Coupling Kit	510641S
2.0 (120 kw)	2007.03-2011.06	6MT	Rear	Hatchback RWD N43B20A		Propshaft	PS901709
	2007.03-2011.06		Centre	Hatchback RWD N43B20A		Center Bearing Support	538672
	2007.03-2011.06		Front	Hatchback RWD N43B20A	Inner diameter:50mm,510596 and 537625 different structure	Flexible Coupling	510596
	2007.03-2011.06		Front	Hatchback RWD N43B20A	Inner diameter:38.5mm	Flexible Coupling	510641
	2007.03-2011.06		Front	Hatchback RWD N43B20A	Inner diameter:50mm,537625 and 510596 different structure	Flexible Coupling	537625
	2007.03-2011.06		Front	Hatchback RWD N43B20A	Inner diameter:50mm	Flexible Coupling Kit	510596S
	2007.03-2011.06		Front	Hatchback RWD N43B20A	Inner diameter:38.5mm	Flexible Coupling Kit	510641S
	2007.03-2012.09	6MT	Rear	Hatchback RWD N43B20A	Date to:2011.12	Propshaft	PS901709
	2007.03-2012.09	AT	Rear	Hatchback RWD N43B20A		Propshaft	PS901439
	2007.03-2012.09		Centre	Hatchback RWD N43B20A		Center Bearing Support	538672
	2007.03-2012.09		Front	Hatchback RWD N43B20A		Flexible Coupling	510596
	2007.03-2012.09		Front	Hatchback RWD N43B20A		Flexible Coupling	510641
	2007.03-2012.09		Front	Hatchback RWD N43B20A		Flexible Coupling Kit	510641S
2.0 (125 kw)	2007.03-2011.06	6MT	Rear	Hatchback RWD N43B20A		Propshaft	PS901709
	2007.03-2011.06		Centre	Hatchback RWD N43B20A		Center Bearing Support	538672
	2007.03-2011.06		Front	Hatchback RWD N43B20A	Inner diameter:50mm,510596 and 537625 different structure	Flexible Coupling	510596
	2007.03-2011.06		Front	Hatchback RWD N43B20A	Inner diameter:38.5mm	Flexible Coupling	510641
	2007.03-2011.06		Front	Hatchback RWD N43B20A	Inner diameter:50mm,537625 and 510596 different structure	Flexible Coupling	537625
	2007.03-2011.06		Front	Hatchback RWD N43B20A		Flexible Coupling Kit	510596S
	2007.03-2011.06		Front	Hatchback RWD N43B20A		Flexible Coupling Kit	510641S
	2007.03-2012.09	6MT	Rear	Hatchback RWD N43B20A	Date to:2011.12	Propshaft	PS901709
	2007.03-2012.09	AT	Rear	Hatchback RWD N43B20A		Propshaft	PS901439
	2007.03-2012.09		Centre	Hatchback RWD N43B20A		Center Bearing Support	538672
	2007.03-2012.09		Front	Hatchback RWD N43B20A	Inner diameter:50mm,510596 and 537625 different structure	Flexible Coupling	510596
	2007.03-2012.09		Front	Hatchback RWD N43B20A	Inner diameter:38.5mm	Flexible Coupling	510641
	2007.03-2012.09		Front	Hatchback RWD N43B20A	Inner diameter:50mm,537625 and 510596 different structure	Flexible Coupling	537625

	YEAR	TRANSM.	FITTING POSITION	BODY STYLE & DRIVE TYPE & ENGINE	REMARKS	PRODUCT	GSP Ref.
BMW							
120i							
2.0 (125 kw)	2007.03-2012.09		Front	Hatchback RWD N43B20A		Flexible Coupling Kit	510596S
	2007.03-2012.09		Front	Hatchback RWD N43B20A		Flexible Coupling Kit	510641S
2.0 (135 kw)	2016.07-2019.06		Centre	Hatchback RWD B48B20A		Center Bearing Support	538672
	2016.07-2019.06		Front	Hatchback RWD B48B20A	Inner diameter:50mm,510596 and 537625 different structure	Flexible Coupling	510596
	2016.07-2019.06		Front	Hatchback RWD B48B20A	MT,Inner diameter:38.5mm	Flexible Coupling	510597
	2016.07-2019.06		Front	Hatchback RWD B48B20A	Inner diameter:50mm,537625 and 510596 different structure	Flexible Coupling	537625
	2016.07-2019.06		Front	Hatchback RWD B48B20A		Flexible Coupling Kit	510596S
	2016.07-2019.06		Front	Hatchback RWD B48B20A		Flexible Coupling Kit	537625S
120i Cabrio							
2.0 (115 kw)	2008.03-2013.12	6MT	Rear	Cabriolet RWD N46B20B/N46B20C	Date to:2013.10	Propshaft	PS901709
	2008.03-2013.12		Centre	Cabriolet RWD N46B20B/N46B20C		Center Bearing Support	538672
	2008.03-2013.12		Front	Cabriolet RWD N46B20B/N46B20C		Flexible Coupling	510596
	2008.03-2013.12		Front	Cabriolet RWD N46B20B/N46B20C		Flexible Coupling	510641
	2008.03-2013.12		Front	Cabriolet RWD N46B20B/N46B20C		Flexible Coupling Kit	510596S
	2008.03-2013.12		Front	Cabriolet RWD N46B20B/N46B20C		Flexible Coupling Kit	510641S
2.0 (120 kw)	2008.03-2013.12	6MT	Rear	Cabriolet RWD N43B20A	Date to:2013.10	Propshaft	PS901709
	2008.03-2013.12	AT	Rear	Cabriolet RWD N43B20A		Propshaft	PS901439
	2008.03-2013.12		Centre	Cabriolet RWD N43B20A		Center Bearing Support	538672
	2008.03-2013.12		Front	Cabriolet RWD N43B20A		Flexible Coupling	510596
	2008.03-2013.12		Front	Cabriolet RWD N43B20A		Flexible Coupling	510641
	2008.03-2013.12		Front	Cabriolet RWD N43B20A	AT	Flexible Coupling Kit	510641S
2.0 (125 kw)	2007.12-2013.10	6MT	Rear	Cabriolet RWD N43B20A		Propshaft	PS901709
	2007.12-2013.10	AT	Rear	Cabriolet RWD N43B20A		Propshaft	PS901439
	2007.12-2013.10		Centre	Cabriolet RWD N43B20A		Center Bearing Support	538672
	2007.12-2013.10		Front	Cabriolet RWD N43B20A	Inner diameter:50mm,510596 and 537625 different structure	Flexible Coupling	510596
	2007.12-2013.10		Front	Cabriolet RWD N43B20A	Inner diameter:38.5mm	Flexible Coupling	510641
	2007.12-2013.10		Front	Cabriolet RWD N43B20A	Inner diameter:50mm,537625 and 510596 different structure	Flexible Coupling	537625
	2007.12-2013.10		Front	Cabriolet RWD N43B20A		Flexible Coupling Kit	510596S
	2007.12-2013.10		Front	Cabriolet RWD N43B20A		Flexible Coupling Kit	510641S
120i Coupe							
2.0 (115 kw)	2009.09-2013.10	6MT	Rear	Coupe RWD N46B20B/N46B20C		Propshaft	PS901709
	2009.09-2013.10		Centre	Coupe RWD N46B20B/N46B20C		Center Bearing Support	538672
	2009.09-2013.10		Front	Coupe RWD N46B20B/N46B20C		Flexible Coupling	510596
	2009.09-2013.10		Front	Coupe RWD N46B20B/N46B20C		Flexible Coupling	510641
	2009.09-2013.10		Front	Coupe RWD N46B20B/N46B20C		Flexible Coupling Kit	510596S
	2009.09-2013.10		Front	Coupe RWD N46B20B/N46B20C		Flexible Coupling Kit	510641S
2.0 (125 kw)	2009.06-2013.10	6MT	Rear	Coupe RWD N43B20A		Propshaft	PS901709
	2009.06-2013.10	AT	Rear	Coupe RWD N43B20A	Model year from:2009	Propshaft	PS901439
	2009.06-2013.10		Centre	Coupe RWD N43B20A		Center Bearing Support	538672
	2009.06-2013.10		Front	Coupe RWD N43B20A		Flexible Coupling	510596
	2009.06-2013.10		Front	Coupe RWD N43B20A		Flexible Coupling	510641
	2009.06-2013.10		Front	Coupe RWD N43B20A		Flexible Coupling Kit	510596S
	2009.06-2013.10		Front	Coupe RWD N43B20A		Flexible Coupling Kit	510641S
123 xDrive							
2.0 (160 kw)	2024.11-		Centre	Hatchback 4WD B48 A20 P		Center Bearing Support	538640
	2024.11-		Front	Hatchback 4WD B48 A20 P		Flexible Coupling	510597
	2024.11-		Front	Hatchback 4WD B48 A20 P		Flexible Coupling Kit	510597S
123d							
2.0 (150 kw)	2007.07-2011.06		Centre	Hatchback RWD N47D20B/N47D20D		Center Bearing Support	538664
	2007.07-2011.06		Centre	Hatchback RWD N47D20B/N47D20D		Center Bearing Support	538672
	2007.07-2011.06		Front	Hatchback RWD N47D20B/N47D20D		Flexible Coupling	530758
	2007.07-2011.06		Front;Rear	Hatchback RWD N47D20B/N47D20D		Flexible Coupling	517955
	2007.07-2011.06		Front;Rear	Hatchback RWD N47D20B/N47D20D		Flexible Coupling	537668
	2007.07-2011.06		Front	Hatchback RWD N47D20B/N47D20D	MT	Flexible Coupling Kit	537668S
	2007.07-2011.06		Rear	Hatchback RWD N47D20B/N47D20D	MT	Flexible Coupling Kit	517957S
	2007.07-2011.06		Front;Rear	Hatchback RWD N47D20B/N47D20D		Flexible Coupling Kit	517955S
	2007.07-2012.09		Centre	Hatchback RWD N47D20B/N47D20D		Center Bearing Support	538664
	2007.07-2012.09		Centre	Hatchback RWD N47D20B/N47D20D		Center Bearing Support	538672
	2007.07-2012.09		Front	Hatchback RWD N47D20B/N47D20D	530160 and 530758 different structure	Flexible Coupling	530160
	2007.07-2012.09		Front	Hatchback RWD N47D20B/N47D20D	530758 and 530160 different structure	Flexible Coupling	530758
	2007.07-2012.09		Front;Rear	Hatchback RWD N47D20B/N47D20D		Flexible Coupling	517955
	2007.07-2012.09		Front;Rear	Hatchback RWD N47D20B/N47D20D		Flexible Coupling	537668
	2007.07-2012.09		Front	Hatchback RWD N47D20B/N47D20D	MT,Date to:2009.03	Flexible Coupling Kit	530758S
	2007.07-2012.09		Front	Hatchback RWD N47D20B/N47D20D	MT,Date from:2009.03	Flexible Coupling Kit	537668S

	YEAR	TRANSM.	FITTING POSITION	BODY STYLE & DRIVE TYPE & ENGINE	REMARKS	PRODUCT	GSP Ref.
BMW							
123d							
2.0 (150 kw)	2007.07-2012.09		Rear	Hatchback RWD N47D20B/N47D20D	MT	Flexible Coupling Kit	517957S
	2007.07-2012.09		Front;Rear	Hatchback RWD N47D20B/N47D20D		Flexible Coupling Kit	517955S
123d Cabrio							
2.0 (150 kw)	2008.09-2013.12		Centre	Cabriolet RWD N47D20B/N47D20D		Center Bearing Support	538664
	2008.09-2013.12		Centre	Cabriolet RWD N47D20B/N47D20D		Center Bearing Support	538672
	2008.09-2013.12		Front	Cabriolet RWD N47D20B/N47D20D	530160 and 530758 different structure	Flexible Coupling	530160
	2008.09-2013.12		Front	Cabriolet RWD N47D20B/N47D20D	530758 and 530160 different structure	Flexible Coupling	530758
	2008.09-2013.12		Front;Rear	Cabriolet RWD N47D20B/N47D20D		Flexible Coupling	517955
	2008.09-2013.12		Front;Rear	Cabriolet RWD N47D20B/N47D20D		Flexible Coupling	537668
	2008.09-2013.12		Front	Cabriolet RWD N47D20B/N47D20D	MT,Date to:2009.03	Flexible Coupling Kit	530758S
	2008.09-2013.12		Front	Cabriolet RWD N47D20B/N47D20D	MT,Date from:2009.03	Flexible Coupling Kit	537668S
	2008.09-2013.12		Rear	Cabriolet RWD N47D20B/N47D20D	MT	Flexible Coupling Kit	517957S
	2008.09-2013.12		Front;Rear	Cabriolet RWD N47D20B/N47D20D		Flexible Coupling Kit	517955S
123d Coupe							
2.0 (150 kw)	2007.09-2013.09		Centre	Coupe RWD N47D20B/N47D20D		Center Bearing Support	538664
	2007.09-2013.09		Centre	Coupe RWD N47D20B/N47D20D		Center Bearing Support	538672
	2007.09-2013.09		Front	Coupe RWD N47D20B/N47D20D	530160 and 530758 different structure	Flexible Coupling	530160
	2007.09-2013.09		Front	Coupe RWD N47D20B/N47D20D	530758 and 530160 different structure	Flexible Coupling	530758
	2007.09-2013.09		Rear	Coupe RWD N47D20B/N47D20D	AT	Flexible Coupling	533878
	2007.09-2013.09		Front;Rear	Coupe RWD N47D20B/N47D20D		Flexible Coupling	517955
	2007.09-2013.09		Front;Rear	Coupe RWD N47D20B/N47D20D		Flexible Coupling	537668
	2007.09-2013.09		Front	Coupe RWD N47D20B/N47D20D	MT,Date to:2009.03	Flexible Coupling Kit	530758S
	2007.09-2013.09		Front	Coupe RWD N47D20B/N47D20D	MT,Date from:2009.03	Flexible Coupling Kit	537668S
	2007.09-2013.09		Rear	Coupe RWD N47D20B/N47D20D	MT	Flexible Coupling Kit	517957S
	2007.09-2013.09		Front;Rear	Coupe RWD N47D20B/N47D20D		Flexible Coupling Kit	517955S
125d							
2.0 (155 kw)	2011.12-2019.05		Centre	Hatchback RWD B47D20B/N47D20D		Center Bearing Support	538672
	2011.12-2019.05		Front	Hatchback RWD B47D20B/N47D20D	AT	Flexible Coupling	537631
	2011.12-2019.05		Front;Rear	Hatchback RWD B47D20B/N47D20D		Flexible Coupling	517955
	2011.12-2019.05		Front	Hatchback RWD B47D20B/N47D20D		Flexible Coupling Kit	537669S
	2011.12-2019.05		Front;Rear	Hatchback RWD B47D20B/N47D20D		Flexible Coupling Kit	517955S
	2012.03-2019.06		Centre	Hatchback RWD B47D20B/N47D20D		Center Bearing Support	538672
	2012.03-2019.06		Front	Hatchback RWD B47D20B/N47D20D	AT	Flexible Coupling	537631
	2012.03-2019.06		Front;Rear	Hatchback RWD B47D20B/N47D20D		Flexible Coupling	517955
	2012.03-2019.06		Front	Hatchback RWD B47D20B/N47D20D		Flexible Coupling Kit	537669S
	2012.03-2019.06		Front;Rear	Hatchback RWD B47D20B/N47D20D		Flexible Coupling Kit	517955S
2.0 (160 kw)	2012.02-2015.02		Centre	Hatchback RWD N47D20D		Center Bearing Support	538672
	2012.02-2015.02		Front	Hatchback RWD N47D20D		Flexible Coupling	537631
	2012.02-2015.02		Front;Rear	Hatchback RWD N47D20D		Flexible Coupling	517955
	2012.02-2015.02		Front	Hatchback RWD N47D20D		Flexible Coupling Kit	537669S
	2012.02-2015.02		Front;Rear	Hatchback RWD N47D20D		Flexible Coupling Kit	517955S
	2012.03-2015.02		Centre	Hatchback RWD N47D20D		Center Bearing Support	538672
	2012.03-2015.02		Front	Hatchback RWD N47D20D		Flexible Coupling	537631
	2012.03-2015.02		Front;Rear	Hatchback RWD N47D20D		Flexible Coupling	517955
	2012.03-2015.02		Front	Hatchback RWD N47D20D		Flexible Coupling Kit	537669S
	2012.03-2015.02		Front;Rear	Hatchback RWD N47D20D		Flexible Coupling Kit	517955S
2.0 (165 kw)	2015.03-2019.05		Centre	Hatchback RWD B47D20B		Center Bearing Support	538672
	2015.03-2019.05		Front;Rear	Hatchback RWD B47D20B		Flexible Coupling	517955
	2015.03-2019.05		Front;Rear	Hatchback RWD B47D20B		Flexible Coupling Kit	517955S
	2015.03-2019.06		Centre	Hatchback RWD B47D20B		Center Bearing Support	538672
	2015.03-2019.06		Front;Rear	Hatchback RWD B47D20B		Flexible Coupling	517955
	2015.03-2019.06		Front;Rear	Hatchback RWD B47D20B		Flexible Coupling Kit	517955S
125i							
2.0 (160 kw)	2011.12-2019.12		Centre	Hatchback RWD N20B20A		Center Bearing Support	538672
	2011.12-2019.12		Front	Hatchback RWD N20B20A		Flexible Coupling	510596
	2011.12-2019.12		Front	Hatchback RWD N20B20A		Flexible Coupling	537625
	2011.12-2019.12		Front	Hatchback RWD N20B20A		Flexible Coupling Kit	510596S
	2011.12-2019.12		Front	Hatchback RWD N20B20A		Flexible Coupling Kit	537625S
	2012.03-2017.11		Centre	Hatchback RWD N20B20A		Center Bearing Support	538672
	2012.03-2017.11		Front	Hatchback RWD N20B20A		Flexible Coupling	510596
	2012.03-2017.11		Front	Hatchback RWD N20B20A		Flexible Coupling	537625
	2012.03-2017.11		Front	Hatchback RWD N20B20A		Flexible Coupling Kit	510596S
	2012.03-2017.11		Front	Hatchback RWD N20B20A		Flexible Coupling Kit	537625S

	YEAR	TRANSM.	FITTING POSITION	BODY STYLE & DRIVE TYPE & ENGINE	REMARKS	PRODUCT	GSP Ref.
BMW							
125i							
2.0 (165 kw)	2015.10-2019.06	AT	Rear	Hatchback RWD B48B20B		Propshaft	PS900611
	2015.10-2019.06		Centre	Hatchback RWD B48B20B		Center Bearing Support	538672
	2015.10-2019.06		Front	Hatchback RWD B48B20B		Flexible Coupling	510596
	2015.10-2019.06		Front	Hatchback RWD B48B20B		Flexible Coupling	537625
	2015.10-2019.06		Front	Hatchback RWD B48B20B		Flexible Coupling Kit	510596S
	2015.10-2019.06		Front	Hatchback RWD B48B20B		Flexible Coupling Kit	537625S
	2016.07-2019.06	AT	Rear	Hatchback RWD B48B20B		Propshaft	PS900611
	2016.07-2019.06		Centre	Hatchback RWD B48B20B		Center Bearing Support	538672
	2016.07-2019.06		Front	Hatchback RWD B48B20B		Flexible Coupling	510596
	2016.07-2019.06		Front	Hatchback RWD B48B20B		Flexible Coupling	537625
	2016.07-2019.06		Front	Hatchback RWD B48B20B		Flexible Coupling Kit	510596S
	2016.07-2019.06		Front	Hatchback RWD B48B20B		Flexible Coupling Kit	537625S
2.0 (175 kw)	2012.03-2017.11		Centre	Hatchback RWD N20B20A		Center Bearing Support	538672
	2012.03-2017.11		Front	Hatchback RWD N20B20A		Flexible Coupling	510596
	2012.03-2017.11		Front	Hatchback RWD N20B20A		Flexible Coupling	537625
	2012.03-2017.11		Front	Hatchback RWD N20B20A		Flexible Coupling Kit	510596S
	2012.03-2017.11		Front	Hatchback RWD N20B20A		Flexible Coupling Kit	537625S
	2012.07-2019.06		Centre	Hatchback RWD N20B20A		Center Bearing Support	538672
	2012.07-2019.06		Front	Hatchback RWD N20B20A		Flexible Coupling	510596
	2012.07-2019.06		Front	Hatchback RWD N20B20A		Flexible Coupling	537625
	2012.07-2019.06		Front	Hatchback RWD N20B20A		Flexible Coupling Kit	510596S
	2012.07-2019.06		Front	Hatchback RWD N20B20A		Flexible Coupling Kit	537625S
125i Cabrio							
3.0 (160 kw)	2007.12-2013.10		Centre	Cabriolet RWD N52B30A/N52B30B/N52B30BF		Center Bearing Support	538672
	2007.12-2013.10		Front	Cabriolet RWD N52B30A/N52B30B/N52B30BF	510596 and 537625 different structure	Flexible Coupling	510596
	2007.12-2013.10		Front	Cabriolet RWD N52B30A/N52B30B/N52B30BF	537625 and 510596 different structure	Flexible Coupling	537625
	2007.12-2013.10		Front	Cabriolet RWD N52B30A/N52B30B/N52B30BF		Flexible Coupling Kit	510596S
125i Coupe							
3.0 (160 kw)	2008.03-2013.10		Centre	Coupe RWD N52B30A/N52B30B/N52B30BF		Center Bearing Support	538672
	2008.03-2013.10		Front	Coupe RWD N52B30A/N52B30B/N52B30BF	510596 and 537625 different structure	Flexible Coupling	510596
	2008.03-2013.10		Front	Coupe RWD N52B30A/N52B30B/N52B30BF	537625 and 510596 different structure	Flexible Coupling	537625
	2008.03-2013.10		Front;Rear	Coupe RWD N52B30A/N52B30B/N52B30BF		Flexible Coupling	517955
	2008.03-2013.10		Front	Coupe RWD N52B30A/N52B30B/N52B30BF		Flexible Coupling Kit	510596S
128i Cabrio							
3.0 (172 kw)	2007.12-2013.10		Centre	Cabriolet RWD N52B30A		Center Bearing Support	538672
	2007.12-2013.10		Front	Cabriolet RWD N52B30A		Flexible Coupling	510596
128i Coupe							
3.0 (172 kw)	2007.10-2013.10		Centre	Coupe RWD N51 B30 A, N52 B30 A		Center Bearing Support	538672
	2007.10-2013.10		Front	Coupe RWD N51 B30 A, N52 B30 A		Flexible Coupling	510596
130i							
3.0 (190 kw)	2005.03-2012.09	MT	Rear	Hatchback RWD N52B30A/N52B30B/N52B30BF		Propshaft	PS901635
	2005.03-2012.09		Centre	Hatchback RWD N52B30A/N52B30B/N52B30BF		Center Bearing Support	538672
	2005.03-2012.09		Front	Hatchback RWD N52B30A/N52B30B/N52B30BF		Flexible Coupling	510596
	2005.03-2012.09		Rear	Hatchback RWD N52B30A/N52B30B/N52B30BF		Flexible Coupling	533878
	2005.03-2012.09		Front	Hatchback RWD N52B30A/N52B30B/N52B30BF		Flexible Coupling Kit	510596S
	2005.03-2012.09		Rear	Hatchback RWD N52B30A/N52B30B/N52B30BF		Flexible Coupling Kit	538112S
	2007.03-2011.06	MT	Rear	Hatchback RWD N52B30A/N52B30B/N52B30BF		Propshaft	PS901635
	2007.03-2011.06		Centre	Hatchback RWD N52B30A/N52B30B/N52B30BF		Center Bearing Support	538672
	2007.03-2011.06		Front	Hatchback RWD N52B30A/N52B30B/N52B30BF	510596 and 537625 different structure	Flexible Coupling	510596
	2007.03-2011.06		Front	Hatchback RWD N52B30A/N52B30B/N52B30BF	537625 and 510596 different structure	Flexible Coupling	537625
	2007.03-2011.06		Rear	Hatchback RWD N52B30A/N52B30B/N52B30BF		Flexible Coupling	533878
	2007.03-2011.06		Front	Hatchback RWD N52B30A/N52B30B/N52B30BF		Flexible Coupling Kit	510596S
	2007.03-2011.06		Rear	Hatchback RWD N52B30A/N52B30B/N52B30BF		Flexible Coupling Kit	538112S
3.0 (195 kw)	2005.09-2007.02	MT	Rear	Hatchback RWD N52B30A/N52B30BF		Propshaft	PS901635
	2005.09-2007.02		Centre	Hatchback RWD N52B30A/N52B30BF		Center Bearing Support	538672
	2005.09-2007.02		Front	Hatchback RWD N52B30A/N52B30BF	510596 and 537625 different structure	Flexible Coupling	510596
	2005.09-2007.02		Front	Hatchback RWD N52B30A/N52B30BF	537625 and 510596 different structure	Flexible Coupling	537625
	2005.09-2007.02		Rear	Hatchback RWD N52B30A/N52B30BF		Flexible Coupling	533878
	2005.09-2007.02		Front	Hatchback RWD N52B30A/N52B30BF		Flexible Coupling Kit	510596S
	2005.09-2007.02		Rear	Hatchback RWD N52B30A/N52B30BF		Flexible Coupling Kit	538112S
	2007.03-2012.09	MT	Rear	Hatchback RWD N52B30A/N52B30B/N52B30BF		Propshaft	PS901635
	2007.03-2012.09		Centre	Hatchback RWD N52B30A/N52B30B/N52B30BF		Center Bearing Support	538672
	2007.03-2012.09		Front	Hatchback RWD N52B30A/N52B30B/N52B30BF	510596 and 537625 different structure	Flexible Coupling	510596
	2007.03-2012.09		Front	Hatchback RWD N52B30A/N52B30B/N52B30BF	537625 and 510596 different structure	Flexible Coupling	537625

	YEAR	TRANSM.	FITTING POSITION	BODY STYLE & DRIVE TYPE & ENGINE	REMARKS	PRODUCT	GSP Ref.
BMW							
130i							
3.0 (195 kw)	2007.03-2012.09		Rear	Hatchback RWD N52B30A/N52B30B/N52B30BF		Flexible Coupling	533878
	2007.03-2012.09		Front	Hatchback RWD N52B30A/N52B30B/N52B30BF		Flexible Coupling Kit	510596S
	2007.03-2012.09		Rear	Hatchback RWD N52B30A/N52B30B/N52B30BF		Flexible Coupling Kit	538112S
135i Cabrio							
3.0 (225 kw)	2008.03-2013.10	MT	Rear	Cabriolet RWD N54B30A/N55B30A		Propshaft	PS901489
	2008.03-2013.10		Centre	Cabriolet RWD N54B30A/N55B30A		Center Bearing Support	538664
	2008.03-2013.10		Centre	Cabriolet RWD N54B30A/N55B30A		Center Bearing Support	538672
	2008.03-2013.10		Front;Rear	Cabriolet RWD N54B30A/N55B30A		Flexible Coupling	517955
	2008.03-2013.10		Front	Cabriolet RWD N54B30A/N55B30A		Flexible Coupling Kit	537669S
	2008.03-2013.10		Front;Rear	Cabriolet RWD N54B30A/N55B30A		Flexible Coupling Kit	517955S
3.0 (240 kw)	2008.03-2013.08	MT	Rear	Cabriolet RWD N55B30A		Propshaft	PS901489
	2008.03-2013.08		Centre	Cabriolet RWD N55B30A		Center Bearing Support	538664
	2008.03-2013.08		Front;Rear	Cabriolet RWD N55B30A		Flexible Coupling	517955
	2008.03-2013.08		Front	Cabriolet RWD N55B30A		Flexible Coupling Kit	537669S
	2008.03-2013.08		Front;Rear	Cabriolet RWD N55B30A		Flexible Coupling Kit	517955S
135i Coupe							
3.0 (225 kw)	2007.09-2013.10	MT	Rear	Coupe RWD N54B30A/N55B30A		Propshaft	PS901489
	2007.09-2013.10		Centre	Coupe RWD N54B30A/N55B30A		Center Bearing Support	538664
	2007.09-2013.10		Centre	Coupe RWD N54B30A/N55B30A		Center Bearing Support	538672
	2007.09-2013.10		Rear	Coupe RWD N54B30A/N55B30A		Flexible Coupling	533878
	2007.09-2013.10		Front;Rear	Coupe RWD N54B30A/N55B30A		Flexible Coupling	517955
	2007.09-2013.10		Front	Coupe RWD N54B30A/N55B30A		Flexible Coupling Kit	537669S
	2007.09-2013.10		Front;Rear	Coupe RWD N54B30A/N55B30A		Flexible Coupling Kit	517955S
3.0 (240 kw)	2007.10-2013.10	MT	Rear	Coupe RWD N55B30A		Propshaft	PS901489
	2007.10-2013.10		Centre	Coupe RWD N55B30A		Center Bearing Support	538664
	2007.10-2013.10		Front;Rear	Coupe RWD N55B30A		Flexible Coupling	517955
	2007.10-2013.10		Front;Rear	Coupe RWD N55B30A		Flexible Coupling Kit	517955S
218d Cabrio							
2.0 (100 kw)	2015.07-2020.09	AT	Rear	Cabriolet RWD B47D20A		Propshaft	PS900611
	2015.07-2020.09		Front	Cabriolet RWD B47D20A		Flexible Coupling	510596
	2015.07-2020.09		Front	Cabriolet RWD B47D20A		Flexible Coupling	537625
	2015.07-2020.09		Front	Cabriolet RWD B47D20A		Flexible Coupling Kit	510596S
	2015.07-2020.09		Front	Cabriolet RWD B47D20A		Flexible Coupling Kit	537625S
2.0 (110 kw)	2015.07-2020.09	AT	Rear	Cabriolet RWD B47D20A		Propshaft	PS900611
	2015.07-2020.09		Front	Cabriolet RWD B47D20A		Flexible Coupling	510596
	2015.07-2020.09		Front	Cabriolet RWD B47D20A		Flexible Coupling	537625
	2015.07-2020.09		Front	Cabriolet RWD B47D20A		Flexible Coupling Kit	510596S
	2015.07-2020.09		Front	Cabriolet RWD B47D20A		Flexible Coupling Kit	537625S
218d Coupe							
2.0 (100 kw)	2014.03-2020.09	AT	Rear	Coupe RWD B47D20A/N47D20C	For Modelcode:F22	Propshaft	PS900611
	2014.03-2020.09		Front	Coupe RWD B47D20A/N47D20C		Flexible Coupling	510596
	2014.03-2020.09		Front	Coupe RWD B47D20A/N47D20C		Flexible Coupling	537625
	2014.03-2020.09		Front	Coupe RWD B47D20A/N47D20C		Flexible Coupling Kit	510596S
	2014.03-2020.09		Front	Coupe RWD B47D20A/N47D20C		Flexible Coupling Kit	537625S
2.0 (105 kw)	2014.03-2015.06		Centre	Coupe RWD N47D20C		Center Bearing Support	538672
	2014.03-2015.06		Front	Coupe RWD N47D20C		Flexible Coupling	510596
	2014.03-2015.06		Front	Coupe RWD N47D20C		Flexible Coupling	537625
	2014.03-2015.06		Front	Coupe RWD N47D20C		Flexible Coupling Kit	510596S
	2014.03-2015.06		Front	Coupe RWD N47D20C		Flexible Coupling Kit	537625S
2.0 (110 kw)	2015.07-2020.09	AT	Rear	Coupe RWD B47D20A	For Modelcode:F22	Propshaft	PS900611
	2015.07-2020.09		Front	Coupe RWD B47D20A		Flexible Coupling	510596
	2015.07-2020.09		Front	Coupe RWD B47D20A		Flexible Coupling	537625
	2015.07-2020.09		Front	Coupe RWD B47D20A		Flexible Coupling Kit	510596S
	2015.07-2020.09		Front	Coupe RWD B47D20A		Flexible Coupling Kit	537625S
218d xDrive Active Tourer							
2.0 (100 kw)	2015.11-2021.10		Front	MPV 4WD B47C20A/B47C20B		Flexible Coupling	537625
	2015.11-2021.10		Rear	MPV 4WD B47C20A/B47C20B		Flexible Coupling	510597
	2015.11-2021.10		Front	MPV 4WD B47C20A/B47C20B		Flexible Coupling Kit	510596S
2.0 (110 kw)	2015.11-2021.10		Front	MPV 4WD B47C20A/B47C20B		Flexible Coupling	537625
	2015.11-2021.10		Rear	MPV 4WD B47C20A/B47C20B		Flexible Coupling	510597
	2015.11-2021.10		Front	MPV 4WD B47C20A/B47C20B		Flexible Coupling Kit	510596S
218d xDrive Gran Tourer							
2.0 (100 kw)	2015.03-		Front	MPV 4WD B47C20A/B47C20B		Flexible Coupling	510597
	2015.03-		Front	MPV 4WD B47C20A/B47C20B		Flexible Coupling Kit	510597S

	YEAR	TRANSM.	FITTING POSITION	BODY STYLE & DRIVE TYPE & ENGINE	REMARKS	PRODUCT	GSP Ref.
BMW							
218d xDrive Gran Tourer							
2.0 (110 kw)	2015.03-		Front	MPV 4WD B47C20A/B47C20B		Flexible Coupling	510597
	2015.03-		Front	MPV 4WD B47C20A/B47C20B		Flexible Coupling Kit	510597S
218i Cabrio							
1.5 (100 kw)	2015.01-2021.06		Centre	Cabriolet RWD B38B15A		Center Bearing Support	538672
	2015.01-2021.06		Front	Cabriolet RWD B38B15A	AT,Inner diameter:50mm,510596 and 537625 different structure	Flexible Coupling	510596
	2015.01-2021.06		Front	Cabriolet RWD B38B15A	MT,Inner diameter:38.5mm	Flexible Coupling	510597
	2015.01-2021.06		Front	Cabriolet RWD B38B15A	AT,Inner diameter:50mm,510596 and 537625 different structure	Flexible Coupling	537625
	2015.01-2021.06		Front	Cabriolet RWD B38B15A	Inner diameter:50mm,510596S and 537625S different structure	Flexible Coupling Kit	510596S
	2015.01-2021.06		Front	Cabriolet RWD B38B15A	Inner diameter:38.5mm	Flexible Coupling Kit	510597S
	2015.01-2021.06		Front	Cabriolet RWD B38B15A	Inner diameter:50mm,537625S and 510596S different structure	Flexible Coupling Kit	537625S
218i Coupe							
1.5 (100 kw)	2015.01-2021.06		Front	Coupe RWD B38B15A	AT,Inner diameter:50mm,510596 and 537625 different structure	Flexible Coupling	510596
	2015.01-2021.06		Front	Coupe RWD B38B15A	MT,Inner diameter:38.5mm	Flexible Coupling	510597
	2015.01-2021.06		Front	Coupe RWD B38B15A	AT,Inner diameter:50mm,510596 and 537625 different structure	Flexible Coupling	537625
	2015.01-2021.06		Front	Coupe RWD B38B15A	Inner diameter:50mm,510596S and 537625S different structure	Flexible Coupling Kit	510596S
	2015.01-2021.06		Front	Coupe RWD B38B15A	Inner diameter:38.5mm	Flexible Coupling Kit	510597S
	2015.01-2021.06		Front	Coupe RWD B38B15A	Inner diameter:50mm,537625S and 510596S different structure	Flexible Coupling Kit	537625S
220d Cabrio							
2.0 (120 kw)	2014.11-2020.09	AT	Rear	Cabriolet RWD B47D20A		Propshaft	PS900611
	2014.11-2020.09		Front	Cabriolet RWD B47D20A		Flexible Coupling	510596
	2014.11-2020.09		Front	Cabriolet RWD B47D20A		Flexible Coupling	537625
	2014.11-2020.09		Front;Rear	Cabriolet RWD B47D20A		Flexible Coupling	517955
	2014.11-2020.09		Front	Cabriolet RWD B47D20A		Flexible Coupling Kit	510596S
	2014.11-2020.09		Front	Cabriolet RWD B47D20A		Flexible Coupling Kit	537625S
2.0 (140 kw)	2014.10-2020.09	AT	Rear	Cabriolet RWD B47D20A		Propshaft	PS900611
	2014.10-2020.09		Front	Cabriolet RWD B47D20A		Flexible Coupling	510596
	2014.10-2020.09		Front	Cabriolet RWD B47D20A		Flexible Coupling	537625
	2014.10-2020.09		Front;Rear	Cabriolet RWD B47D20A		Flexible Coupling	517955
	2014.10-2020.09		Front	Cabriolet RWD B47D20A		Flexible Coupling Kit	510596S
	2014.10-2020.09		Front	Cabriolet RWD B47D20A		Flexible Coupling Kit	537625S
	2014.10-2020.09		Front;Rear	Cabriolet RWD B47D20A		Flexible Coupling Kit	517955S
2.0 (151 kw)	2014.03-2020.09	AT	Rear	Cabriolet RWD B47D20A		Propshaft	PS900611
220d Coupe							
2.0 (120 kw)	2014.11-2020.09	AT	Rear	Coupe RWD B47D20A/N47D20C	For Modelcode:F22	Propshaft	PS900611
	2014.11-2020.09		Centre	Coupe RWD B47D20A/N47D20C		Center Bearing Support	538672
	2014.11-2020.09		Front	Coupe RWD B47D20A/N47D20C		Flexible Coupling	510596
	2014.11-2020.09		Front	Coupe RWD B47D20A/N47D20C		Flexible Coupling	537625
	2014.11-2020.09		Front;Rear	Coupe RWD B47D20A/N47D20C		Flexible Coupling	517955
	2014.11-2020.09		Front	Coupe RWD B47D20A/N47D20C		Flexible Coupling Kit	510596S
	2014.11-2020.09		Front	Coupe RWD B47D20A/N47D20C		Flexible Coupling Kit	537625S
2.0 (135 kw)	2013.10-2017.06		Centre	Coupe RWD N47D20C		Center Bearing Support	538672
	2013.10-2017.06		Front	Coupe RWD N47D20C		Flexible Coupling	510596
	2013.10-2017.06		Front	Coupe RWD N47D20C		Flexible Coupling	537625
	2013.10-2017.06		Front;Rear	Coupe RWD N47D20C		Flexible Coupling	517955
	2013.10-2017.06		Front	Coupe RWD N47D20C		Flexible Coupling Kit	510596S
	2013.10-2017.06		Front	Coupe RWD N47D20C		Flexible Coupling Kit	537625S
2.0 (140 kw)	2014.11-2020.09	AT	Rear	Coupe RWD B47D20A	For Modelcode:F22	Propshaft	PS900611
	2014.11-2020.09		Front	Coupe RWD B47D20A		Flexible Coupling	510596
	2014.11-2020.09		Front	Coupe RWD B47D20A		Flexible Coupling	537625
	2014.11-2020.09		Front;Rear	Coupe RWD B47D20A		Flexible Coupling	517955
	2014.11-2020.09		Front	Coupe RWD B47D20A		Flexible Coupling Kit	510596S
	2014.11-2020.09		Front	Coupe RWD B47D20A		Flexible Coupling Kit	537625S
	2014.11-2020.09		Front;Rear	Coupe RWD B47D20A		Flexible Coupling Kit	517955S
	2021.08-		Front	Coupe RWD B47D20B	Width:30mm	Flexible Coupling	510596
2.0 (147 kw)	2014.03-2017.06		Front	Coupe RWD N47D20C		Flexible Coupling	510596
	2014.03-2017.06		Front	Coupe RWD N47D20C		Flexible Coupling	537625
	2014.03-2017.06		Front;Rear	Coupe RWD N47D20C		Flexible Coupling	517955
	2014.03-2017.06		Front	Coupe RWD N47D20C		Flexible Coupling Kit	510596S
	2014.03-2017.06		Front	Coupe RWD N47D20C		Flexible Coupling Kit	537625S
2.0 (151 kw)	2014.03-2020.09	AT	Rear	Coupe RWD B47D20A	For Modelcode:F22	Propshaft	PS900611
220d xDrive Active Tourer							
2.0 (120 kw)	2014.11-2021.10		Front	MPV 4WD B47C20A/B47C20B		Flexible Coupling	537625
	2014.11-2021.10		Rear	MPV 4WD B47C20A/B47C20B		Flexible Coupling	510597
	2014.11-2021.10		Front	MPV 4WD B47C20A/B47C20B		Flexible Coupling Kit	510596S

	YEAR	TRANSM.	FITTING POSITION	BODY STYLE & DRIVE TYPE & ENGINE	REMARKS	PRODUCT	GSP Ref.
BMW							
220d xDrive Active Tourer							
2.0 (140 kw)	2014.09-2021.10		Front	MPV 4WD B47C20A/B47C20B		Flexible Coupling	537625
	2014.09-2021.10		Rear	MPV 4WD B47C20A/B47C20B		Flexible Coupling	510597
	2014.09-2021.10		Front	MPV 4WD B47C20A/B47C20B		Flexible Coupling Kit	510596S
220d xDrive Coupe							
2.0 (120 kw)	2015.03-2020.09		Centre	Coupe 4WD B47D20A		Center Bearing Support	538672
	2015.03-2020.09		Front	Coupe 4WD B47D20A		Flexible Coupling	537625
	2015.03-2020.09		Front	Coupe 4WD B47D20A	510596S and 537625S different structure	Flexible Coupling Kit	510596S
	2015.03-2020.09		Front	Coupe 4WD B47D20A	537625S and 510596S different structure	Flexible Coupling Kit	537625S
2.0 (140 kw)	2015.01-2020.09		Centre	Coupe 4WD B47D20A		Center Bearing Support	538672
	2015.01-2020.09		Front	Coupe 4WD B47D20A		Flexible Coupling	537625
	2015.01-2020.09		Front	Coupe 4WD B47D20A	510596S and 537625S different structure	Flexible Coupling Kit	510596S
	2015.01-2020.09		Front	Coupe 4WD B47D20A	537625S and 510596S different structure	Flexible Coupling Kit	537625S
2.0 (151 kw)	2014.06-2020.09		Centre	Coupe 4WD B47D20A		Center Bearing Support	538672
220d xDrive Gran Coupe							
2.0 (140 kw)	2019.11-		Centre	Coupe 4WD B47C20B		Center Bearing Support	538640
	2019.11-		Front	Coupe 4WD B47C20B		Flexible Coupling	510597
	2019.11-		Front	Coupe 4WD B47C20B		Flexible Coupling Kit	510597S
220d xDrive Gran Tourer							
2.0 (120 kw)	2015.03-		Front	MPV 4WD B47C20A/B47C20B		Flexible Coupling	510597
	2015.03-		Front	MPV 4WD B47C20A/B47C20B		Flexible Coupling Kit	510597S
2.0 (140 kw)	2015.03-		Front	MPV 4WD B47C20A/B47C20B		Flexible Coupling	510597
	2015.03-		Front	MPV 4WD B47C20A/B47C20B		Flexible Coupling Kit	510597S
220i Cabrio							
2.0 (135 kw)	2014.10-2021.06		Front	Cabriolet RWD N20B20A/N20B20B		Flexible Coupling	510596
	2014.10-2021.06		Front	Cabriolet RWD N20B20A/N20B20B		Flexible Coupling	510597
	2014.10-2021.06		Front	Cabriolet RWD N20B20A/N20B20B		Flexible Coupling	537625
	2014.10-2021.06		Front	Cabriolet RWD N20B20A/N20B20B	Inner diameter:50mm,510596S and 537625S different structure	Flexible Coupling Kit	510596S
	2014.10-2021.06		Front	Cabriolet RWD N20B20A/N20B20B	Inner diameter:38.5mm	Flexible Coupling Kit	510597S
	2014.10-2021.06		Front	Cabriolet RWD N20B20A/N20B20B	Inner diameter:50mm,537625S and 510596S different structure	Flexible Coupling Kit	537625S
	2015.09-2021.06		Front	Cabriolet RWD B48B20A		Flexible Coupling	510596
	2015.09-2021.06		Front	Cabriolet RWD B48B20A		Flexible Coupling	537625
	2015.09-2021.06		Front	Cabriolet RWD B48B20A		Flexible Coupling Kit	510596S
	2015.09-2021.06		Front	Cabriolet RWD B48B20A		Flexible Coupling Kit	537625S
220i Coupe							
2.0 (135 kw)	2013.10-2021.06		Front	Coupe RWD N20B20A/N20B20B		Flexible Coupling	510596
	2013.10-2021.06		Front	Coupe RWD N20B20A/N20B20B		Flexible Coupling	510597
	2013.10-2021.06		Front	Coupe RWD N20B20A/N20B20B		Flexible Coupling	537625
	2013.10-2021.06		Front	Coupe RWD N20B20A/N20B20B	Inner diameter:50mm,510596S and 537625S different structure	Flexible Coupling Kit	510596S
	2013.10-2021.06		Front	Coupe RWD N20B20A/N20B20B	Inner diameter:38.5mm	Flexible Coupling Kit	510597S
	2013.10-2021.06		Front	Coupe RWD N20B20A/N20B20B	Inner diameter:50mm,537625S and 510596S different structure	Flexible Coupling Kit	537625S
	2015.09-2021.06		Front	Coupe RWD B48B20A		Flexible Coupling	510596
	2015.09-2021.06		Front	Coupe RWD B48B20A		Flexible Coupling	537625
	2015.09-2021.06		Front	Coupe RWD B48B20A		Flexible Coupling Kit	510596S
	2015.09-2021.06		Front	Coupe RWD B48B20A		Flexible Coupling Kit	537625S
	2021.08-		Front	Coupe RWD B48B20A	Width:30mm	Flexible Coupling	510596
220i xDrive Gran Coupe							
2.0 (131 kw)	2021.03-		Centre	Coupe 4WD B48A20A		Center Bearing Support	538640
	2021.03-		Front	Coupe 4WD B48A20A		Flexible Coupling	510597
	2021.03-		Front	Coupe 4WD B48A20A		Flexible Coupling Kit	510597S
223d xDrive Active Tourer							
2.0 (155 kw)	2022.07-		Centre	MPV 4WD B47C20B		Center Bearing Support	538640
	2022.07-		Front	MPV 4WD B47C20B		Flexible Coupling	510597
	2022.07-		Front	MPV 4WD B47C20B		Flexible Coupling Kit	510597S
223i xDrive Active Tourer							
2.0 (160 kw)	2022.03-		Centre	MPV 4WD B48A20P		Center Bearing Support	538640
	2022.03-		Front	MPV 4WD B48A20P		Flexible Coupling	510597
	2022.03-		Front	MPV 4WD B48A20P		Flexible Coupling Kit	510597S
225d Cabrio							
2.0 (165 kw)	2015.07-2019.05		Front;Rear	Cabriolet RWD B47D20B		Flexible Coupling	517955
	2015.07-2019.05		Front;Rear	Cabriolet RWD B47D20B		Flexible Coupling Kit	517955S
225d Coupe							
2.0 (160 kw)	2014.01-2017.06		Front;Rear	Coupe RWD N47D20D		Flexible Coupling	517955
	2014.01-2017.06		Front	Coupe RWD N47D20D		Flexible Coupling Kit	537669S
	2014.01-2017.06		Front;Rear	Coupe RWD N47D20D		Flexible Coupling Kit	517955S

	YEAR	TRANSM.	FITTING POSITION	BODY STYLE & DRIVE TYPE & ENGINE	REMARKS	PRODUCT	GSP Ref.
BMW							
225d Coupe							
2.0 (165 kw)	2015.07-2019.05		Front;Rear	Coupe RWD B47D20B		Flexible Coupling	517955
	2015.07-2019.05		Front;Rear	Coupe RWD B47D20B		Flexible Coupling Kit	517955S
225e xDrive Active Tourer							
1.5 (180 kw)	2021.11-		Centre	MPV 4WD B38A15P		Center Bearing Support	538640
	2021.11-		Front	MPV 4WD B38A15P		Flexible Coupling	510597
	2021.11-		Front	MPV 4WD B38A15P		Flexible Coupling Kit	510597S
225i xDrive Active Tourer							
2.0 (170 kw)	2014.09-2021.10		Front	MPV 4WD B48A20B		Flexible Coupling	510597
	2014.09-2021.10		Front	MPV 4WD B48A20B		Flexible Coupling Kit	510597S
228i Cabrio							
2.0 (180 kw)	2014.10-2016.06	AT	Rear	Cabriolet RWD N20B20A		Propshaft	PS900611
	2014.10-2016.06		Centre	Cabriolet RWD N20B20A		Center Bearing Support	538672
	2014.10-2016.06		Front	Cabriolet RWD N20B20A		Flexible Coupling	510596
	2014.10-2016.06		Front	Cabriolet RWD N20B20A		Flexible Coupling	537625
	2014.10-2016.06		Front;Rear	Cabriolet RWD N20B20A		Flexible Coupling	517955
	2014.10-2016.06		Front	Cabriolet RWD N20B20A		Flexible Coupling Kit	510596S
	2014.10-2016.06		Front	Cabriolet RWD N20B20A		Flexible Coupling Kit	537625S
	2014.10-2016.06		Front;Rear	Cabriolet RWD N20B20A		Flexible Coupling Kit	517955S
228i Coupe							
2.0 (180 kw)	2014.07-2016.06	AT	Rear	Coupe RWD N20B20A	For Modelcode:F22	Propshaft	PS900611
	2014.07-2016.06		Front	Coupe RWD N20B20A		Flexible Coupling	510596
	2014.07-2016.06		Front	Coupe RWD N20B20A		Flexible Coupling	537625
	2014.07-2016.06		Front	Coupe RWD N20B20A		Flexible Coupling Kit	510596S
	2014.07-2016.06		Front	Coupe RWD N20B20A		Flexible Coupling Kit	537625S
228i xDrive Gran Coupe							
2.0 (170 kw)	2019.11-		Front	Coupe 4WD B46A20B		Flexible Coupling Kit	510597S
230e xDrive Active Tourer							
1.5 (240 kw)	2021.11-		Centre	MPV 4WD B38A15P		Center Bearing Support	538640
	2021.11-		Front	MPV 4WD B38A15P		Flexible Coupling	510597
	2021.11-		Front	MPV 4WD B38A15P		Flexible Coupling Kit	510597S
230i Cabrio							
2.0 (185 kw)	2016.07-2021.06	8AT	Rear	Cabriolet RWD B48B20B	Model year to:2017;for OE No.:26107639214	Propshaft	PS900135
	2016.07-2021.06	AT	Rear	Cabriolet RWD B48B20B	for OE No.:26107645651	Propshaft	PS900611
	2016.07-2021.06		Front	Cabriolet RWD B48B20B		Flexible Coupling	510596
	2016.07-2021.06		Front	Cabriolet RWD B48B20B		Flexible Coupling	537625
	2016.07-2021.06		Front	Cabriolet RWD B48B20B		Flexible Coupling Kit	510596S
	2016.07-2021.06		Front	Cabriolet RWD B48B20B		Flexible Coupling Kit	537625S
230i Coupe							
2.0 (185 kw)	2016.07-2021.06	AT	Rear	Coupe RWD B48B20B	For Modelcode:F22	Propshaft	PS900611
	2016.07-2021.06		Front	Coupe RWD B48B20B		Flexible Coupling	510596
	2016.07-2021.06		Front	Coupe RWD B48B20B		Flexible Coupling	537625
	2016.07-2021.06		Front	Coupe RWD B48B20B		Flexible Coupling Kit	510596S
	2016.07-2021.06		Front	Coupe RWD B48B20B		Flexible Coupling Kit	537625S
3 ActiveHybrid							
3.0 (250 kw)	2012.07-2015.06		Centre	Saloon RWD N55B30A		Center Bearing Support	538672
	2012.07-2015.06		Front;Rear	Saloon RWD N55B30A		Flexible Coupling	517955
	2012.07-2015.06		Front	Saloon RWD N55B30A		Flexible Coupling Kit	537669S
	2012.07-2015.06		Front;Rear	Saloon RWD N55B30A		Flexible Coupling Kit	517955S
316d							
2.0 (85 kw)	2009.07-2011.12		Centre	Saloon RWD N47D20C		Center Bearing Support	538672
	2009.07-2011.12		Front	Saloon RWD N47D20C	510596 and 537625 different structure	Flexible Coupling	510596
	2009.07-2011.12		Front	Saloon RWD N47D20C	537625 and 510596 different structure	Flexible Coupling	537625
	2009.07-2011.12		Rear	Saloon RWD N47D20C		Flexible Coupling	533878
	2009.07-2011.12		Front	Saloon RWD N47D20C		Flexible Coupling Kit	510596S
	2009.07-2011.12		Rear	Saloon RWD N47D20C		Flexible Coupling Kit	538112S
	2012.03-2018.10		Centre	Saloon RWD B47D20A/N47D20C		Center Bearing Support	538672
	2012.03-2018.10		Front	Saloon RWD B47D20A/N47D20C		Flexible Coupling	510596
	2012.03-2018.10		Front	Saloon RWD B47D20A/N47D20C		Flexible Coupling	537625
	2012.03-2018.10		Front	Saloon RWD B47D20A/N47D20C		Flexible Coupling Kit	510596S
	2012.03-2018.10		Front	Saloon RWD B47D20A/N47D20C		Flexible Coupling Kit	537625S
316d Touring							
2.0 (85 kw)	2009.09-2012.10		Centre	Estate RWD N47D20C		Center Bearing Support	538672
	2009.09-2012.10		Front	Estate RWD N47D20C		Flexible Coupling	510596
	2009.09-2012.10		Rear	Estate RWD N47D20C		Flexible Coupling	533878

	YEAR	TRANSM.	FITTING POSITION	BODY STYLE & DRIVE TYPE & ENGINE	REMARKS	PRODUCT	GSP Ref.
BMW							
316d Touring							
2.0 (85 kw)	2009.09-2012.10		Front	Estate RWD N47D20C		Flexible Coupling Kit	510596S
	2009.09-2012.10		Rear	Estate RWD N47D20C		Flexible Coupling Kit	538112S
	2012.11-2019.06		Centre	Estate RWD B47D20A/N47D20C		Center Bearing Support	538672
	2012.11-2019.06		Front	Estate RWD B47D20A/N47D20C		Flexible Coupling	510596
	2012.11-2019.06		Front	Estate RWD B47D20A/N47D20C		Flexible Coupling	537625
	2012.11-2019.06		Front	Estate RWD B47D20A/N47D20C		Flexible Coupling Kit	510596S
	2012.11-2019.06		Front	Estate RWD B47D20A/N47D20C		Flexible Coupling Kit	537625S
316i							
1.6 (75 kw)	1993.09-1998.05		Centre	Saloon RWD M43B164E2	Installation size:160mm	Center Bearing Support	538661
	1993.09-1998.05		Centre	Saloon RWD M43B164E2	Installation size:130.6mm	Center Bearing Support	538677
	1993.09-1998.05		Front	Saloon RWD M43B164E2		Flexible Coupling	510597
	1993.09-1998.05		Front	Saloon RWD M43B164E2		Flexible Coupling	510641
	1993.09-1998.05		Front	Saloon RWD M43B164E2	MT	Flexible Coupling Kit	510597S
	1993.09-1998.05		Front	Saloon RWD M43B164E2	AT	Flexible Coupling Kit	510641S
1.6 (77 kw)	2000.04-2005.02	MT	Rear	Saloon RWD M43B164E3		Propshaft	PS901493
	2000.04-2005.02		Centre	Saloon RWD M43B164E3	MT	Center Bearing Support	538653
	2000.04-2005.02		Centre	Saloon RWD M43B164E3	AT	Center Bearing Support	538661
	2000.04-2005.02		Centre	Saloon RWD M43B164E3	MT	Center Bearing Support	538665
	2000.04-2005.02		Front	Saloon RWD M43B164E3		Flexible Coupling	510597
	2000.04-2005.02		Front	Saloon RWD M43B164E3		Flexible Coupling Kit	510597S
1.6 (85 kw)	2002.06-2005.02	MT	Rear	Saloon RWD N40B16A/N45B16A		Propshaft	PS901493
	2002.06-2005.02		Centre	Saloon RWD N40B16A/N45B16A		Center Bearing Support	538661
	2002.06-2005.02		Centre	Saloon RWD N40B16A/N45B16A		Center Bearing Support	538665
	2002.06-2005.02		Front	Saloon RWD N40B16A/N45B16A	Width:32mm	Flexible Coupling	510597
	2002.06-2005.02		Front	Saloon RWD N40B16A/N45B16A	Width:28mm	Flexible Coupling	510641
	2002.06-2005.02		Front	Saloon RWD N40B16A/N45B16A		Flexible Coupling Kit	510641S
	2005.09-2011.10		Centre	Saloon RWD N45B16A/N45B16AC		Center Bearing Support	538672
	2005.09-2011.10		Front	Saloon RWD N45B16A/N45B16AC		Flexible Coupling	510596
	2005.09-2011.10		Front	Saloon RWD N45B16A/N45B16AC		Flexible Coupling	510641
	2005.09-2011.10		Front	Saloon RWD N45B16A/N45B16AC		Flexible Coupling Kit	510596S
	2005.09-2011.10		Front	Saloon RWD N45B16A/N45B16AC		Flexible Coupling Kit	510641S
1.6 (90 kw)	2007.09-2011.10	6AT	Rear	Saloon RWD N43B16A/N43B16AA	Model year to:2008	Propshaft	PS900125
	2007.09-2011.10		Centre	Saloon RWD N43B16A/N43B16AA		Center Bearing Support	538672
	2007.09-2011.10		Front	Saloon RWD N43B16A/N43B16AA		Flexible Coupling	510596
	2007.09-2011.10		Front	Saloon RWD N43B16A/N43B16AA		Flexible Coupling	510641
	2007.09-2011.10		Front	Saloon RWD N43B16A/N43B16AA		Flexible Coupling Kit	510596S
	2007.09-2011.10		Front	Saloon RWD N43B16A/N43B16AA		Flexible Coupling Kit	510641S
1.6 (100 kw)	2012.07-2016.08		Centre	Saloon RWD N13B16A		Center Bearing Support	538672
	2012.07-2016.08		Front	Saloon RWD N13B16A		Flexible Coupling	510596
	2012.07-2016.08		Front	Saloon RWD N13B16A		Flexible Coupling	510597
	2012.07-2016.08		Front	Saloon RWD N13B16A		Flexible Coupling	537625
	2012.07-2016.08		Front	Saloon RWD N13B16A	Inner diameter:50mm,510596S and 537625S different structure	Flexible Coupling Kit	510596S
	2012.07-2016.08		Front	Saloon RWD N13B16A	Inner diameter:38.5mm	Flexible Coupling Kit	510597S
	2012.07-2016.08		Front	Saloon RWD N13B16A	Inner diameter:50mm,537625S and 510596S different structure	Flexible Coupling Kit	537625S
1.8 (85 kw)	2001.07-2005.02	AT	Rear	Saloon RWD N42B18A/N46B18A		Propshaft	PS900116
	2001.07-2005.02	MT	Rear	Saloon RWD N42B18A/N46B18A		Propshaft	PS901493
	2001.07-2005.02		Centre	Saloon RWD N42B18A/N46B18A	Height:45mm	Center Bearing Support	538653
	2001.07-2005.02		Centre	Saloon RWD N42B18A/N46B18A	Height:46mm	Center Bearing Support	538661
	2001.07-2005.02		Centre	Saloon RWD N42B18A/N46B18A	Height:23.5mm	Center Bearing Support	538665
	2001.07-2005.02		Front	Saloon RWD N42B18A/N46B18A	Inner diameter:50mm,510596 and 537625 different structure	Flexible Coupling	510596
	2001.07-2005.02		Front	Saloon RWD N42B18A/N46B18A	Engine Code:N42 B18 A;MT;Inner diameter:38mm,Width:32mm	Flexible Coupling	510597
	2001.07-2005.02		Front	Saloon RWD N42B18A/N46B18A	Inner diameter:38.5mm,Width:28mm	Flexible Coupling	510641
	2001.07-2005.02		Front	Saloon RWD N42B18A/N46B18A	Inner diameter:50mm,537625 and 510596 different structure	Flexible Coupling	537625
	2001.07-2005.02		Front	Saloon RWD N42B18A/N46B18A		Flexible Coupling Kit	510596S
	2001.07-2005.02		Front	Saloon RWD N42B18A/N46B18A		Flexible Coupling Kit	510597S
	2001.07-2005.02		Front	Saloon RWD N42B18A/N46B18A		Flexible Coupling Kit	510641S
1.9 (77 kw)	1998.12-2002.02	MT	Rear	Saloon RWD M43B194E1		Propshaft	PS901493
	1998.12-2002.02		Centre	Saloon RWD M43B194E1	Height:45mm	Center Bearing Support	538653
	1998.12-2002.02		Centre	Saloon RWD M43B194E1	Height:46mm	Center Bearing Support	538661
	1998.12-2002.02		Centre	Saloon RWD M43B194E1	Height:23.5mm	Center Bearing Support	538665
	1998.12-2002.02		Front	Saloon RWD M43B194E1		Flexible Coupling	510597
	1998.12-2002.02		Front	Saloon RWD M43B194E1		Flexible Coupling Kit	510597S

	YEAR	TRANSM.	FITTING POSITION	BODY STYLE & DRIVE TYPE & ENGINE	REMARKS	PRODUCT	GSP Ref.
BMW							
316i Compact							
1.6 (75 kw)	1994.01-2000.08		Centre	Hatchback RWD M43B164E2		Center Bearing Support	538661
	1994.01-2000.08		Front	Hatchback RWD M43B164E2		Flexible Coupling	510597
	1994.01-2000.08		Front	Hatchback RWD M43B164E2		Flexible Coupling	510641
	1994.01-2000.08		Front	Hatchback RWD M43B164E2	MT	Flexible Coupling Kit	510597S
	1994.01-2000.08		Front	Hatchback RWD M43B164E2	AT	Flexible Coupling Kit	510641S
	1996.02-2000.08		Centre	Hatchback RWD M43B164E2CNG	Installation size:160mm	Center Bearing Support	538661
	1996.02-2000.08		Centre	Hatchback RWD M43B164E2CNG	Installation size:130.6mm	Center Bearing Support	538677
	1996.02-2000.08		Front	Hatchback RWD M43B164E2CNG	Width:32mm	Flexible Coupling	510597
	1996.02-2000.08		Front	Hatchback RWD M43B164E2CNG	Width:28mm	Flexible Coupling	510641
	1996.02-2000.08		Front	Hatchback RWD M43B164E2CNG	MT	Flexible Coupling Kit	510597S
1.6 (77 kw)	2002.06-2005.02	MT	Rear	Hatchback RWD N40B16A/N45B16A		Propshaft	PS901493
	2002.06-2005.02		Centre	Hatchback RWD N40B16A/N45B16A		Center Bearing Support	538665
	2002.06-2005.02		Front	Hatchback RWD N40B16A/N45B16A		Flexible Coupling	510597
	2002.06-2005.02		Front	Hatchback RWD N40B16A/N45B16A		Flexible Coupling Kit	510597S
1.6 (85 kw)	2002.06-2005.02	MT	Rear	Hatchback RWD N40B16A/N45B16A		Propshaft	PS901493
	2002.06-2005.02		Centre	Hatchback RWD N40B16A/N45B16A		Center Bearing Support	538665
	2002.06-2005.02		Front	Hatchback RWD N40B16A/N45B16A		Flexible Coupling	510641
	2002.06-2005.02		Front	Hatchback RWD N40B16A/N45B16A		Flexible Coupling Kit	510641S
1.8 (85 kw)	2001.06-2005.02	AT	Rear	Hatchback RWD N42B18A/N46B18A		Propshaft	PS900116
	2001.06-2005.02	MT	Rear	Hatchback RWD N42B18A/N46B18A		Propshaft	PS901493
	2001.06-2005.02		Centre	Hatchback RWD N42B18A/N46B18A		Center Bearing Support	538653
	2001.06-2005.02		Centre	Hatchback RWD N42B18A/N46B18A		Center Bearing Support	538665
	2001.06-2005.02		Front	Hatchback RWD N42B18A/N46B18A	Inner diameter:50mm,510596 and 537625 different structure	Flexible Coupling	510596
	2001.06-2005.02		Front	Hatchback RWD N42B18A/N46B18A	Engine Code:N42 B18 A;MT;Inner diameter:38mm,Width:32mm	Flexible Coupling	510597
	2001.06-2005.02		Front	Hatchback RWD N42B18A/N46B18A	Inner diameter:38.5mm,Width:28mm	Flexible Coupling	510641
	2001.06-2005.02		Front	Hatchback RWD N42B18A/N46B18A	Inner diameter:50mm,537625 and 510596 different structure	Flexible Coupling	537625
	2001.06-2005.02		Front	Hatchback RWD N42B18A/N46B18A		Flexible Coupling Kit	510596S
	2001.06-2005.02		Front	Hatchback RWD N42B18A/N46B18A		Flexible Coupling Kit	510597S
	2001.06-2005.02		Front	Hatchback RWD N42B18A/N46B18A		Flexible Coupling Kit	510641S
1.9 (77 kw)	1999.01-2000.08		Centre	Hatchback RWD M43B194E1		Center Bearing Support	538661
	1999.01-2000.08		Front	Hatchback RWD M43B194E1		Flexible Coupling	510597
	1999.01-2000.08		Front	Hatchback RWD M43B194E1		Flexible Coupling	510641
	1999.01-2000.08		Front	Hatchback RWD M43B194E1	MT	Flexible Coupling Kit	510597S
	1999.01-2000.08		Front	Hatchback RWD M43B194E1	AT	Flexible Coupling Kit	510641S
316i Coupe							
1.6 (75 kw)	1993.09-1998.11		Centre	Coupe RWD M43B164E2	Installation size:160mm	Center Bearing Support	538661
	1993.09-1998.11		Centre	Coupe RWD M43B164E2	Installation size:130.6mm	Center Bearing Support	538677
	1993.09-1998.11		Front	Coupe RWD M43B164E2		Flexible Coupling	510597
	1993.09-1998.11		Front	Coupe RWD M43B164E2		Flexible Coupling	510641
	1993.09-1998.11		Front	Coupe RWD M43B164E2	Width:32mm	Flexible Coupling Kit	510597S
	1993.09-1998.11		Front	Coupe RWD M43B164E2	Width:28mm	Flexible Coupling Kit	510641S
1.6 (77 kw)	2000.04-2003.10	MT	Rear	Coupe RWD M43B164E3		Propshaft	PS901493
	2000.04-2003.10		Centre	Coupe RWD M43B164E3	Installation size:160mm	Center Bearing Support	538653
	2000.04-2003.10		Centre	Coupe RWD M43B164E3	AT	Center Bearing Support	538661
	2000.04-2003.10		Centre	Coupe RWD M43B164E3	MT,Installation size:124.6mm	Center Bearing Support	538665
	2000.04-2003.10		Front	Coupe RWD M43B164E3		Flexible Coupling	510597
	2000.04-2003.10		Front	Coupe RWD M43B164E3	MT	Flexible Coupling Kit	510597S
1.6 (85 kw)	2002.06-2006.07	MT	Rear	Coupe RWD N45B16A		Propshaft	PS901493
	2002.06-2006.07		Centre	Coupe RWD N45B16A		Center Bearing Support	538665
	2002.06-2006.07		Front	Coupe RWD N45B16A		Flexible Coupling	510641
	2002.06-2006.07		Front	Coupe RWD N45B16A		Flexible Coupling Kit	510641S
1.6 (90 kw)	2007.09-2013.06	MT	Rear	Coupe RWD N43B16AA	Model year to:2010	Propshaft	PS900125
	2007.09-2013.06		Centre	Coupe RWD N43B16AA		Center Bearing Support	538672
	2007.09-2013.06		Front	Coupe RWD N43B16AA		Flexible Coupling	510596
	2007.09-2013.06		Front	Coupe RWD N43B16AA		Flexible Coupling	510641
	2007.09-2013.06		Front	Coupe RWD N43B16AA		Flexible Coupling Kit	510596S
	2007.09-2013.06		Front	Coupe RWD N43B16AA		Flexible Coupling Kit	510641S
316i Touring							
1.6 (75 kw)	1997.03-1999.05		Centre	Estate RWD M43B164E2		Center Bearing Support	538661
	1997.03-1999.05		Front	Estate RWD M43B164E2		Flexible Coupling	510597
	1997.03-1999.05		Front	Estate RWD M43B164E2		Flexible Coupling	510641
	1997.03-1999.05		Front	Estate RWD M43B164E2		Flexible Coupling Kit	510641S
1.6 (90 kw)	2008.09-2012.06		Centre	Estate RWD N43B16AA		Center Bearing Support	538672
	2008.09-2012.06		Front	Estate RWD N43B16AA		Flexible Coupling	510596

	YEAR	TRANSM.	FITTING POSITION	BODY STYLE & DRIVE TYPE & ENGINE	REMARKS	PRODUCT	GSP Ref.
BMW							
316i Touring							
1.6 (90 kw)	2008.09-2012.06		Front	Estate RWD N43B16AA		Flexible Coupling	510641
	2008.09-2012.06		Front	Estate RWD N43B16AA		Flexible Coupling Kit	510596S
	2008.09-2012.06		Front	Estate RWD N43B16AA		Flexible Coupling Kit	510641S
1.6 (100 kw)	2013.03-2015.06		Centre	Estate RWD N13B16A		Center Bearing Support	538672
	2013.03-2015.06		Front	Estate RWD N13B16A		Flexible Coupling	510596
	2013.03-2015.06		Front	Estate RWD N13B16A		Flexible Coupling	510597
	2013.03-2015.06		Front	Estate RWD N13B16A		Flexible Coupling	537625
	2013.03-2015.06		Front	Estate RWD N13B16A	Inner diameter:50mm,510596S and 537625S different structure	Flexible Coupling Kit	510596S
	2013.03-2015.06		Front	Estate RWD N13B16A	Inner diameter:38.5mm	Flexible Coupling Kit	510597S
	2013.03-2015.06		Front	Estate RWD N13B16A	Inner diameter:50mm,537625S and 510596S different structure	Flexible Coupling Kit	537625S
1.8 (85 kw)	2001.07-2005.02	AT	Rear	Estate RWD N42B18A/N46B18A		Propshaft	PS900116
	2001.07-2005.02	MT	Rear	Estate RWD N42B18A/N46B18A		Propshaft	PS901493
	2001.07-2005.02		Centre	Estate RWD N42B18A/N46B18A		Center Bearing Support	538653
	2001.07-2005.02		Centre	Estate RWD N42B18A/N46B18A		Center Bearing Support	538665
	2001.07-2005.02		Front	Estate RWD N42B18A/N46B18A	Inner diameter:50mm,510596 and 537625 different structure	Flexible Coupling	510596
	2001.07-2005.02		Front	Estate RWD N42B18A/N46B18A	Engine Code:N42 B18 A;MT;Inner diameter:38mm,Width:32mm	Flexible Coupling	510597
	2001.07-2005.02		Front	Estate RWD N42B18A/N46B18A	Inner diameter:38.5mm,Width:28mm	Flexible Coupling	510641
	2001.07-2005.02		Front	Estate RWD N42B18A/N46B18A	Inner diameter:50mm,537625 and 510596 different structure	Flexible Coupling	537625
	2001.07-2005.02		Front	Estate RWD N42B18A/N46B18A		Flexible Coupling Kit	510596S
	2001.07-2005.02		Front	Estate RWD N42B18A/N46B18A		Flexible Coupling Kit	510597S
	2001.07-2005.02		Front	Estate RWD N42B18A/N46B18A		Flexible Coupling Kit	510641S
318d							
1.7 (66 kw)	1994.08-1998.01		Centre	Saloon RWD M41D174T1	Installation size:160mm	Center Bearing Support	538661
	1994.08-1998.01		Centre	Saloon RWD M41D174T1	Installation size:124.6mm	Center Bearing Support	538665
	1994.08-1998.01		Centre	Saloon RWD M41D174T1	Installation size:130.6mm	Center Bearing Support	538677
	1994.08-1998.01		Front	Saloon RWD M41D174T1	Width:32mm	Flexible Coupling	510597
	1994.08-1998.01		Front	Saloon RWD M41D174T1	Width:28mm	Flexible Coupling	510641
	1994.08-1998.01		Front	Saloon RWD M41D174T1	MT	Flexible Coupling Kit	510597S
2.0 (85 kw)	2001.07-2003.02	MT	Rear	Saloon RWD M47D204D1		Propshaft	PS900121
	2001.07-2003.02		Centre	Saloon RWD M47D204D1	Height:45mm	Center Bearing Support	538653
	2001.07-2003.02		Centre	Saloon RWD M47D204D1	Height:46mm	Center Bearing Support	538661
	2001.07-2003.02		Centre	Saloon RWD M47D204D1	Height:23.5mm	Center Bearing Support	538665
	2001.07-2003.02		Front	Saloon RWD M47D204D1	510596 and 537625 different structure	Flexible Coupling	510596
	2001.07-2003.02		Front	Saloon RWD M47D204D1	537625 and 510596 different structure	Flexible Coupling	537625
	2001.07-2003.02		Front	Saloon RWD M47D204D1		Flexible Coupling Kit	510596S
	2003.03-2005.02	MT	Rear	Saloon RWD M47D204D4		Propshaft	PS900121
	2003.03-2005.02		Centre	Saloon RWD M47D204D4	Height:45mm	Center Bearing Support	538653
	2003.03-2005.02		Centre	Saloon RWD M47D204D4	Height:46mm	Center Bearing Support	538661
	2003.03-2005.02		Centre	Saloon RWD M47D204D4	Height:23.5mm	Center Bearing Support	538665
	2003.03-2005.02		Front	Saloon RWD M47D204D4	510596 and 537625 different structure	Flexible Coupling	510596
	2003.03-2005.02		Front	Saloon RWD M47D204D4	537625 and 510596 different structure	Flexible Coupling	537625
	2003.03-2005.02		Front	Saloon RWD M47D204D4		Flexible Coupling Kit	510596S
2.0 (90 kw)	2005.03-2007.08		Centre	Saloon RWD M47D204D4		Center Bearing Support	538672
	2005.03-2007.08		Front	Saloon RWD M47D204D4	510596 and 537625 different structure	Flexible Coupling	510596
	2005.03-2007.08		Front	Saloon RWD M47D204D4	537625 and 510596 different structure	Flexible Coupling	537625
	2005.03-2007.08		Rear	Saloon RWD M47D204D4		Flexible Coupling	533878
	2005.03-2007.08		Front	Saloon RWD M47D204D4		Flexible Coupling Kit	510596S
	2005.03-2007.08		Rear	Saloon RWD M47D204D4		Flexible Coupling Kit	538112S
2.0 (100 kw)	2007.09-2011.10	AT	Rear	Saloon RWD N47D20A/N47D20C		Propshaft	PS901638
	2007.09-2011.10		Front	Saloon RWD N47D20A/N47D20C		Flexible Coupling	510596
	2007.09-2011.10		Rear	Saloon RWD N47D20A/N47D20C		Flexible Coupling	533878
	2007.09-2011.10		Rear	Saloon RWD N47D20A/N47D20C		Flexible Coupling Kit	538112S
	2012.03-2018.10		Centre	Saloon RWD B47D20A/N47D20C		Center Bearing Support	538672
	2012.03-2018.10		Front	Saloon RWD B47D20A/N47D20C		Flexible Coupling	510596
	2012.03-2018.10		Front	Saloon RWD B47D20A/N47D20C		Flexible Coupling	537625
	2012.03-2018.10		Front	Saloon RWD B47D20A/N47D20C		Flexible Coupling Kit	510596S
	2012.03-2018.10		Front	Saloon RWD B47D20A/N47D20C		Flexible Coupling Kit	537625S
	2019.03-2020.03		Centre	Saloon RWD B47D20B		Center Bearing Support	538640
	2019.03-2020.03		Front	Saloon RWD B47D20B	Width:30mm	Flexible Coupling	510596
	2019.03-2020.03		Front	Saloon RWD B47D20B	Width:32mm	Flexible Coupling	533422
2.0 (105 kw)	2007.02-2011.10	AT	Rear	Saloon RWD N47D20A/N47D20C		Propshaft	PS901638
	2007.02-2011.10		Centre	Saloon RWD N47D20A/N47D20C		Center Bearing Support	538672
	2007.02-2011.10		Front	Saloon RWD N47D20A/N47D20C	510596 and 537625 different structure	Flexible Coupling	510596
	2007.02-2011.10		Front	Saloon RWD N47D20A/N47D20C	537625 and 510596 different structure	Flexible Coupling	537625

	YEAR	TRANSM.	FITTING POSITION	BODY STYLE & DRIVE TYPE & ENGINE	REMARKS	PRODUCT	GSP Ref.
BMW							
318d							
2.0 (105 kw)	2007.02-2011.10		Rear	Saloon RWD N47D20A/N47D20C		Flexible Coupling	533878
	2007.02-2011.10		Front	Saloon RWD N47D20A/N47D20C		Flexible Coupling Kit	510596S
	2007.02-2011.10		Rear	Saloon RWD N47D20A/N47D20C		Flexible Coupling Kit	538112S
	2012.03-2015.06		Centre	Saloon RWD N47D20C		Center Bearing Support	538672
	2012.03-2015.06		Front	Saloon RWD N47D20C		Flexible Coupling	510596
	2012.03-2015.06		Front	Saloon RWD N47D20C		Flexible Coupling	537625
	2012.03-2015.06		Front	Saloon RWD N47D20C		Flexible Coupling Kit	510596S
	2012.03-2015.06		Front	Saloon RWD N47D20C		Flexible Coupling Kit	537625S
2.0 (110 kw)	2015.07-2018.10		Centre	Saloon RWD B47D20A		Center Bearing Support	538672
	2015.07-2018.10		Front	Saloon RWD B47D20A		Flexible Coupling	510596
	2015.07-2018.10		Front	Saloon RWD B47D20A		Flexible Coupling	537625
	2015.07-2018.10		Front	Saloon RWD B47D20A		Flexible Coupling Kit	510596S
	2015.07-2018.10		Front	Saloon RWD B47D20A		Flexible Coupling Kit	537625S
	2019.03-2020.03		Centre	Saloon RWD B47D20B		Center Bearing Support	538640
	2019.03-2020.03		Front	Saloon RWD B47D20B	Width:30mm	Flexible Coupling	510596
	2019.03-2020.03		Front	Saloon RWD B47D20B	Width:32mm	Flexible Coupling	533422
318d Compact							
1.7 (66 kw)	1995.06-2000.08		Centre	Hatchback RWD M41D174T1	Installation size:124.6mm	Center Bearing Support	538665
	1995.06-2000.08		Centre	Hatchback RWD M41D174T1	Installation size:130.6mm	Center Bearing Support	538677
	1995.06-2000.08		Front	Hatchback RWD M41D174T1	Width:32mm	Flexible Coupling	510597
	1995.06-2000.08		Front	Hatchback RWD M41D174T1	Width:28mm	Flexible Coupling	510641
2.0 (85 kw)	2003.02-2005.02		Centre	Hatchback RWD M47D204D4	Height:46mm	Center Bearing Support	538661
	2003.02-2005.02		Centre	Hatchback RWD M47D204D4	Height:23.5mm	Center Bearing Support	538665
	2003.02-2005.02		Front	Hatchback RWD M47D204D4	510596 and 537625 different structure	Flexible Coupling	510596
	2003.02-2005.02		Front	Hatchback RWD M47D204D4	537625 and 510596 different structure	Flexible Coupling	537625
	2003.02-2005.02		Front	Hatchback RWD M47D204D4		Flexible Coupling Kit	510596S
318d Gran Turismo							
2.0 (100 kw)	2013.03-		Centre	Hatchback RWD B47D20A/N47D20C		Center Bearing Support	538672
	2013.03-		Front	Hatchback RWD B47D20A/N47D20C		Flexible Coupling	510596
	2013.03-		Front	Hatchback RWD B47D20A/N47D20C		Flexible Coupling	537625
	2013.03-		Front;Rear	Hatchback RWD B47D20A/N47D20C		Flexible Coupling	517955
	2013.03-		Front	Hatchback RWD B47D20A/N47D20C		Flexible Coupling Kit	510596S
	2013.03-		Front	Hatchback RWD B47D20A/N47D20C		Flexible Coupling Kit	537625S
2.0 (105 kw)	2013.03-2015.06		Front	Hatchback RWD N47D20C		Flexible Coupling	510596
	2013.03-2015.06		Front	Hatchback RWD N47D20C		Flexible Coupling	537625
	2013.03-2015.06		Front	Hatchback RWD N47D20C		Flexible Coupling Kit	510596S
	2013.03-2015.06		Front	Hatchback RWD N47D20C		Flexible Coupling Kit	537625S
2.0 (110 kw)	2016.06-		Centre	Hatchback RWD B47D20A		Center Bearing Support	538672
	2016.06-		Front	Hatchback RWD B47D20A		Flexible Coupling	510596
	2016.06-		Front	Hatchback RWD B47D20A		Flexible Coupling	537625
	2016.06-		Front	Hatchback RWD B47D20A		Flexible Coupling Kit	510596S
	2016.06-		Front	Hatchback RWD B47D20A		Flexible Coupling Kit	537625S
318d Touring							
1.7 (66 kw)	1995.03-1999.04		Centre	Estate RWD M41D174T1	Installation size:160mm	Center Bearing Support	538661
	1995.03-1999.04		Centre	Estate RWD M41D174T1	Installation size:130.6mm	Center Bearing Support	538677
	1995.03-1999.04		Front	Estate RWD M41D174T1	Inner diameter:50mm	Flexible Coupling	510596
	1995.03-1999.04		Front	Estate RWD M41D174T1	Width:32mm	Flexible Coupling	510597
	1995.03-1999.04		Front	Estate RWD M41D174T1	Inner diameter:38.5mm,Width:28mm	Flexible Coupling	510641
2.0 (85 kw)	2001.07-2003.02		Centre	Estate RWD M47D204D1	Height:45mm	Center Bearing Support	538653
	2001.07-2003.02		Centre	Estate RWD M47D204D1	Height:46mm	Center Bearing Support	538661
	2001.07-2003.02		Centre	Estate RWD M47D204D1	Height:23.5mm	Center Bearing Support	538665
	2001.07-2003.02		Front	Estate RWD M47D204D1	510596 and 537625 different structure	Flexible Coupling	510596
	2001.07-2003.02		Front	Estate RWD M47D204D1	537625 and 510596 different structure	Flexible Coupling	537625
	2001.07-2003.02		Front	Estate RWD M47D204D1		Flexible Coupling Kit	510596S
	2003.03-2005.02		Centre	Estate RWD M47D204D4		Center Bearing Support	538653
	2003.03-2005.02		Centre	Estate RWD M47D204D4		Center Bearing Support	538661
	2003.03-2005.02		Front	Estate RWD M47D204D4	510596 and 537625 different structure	Flexible Coupling	510596
	2003.03-2005.02		Front	Estate RWD M47D204D4	537625 and 510596 different structure	Flexible Coupling	537625
	2003.03-2005.02		Front	Estate RWD M47D204D4		Flexible Coupling Kit	510596S
2.0 (90 kw)	2005.09-2007.08		Centre	Estate RWD M47D204D4		Center Bearing Support	538672
	2005.09-2007.08		Front	Estate RWD M47D204D4	510596 and 537625 different structure	Flexible Coupling	510596
	2005.09-2007.08		Front	Estate RWD M47D204D4	537625 and 510596 different structure	Flexible Coupling	537625
	2005.09-2007.08		Rear	Estate RWD M47D204D4		Flexible Coupling	533878
	2005.09-2007.08		Front	Estate RWD M47D204D4		Flexible Coupling Kit	510596S

	YEAR	TRANSM.	FITTING POSITION	BODY STYLE & DRIVE TYPE & ENGINE	REMARKS	PRODUCT	GSP Ref.
BMW							
318d Touring							
2.0 (90 kw)	2005.09-2007.08		Rear	Estate RWD M47D204D4		Flexible Coupling Kit	538112S
2.0 (100 kw)	2007.09-2012.06		Centre	Estate RWD N47D20A/N47D20C		Center Bearing Support	538672
	2007.09-2012.06		Front	Estate RWD N47D20A/N47D20C		Flexible Coupling	510596
	2007.09-2012.06		Rear	Estate RWD N47D20A/N47D20C		Flexible Coupling	533878
	2007.09-2012.06		Rear	Estate RWD N47D20A/N47D20C		Flexible Coupling Kit	538112S
	2012.06-2019.06		Centre	Estate RWD B47D20A/N47D20C		Center Bearing Support	538672
	2012.06-2019.06		Front	Estate RWD B47D20A/N47D20C		Flexible Coupling	510596
	2012.06-2019.06		Front	Estate RWD B47D20A/N47D20C		Flexible Coupling	537625
	2012.06-2019.06		Front	Estate RWD B47D20A/N47D20C		Flexible Coupling Kit	510596S
	2012.06-2019.06		Front	Estate RWD B47D20A/N47D20C		Flexible Coupling Kit	537625S
	2019.11-2020.07		Centre	Estate RWD B47D20B		Center Bearing Support	538640
	2019.11-2020.07		Front	Estate RWD B47D20B		Flexible Coupling	510596
2.0 (105 kw)	2007.09-2012.06		Centre	Estate RWD N47D20A/N47D20C		Center Bearing Support	538672
	2007.09-2012.06		Front	Estate RWD N47D20A/N47D20C	510596 and 537625 different structure	Flexible Coupling	510596
	2007.09-2012.06		Front	Estate RWD N47D20A/N47D20C	537625 and 510596 different structure	Flexible Coupling	537625
	2007.09-2012.06		Rear	Estate RWD N47D20A/N47D20C		Flexible Coupling	533878
	2007.09-2012.06		Front	Estate RWD N47D20A/N47D20C		Flexible Coupling Kit	510596S
	2007.09-2012.06		Rear	Estate RWD N47D20A/N47D20C		Flexible Coupling Kit	538112S
	2012.11-2015.06		Centre	Estate RWD N47D20C		Center Bearing Support	538672
	2012.11-2015.06		Front	Estate RWD N47D20C		Flexible Coupling	510596
	2012.11-2015.06		Front	Estate RWD N47D20C		Flexible Coupling	537625
	2012.11-2015.06		Front	Estate RWD N47D20C		Flexible Coupling Kit	510596S
	2012.11-2015.06		Front	Estate RWD N47D20C		Flexible Coupling Kit	537625S
2.0 (110 kw)	2015.07-2019.06		Centre	Estate RWD B47D20A		Center Bearing Support	538672
	2015.07-2019.06		Front	Estate RWD B47D20A		Flexible Coupling	510596
	2015.07-2019.06		Front	Estate RWD B47D20A		Flexible Coupling	537625
	2015.07-2019.06		Front	Estate RWD B47D20A		Flexible Coupling Kit	510596S
	2015.07-2019.06		Front	Estate RWD B47D20A		Flexible Coupling Kit	537625S
	2019.11-2020.07		Centre	Estate RWD B47D20B		Center Bearing Support	538640
	2019.11-2020.07		Front	Estate RWD B47D20B		Flexible Coupling	510596
318d xDrive							
2.0 (105 kw)	2013.07-2015.06	AT/MT	Front	Saloon 4WD N47D20C	Date from:2014.01	Propshaft	PS900112
	2013.07-2015.06	MT	Rear	Saloon 4WD N47D20C		Propshaft	PS901433
	2013.07-2015.06		Centre	Saloon 4WD N47D20C		Center Bearing Support	538672
	2013.07-2015.06		Front	Saloon 4WD N47D20C		Flexible Coupling	537625
	2013.07-2015.06		Front;Rear	Saloon 4WD N47D20C		Flexible Coupling	517955
	2013.07-2015.06		Front	Saloon 4WD N47D20C		Flexible Coupling Kit	537625S
	2013.07-2015.06		Front;Rear	Saloon 4WD N47D20C		Flexible Coupling Kit	517955S
2.0 (110 kw)	2015.07-2018.02		Centre	Saloon 4WD B47D20A		Center Bearing Support	538672
	2015.07-2018.02		Front	Saloon 4WD B47D20A		Flexible Coupling	510596
	2015.07-2018.02		Front	Saloon 4WD B47D20A		Flexible Coupling	537625
	2015.07-2018.02		Front;Rear	Saloon 4WD B47D20A		Flexible Coupling	517955
	2015.07-2018.02		Front	Saloon 4WD B47D20A	510596S and 537625S different structure	Flexible Coupling Kit	510596S
	2015.07-2018.02		Front	Saloon 4WD B47D20A	537625S and 510596S different structure	Flexible Coupling Kit	537625S
318d xDrive Touring							
2.0 (105 kw)	2013.07-2015.06	MT	Rear	Estate 4WD N47D20C		Propshaft	PS901433
	2013.07-2015.06		Centre	Estate 4WD N47D20C		Center Bearing Support	538672
	2013.07-2015.06		Front	Estate 4WD N47D20C		Flexible Coupling	537625
	2013.07-2015.06		Front;Rear	Estate 4WD N47D20C		Flexible Coupling	517955
	2013.07-2015.06		Front	Estate 4WD N47D20C		Flexible Coupling Kit	537625S
	2013.07-2015.06		Front;Rear	Estate 4WD N47D20C		Flexible Coupling Kit	517955S
2.0 (110 kw)	2015.07-2018.02		Centre	Estate 4WD B47D20A		Center Bearing Support	538672
	2015.07-2018.02		Front	Estate 4WD B47D20A		Flexible Coupling	510596
	2015.07-2018.02		Front	Estate 4WD B47D20A		Flexible Coupling	537625
	2015.07-2018.02		Front;Rear	Estate 4WD B47D20A		Flexible Coupling	517955
	2015.07-2018.02		Front	Estate 4WD B47D20A	510596S and 537625S different structure	Flexible Coupling Kit	510596S
	2015.07-2018.02		Front	Estate 4WD B47D20A	537625S and 510596S different structure	Flexible Coupling Kit	537625S
318i							
1.5 (100 kw)	2015.07-2018.10		Centre	Saloon RWD B38B15A		Center Bearing Support	538672
	2015.07-2018.10		Front	Saloon RWD B38B15A	AT,Inner diameter:50mm,510596 and 537625 different structure	Flexible Coupling	510596
	2015.07-2018.10		Front	Saloon RWD B38B15A	MT,Inner diameter:38.5mm	Flexible Coupling	510597
	2015.07-2018.10		Front	Saloon RWD B38B15A	AT,Inner diameter:50mm,510596 and 537625 different structure	Flexible Coupling	537625
	2015.07-2018.10		Front	Saloon RWD B38B15A	AT	Flexible Coupling Kit	510596S
	2015.07-2018.10		Front	Saloon RWD B38B15A	MT	Flexible Coupling Kit	510597S

	YEAR	TRANSM.	FITTING POSITION	BODY STYLE & DRIVE TYPE & ENGINE	REMARKS	PRODUCT	GSP Ref.
BMW							
318i							
1.8 (85 kw)	1993.09-1998.11		Centre	Saloon RWD M43B184E2	Installation size:160mm	Center Bearing Support	538661
	1993.09-1998.11		Centre	Saloon RWD M43B184E2	Installation size:130.6mm	Center Bearing Support	538677
	1993.09-1998.11		Front	Saloon RWD M43B184E2		Flexible Coupling	510597
	1993.09-1998.11		Front	Saloon RWD M43B184E2		Flexible Coupling	510641
	1993.09-1998.11		Front	Saloon RWD M43B184E2	MT	Flexible Coupling Kit	510597S
	1993.09-1998.11		Front	Saloon RWD M43B184E2	AT	Flexible Coupling Kit	510641S
1.8 (103 kw)	1992.02-1995.12		Front	Saloon RWD M42B18(184S1)		Flexible Coupling	510597
	1993.09-1995.12		Centre	Saloon RWD M42B184S1	Installation size:160mm	Center Bearing Support	538661
	1993.09-1995.12		Centre	Saloon RWD M42B184S1	Installation size:130.6mm	Center Bearing Support	538677
	1993.09-1995.12		Front	Saloon RWD M42B184S1		Flexible Coupling	510597
	1993.09-1995.12		Front	Saloon RWD M42B184S1		Flexible Coupling	510641
	1993.09-1995.12		Front	Saloon RWD M42B184S1		Flexible Coupling Kit	510597S
	1993.09-1995.12		Front	Saloon RWD M42B184S1		Flexible Coupling Kit	510641S
1.9 (87 kw)	1997.12-2001.09	MT	Rear	Saloon RWD M43B194E1		Propshaft	PS901493
	1997.12-2001.09		Centre	Saloon RWD M43B194E1	Height:45mm	Center Bearing Support	538653
	1997.12-2001.09		Centre	Saloon RWD M43B194E1	Height:46mm	Center Bearing Support	538661
	1997.12-2001.09		Centre	Saloon RWD M43B194E1	Height:23.5mm	Center Bearing Support	538665
	1997.12-2001.09		Front	Saloon RWD M43B194E1		Flexible Coupling	510597
	1997.12-2001.09		Front	Saloon RWD M43B194E1		Flexible Coupling Kit	510597S
1.9 (103 kw)	1996.01-1998.05		Centre	Saloon RWD M44B194S1	Installation size:160mm	Center Bearing Support	538661
	1996.01-1998.05		Centre	Saloon RWD M44B194S1	Installation size:130.6mm	Center Bearing Support	538677
	1996.01-1998.05		Front	Saloon RWD M44B194S1		Flexible Coupling	510597
	1996.01-1998.05		Front	Saloon RWD M44B194S1		Flexible Coupling	510641
	1996.01-1998.05		Front	Saloon RWD M44B194S1	MT	Flexible Coupling Kit	510597S
	1996.01-1998.05		Front	Saloon RWD M44B194S1	AT	Flexible Coupling Kit	510641S
2.0 (95 kw)	2005.03-2007.08	AT	Rear	Saloon RWD N46B20B		Propshaft	PS900125
	2005.03-2007.08		Centre	Saloon RWD N46B20B		Center Bearing Support	538672
	2005.03-2007.08		Front	Saloon RWD N46B20B		Flexible Coupling	510596
	2005.03-2007.08		Front	Saloon RWD N46B20B		Flexible Coupling	510641
	2005.03-2007.08		Front	Saloon RWD N46B20B		Flexible Coupling Kit	510596S
	2005.03-2007.08		Front	Saloon RWD N46B20B		Flexible Coupling Kit	510641S
2.0 (100 kw)	2001.09-2005.02	AT	Rear	Saloon RWD N42B20A		Propshaft	PS900116
	2001.09-2005.02	MT	Rear	Saloon RWD N42B20A		Propshaft	PS901493
	2001.09-2005.02		Front	Saloon RWD N42B20A		Flexible Coupling	510596
	2007.09-2011.10		Centre	Saloon RWD N46B20B		Center Bearing Support	538672
	2007.09-2011.10		Front	Saloon RWD N46B20B	AT	Flexible Coupling	510596
	2007.09-2011.10		Front	Saloon RWD N46B20B	MT	Flexible Coupling	510641
	2007.09-2011.10		Front	Saloon RWD N46B20B		Flexible Coupling Kit	510641S
2.0 (105 kw)	2001.09-2005.02	AT	Rear	Saloon RWD N42B20A/N46B20A/N46B20C		Propshaft	PS900116
	2001.09-2005.02	MT	Rear	Saloon RWD N42B20A/N46B20A/N46B20C		Propshaft	PS901493
	2001.09-2005.02		Centre	Saloon RWD N42B20A/N46B20A/N46B20C	Height:45mm	Center Bearing Support	538653
	2001.09-2005.02		Centre	Saloon RWD N42B20A/N46B20A/N46B20C	Height:46mm	Center Bearing Support	538661
	2001.09-2005.02		Centre	Saloon RWD N42B20A/N46B20A/N46B20C	Height:23.5mm	Center Bearing Support	538665
	2001.09-2005.02		Front	Saloon RWD N42B20A/N46B20A/N46B20C	Inner diameter:50mm,510596 and 537625 different structure	Flexible Coupling	510596
	2001.09-2005.02		Front	Saloon RWD N42B20A/N46B20A/N46B20C	Engine Code:N42 B20 A;MT;Inner diameter:38mm,Width:32mm	Flexible Coupling	510597
	2001.09-2005.02		Front	Saloon RWD N42B20A/N46B20A/N46B20C	Inner diameter:38.5mm,Width:28mm	Flexible Coupling	510641
	2001.09-2005.02		Front	Saloon RWD N42B20A/N46B20A/N46B20C	Inner diameter:50mm,537625 and 510596 different structure	Flexible Coupling	537625
	2001.09-2005.02		Front	Saloon RWD N42B20A/N46B20A/N46B20C	AT,Engine Code:N46 B20 A	Flexible Coupling Kit	510596S
	2001.09-2005.02		Front	Saloon RWD N42B20A/N46B20A/N46B20C	MT,Engine Code:N42 B20 A	Flexible Coupling Kit	510597S
	2001.09-2005.02		Front	Saloon RWD N42B20A/N46B20A/N46B20C	MT,Engine Code:N46 B20 A	Flexible Coupling Kit	510641S
	2007.09-2011.10	AT	Rear	Saloon RWD N43B20A	Model year to:2008	Propshaft	PS900125
	2007.09-2011.10		Centre	Saloon RWD N43B20A		Center Bearing Support	538672
	2007.09-2011.10		Front	Saloon RWD N43B20A	Inner diameter:50mm,510596 and 537625 different structure	Flexible Coupling	510596
	2007.09-2011.10		Front	Saloon RWD N43B20A	Inner diameter:38.5mm	Flexible Coupling	510641
	2007.09-2011.10		Front	Saloon RWD N43B20A	Inner diameter:50mm,537625 and 510596 different structure	Flexible Coupling	537625
	2007.09-2011.10		Front	Saloon RWD N43B20A		Flexible Coupling Kit	510596S
	2007.09-2011.10		Front	Saloon RWD N43B20A		Flexible Coupling Kit	510641S
318i Cabrio							
1.8 (85 kw)	1994.03-1999.11		Centre	Cabriolet RWD M43B184E2	Installation size:160mm	Center Bearing Support	538661
	1994.03-1999.11		Centre	Cabriolet RWD M43B184E2	Installation size:130.6mm	Center Bearing Support	538677
	1994.03-1999.11		Front	Cabriolet RWD M43B184E2		Flexible Coupling	510597
	1994.03-1999.11		Front	Cabriolet RWD M43B184E2		Flexible Coupling	510641
	1994.03-1999.11		Front	Cabriolet RWD M43B184E2	MT	Flexible Coupling Kit	510597S
	1994.03-1999.11		Front	Cabriolet RWD M43B184E2	AT	Flexible Coupling Kit	510641S

	YEAR	TRANSM.	FITTING POSITION	BODY STYLE & DRIVE TYPE & ENGINE	REMARKS	PRODUCT	GSP Ref.
BMW							
318i Cabrio							
2.0 (100 kw)	2001.09-2006.12	AT	Rear	Cabriolet RWD N42B20A/N46B20A		Propshaft	PS900116
	2001.09-2006.12	MT	Rear	Cabriolet RWD N42B20A/N46B20A		Propshaft	PS901493
	2001.09-2006.12		Front	Cabriolet RWD N42B20A/N46B20A		Flexible Coupling	510596
	2001.09-2006.12		Front	Cabriolet RWD N42B20A/N46B20A	Engine Code:N42 B20 A;MT	Flexible Coupling	510597
	2001.09-2006.12		Front	Cabriolet RWD N42B20A/N46B20A	Engine Code:N46 B20 A;MT	Flexible Coupling	510641
	2001.09-2006.12		Front	Cabriolet RWD N42B20A/N46B20A		Flexible Coupling Kit	510597S
	2001.09-2006.12		Front	Cabriolet RWD N42B20A/N46B20A		Flexible Coupling Kit	510641S
2.0 (105 kw)	2001.09-2006.12	AT	Rear	Cabriolet RWD N42B20A/N46B20A		Propshaft	PS900116
	2001.09-2006.12	MT	Rear	Cabriolet RWD N42B20A/N46B20A		Propshaft	PS901493
	2001.09-2006.12		Centre	Cabriolet RWD N42B20A/N46B20A		Center Bearing Support	538653
	2001.09-2006.12		Centre	Cabriolet RWD N42B20A/N46B20A		Center Bearing Support	538665
	2001.09-2006.12		Front	Cabriolet RWD N42B20A/N46B20A	Inner diameter:50mm,510596 and 537625 different structure	Flexible Coupling	510596
	2001.09-2006.12		Front	Cabriolet RWD N42B20A/N46B20A	Engine Code:N42 B20 A;MT;Inner diameter:38mm,Width:32mm	Flexible Coupling	510597
	2001.09-2006.12		Front	Cabriolet RWD N42B20A/N46B20A	Inner diameter:38.5mm,Width:28mm	Flexible Coupling	510641
	2001.09-2006.12		Front	Cabriolet RWD N42B20A/N46B20A	Inner diameter:50mm,537625 and 510596 different structure	Flexible Coupling	537625
	2001.09-2006.12		Front	Cabriolet RWD N42B20A/N46B20A		Flexible Coupling Kit	510596S
	2001.09-2006.12		Front	Cabriolet RWD N42B20A/N46B20A		Flexible Coupling Kit	510597S
	2001.09-2006.12		Front	Cabriolet RWD N42B20A/N46B20A		Flexible Coupling Kit	510641S
	2010.03-2013.12		Centre	Cabriolet RWD N43B20A		Center Bearing Support	538672
	2010.03-2013.12		Front	Cabriolet RWD N43B20A		Flexible Coupling	510641
	2010.03-2013.12		Front	Cabriolet RWD N43B20A		Flexible Coupling Kit	510641S
2.0 (110 kw)	2004.03-2006.08	AT	Rear	Cabriolet RWD N46B20A/N46B20C		Propshaft	PS900116
	2004.03-2006.08	MT	Rear	Cabriolet RWD N46B20A/N46B20C		Propshaft	PS901493
	2004.03-2006.08		Centre	Cabriolet RWD N46B20A/N46B20C		Center Bearing Support	538665
	2004.03-2006.08		Front	Cabriolet RWD N46B20A/N46B20C	Inner diameter:50mm,510596 and 537625 different structure	Flexible Coupling	510596
	2004.03-2006.08		Front	Cabriolet RWD N46B20A/N46B20C	Inner diameter:38.5mm	Flexible Coupling	510641
	2004.03-2006.08		Front	Cabriolet RWD N46B20A/N46B20C	Inner diameter:50mm,537625 and 510596 different structure	Flexible Coupling	537625
	2004.03-2006.08		Front	Cabriolet RWD N46B20A/N46B20C		Flexible Coupling Kit	510596S
	2004.03-2006.08		Front	Cabriolet RWD N46B20A/N46B20C		Flexible Coupling Kit	510641S
318i Compact							
1.8 (103 kw)	1994.09-1995.12		Centre	Hatchback RWD M42B184S1	Installation size:160mm	Center Bearing Support	538661
	1994.09-1995.12		Centre	Hatchback RWD M42B184S1	Installation size:130.6mm	Center Bearing Support	538677
	1994.09-1995.12		Front	Hatchback RWD M42B184S1		Flexible Coupling	510597
	1994.09-1995.12		Front	Hatchback RWD M42B184S1		Flexible Coupling	510641
	1994.09-1995.12		Front	Hatchback RWD M42B184S1		Flexible Coupling Kit	510597S
	1994.09-1995.12		Front	Hatchback RWD M42B184S1		Flexible Coupling Kit	510641S
1.9 (103 kw)	1996.01-1999.01		Centre	Hatchback RWD M44B194S1	Installation size:160mm	Center Bearing Support	538661
	1996.01-1999.01		Centre	Hatchback RWD M44B194S1	Installation size:130.6mm	Center Bearing Support	538677
	1996.01-1999.01		Front	Hatchback RWD M44B194S1		Flexible Coupling	510597
	1996.01-1999.01		Front	Hatchback RWD M44B194S1		Flexible Coupling	510641
	1996.01-1999.01		Front	Hatchback RWD M44B194S1		Flexible Coupling Kit	510597S
	1996.01-1999.01		Front	Hatchback RWD M44B194S1		Flexible Coupling Kit	510641S
2.0 (100 kw)	2001.03-2004.12	AT	Rear	Hatchback RWD N42B20A/N46B20A		Propshaft	PS900116
	2001.03-2004.12	MT	Rear	Hatchback RWD N42B20A/N46B20A		Propshaft	PS901493
	2001.03-2004.12		Front	Hatchback RWD N42B20A/N46B20A	AT	Flexible Coupling	510596
	2001.03-2004.12		Front	Hatchback RWD N42B20A/N46B20A	MT	Flexible Coupling	510641
	2001.03-2004.12		Front	Hatchback RWD N42B20A/N46B20A		Flexible Coupling Kit	510641S
2.0 (105 kw)	2001.09-2005.02	AT	Rear	Hatchback RWD N42B20A/N46B20A		Propshaft	PS900116
	2001.09-2005.02	MT	Rear	Hatchback RWD N42B20A/N46B20A		Propshaft	PS901493
	2001.09-2005.02		Centre	Hatchback RWD N42B20A/N46B20A		Center Bearing Support	538653
	2001.09-2005.02		Centre	Hatchback RWD N42B20A/N46B20A		Center Bearing Support	538665
	2001.09-2005.02		Front	Hatchback RWD N42B20A/N46B20A	Inner diameter:50mm,510596 and 537625 different structure	Flexible Coupling	510596
	2001.09-2005.02		Front	Hatchback RWD N42B20A/N46B20A	Engine Code:N42 B20 A;MT;Inner diameter:38mm,Width:32mm	Flexible Coupling	510597
	2001.09-2005.02		Front	Hatchback RWD N42B20A/N46B20A	Inner diameter:38.5mm,Width:28mm	Flexible Coupling	510641
	2001.09-2005.02		Front	Hatchback RWD N42B20A/N46B20A	Inner diameter:50mm,537625 and 510596 different structure	Flexible Coupling	537625
	2001.09-2005.02		Front	Hatchback RWD N42B20A/N46B20A		Flexible Coupling Kit	510596S
	2001.09-2005.02		Front	Hatchback RWD N42B20A/N46B20A		Flexible Coupling Kit	510597S
	2001.09-2005.02		Front	Hatchback RWD N42B20A/N46B20A		Flexible Coupling Kit	510641S
318i Coupe							
1.8 (103 kw)	1992.01-1995.12		Centre	Coupe RWD M42B184S1	Installation size:160mm	Center Bearing Support	538661
	1992.01-1995.12		Centre	Coupe RWD M42B184S1	Installation size:130.6mm	Center Bearing Support	538677
	1992.01-1995.12		Front	Coupe RWD M42B184S1		Flexible Coupling	510597
	1992.01-1995.12		Front	Coupe RWD M42B184S1		Flexible Coupling	510641
	1992.01-1995.12		Front	Coupe RWD M42B184S1		Flexible Coupling Kit	510597S

	YEAR	TRANSM.	FITTING POSITION	BODY STYLE & DRIVE TYPE & ENGINE	REMARKS	PRODUCT	GSP Ref.
BMW							
318i Coupe							
1.8 (103 kw)	1992.01-1995.12		Front	Coupe RWD M42B184S1		Flexible Coupling Kit	510641S
1.9 (85 kw)	1999.12-2001.08	MT	Rear	Coupe RWD M43B194E1		Propshaft	PS901493
	1999.12-2001.08		Front	Coupe RWD M43B194E1		Flexible Coupling	510597
1.9 (87 kw)	1999.12-2001.08	MT	Rear	Coupe RWD M43B194E1		Propshaft	PS901493
	1999.12-2001.08		Centre	Coupe RWD M43B194E1	Height:45mm	Center Bearing Support	538653
	1999.12-2001.08		Centre	Coupe RWD M43B194E1	Height:46mm	Center Bearing Support	538661
	1999.12-2001.08		Centre	Coupe RWD M43B194E1	Height:23.5mm	Center Bearing Support	538665
	1999.12-2001.08		Front	Coupe RWD M43B194E1	Inner diameter:50mm	Flexible Coupling	510596
	1999.12-2001.08		Front	Coupe RWD M43B194E1	Inner diameter:38mm	Flexible Coupling	510597
	1999.12-2001.08		Front	Coupe RWD M43B194E1		Flexible Coupling Kit	510597S
1.9 (103 kw)	1995.04-1999.12		Centre	Coupe RWD M44B194S1	Installation size:160mm	Center Bearing Support	538661
	1995.04-1999.12		Centre	Coupe RWD M44B194S1	Installation size:130.6mm	Center Bearing Support	538677
	1995.04-1999.12		Front	Coupe RWD M44B194S1		Flexible Coupling	510597
	1995.04-1999.12		Front	Coupe RWD M44B194S1		Flexible Coupling	510641
	1995.04-1999.12		Front	Coupe RWD M44B194S1		Flexible Coupling Kit	510597S
	1995.04-1999.12		Front	Coupe RWD M44B194S1		Flexible Coupling Kit	510641S
	2000.01-2006.07	MT	Rear	Coupe RWD		Propshaft	PS901493
2.0 (100 kw)	2003.01-2004.12	AT	Rear	Coupe RWD N42B20A		Propshaft	PS900116
	2003.01-2004.12	MT	Rear	Coupe RWD N42B20A		Propshaft	PS901493
	2003.01-2004.12		Front	Coupe RWD N42B20A	AT	Flexible Coupling	510596
	2003.01-2004.12		Front	Coupe RWD N42B20A	MT	Flexible Coupling	510641
	2003.01-2004.12		Front	Coupe RWD N42B20A		Flexible Coupling Kit	510641S
2.0 (105 kw)	2001.09-2004.02	AT	Rear	Coupe RWD N42B20A		Propshaft	PS900116
	2001.09-2004.02	MT	Rear	Coupe RWD N42B20A		Propshaft	PS901493
	2001.09-2004.02		Centre	Coupe RWD N42B20A	Height:45mm	Center Bearing Support	538653
	2001.09-2004.02		Centre	Coupe RWD N42B20A	Height:46mm	Center Bearing Support	538661
	2001.09-2004.02		Centre	Coupe RWD N42B20A	Height:23.5mm	Center Bearing Support	538665
	2001.09-2004.02		Front	Coupe RWD N42B20A	Inner diameter:50mm,510596 and 537625 different structure	Flexible Coupling	510596
	2001.09-2004.02		Front	Coupe RWD N42B20A	Inner diameter:38mm	Flexible Coupling	510597
	2001.09-2004.02		Front	Coupe RWD N42B20A	Inner diameter:50mm,537625 and 510596 different structure	Flexible Coupling	537625
	2001.09-2004.02		Front	Coupe RWD N42B20A		Flexible Coupling Kit	510596S
	2001.09-2004.02		Front	Coupe RWD N42B20A		Flexible Coupling Kit	510597S
	2010.03-2013.12		Centre	Coupe RWD N43B20A		Center Bearing Support	538672
	2010.03-2013.12		Front	Coupe RWD N43B20A		Flexible Coupling	510641
	2010.03-2013.12		Front	Coupe RWD N43B20A		Flexible Coupling Kit	510641S
2.0 (110 kw)	2004.03-2006.05	MT	Rear	Coupe RWD N46B20A/N46B20C		Propshaft	PS901493
	2004.03-2006.05		Centre	Coupe RWD N46B20A/N46B20C		Center Bearing Support	538665
	2004.03-2006.05		Front	Coupe RWD N46B20A/N46B20C		Flexible Coupling	510596
	2004.03-2006.05		Front	Coupe RWD N46B20A/N46B20C		Flexible Coupling	510641
	2004.03-2006.05		Front	Coupe RWD N46B20A/N46B20C		Flexible Coupling Kit	510641S
318i Touring							
1.5 (100 kw)	2015.07-2019.06		Centre	Estate RWD B38B15A		Center Bearing Support	538672
	2015.07-2019.06		Front	Estate RWD B38B15A	AT,Inner diameter:50mm,510596 and 537625 different structure	Flexible Coupling	510596
	2015.07-2019.06		Front	Estate RWD B38B15A	MT,Inner diameter:38.5mm	Flexible Coupling	510597
	2015.07-2019.06		Front	Estate RWD B38B15A	AT,Inner diameter:50mm,510596 and 537625 different structure	Flexible Coupling	537625
	2015.07-2019.06		Front	Estate RWD B38B15A	Inner diameter:50mm,510596S and 537625S different structure	Flexible Coupling Kit	510596S
	2015.07-2019.06		Front	Estate RWD B38B15A	Inner diameter:38.5mm	Flexible Coupling Kit	510597S
	2015.07-2019.06		Front	Estate RWD B38B15A	Inner diameter:50mm,537625S and 510596S different structure	Flexible Coupling Kit	537625S
1.8 (85 kw)	1995.09-1999.04		Centre	Estate RWD M43B184E2	Installation size:160mm	Center Bearing Support	538661
	1995.09-1999.04		Centre	Estate RWD M43B184E2	Installation size:130.6mm	Center Bearing Support	538677
	1995.09-1999.04		Front	Estate RWD M43B184E2		Flexible Coupling	510597
	1995.09-1999.04		Front	Estate RWD M43B184E2		Flexible Coupling	510641
	1995.09-1999.04		Front	Estate RWD M43B184E2		Flexible Coupling Kit	510641S
1.9 (85 kw)	1999.10-2001.09	MT	Rear	Estate RWD M43B194E1		Propshaft	PS901493
	1999.10-2001.09		Centre	Estate RWD M43B194E1		Center Bearing Support	538661
	1999.10-2001.09		Front	Estate RWD M43B194E1		Flexible Coupling	510597
1.9 (87 kw)	1999.08-2001.06	MT	Rear	Estate RWD M43B194E1		Propshaft	PS901493
	1999.08-2001.06		Centre	Estate RWD M43B194E1	Height:45mm	Center Bearing Support	538653
	1999.08-2001.06		Centre	Estate RWD M43B194E1	Height:46mm	Center Bearing Support	538661
	1999.08-2001.06		Centre	Estate RWD M43B194E1	Height:23.5mm	Center Bearing Support	538665
	1999.08-2001.06		Front	Estate RWD M43B194E1	Inner diameter:50mm	Flexible Coupling	510596
	1999.08-2001.06		Front	Estate RWD M43B194E1	Inner diameter:38mm	Flexible Coupling	510597
	1999.08-2001.06		Front	Estate RWD M43B194E1		Flexible Coupling Kit	510597S

	YEAR	TRANSM.	FITTING POSITION	BODY STYLE & DRIVE TYPE & ENGINE	REMARKS	PRODUCT	GSP Ref.
BMW							
318i Touring							
2.0 (95 kw)	2006.01-2007.08	AT	Rear	Estate RWD N46B20B		Propshaft	PS900125
	2006.01-2007.08		Centre	Estate RWD N46B20B		Center Bearing Support	538672
	2006.01-2007.08		Front	Estate RWD N46B20B		Flexible Coupling	510596
	2006.01-2007.08		Front	Estate RWD N46B20B		Flexible Coupling	510641
	2006.01-2007.08		Front	Estate RWD N46B20B		Flexible Coupling Kit	510596S
	2006.01-2007.08		Front	Estate RWD N46B20B		Flexible Coupling Kit	510641S
2.0 (100 kw)	2007.09-2012.06	AT	Rear	Estate RWD N43B20A/N46B20B	Model year to:2008	Propshaft	PS900125
	2007.09-2012.06		Centre	Estate RWD N43B20A/N46B20B		Center Bearing Support	538672
	2007.09-2012.06		Front	Estate RWD N43B20A/N46B20B		Flexible Coupling	510641
	2007.09-2012.06		Front	Estate RWD N43B20A/N46B20B		Flexible Coupling Kit	510641S
2.0 (105 kw)	2001.09-2005.07	AT	Rear	Estate RWD N42B20A/N46B20A/N46B20C		Propshaft	PS900116
	2001.09-2005.07	MT	Rear	Estate RWD N42B20A/N46B20A/N46B20C		Propshaft	PS901493
	2001.09-2005.07		Centre	Estate RWD N42B20A/N46B20A/N46B20C	Height:45mm	Center Bearing Support	538653
	2001.09-2005.07		Centre	Estate RWD N42B20A/N46B20A/N46B20C	Height:46mm	Center Bearing Support	538661
	2001.09-2005.07		Centre	Estate RWD N42B20A/N46B20A/N46B20C	Height:23.5mm	Center Bearing Support	538665
	2001.09-2005.07		Front	Estate RWD N42B20A/N46B20A/N46B20C	Inner diameter:50mm,510596 and 537625 different structure	Flexible Coupling	510596
	2001.09-2005.07		Front	Estate RWD N42B20A/N46B20A/N46B20C	Engine Code:N42 B20 A;MT;Inner diameter:38mm,Width:32mm	Flexible Coupling	510597
	2001.09-2005.07		Front	Estate RWD N42B20A/N46B20A/N46B20C	Inner diameter:38.5mm,Width:28mm	Flexible Coupling	510641
	2001.09-2005.07		Front	Estate RWD N42B20A/N46B20A/N46B20C	Inner diameter:50mm,537625 and 510596 different structure	Flexible Coupling	537625
	2001.09-2005.07		Front	Estate RWD N42B20A/N46B20A/N46B20C		Flexible Coupling Kit	510596S
	2001.09-2005.07		Front	Estate RWD N42B20A/N46B20A/N46B20C		Flexible Coupling Kit	510597S
	2001.09-2005.07		Front	Estate RWD N42B20A/N46B20A/N46B20C		Flexible Coupling Kit	510641S
	2007.06-2012.12	AT	Rear	Estate RWD N43B20A	Model year to:2008	Propshaft	PS900125
	2007.06-2012.12		Centre	Estate RWD N43B20A		Center Bearing Support	538672
	2007.06-2012.12		Front	Estate RWD N43B20A	Inner diameter:50mm,510596 and 537625 different structure	Flexible Coupling	510596
	2007.06-2012.12		Front	Estate RWD N43B20A	Inner diameter:38.5mm	Flexible Coupling	510641
	2007.06-2012.12		Front	Estate RWD N43B20A	Inner diameter:50mm,537625 and 510596 different structure	Flexible Coupling	537625
	2007.06-2012.12		Front	Estate RWD N43B20A		Flexible Coupling Kit	510596S
	2007.06-2012.12		Front	Estate RWD N43B20A		Flexible Coupling Kit	510641S
320d							
2.0 (95 kw)	1998.02-2001.08	AT	Rear	Saloon RWD M47D204D1		Propshaft	PS901639
	1998.02-2001.08	MT	Rear	Saloon RWD M47D204D1		Propshaft	PS900121
	1998.02-2001.08		Front	Saloon RWD M47D204D1		Flexible Coupling	510596
	1998.02-2001.08		Front	Saloon RWD M47D204D1		Flexible Coupling Kit	510596S
2.0 (100 kw)	1998.02-2001.06	AT	Rear	Saloon RWD M47D204D1		Propshaft	PS901639
	1998.02-2001.06	MT	Rear	Saloon RWD M47D204D1		Propshaft	PS900121
	1998.02-2001.06		Centre	Saloon RWD M47D204D1	Height:45mm	Center Bearing Support	538653
	1998.02-2001.06		Centre	Saloon RWD M47D204D1	Height:46mm	Center Bearing Support	538661
	1998.02-2001.06		Centre	Saloon RWD M47D204D1	Height:23.5mm	Center Bearing Support	538665
	1998.02-2001.06		Front	Saloon RWD M47D204D1	510596 and 537625 different structure	Flexible Coupling	510596
	1998.02-2001.06		Front	Saloon RWD M47D204D1	537625 and 510596 different structure	Flexible Coupling	537625
	1998.02-2001.06		Front	Saloon RWD M47D204D1		Flexible Coupling Kit	510596S
2.0 (110 kw)	2001.09-2005.05	AT	Rear	Saloon RWD M47D204D4		Propshaft	PS901639
	2001.09-2005.05	MT	Rear	Saloon RWD M47D204D4		Propshaft	PS900121
	2001.09-2005.05		Centre	Saloon RWD M47D204D4	Height:45mm	Center Bearing Support	538653
	2001.09-2005.05		Centre	Saloon RWD M47D204D4	Height:46mm	Center Bearing Support	538661
	2001.09-2005.05		Centre	Saloon RWD M47D204D4	Height:23.5mm	Center Bearing Support	538665
	2001.09-2005.05		Front	Saloon RWD M47D204D4	510596 and 537625 different structure	Flexible Coupling	510596
	2001.09-2005.05		Front	Saloon RWD M47D204D4	537625 and 510596 different structure	Flexible Coupling	537625
	2001.09-2005.05		Front	Saloon RWD M47D204D4		Flexible Coupling Kit	510596S
	2004.06-2007.09	AT	Rear	Saloon RWD M47D204D4		Propshaft	PS901638
	2004.06-2007.09		Centre	Saloon RWD M47D204D4		Center Bearing Support	538672
	2004.06-2007.09		Front	Saloon RWD M47D204D4	510596 and 537625 different structure	Flexible Coupling	510596
	2004.06-2007.09		Front	Saloon RWD M47D204D4	537625 and 510596 different structure	Flexible Coupling	537625
	2004.06-2007.09		Rear	Saloon RWD M47D204D4		Flexible Coupling	533878
	2004.06-2007.09		Front	Saloon RWD M47D204D4		Flexible Coupling Kit	510596S
	2004.06-2007.09		Rear	Saloon RWD M47D204D4		Flexible Coupling Kit	538112S
	2004.06-2007.09		Front;Rear	Saloon RWD M47D204D4		Flexible Coupling Kit	517955S
2.0 (120 kw)	2004.12-2011.10	AT	Rear	Saloon RWD M47D204D4/N47D20A/N47D20C		Propshaft	PS901638
	2004.12-2011.10		Centre	Saloon RWD M47D204D4/N47D20A/N47D20C		Center Bearing Support	538672
	2004.12-2011.10		Front	Saloon RWD M47D204D4/N47D20A/N47D20C	510596 and 537625 different structure	Flexible Coupling	510596
	2004.12-2011.10		Front	Saloon RWD M47D204D4/N47D20A/N47D20C	537625 and 510596 different structure	Flexible Coupling	537625
	2004.12-2011.10		Rear	Saloon RWD M47D204D4/N47D20A/N47D20C		Flexible Coupling	533878
	2004.12-2011.10		Front;Rear	Saloon RWD M47D204D4/N47D20A/N47D20C		Flexible Coupling	517955

	YEAR	TRANSM.	FITTING POSITION	BODY STYLE & DRIVE TYPE & ENGINE	REMARKS	PRODUCT	GSP Ref.
BMW							
320d							
2.0 (120 kw)	2004.12-2011.10		Front	Saloon RWD M47D204D4/N47D20A/N47D20C	AT	Flexible Coupling Kit	510596S
	2004.12-2011.10		Front	Saloon RWD M47D204D4/N47D20A/N47D20C	MT	Flexible Coupling Kit	537669S
	2004.12-2011.10		Rear	Saloon RWD M47D204D4/N47D20A/N47D20C	Engine Code:N47 D20 C	Flexible Coupling Kit	538112S
	2004.12-2011.10		Front;Rear	Saloon RWD M47D204D4/N47D20A/N47D20C		Flexible Coupling Kit	517955S
	2011.11-2018.10		Centre	Saloon RWD B47D20A/N47D20C		Center Bearing Support	538672
	2011.11-2018.10		Front	Saloon RWD B47D20A/N47D20C		Flexible Coupling	510596
	2011.11-2018.10		Front	Saloon RWD B47D20A/N47D20C		Flexible Coupling	537625
	2011.11-2018.10		Front;Rear	Saloon RWD B47D20A/N47D20C		Flexible Coupling	517955
	2011.11-2018.10		Front	Saloon RWD B47D20A/N47D20C		Flexible Coupling Kit	510596S
	2011.11-2018.10		Front	Saloon RWD B47D20A/N47D20C		Flexible Coupling Kit	537625S
	2011.11-2018.10		Front;Rear	Saloon RWD B47D20A/N47D20C		Flexible Coupling Kit	517955S
	2018.11-2020.02		Centre	Saloon RWD B47D20B		Center Bearing Support	538640
	2018.11-2020.02		Front	Saloon RWD B47D20B	AT	Flexible Coupling	510596
	2018.11-2020.02		Front;Rear	Saloon RWD B47D20B		Flexible Coupling	517955
	2018.11-2020.02		Front;Rear	Saloon RWD B47D20B		Flexible Coupling Kit	517955S
2.0 (130 kw)	2007.09-2010.02	AT	Rear	Saloon RWD N47D20A/N47D20C		Propshaft	PS901638
	2007.09-2010.02		Centre	Saloon RWD N47D20A/N47D20C		Center Bearing Support	538672
	2007.09-2010.02		Front	Saloon RWD N47D20A/N47D20C	510596 and 537625 different structure	Flexible Coupling	510596
	2007.09-2010.02		Front	Saloon RWD N47D20A/N47D20C	537625 and 510596 different structure	Flexible Coupling	537625
	2007.09-2010.02		Rear	Saloon RWD N47D20A/N47D20C		Flexible Coupling	533878
	2007.09-2010.02		Front;Rear	Saloon RWD N47D20A/N47D20C		Flexible Coupling	517955
	2007.09-2010.02		Front	Saloon RWD N47D20A/N47D20C		Flexible Coupling Kit	510596S
	2007.09-2010.02		Rear	Saloon RWD N47D20A/N47D20C	Engine Code:N47 D20 A;Engine Code:N47 D20 C;AT	Flexible Coupling Kit	538112S
	2007.09-2010.02		Front;Rear	Saloon RWD N47D20A/N47D20C		Flexible Coupling Kit	517955S
2.0 (135 kw)	2010.03-2011.10	AT	Rear	Saloon RWD N47D20C		Propshaft	PS901638
	2010.03-2011.10		Centre	Saloon RWD N47D20C		Center Bearing Support	538672
	2010.03-2011.10		Front	Saloon RWD N47D20C	510596 and 537625 different structure	Flexible Coupling	510596
	2010.03-2011.10		Front	Saloon RWD N47D20C	537625 and 510596 different structure	Flexible Coupling	537625
	2010.03-2011.10		Rear	Saloon RWD N47D20C		Flexible Coupling	533878
	2010.03-2011.10		Front;Rear	Saloon RWD N47D20C		Flexible Coupling	517955
	2010.03-2011.10		Front	Saloon RWD N47D20C		Flexible Coupling Kit	510596S
	2010.03-2011.10		Rear	Saloon RWD N47D20C	AT	Flexible Coupling Kit	538112S
	2010.03-2011.10		Front;Rear	Saloon RWD N47D20C		Flexible Coupling Kit	517955S
	2011.11-2016.03		Centre	Saloon RWD N47D20C		Center Bearing Support	538672
	2011.11-2016.03		Front	Saloon RWD N47D20C		Flexible Coupling	510596
	2011.11-2016.03		Front	Saloon RWD N47D20C		Flexible Coupling	537625
	2011.11-2016.03		Front;Rear	Saloon RWD N47D20C		Flexible Coupling	517955
	2011.11-2016.03		Front	Saloon RWD N47D20C		Flexible Coupling Kit	510596S
	2011.11-2016.03		Front	Saloon RWD N47D20C		Flexible Coupling Kit	537625S
	2011.11-2016.03		Front;Rear	Saloon RWD N47D20C		Flexible Coupling Kit	517955S
2.0 (140 kw)	2015.07-2018.10		Centre	Saloon RWD B47D20A		Center Bearing Support	538672
	2015.07-2018.10		Front	Saloon RWD B47D20A		Flexible Coupling	510596
	2015.07-2018.10		Front	Saloon RWD B47D20A		Flexible Coupling	537625
	2015.07-2018.10		Front;Rear	Saloon RWD B47D20A		Flexible Coupling	517955
	2015.07-2018.10		Front	Saloon RWD B47D20A		Flexible Coupling Kit	537625S
	2018.11-2020.02		Centre	Saloon RWD B47D20B		Center Bearing Support	538640
	2018.11-2020.02		Front	Saloon RWD B47D20B	AT	Flexible Coupling	510596
	2018.11-2020.02		Front;Rear	Saloon RWD B47D20B		Flexible Coupling	517955
	2018.11-2020.02		Front;Rear	Saloon RWD B47D20B		Flexible Coupling Kit	517955S
2.0 (147 kw)	2011.11-2016.03		Centre	Saloon RWD N47D20C		Center Bearing Support	538672
	2011.11-2016.03		Front	Saloon RWD N47D20C		Flexible Coupling	510596
	2011.11-2016.03		Front	Saloon RWD N47D20C		Flexible Coupling	537625
	2011.11-2016.03		Front;Rear	Saloon RWD N47D20C		Flexible Coupling	517955
	2011.11-2016.03		Front	Saloon RWD N47D20C		Flexible Coupling Kit	537625S
	2011.11-2016.03		Front;Rear	Saloon RWD N47D20C		Flexible Coupling Kit	517955S
320d Cabrio							
2.0 (110 kw)	2004.11-2007.02		Centre	Cabriolet RWD M47D204D4		Center Bearing Support	538653
	2004.11-2007.02		Front	Cabriolet RWD M47D204D4	510596 and 537625 different structure	Flexible Coupling	510596
	2004.11-2007.02		Front	Cabriolet RWD M47D204D4	537625 and 510596 different structure	Flexible Coupling	537625
	2004.11-2007.02		Front	Cabriolet RWD M47D204D4		Flexible Coupling Kit	510596S
2.0 (120 kw)	2008.01-2013.12		Centre	Cabriolet RWD N47D20A/N47D20C		Center Bearing Support	538672
	2008.01-2013.12		Front	Cabriolet RWD N47D20A/N47D20C		Flexible Coupling	510596
	2008.01-2013.12		Rear	Cabriolet RWD N47D20A/N47D20C		Flexible Coupling	533878
	2008.01-2013.12		Front;Rear	Cabriolet RWD N47D20A/N47D20C		Flexible Coupling	517955

	YEAR	TRANSM.	FITTING POSITION	BODY STYLE & DRIVE TYPE & ENGINE	REMARKS	PRODUCT	GSP Ref.
BMW							
320d Cabrio							
2.0 (120 kw)	2008.01-2013.12		Front	Cabriolet RWD N47D20A/N47D20C		Flexible Coupling Kit	537669S
	2008.01-2013.12		Rear	Cabriolet RWD N47D20A/N47D20C	AT	Flexible Coupling Kit	538112S
	2008.01-2013.12		Front;Rear	Cabriolet RWD N47D20A/N47D20C		Flexible Coupling Kit	517955S
2.0 (130 kw)	2008.03-2010.02		Centre	Cabriolet RWD N47D20A/N47D20C		Center Bearing Support	538672
	2008.03-2010.02		Front	Cabriolet RWD N47D20A/N47D20C	Inner diameter:50mm,510596 and 537625 different structure	Flexible Coupling	510596
	2008.03-2010.02		Front	Cabriolet RWD N47D20A/N47D20C	Inner diameter:57.5mm	Flexible Coupling	517956
	2008.03-2010.02		Front	Cabriolet RWD N47D20A/N47D20C	Inner diameter:50mm,537625 and 510596 different structure	Flexible Coupling	537625
	2008.03-2010.02		Rear	Cabriolet RWD N47D20A/N47D20C		Flexible Coupling	533878
	2008.03-2010.02		Front;Rear	Cabriolet RWD N47D20A/N47D20C		Flexible Coupling	517955
	2008.03-2010.02		Front	Cabriolet RWD N47D20A/N47D20C		Flexible Coupling Kit	510596S
	2008.03-2010.02		Rear	Cabriolet RWD N47D20A/N47D20C	AT	Flexible Coupling Kit	538112S
	2008.03-2010.02		Front;Rear	Cabriolet RWD N47D20A/N47D20C		Flexible Coupling Kit	517955S
2.0 (135 kw)	2010.03-2013.10		Centre	Cabriolet RWD N47D20C		Center Bearing Support	538672
	2010.03-2013.10		Front	Cabriolet RWD N47D20C		Flexible Coupling	510596
	2010.03-2013.10		Rear	Cabriolet RWD N47D20C		Flexible Coupling	533878
	2010.03-2013.10		Front;Rear	Cabriolet RWD N47D20C		Flexible Coupling	517955
	2010.03-2013.10		Front	Cabriolet RWD N47D20C		Flexible Coupling Kit	510596S
	2010.03-2013.10		Rear	Cabriolet RWD N47D20C	AT	Flexible Coupling Kit	538112S
	2010.03-2013.10		Front;Rear	Cabriolet RWD N47D20C		Flexible Coupling Kit	517955S
2.0 (145 kw)	2007.09-2010.02		Centre	Cabriolet RWD N47D20A/N47D20C		Center Bearing Support	538672
	2007.09-2010.02		Front	Cabriolet RWD N47D20A/N47D20C		Flexible Coupling	510596
	2007.09-2010.02		Rear	Cabriolet RWD N47D20A/N47D20C		Flexible Coupling	533878
	2007.09-2010.02		Front;Rear	Cabriolet RWD N47D20A/N47D20C		Flexible Coupling	517955
	2007.09-2010.02		Rear	Cabriolet RWD N47D20A/N47D20C	AT	Flexible Coupling Kit	538112S
	2007.09-2010.02		Front;Rear	Cabriolet RWD N47D20A/N47D20C		Flexible Coupling Kit	517955S
2.0 (147 kw)	2010.03-2013.10		Centre	Cabriolet RWD N47D20C		Center Bearing Support	538672
	2010.03-2013.10		Front	Cabriolet RWD N47D20C		Flexible Coupling	510596
	2010.03-2013.10		Rear	Cabriolet RWD N47D20C		Flexible Coupling	533878
	2010.03-2013.10		Front;Rear	Cabriolet RWD N47D20C		Flexible Coupling	517955
	2010.03-2013.10		Rear	Cabriolet RWD N47D20C	AT	Flexible Coupling Kit	538112S
	2010.03-2013.10		Front;Rear	Cabriolet RWD N47D20C		Flexible Coupling Kit	517955S
320d Compact							
2.0 (100 kw)	2001.10-2002.12		Front	Hatchback RWD M47D204D4		Flexible Coupling	510596
2.0 (110 kw)	2001.10-2005.02	6MT	Rear	Hatchback RWD M47D204D4	Date from:2003.03,Date to:2004.12	Propshaft	PS901727
	2001.10-2005.02		Centre	Hatchback RWD M47D204D4	Height:45mm	Center Bearing Support	538653
	2001.10-2005.02		Centre	Hatchback RWD M47D204D4	Height:46mm	Center Bearing Support	538661
	2001.10-2005.02		Centre	Hatchback RWD M47D204D4	Height:23.5mm	Center Bearing Support	538665
	2001.10-2005.02		Front	Hatchback RWD M47D204D4	510596 and 537625 different structure	Flexible Coupling	510596
	2001.10-2005.02		Front	Hatchback RWD M47D204D4	537625 and 510596 different structure	Flexible Coupling	537625
	2001.10-2005.02		Front	Hatchback RWD M47D204D4		Flexible Coupling Kit	510596S
320d Coupe							
2.0 (110 kw)	2003.08-2006.07		Centre	Coupe RWD M47D204D4		Center Bearing Support	538653
	2003.08-2006.07		Front	Coupe RWD M47D204D4	510596 and 537625 different structure	Flexible Coupling	510596
	2003.08-2006.07		Front	Coupe RWD M47D204D4	537625 and 510596 different structure	Flexible Coupling	537625
	2003.08-2006.07		Front	Coupe RWD M47D204D4		Flexible Coupling Kit	510596S
2.0 (120 kw)	2007.03-2013.06		Centre	Coupe RWD N47D20A/N47D20C		Center Bearing Support	538672
	2007.03-2013.06		Front	Coupe RWD N47D20A/N47D20C		Flexible Coupling	510596
	2007.03-2013.06		Rear	Coupe RWD N47D20A/N47D20C		Flexible Coupling	533878
	2007.03-2013.06		Front;Rear	Coupe RWD N47D20A/N47D20C		Flexible Coupling	517955
	2007.03-2013.06		Front	Coupe RWD N47D20A/N47D20C		Flexible Coupling Kit	537669S
	2007.03-2013.06		Rear	Coupe RWD N47D20A/N47D20C	AT	Flexible Coupling Kit	538112S
	2007.03-2013.06		Front;Rear	Coupe RWD N47D20A/N47D20C		Flexible Coupling Kit	517955S
2.0 (130 kw)	2006.09-2010.02		Centre	Coupe RWD N47D20A/N47D20C		Center Bearing Support	538672
	2006.09-2010.02		Front	Coupe RWD N47D20A/N47D20C	510596 and 537625 different structure	Flexible Coupling	510596
	2006.09-2010.02		Front	Coupe RWD N47D20A/N47D20C	537625 and 510596 different structure	Flexible Coupling	537625
	2006.09-2010.02		Rear	Coupe RWD N47D20A/N47D20C		Flexible Coupling	533878
	2006.09-2010.02		Front;Rear	Coupe RWD N47D20A/N47D20C		Flexible Coupling	517955
	2006.09-2010.02		Front	Coupe RWD N47D20A/N47D20C		Flexible Coupling Kit	510596S
	2006.09-2010.02		Rear	Coupe RWD N47D20A/N47D20C	AT	Flexible Coupling Kit	538112S
	2006.09-2010.02		Front;Rear	Coupe RWD N47D20A/N47D20C		Flexible Coupling Kit	517955S
2.0 (135 kw)	2010.03-2013.06		Centre	Coupe RWD N47D20C		Center Bearing Support	538672
	2010.03-2013.06		Front	Coupe RWD N47D20C		Flexible Coupling	510596
	2010.03-2013.06		Rear	Coupe RWD N47D20C		Flexible Coupling	533878
	2010.03-2013.06		Front;Rear	Coupe RWD N47D20C		Flexible Coupling	517955

	YEAR	TRANSM.	FITTING POSITION	BODY STYLE & DRIVE TYPE & ENGINE	REMARKS	PRODUCT	GSP Ref.
BMW							
320d Coupe							
2.0 (135 kw)	2010.03-2013.06		Front	Coupe RWD N47D20C		Flexible Coupling Kit	510596S
	2010.03-2013.06		Rear	Coupe RWD N47D20C	AT	Flexible Coupling Kit	538112S
	2010.03-2013.06		Front;Rear	Coupe RWD N47D20C		Flexible Coupling Kit	517955S
2.0 (145 kw)	2006.09-2010.02		Centre	Coupe RWD N47D20A/N47D20C		Center Bearing Support	538672
	2006.09-2010.02		Front	Coupe RWD N47D20A/N47D20C		Flexible Coupling	510596
	2006.09-2010.02		Rear	Coupe RWD N47D20A/N47D20C		Flexible Coupling	533878
	2006.09-2010.02		Front;Rear	Coupe RWD N47D20A/N47D20C		Flexible Coupling	517955
	2006.09-2010.02		Rear	Coupe RWD N47D20A/N47D20C	AT	Flexible Coupling Kit	538112S
	2006.09-2010.02		Front;Rear	Coupe RWD N47D20A/N47D20C		Flexible Coupling Kit	517955S
2.0 (147 kw)	2010.03-2013.06		Centre	Coupe RWD N47D20C		Center Bearing Support	538672
	2010.03-2013.06		Rear	Coupe RWD N47D20C		Flexible Coupling	533878
	2010.03-2013.06		Front;Rear	Coupe RWD N47D20C		Flexible Coupling	517955
	2010.03-2013.06		Rear	Coupe RWD N47D20C	AT	Flexible Coupling Kit	538112S
	2010.03-2013.06		Front;Rear	Coupe RWD N47D20C		Flexible Coupling Kit	517955S
320d Gran Turismo							
2.0 (120 kw)	2013.03-		Centre	Hatchback RWD B47D20A/N47D20C		Center Bearing Support	538672
	2013.03-		Front	Hatchback RWD B47D20A/N47D20C		Flexible Coupling	510596
	2013.03-		Front	Hatchback RWD B47D20A/N47D20C		Flexible Coupling	537625
	2013.03-		Front;Rear	Hatchback RWD B47D20A/N47D20C		Flexible Coupling	517955
	2013.03-		Front	Hatchback RWD B47D20A/N47D20C		Flexible Coupling Kit	537625S
	2013.03-		Front;Rear	Hatchback RWD B47D20A/N47D20C		Flexible Coupling Kit	517955S
2.0 (135 kw)	2013.03-2015.06		Front	Hatchback RWD N47D20C		Flexible Coupling	510596
	2013.03-2015.06		Front	Hatchback RWD N47D20C		Flexible Coupling	537625
	2013.03-2015.06		Front;Rear	Hatchback RWD N47D20C		Flexible Coupling	517955
	2013.03-2015.06		Front	Hatchback RWD N47D20C		Flexible Coupling Kit	510596S
	2013.03-2015.06		Front	Hatchback RWD N47D20C		Flexible Coupling Kit	537625S
	2013.03-2015.06		Front;Rear	Hatchback RWD N47D20C		Flexible Coupling Kit	517955S
2.0 (140 kw)	2015.07-		Centre	Hatchback RWD B47D20A		Center Bearing Support	538672
	2015.07-		Front	Hatchback RWD B47D20A		Flexible Coupling	510596
	2015.07-		Front	Hatchback RWD B47D20A		Flexible Coupling	537625
	2015.07-		Front	Hatchback RWD B47D20A		Flexible Coupling Kit	537625S
2.0 (147 kw)	2013.03-2015.06		Front	Hatchback RWD N47D20C		Flexible Coupling	510596
	2013.03-2015.06		Front	Hatchback RWD N47D20C		Flexible Coupling	537625
	2013.03-2015.06		Front;Rear	Hatchback RWD N47D20C		Flexible Coupling	517955
	2013.03-2015.06		Front	Hatchback RWD N47D20C		Flexible Coupling Kit	537625S
	2013.03-2015.06		Front;Rear	Hatchback RWD N47D20C		Flexible Coupling Kit	517955S
320d Touring							
2.0 (100 kw)	1999.08-2001.06	AT	Rear	Estate RWD M47D204D1		Propshaft	PS901639
	1999.08-2001.06		Centre	Estate RWD M47D204D1	Height:45mm	Center Bearing Support	538653
	1999.08-2001.06		Centre	Estate RWD M47D204D1	Height:46mm	Center Bearing Support	538661
	1999.08-2001.06		Centre	Estate RWD M47D204D1	Height:23.5mm	Center Bearing Support	538665
	1999.08-2001.06		Front	Estate RWD M47D204D1	510596 and 537625 different structure	Flexible Coupling	510596
	1999.08-2001.06		Front	Estate RWD M47D204D1	537625 and 510596 different structure	Flexible Coupling	537625
	1999.08-2001.06		Front	Estate RWD M47D204D1		Flexible Coupling Kit	510596S
2.0 (110 kw)	2001.09-2005.02	AT	Rear	Estate RWD M47D204D4		Propshaft	PS901639
	2001.09-2005.02		Centre	Estate RWD M47D204D4	Height:45mm	Center Bearing Support	538653
	2001.09-2005.02		Centre	Estate RWD M47D204D4	Height:46mm	Center Bearing Support	538661
	2001.09-2005.02		Centre	Estate RWD M47D204D4	Height:23.5mm	Center Bearing Support	538665
	2001.09-2005.02		Front	Estate RWD M47D204D4	510596 and 537625 different structure	Flexible Coupling	510596
	2001.09-2005.02		Front	Estate RWD M47D204D4	537625 and 510596 different structure	Flexible Coupling	537625
	2001.09-2005.02		Front	Estate RWD M47D204D4		Flexible Coupling Kit	510596S
	2004.12-2007.08		Centre	Estate RWD M47D204D4		Center Bearing Support	538672
	2004.12-2007.08		Front	Estate RWD M47D204D4	510596 and 537625 different structure	Flexible Coupling	510596
	2004.12-2007.08		Front	Estate RWD M47D204D4	537625 and 510596 different structure	Flexible Coupling	537625
	2004.12-2007.08		Rear	Estate RWD M47D204D4		Flexible Coupling	533878
	2004.12-2007.08		Front;Rear	Estate RWD M47D204D4		Flexible Coupling	517955
	2004.12-2007.08		Front	Estate RWD M47D204D4		Flexible Coupling Kit	510596S
	2004.12-2007.08		Rear	Estate RWD M47D204D4		Flexible Coupling Kit	538112S
	2004.12-2007.08		Front;Rear	Estate RWD M47D204D4		Flexible Coupling Kit	517955S
2.0 (120 kw)	2005.06-2012.06		Centre	Estate RWD M47D204D4/N47D20A/N47D20C		Center Bearing Support	538672
	2005.06-2012.06		Front	Estate RWD M47D204D4/N47D20A/N47D20C	510596 and 537625 different structure	Flexible Coupling	510596
	2005.06-2012.06		Front	Estate RWD M47D204D4/N47D20A/N47D20C	537625 and 510596 different structure	Flexible Coupling	537625
	2005.06-2012.06		Rear	Estate RWD M47D204D4/N47D20A/N47D20C		Flexible Coupling	533878
	2005.06-2012.06		Front;Rear	Estate RWD M47D204D4/N47D20A/N47D20C		Flexible Coupling	517955

	YEAR	TRANSM.	FITTING POSITION	BODY STYLE & DRIVE TYPE & ENGINE	REMARKS	PRODUCT	GSP Ref.
BMW **320d Touring**							
2.0 (120 kw)	2005.06-2012.06		Front	Estate RWD M47D204D4/N47D20A/N47D20C		Flexible Coupling Kit	510596S
	2005.06-2012.06		Rear	Estate RWD M47D204D4/N47D20A/N47D20C		Flexible Coupling Kit	538112S
	2005.06-2012.06		Front;Rear	Estate RWD M47D204D4/N47D20A/N47D20C		Flexible Coupling Kit	517955S
	2012.07-2019.06		Centre	Estate RWD B47D20A/N47D20C		Center Bearing Support	538672
	2012.07-2019.06		Front	Estate RWD B47D20A/N47D20C		Flexible Coupling	510596
	2012.07-2019.06		Front	Estate RWD B47D20A/N47D20C		Flexible Coupling	537625
	2012.07-2019.06		Front;Rear	Estate RWD B47D20A/N47D20C		Flexible Coupling	517955
	2012.07-2019.06		Front	Estate RWD B47D20A/N47D20C		Flexible Coupling Kit	510596S
	2012.07-2019.06		Front	Estate RWD B47D20A/N47D20C		Flexible Coupling Kit	537625S
	2012.07-2019.06		Front;Rear	Estate RWD B47D20A/N47D20C		Flexible Coupling Kit	517955S
	2019.07-2020.02		Centre	Estate RWD B47D20B		Center Bearing Support	538640
2.0 (130 kw)	2007.06-2012.10		Centre	Estate RWD N47D20A/N47D20C		Center Bearing Support	538672
	2007.06-2012.10		Front	Estate RWD N47D20A/N47D20C	510596 and 537625 different structure	Flexible Coupling	510596
	2007.06-2012.10		Front	Estate RWD N47D20A/N47D20C	537625 and 510596 different structure	Flexible Coupling	537625
	2007.06-2012.10		Rear	Estate RWD N47D20A/N47D20C		Flexible Coupling	533878
	2007.06-2012.10		Front;Rear	Estate RWD N47D20A/N47D20C		Flexible Coupling	517955
	2007.06-2012.10		Front	Estate RWD N47D20A/N47D20C		Flexible Coupling Kit	510596S
	2007.06-2012.10		Rear	Estate RWD N47D20A/N47D20C	Engine Code:N47 D20 C,AT	Flexible Coupling Kit	538112S
	2007.06-2012.10		Front;Rear	Estate RWD N47D20A/N47D20C		Flexible Coupling Kit	517955S
2.0 (135 kw)	2010.03-2012.10		Centre	Estate RWD N47D20C		Center Bearing Support	538672
	2010.03-2012.10		Front	Estate RWD N47D20C	510596 and 537625 different structure	Flexible Coupling	510596
	2010.03-2012.10		Front	Estate RWD N47D20C	537625 and 510596 different structure	Flexible Coupling	537625
	2010.03-2012.10		Rear	Estate RWD N47D20C		Flexible Coupling	533878
	2010.03-2012.10		Front;Rear	Estate RWD N47D20C		Flexible Coupling	517955
	2010.03-2012.10		Front	Estate RWD N47D20C		Flexible Coupling Kit	510596S
	2010.03-2012.10		Rear	Estate RWD N47D20C	AT	Flexible Coupling Kit	538112S
	2010.03-2012.10		Front;Rear	Estate RWD N47D20C		Flexible Coupling Kit	517955S
	2012.07-2016.02		Centre	Estate RWD N47D20C		Center Bearing Support	538672
	2012.07-2016.02		Front	Estate RWD N47D20C		Flexible Coupling	510596
	2012.07-2016.02		Front	Estate RWD N47D20C		Flexible Coupling	537625
	2012.07-2016.02		Front;Rear	Estate RWD N47D20C		Flexible Coupling	517955
	2012.07-2016.02		Front	Estate RWD N47D20C		Flexible Coupling Kit	510596S
	2012.07-2016.02		Front	Estate RWD N47D20C		Flexible Coupling Kit	537625S
	2012.07-2016.02		Front;Rear	Estate RWD N47D20C		Flexible Coupling Kit	517955S
2.0 (140 kw)	2015.07-2019.06		Centre	Estate RWD B47D20A		Center Bearing Support	538672
	2015.07-2019.06		Front	Estate RWD B47D20A		Flexible Coupling	510596
	2015.07-2019.06		Front	Estate RWD B47D20A		Flexible Coupling	537625
	2015.07-2019.06		Front;Rear	Estate RWD B47D20A		Flexible Coupling	517955
	2015.07-2019.06		Front	Estate RWD B47D20A		Flexible Coupling Kit	537625S
	2015.07-2019.06		Front;Rear	Estate RWD B47D20A		Flexible Coupling Kit	517955S
	2019.07-2020.02		Centre	Estate RWD B47D20B		Center Bearing Support	538640
2.0 (145 kw)	2007.02-2010.02		Centre	Estate RWD N47D20A/N47D20C		Center Bearing Support	538672
	2007.02-2010.02		Front	Estate RWD N47D20A/N47D20C		Flexible Coupling	510596
	2007.02-2010.02		Rear	Estate RWD N47D20A/N47D20C		Flexible Coupling	533878
	2007.02-2010.02		Front;Rear	Estate RWD N47D20A/N47D20C		Flexible Coupling	517955
	2007.02-2010.02		Rear	Estate RWD N47D20A/N47D20C		Flexible Coupling Kit	538112S
	2007.02-2010.02		Front;Rear	Estate RWD N47D20A/N47D20C		Flexible Coupling Kit	517955S
2.0 (147 kw)	2010.03-2012.05		Centre	Estate RWD N47D20C		Center Bearing Support	538672
	2010.03-2012.05		Front	Estate RWD N47D20C		Flexible Coupling	510596
	2010.03-2012.05		Rear	Estate RWD N47D20C		Flexible Coupling	533878
	2010.03-2012.05		Front;Rear	Estate RWD N47D20C		Flexible Coupling	517955
	2010.03-2012.05		Rear	Estate RWD N47D20C	AT	Flexible Coupling Kit	538112S
	2010.03-2012.05		Front;Rear	Estate RWD N47D20C		Flexible Coupling Kit	517955S
	2012.07-2016.02		Centre	Estate RWD N47D20C		Center Bearing Support	538672
	2012.07-2016.02		Front	Estate RWD N47D20C		Flexible Coupling	510596
	2012.07-2016.02		Front	Estate RWD N47D20C		Flexible Coupling	537625
	2012.07-2016.02		Front;Rear	Estate RWD N47D20C		Flexible Coupling	517955
	2012.07-2016.02		Front	Estate RWD N47D20C		Flexible Coupling Kit	537625S
	2012.07-2016.02		Front;Rear	Estate RWD N47D20C		Flexible Coupling Kit	517955S
320d xDrive							
2.0 (120 kw)	2008.07-2011.12		Centre	Saloon 4WD N47D20C		Center Bearing Support	538672
	2008.07-2011.12		Rear	Saloon 4WD N47D20C		Flexible Coupling	533878
	2008.07-2011.12		Rear	Saloon 4WD N47D20C		Flexible Coupling Kit	538112S
	2012.08-2018.10		Centre	Saloon 4WD B47D20A/N47D20C		Center Bearing Support	538672

	YEAR	TRANSM.	FITTING POSITION	BODY STYLE & DRIVE TYPE & ENGINE	REMARKS	PRODUCT	GSP Ref.
BMW							
320d xDrive							
2.0 (120 kw)	2012.08-2018.10		Front	Saloon 4WD B47D20A/N47D20C		Flexible Coupling	537625
	2012.08-2018.10		Front;Rear	Saloon 4WD B47D20A/N47D20C		Flexible Coupling	517955
	2012.08-2018.10		Front	Saloon 4WD B47D20A/N47D20C		Flexible Coupling Kit	537625S
	2012.08-2018.10		Front;Rear	Saloon 4WD B47D20A/N47D20C		Flexible Coupling Kit	517955S
	2018.11-2020.02		Centre	Saloon 4WD B47D20B		Center Bearing Support	538640
	2018.11-2020.02		Front	Saloon 4WD B47D20B		Flexible Coupling	537631
2.0 (130 kw)	2008.09-2010.02		Centre	Saloon 4WD N47D20A/N47D20C		Center Bearing Support	538672
	2008.09-2010.02		Front	Saloon 4WD N47D20A/N47D20C		Flexible Coupling	517956
	2008.09-2010.02		Rear	Saloon 4WD N47D20A/N47D20C		Flexible Coupling	533878
	2008.09-2010.02		Front	Saloon 4WD N47D20A/N47D20C		Flexible Coupling Kit	517956S
	2008.09-2010.02		Rear	Saloon 4WD N47D20A/N47D20C		Flexible Coupling Kit	538112S
2.0 (135 kw)	2010.03-2011.10		Centre	Saloon 4WD N47D20C		Center Bearing Support	538672
	2010.03-2011.10		Front	Saloon 4WD N47D20C		Flexible Coupling	517956
	2010.03-2011.10		Rear	Saloon 4WD N47D20C		Flexible Coupling	533878
	2010.03-2011.10		Rear	Saloon 4WD N47D20C		Flexible Coupling Kit	538112S
	2012.08-2015.06	AT/MT	Front	Saloon 4WD N47D20C	Date from:2013.01	Propshaft	PS900112
	2012.08-2015.06	AT	Rear	Saloon 4WD N47D20C		Propshaft	PS901433
	2012.08-2015.06		Centre	Saloon 4WD N47D20C		Center Bearing Support	538672
	2012.08-2015.06		Front	Saloon 4WD N47D20C		Flexible Coupling	537625
	2012.08-2015.06		Front;Rear	Saloon 4WD N47D20C		Flexible Coupling	517955
	2012.08-2015.06		Front	Saloon 4WD N47D20C		Flexible Coupling Kit	537625S
	2012.08-2015.06		Front;Rear	Saloon 4WD N47D20C		Flexible Coupling Kit	517955S
2.0 (140 kw)	2015.07-2018.10		Centre	Saloon 4WD B47D20A		Center Bearing Support	538672
	2015.07-2018.10		Front	Saloon 4WD B47D20A		Flexible Coupling	510596
	2015.07-2018.10		Front	Saloon 4WD B47D20A		Flexible Coupling	537625
	2015.07-2018.10		Front;Rear	Saloon 4WD B47D20A		Flexible Coupling	517955
	2015.07-2018.10		Front	Saloon 4WD B47D20A	510596S and 537625S different structure	Flexible Coupling Kit	510596S
	2015.07-2018.10		Front	Saloon 4WD B47D20A	537625S and 510596S different structure	Flexible Coupling Kit	537625S
	2018.11-2020.02		Centre	Saloon 4WD B47D20B		Center Bearing Support	538640
	2018.11-2020.02		Front	Saloon 4WD B47D20B		Flexible Coupling	537631
	2020.03-		Front	Saloon 4WD B47D20B		Flexible Coupling	510596
2.0 (147 kw)	2012.08-2015.06	AT/MT	Front	Saloon 4WD N47D20C	Date from:2013.01	Propshaft	PS900112
	2012.08-2015.06	AT	Rear	Saloon 4WD N47D20C		Propshaft	PS901433
	2012.08-2015.06		Centre	Saloon 4WD N47D20C		Center Bearing Support	538672
	2012.08-2015.06		Front	Saloon 4WD N47D20C		Flexible Coupling	537625
	2012.08-2015.06		Front;Rear	Saloon 4WD N47D20C		Flexible Coupling	517955
	2012.08-2015.06		Front	Saloon 4WD N47D20C		Flexible Coupling Kit	537625S
	2012.08-2015.06		Front;Rear	Saloon 4WD N47D20C		Flexible Coupling Kit	517955S
320d xDrive Coupe							
2.0 (120 kw)	2008.09-2013.06		Centre	Coupe 4WD N47D20C		Center Bearing Support	538672
	2008.09-2013.06		Rear	Coupe 4WD N47D20C		Flexible Coupling	533878
	2008.09-2013.06		Rear	Coupe 4WD N47D20C		Flexible Coupling Kit	538112S
2.0 (130 kw)	2008.09-2010.02		Centre	Coupe 4WD N47D20C		Center Bearing Support	538672
	2008.09-2010.02		Front	Coupe 4WD N47D20C		Flexible Coupling	517956
	2008.09-2010.02		Rear	Coupe 4WD N47D20C		Flexible Coupling	533878
	2008.09-2010.02		Front	Coupe 4WD N47D20C		Flexible Coupling Kit	517956S
	2008.09-2010.02		Rear	Coupe 4WD N47D20C		Flexible Coupling Kit	538112S
2.0 (135 kw)	2010.03-2013.06		Centre	Coupe 4WD N47D20C		Center Bearing Support	538672
	2010.03-2013.06		Front	Coupe 4WD N47D20C		Flexible Coupling	517956
	2010.03-2013.06		Rear	Coupe 4WD N47D20C		Flexible Coupling	533878
	2010.03-2013.06		Rear	Coupe 4WD N47D20C		Flexible Coupling Kit	538112S
2.0 (145 kw)	2008.09-2010.02		Centre	Coupe 4WD N47D20C		Center Bearing Support	538672
	2008.09-2010.02		Rear	Coupe 4WD N47D20C		Flexible Coupling	533878
	2008.09-2010.02		Rear	Coupe 4WD N47D20C		Flexible Coupling Kit	538112S
2.0 (147 kw)	2010.03-2013.06		Centre	Coupe 4WD N47D20C		Center Bearing Support	538672
	2010.03-2013.06		Rear	Coupe 4WD N47D20C		Flexible Coupling	533878
	2010.03-2013.06		Rear	Coupe 4WD N47D20C		Flexible Coupling Kit	538112S
320d xDrive Gran Turismo							
2.0 (120 kw)	2013.07-		Centre	Hatchback 4WD B47D20A/N47D20C		Center Bearing Support	538672
	2013.07-		Front	Hatchback 4WD B47D20A/N47D20C		Flexible Coupling	537625
	2013.07-		Front;Rear	Hatchback 4WD B47D20A/N47D20C		Flexible Coupling	517955
	2013.07-		Front	Hatchback 4WD B47D20A/N47D20C	510596S and 537625S different structure	Flexible Coupling Kit	510596S
	2013.07-		Front	Hatchback 4WD B47D20A/N47D20C	537625S and 510596S different structure	Flexible Coupling Kit	537625S
	2013.07-		Front;Rear	Hatchback 4WD B47D20A/N47D20C		Flexible Coupling Kit	517955S

	YEAR	TRANSM.	FITTING POSITION	BODY STYLE & DRIVE TYPE & ENGINE	REMARKS	PRODUCT	GSP Ref.
BMW							
320d xDrive Gran Turismo							
2.0 (135 kw)	2013.07-2015.06		Centre	Hatchback 4WD N47D20C		Center Bearing Support	538672
	2013.07-2015.06		Front	Hatchback 4WD N47D20C		Flexible Coupling	537625
	2013.07-2015.06		Front;Rear	Hatchback 4WD N47D20C		Flexible Coupling	517955
	2013.07-2015.06		Front	Hatchback 4WD N47D20C		Flexible Coupling Kit	537625S
	2013.07-2015.06		Front;Rear	Hatchback 4WD N47D20C		Flexible Coupling Kit	517955S
2.0 (140 kw)	2015.07-		Centre	Hatchback 4WD B47D20A		Center Bearing Support	538672
	2015.07-		Front	Hatchback 4WD B47D20A		Flexible Coupling	537625
	2015.07-		Front;Rear	Hatchback 4WD B47D20A		Flexible Coupling	517955
	2015.07-		Front	Hatchback 4WD B47D20A	510596S and 537625S different structure	Flexible Coupling Kit	510596S
	2015.07-		Front	Hatchback 4WD B47D20A	537625S and 510596S different structure	Flexible Coupling Kit	537625S
2.0 (147 kw)	2013.07-2015.06		Front	Hatchback 4WD N47D20C		Flexible Coupling	537625
	2013.07-2015.06		Front;Rear	Hatchback 4WD N47D20C		Flexible Coupling	517955
	2013.07-2015.06		Front	Hatchback 4WD N47D20C		Flexible Coupling Kit	537625S
	2013.07-2015.06		Front;Rear	Hatchback 4WD N47D20C		Flexible Coupling Kit	517955S
320d xDrive Touring							
2.0 (120 kw)	2009.07-2012.10		Centre	Estate 4WD N47D20C		Center Bearing Support	538672
	2009.07-2012.10		Rear	Estate 4WD N47D20C		Flexible Coupling	533878
	2009.07-2012.10		Rear	Estate 4WD N47D20C		Flexible Coupling Kit	538112S
	2012.06-2019.06		Centre	Estate 4WD B47D20A/N47D20C		Center Bearing Support	538672
	2012.06-2019.06		Front	Estate 4WD B47D20A/N47D20C		Flexible Coupling	510596
	2012.06-2019.06		Front	Estate 4WD B47D20A/N47D20C		Flexible Coupling	537625
	2012.06-2019.06		Front;Rear	Estate 4WD B47D20A/N47D20C		Flexible Coupling	517955
	2012.06-2019.06		Front	Estate 4WD B47D20A/N47D20C	510596S and 537625S different structure	Flexible Coupling Kit	510596S
	2012.06-2019.06		Front	Estate 4WD B47D20A/N47D20C	537625S and 510596S different structure	Flexible Coupling Kit	537625S
	2012.06-2019.06		Front;Rear	Estate 4WD B47D20A/N47D20C		Flexible Coupling Kit	517955S
	2019.07-2020.02		Centre	Estate 4WD B47D20B		Center Bearing Support	538640
	2019.07-2020.02		Front	Estate 4WD B47D20B		Flexible Coupling	510596
2.0 (130 kw)	2008.09-2010.02		Centre	Estate 4WD N47D20C		Center Bearing Support	538672
	2008.09-2010.02		Front	Estate 4WD N47D20C		Flexible Coupling	517956
	2008.09-2010.02		Rear	Estate 4WD N47D20C		Flexible Coupling	533878
	2008.09-2010.02		Front	Estate 4WD N47D20C		Flexible Coupling Kit	517956S
	2008.09-2010.02		Rear	Estate 4WD N47D20C		Flexible Coupling Kit	538112S
2.0 (135 kw)	2010.03-2012.06		Centre	Estate 4WD N47D20C		Center Bearing Support	538672
	2010.03-2012.06		Front	Estate 4WD N47D20C		Flexible Coupling	517956
	2010.03-2012.06		Rear	Estate 4WD N47D20C		Flexible Coupling	533878
	2010.03-2012.06		Rear	Estate 4WD N47D20C		Flexible Coupling Kit	538112S
	2013.03-2015.06	AT	Rear	Estate 4WD N47D20C		Propshaft	PS901433
	2013.03-2015.06		Centre	Estate 4WD N47D20C		Center Bearing Support	538672
	2013.03-2015.06		Front	Estate 4WD N47D20C		Flexible Coupling	537625
	2013.03-2015.06		Front;Rear	Estate 4WD N47D20C		Flexible Coupling	517955
	2013.03-2015.06		Front	Estate 4WD N47D20C		Flexible Coupling Kit	537625S
	2013.03-2015.06		Front;Rear	Estate 4WD N47D20C		Flexible Coupling Kit	517955S
2.0 (140 kw)	2015.07-2019.06		Centre	Estate 4WD B47D20A		Center Bearing Support	538672
	2015.07-2019.06		Front	Estate 4WD B47D20A		Flexible Coupling	510596
	2015.07-2019.06		Front	Estate 4WD B47D20A		Flexible Coupling	537625
	2015.07-2019.06		Front;Rear	Estate 4WD B47D20A		Flexible Coupling	517955
	2015.07-2019.06		Front	Estate 4WD B47D20A	510596S and 537625S different structure	Flexible Coupling Kit	510596S
	2015.07-2019.06		Front	Estate 4WD B47D20A	537625S and 510596S different structure	Flexible Coupling Kit	537625S
	2019.07-2020.02		Centre	Estate 4WD B47D20B		Center Bearing Support	538640
	2019.07-2020.02		Front	Estate 4WD B47D20B		Flexible Coupling	510596
2.0 (145 kw)	2008.02-2010.02		Centre	Estate 4WD N47D20C		Center Bearing Support	538672
2.0 (147 kw)	2010.03-2012.05		Centre	Estate 4WD N47D20C		Center Bearing Support	538672
	2010.03-2012.05		Rear	Estate 4WD N47D20C		Flexible Coupling	533878
	2010.03-2012.05		Rear	Estate 4WD N47D20C		Flexible Coupling Kit	538112S
	2013.03-2015.06	AT	Rear	Estate 4WD N47D20C		Propshaft	PS901433
	2013.03-2015.06		Centre	Estate 4WD N47D20C		Center Bearing Support	538672
	2013.03-2015.06		Front	Estate 4WD N47D20C		Flexible Coupling	537625
	2013.03-2015.06		Front;Rear	Estate 4WD N47D20C		Flexible Coupling	517955
	2013.03-2015.06		Front	Estate 4WD N47D20C		Flexible Coupling Kit	537625S
	2013.03-2015.06		Front;Rear	Estate 4WD N47D20C		Flexible Coupling Kit	517955S
320i							
1.6 (125 kw)	2012.11-2016.06		Centre	Saloon RWD N13B16A		Center Bearing Support	538672
	2012.11-2016.06		Front	Saloon RWD N13B16A	AT,Inner diameter:50mm,510596 and 537625 different structure	Flexible Coupling	510596
	2012.11-2016.06		Front	Saloon RWD N13B16A	MT,Inner diameter:38.5mm	Flexible Coupling	510597

	YEAR	TRANSM.	FITTING POSITION	BODY STYLE & DRIVE TYPE & ENGINE	REMARKS	PRODUCT	GSP Ref.
BMW **320i**							
1.6 (125 kw)	2012.11-2016.06		Front	Saloon RWD N13B16A	AT,Inner diameter:50mm,510596 and 537625 different structure	Flexible Coupling	537625
	2012.11-2016.06		Front	Saloon RWD N13B16A	Inner diameter:50mm,510596S and 537625S different structure	Flexible Coupling Kit	510596S
	2012.11-2016.06		Front	Saloon RWD N13B16A	Inner diameter:38.5mm	Flexible Coupling Kit	510597S
	2012.11-2016.06		Front	Saloon RWD N13B16A	Inner diameter:50mm,537625S and 510596S different structure	Flexible Coupling Kit	537625S
	2019.03-		Centre	Saloon RWD B48B16A		Center Bearing Support	538640
	2019.03-		Front	Saloon RWD B48B16A	Width:30mm	Flexible Coupling	510596
	2019.03-		Front	Saloon RWD B48B16A	Width:32mm	Flexible Coupling	533422
2.0 (110 kw)	1991.01-1998.02		Centre	Saloon RWD M50B206S1/M50B206S2/M52B206S3	Installation size:160mm	Center Bearing Support	538661
	1991.01-1998.02		Centre	Saloon RWD M50B206S1/M50B206S2/M52B206S3	Installation size:130.6mm	Center Bearing Support	538677
	1991.01-1998.02		Front	Saloon RWD M50B206S1/M50B206S2/M52B206S3		Flexible Coupling	510597
	1991.01-1998.02		Front	Saloon RWD M50B206S1/M50B206S2/M52B206S3		Flexible Coupling	510641
	1991.01-1998.02		Front	Saloon RWD M50B206S1/M50B206S2/M52B206S3		Flexible Coupling Kit	510597S
	1991.01-1998.02		Front	Saloon RWD M50B206S1/M50B206S2/M52B206S3		Flexible Coupling Kit	510641S
	1998.02-2000.07	AT	Rear	Saloon RWD M52B206S4		Propshaft	PS901435
	1998.02-2000.07		Centre	Saloon RWD M52B206S4		Center Bearing Support	538653
	1998.02-2000.07		Front	Saloon RWD M52B206S4	Inner diameter:50mm,510596 and 537625 different structure	Flexible Coupling	510596
	1998.02-2000.07		Front	Saloon RWD M52B206S4	Inner diameter:38mm	Flexible Coupling	510597
	1998.02-2000.07		Front	Saloon RWD M52B206S4	Inner diameter:50mm,537625 and 510596 different structure	Flexible Coupling	537625
	1998.02-2000.07		Front	Saloon RWD M52B206S4		Flexible Coupling Kit	510596S
	1998.02-2000.07		Front	Saloon RWD M52B206S4		Flexible Coupling Kit	510597S
	2004.12-2007.08	6AT	Rear	Saloon RWD N46B20B/N46B20C/N46B20CB		Propshaft	PS900125
	2004.12-2007.08	MT	Rear	Saloon RWD N46B20B/N46B20C/N46B20CB		Propshaft	PS900118
	2004.12-2007.08		Centre	Saloon RWD N46B20B/N46B20C/N46B20CB		Center Bearing Support	538672
	2004.12-2007.08		Front	Saloon RWD N46B20B/N46B20C/N46B20CB	AT	Flexible Coupling	510596
	2004.12-2007.08		Front	Saloon RWD N46B20B/N46B20C/N46B20CB	MT	Flexible Coupling	510641
	2004.12-2007.08		Front	Saloon RWD N46B20B/N46B20C/N46B20CB		Flexible Coupling Kit	510641S
2.0 (115 kw)	2007.02-2011.12	6AT	Rear	Saloon RWD N46B20B/N46B20C	Model year to:2008	Propshaft	PS900125
	2007.02-2011.12	MT	Rear	Saloon RWD N46B20B/N46B20C		Propshaft	PS900118
	2007.02-2011.12		Centre	Saloon RWD N46B20B/N46B20C		Center Bearing Support	538672
	2007.02-2011.12		Front	Saloon RWD N46B20B/N46B20C		Flexible Coupling	510596
	2007.02-2011.12		Front	Saloon RWD N46B20B/N46B20C		Flexible Coupling	510641
	2007.02-2011.12		Front	Saloon RWD N46B20B/N46B20C		Flexible Coupling Kit	510641S
2.0 (120 kw)	2007.03-2011.12	AT	Rear	Saloon RWD N43B20A	Model year to:2008	Propshaft	PS900125
	2007.03-2011.12		Centre	Saloon RWD N43B20A		Center Bearing Support	538672
	2007.03-2011.12		Front	Saloon RWD N43B20A		Flexible Coupling	510596
	2007.03-2011.12		Front	Saloon RWD N43B20A		Flexible Coupling	510641
	2007.03-2011.12		Front	Saloon RWD N43B20A		Flexible Coupling Kit	510641S
2.0 (125 kw)	2009.07-2011.10	AT	Rear	Saloon RWD N43B20A	Model year to:2008	Propshaft	PS900125
	2009.07-2011.10		Centre	Saloon RWD N43B20A		Center Bearing Support	538672
	2009.07-2011.10		Front	Saloon RWD N43B20A	Inner diameter:50mm,510596 and 537625 different structure	Flexible Coupling	510596
	2009.07-2011.10		Front	Saloon RWD N43B20A	Inner diameter:38.5mm	Flexible Coupling	510641
	2009.07-2011.10		Front	Saloon RWD N43B20A	Inner diameter:50mm,537625 and 510596 different structure	Flexible Coupling	537625
	2009.07-2011.10		Front	Saloon RWD N43B20A		Flexible Coupling Kit	510596S
	2009.07-2011.10		Front	Saloon RWD N43B20A		Flexible Coupling Kit	510641S
2.0 (127 kw)	2005.09-2006.08		Centre	Saloon RWD N45B20A		Center Bearing Support	538672
	2005.09-2006.08		Front	Saloon RWD N45B20A		Flexible Coupling	510641
	2005.09-2006.08		Front	Saloon RWD N45B20A		Flexible Coupling Kit	510641S
2.0 (134 kw)	2012.03-2018.10	AT	Rear	Saloon RWD N20 B20 A, N20 B20 B	Model year to:2015	Propshaft	PS901432
2.0 (135 kw)	2012.03-2018.10	AT	Rear	Saloon RWD N20B20A/N20B20B	Model year to:2015	Propshaft	PS901432
	2012.03-2018.10		Centre	Saloon RWD N20B20A/N20B20B		Center Bearing Support	538672
	2012.03-2018.10		Front	Saloon RWD N20B20A/N20B20B		Flexible Coupling	510596
	2012.03-2018.10		Front	Saloon RWD N20B20A/N20B20B		Flexible Coupling	510597
	2012.03-2018.10		Front	Saloon RWD N20B20A/N20B20B		Flexible Coupling	537625
	2012.03-2018.10		Front	Saloon RWD N20B20A/N20B20B	Inner diameter:50mm,510596S and 537625S different structure	Flexible Coupling Kit	510596S
	2012.03-2018.10		Front	Saloon RWD N20B20A/N20B20B	Inner diameter:38.5mm	Flexible Coupling Kit	510597S
	2012.03-2018.10		Front	Saloon RWD N20B20A/N20B20B	Inner diameter:50mm,537625S and 510596S different structure	Flexible Coupling Kit	537625S
	2015.07-2018.10		Centre	Saloon RWD B48B20A		Center Bearing Support	538672
	2015.07-2018.10		Front	Saloon RWD B48B20A	Inner diameter:50mm,510596 and 537625 different structure	Flexible Coupling	510596
	2015.07-2018.10		Front	Saloon RWD B48B20A	Inner diameter:38.5mm	Flexible Coupling	510597
	2015.07-2018.10		Front	Saloon RWD B48B20A	Inner diameter:50mm,537625 and 510596 different structure	Flexible Coupling	537625
	2015.07-2018.10		Front	Saloon RWD B48B20A		Flexible Coupling Kit	510596S
	2015.07-2018.10		Front	Saloon RWD B48B20A		Flexible Coupling Kit	537625S
	2019.03-		Centre	Saloon RWD B48B20A/B48B20B		Center Bearing Support	538640

	YEAR	TRANSM.	FITTING POSITION	BODY STYLE & DRIVE TYPE & ENGINE	REMARKS	PRODUCT	GSP Ref.
BMW							
320i							
2.2 (120 kw)	2000.08-2005.02	AT	Rear	Saloon RWD M54B226S1		Propshaft	PS901435
	2000.08-2005.02	MT	Rear	Saloon RWD M54B226S1		Propshaft	PS900114
	2000.08-2005.02		Front	Saloon RWD M54B226S1		Flexible Coupling	510596
2.2 (125 kw)	2000.09-2005.02	AT	Rear	Saloon RWD M54B226S1		Propshaft	PS901435
	2000.09-2005.02	MT	Rear	Saloon RWD M54B226S1		Propshaft	PS900114
	2000.09-2005.02		Centre	Saloon RWD M54B226S1		Center Bearing Support	538653
	2000.09-2005.02		Front	Saloon RWD M54B226S1	Inner diameter:50mm,510596 and 537625 different structure	Flexible Coupling	510596
	2000.09-2005.02		Front	Saloon RWD M54B226S1	Inner diameter:38mm	Flexible Coupling	510597
	2000.09-2005.02		Front	Saloon RWD M54B226S1	Inner diameter:50mm,537625 and 510596 different structure	Flexible Coupling	537625
	2000.09-2005.02		Front	Saloon RWD M54B226S1		Flexible Coupling Kit	510596S
	2000.09-2005.02		Front	Saloon RWD M54B226S1		Flexible Coupling Kit	510597S
320i Cabrio							
2.0 (110 kw)	1993.12-1999.11		Centre	Cabriolet RWD M50B206S2/M52B206S3	Installation size:160mm	Center Bearing Support	538661
	1993.12-1999.11		Centre	Cabriolet RWD M50B206S2/M52B206S3	Installation size:130.6mm	Center Bearing Support	538677
	1993.12-1999.11		Front	Cabriolet RWD M50B206S2/M52B206S3		Flexible Coupling	510597
	1993.12-1999.11		Front	Cabriolet RWD M50B206S2/M52B206S3		Flexible Coupling	510641
	1993.12-1999.11		Front	Cabriolet RWD M50B206S2/M52B206S3		Flexible Coupling Kit	510597S
	1993.12-1999.11		Front	Cabriolet RWD M50B206S2/M52B206S3		Flexible Coupling Kit	510641S
2.0 (115 kw)	2007.01-2013.08	AT	Rear	Cabriolet RWD N46B20B	Model year to:2010	Propshaft	PS900125
	2007.01-2013.08		Centre	Cabriolet RWD N46B20B		Center Bearing Support	538672
	2007.01-2013.08		Front	Cabriolet RWD N46B20B		Flexible Coupling	510596
	2007.01-2013.08		Front	Cabriolet RWD N46B20B		Flexible Coupling	510641
	2007.01-2013.08		Front	Cabriolet RWD N46B20B		Flexible Coupling Kit	510641S
2.0 (120 kw)	2007.01-2013.10	AT	Rear	Cabriolet RWD N43B20A	Model year to:2010	Propshaft	PS900125
	2007.01-2013.10		Centre	Cabriolet RWD N43B20A		Center Bearing Support	538672
	2007.01-2013.10		Front	Cabriolet RWD N43B20A		Flexible Coupling	510596
	2007.01-2013.10		Front	Cabriolet RWD N43B20A		Flexible Coupling	510641
	2007.01-2013.10		Front	Cabriolet RWD N43B20A		Flexible Coupling Kit	510641S
2.0 (125 kw)	2007.03-2013.10	AT	Rear	Cabriolet RWD N43B20A	Model year to:2010	Propshaft	PS900125
	2007.03-2013.10		Centre	Cabriolet RWD N43B20A		Center Bearing Support	538672
	2007.03-2013.10		Front	Cabriolet RWD N43B20A	Inner diameter:50mm,510596 and 537625 different structure	Flexible Coupling	510596
	2007.03-2013.10		Front	Cabriolet RWD N43B20A	Inner diameter:38.5mm	Flexible Coupling	510641
	2007.03-2013.10		Front	Cabriolet RWD N43B20A	Inner diameter:50mm,537625 and 510596 different structure	Flexible Coupling	537625
	2007.03-2013.10		Front	Cabriolet RWD N43B20A		Flexible Coupling Kit	510596S
	2007.03-2013.10		Front	Cabriolet RWD N43B20A		Flexible Coupling Kit	510641S
2.2 (120 kw)	2000.08-2007.12	MT	Rear	Cabriolet RWD M54B226S1		Propshaft	PS900114
	2000.08-2007.12		Front	Cabriolet RWD M54B226S1		Flexible Coupling	510596
2.2 (125 kw)	2000.08-2007.02	MT	Rear	Cabriolet RWD M54B226S1		Propshaft	PS900114
	2000.08-2007.02		Centre	Cabriolet RWD M54B226S1		Center Bearing Support	538653
	2000.08-2007.02		Front	Cabriolet RWD M54B226S1	Inner diameter:50mm,510596 and 537625 different structure	Flexible Coupling	510596
	2000.08-2007.02		Front	Cabriolet RWD M54B226S1	Inner diameter:38mm	Flexible Coupling	510597
	2000.08-2007.02		Front	Cabriolet RWD M54B226S1	Inner diameter:50mm,537625 and 510596 different structure	Flexible Coupling	537625
	2000.08-2007.02		Front	Cabriolet RWD M54B226S1		Flexible Coupling Kit	510596S
	2000.08-2007.02		Front	Cabriolet RWD M54B226S1		Flexible Coupling Kit	510597S
320i Coupe							
2.0 (110 kw)	1991.12-1998.11		Centre	Coupe RWD M50B206S1/M50B206S2/M52B206S3	Installation size:160mm	Center Bearing Support	538661
	1991.12-1998.11		Centre	Coupe RWD M50B206S1/M50B206S2/M52B206S3	Installation size:130.6mm	Center Bearing Support	538677
	1991.12-1998.11		Front	Coupe RWD M50B206S1/M50B206S2/M52B206S3		Flexible Coupling	510597
	1991.12-1998.11		Front	Coupe RWD M50B206S1/M50B206S2/M52B206S3		Flexible Coupling	510641
	1991.12-1998.11		Front	Coupe RWD M50B206S1/M50B206S2/M52B206S3		Flexible Coupling Kit	510597S
	1991.12-1998.11		Front	Coupe RWD M50B206S1/M50B206S2/M52B206S3		Flexible Coupling Kit	510641S
	1999.07-2000.07		Centre	Coupe RWD M52B206S4		Center Bearing Support	538653
	1999.07-2000.07		Front	Coupe RWD M52B206S4	Inner diameter:50mm,510596 and 537625 different structure	Flexible Coupling	510596
	1999.07-2000.07		Front	Coupe RWD M52B206S4	Inner diameter:38mm	Flexible Coupling	510597
	1999.07-2000.07		Front	Coupe RWD M52B206S4	Inner diameter:50mm,537625 and 510596 different structure	Flexible Coupling	537625
	1999.07-2000.07		Front	Coupe RWD M52B206S4		Flexible Coupling Kit	510596S
	1999.07-2000.07		Front	Coupe RWD M52B206S4		Flexible Coupling Kit	510597S
2.0 (115 kw)	2007.06-2013.12	6AT	Rear	Coupe RWD N46B20B	Model year to:2010	Propshaft	PS900125
	2007.06-2013.12	MT	Rear	Coupe RWD N46B20B		Propshaft	PS900118
	2007.06-2013.12		Centre	Coupe RWD N46B20B		Center Bearing Support	538672
	2007.06-2013.12		Front	Coupe RWD N46B20B	AT	Flexible Coupling	510596
	2007.06-2013.12		Front	Coupe RWD N46B20B	MT	Flexible Coupling	510641
	2007.06-2013.12		Front	Coupe RWD N46B20B		Flexible Coupling Kit	510641S

	YEAR	TRANSM.	FITTING POSITION	BODY STYLE & DRIVE TYPE & ENGINE	REMARKS	PRODUCT	GSP Ref.
BMW							
320i Coupe							
2.0 (120 kw)	2008.09-2013.06	AT	Rear	Coupe RWD N43B20A	Model year to:2010	Propshaft	PS900125
	2008.09-2013.06		Centre	Coupe RWD N43B20A		Center Bearing Support	538672
	2008.09-2013.06		Front	Coupe RWD N43B20A		Flexible Coupling	510596
	2008.09-2013.06		Front	Coupe RWD N43B20A		Flexible Coupling	510641
	2008.09-2013.06		Front	Coupe RWD N43B20A		Flexible Coupling Kit	510641S
2.0 (125 kw)	2007.06-2013.06	AT	Rear	Coupe RWD N43B20A	Model year to:2010	Propshaft	PS900125
	2007.06-2013.06		Centre	Coupe RWD N43B20A		Center Bearing Support	538672
	2007.06-2013.06		Front	Coupe RWD N43B20A	Inner diameter:50mm,510596 and 537625 different structure	Flexible Coupling	510596
	2007.06-2013.06		Front	Coupe RWD N43B20A	Inner diameter:38.5mm	Flexible Coupling	510641
	2007.06-2013.06		Front	Coupe RWD N43B20A	Inner diameter:50mm,537625 and 510596 different structure	Flexible Coupling	537625
	2007.06-2013.06		Front	Coupe RWD N43B20A		Flexible Coupling Kit	510596S
	2007.06-2013.06		Front	Coupe RWD N43B20A		Flexible Coupling Kit	510641S
2.2 (120 kw)	2001.01-2003.12	AT	Rear	Coupe RWD M54B226S1		Propshaft	PS901435
	2001.01-2003.12	MT	Rear	Coupe RWD M54B226S1		Propshaft	PS900114
	2001.01-2003.12		Front	Coupe RWD M54B226S1		Flexible Coupling	510596
2.2 (125 kw)	2000.08-2006.07	AT	Rear	Coupe RWD M54B226S1		Propshaft	PS901435
	2000.08-2006.07	MT	Rear	Coupe RWD M54B226S1		Propshaft	PS900114
	2000.08-2006.07		Centre	Coupe RWD M54B226S1		Center Bearing Support	538653
	2000.08-2006.07		Front	Coupe RWD M54B226S1	Inner diameter:50mm,510596 and 537625 different structure	Flexible Coupling	510596
	2000.08-2006.07		Front	Coupe RWD M54B226S1	Inner diameter:38mm	Flexible Coupling	510597
	2000.08-2006.07		Front	Coupe RWD M54B226S1	Inner diameter:50mm,537625 and 510596 different structure	Flexible Coupling	537625
	2000.08-2006.07		Front	Coupe RWD M54B226S1		Flexible Coupling Kit	510596S
	2000.08-2006.07		Front	Coupe RWD M54B226S1		Flexible Coupling Kit	510597S
320i Gran Turismo							
2.0 (120 kw)	2013.03-2016.06	AT	Rear	Hatchback RWD N20B20A		Propshaft	PS900148
	2013.03-2016.06		Front	Hatchback RWD N20B20A	AT,Inner diameter:50mm,510596 and 537625 different structure	Flexible Coupling	510596
	2013.03-2016.06		Front	Hatchback RWD N20B20A	MT,Inner diameter:38.5mm	Flexible Coupling	510597
	2013.03-2016.06		Front	Hatchback RWD N20B20A	AT,Inner diameter:50mm,510596 and 537625 different structure	Flexible Coupling	537625
	2013.03-2016.06		Front	Hatchback RWD N20B20A	Inner diameter:50mm,510596S and 537625S different structure	Flexible Coupling Kit	510596S
	2013.03-2016.06		Front	Hatchback RWD N20B20A	Inner diameter:38.5mm	Flexible Coupling Kit	510597S
	2013.03-2016.06		Front	Hatchback RWD N20B20A	Inner diameter:50mm,537625S and 510596S different structure	Flexible Coupling Kit	537625S
	2016.06-		Front	Hatchback RWD B48B20A		Flexible Coupling	510596
2.0 (135 kw)	2013.03-2017.05	AT	Rear	Hatchback RWD N20B20A/N20B20B		Propshaft	PS900148
	2013.03-2017.05		Front	Hatchback RWD N20B20A/N20B20B		Flexible Coupling	510596
	2013.03-2017.05		Front	Hatchback RWD N20B20A/N20B20B		Flexible Coupling	510597
	2013.03-2017.05		Front	Hatchback RWD N20B20A/N20B20B		Flexible Coupling	537625
	2013.03-2017.05		Front	Hatchback RWD N20B20A/N20B20B	Inner diameter:50mm,510596S and 537625S different structure	Flexible Coupling Kit	510596S
	2013.03-2017.05		Front	Hatchback RWD N20B20A/N20B20B	Inner diameter:38.5mm	Flexible Coupling Kit	510597S
	2013.03-2017.05		Front	Hatchback RWD N20B20A/N20B20B	Inner diameter:50mm,537625S and 510596S different structure	Flexible Coupling Kit	537625S
	2016.06-		Front	Hatchback RWD B48B20A		Flexible Coupling	510596
	2016.06-		Front	Hatchback RWD B48B20A		Flexible Coupling	537625
	2016.06-		Front	Hatchback RWD B48B20A		Flexible Coupling Kit	510596S
	2016.06-		Front	Hatchback RWD B48B20A		Flexible Coupling Kit	537625S
320i Touring							
2.0 (110 kw)	1995.01-1999.04		Centre	Estate RWD M52B206S3	Installation size:160mm	Center Bearing Support	538661
	1995.01-1999.04		Centre	Estate RWD M52B206S3	Installation size:130.6mm	Center Bearing Support	538677
	1995.01-1999.04		Front	Estate RWD M52B206S3		Flexible Coupling	510597
	1995.01-1999.04		Front	Estate RWD M52B206S3		Flexible Coupling	510641
	1995.01-1999.04		Front	Estate RWD M52B206S3		Flexible Coupling Kit	510597S
	1995.01-1999.04		Front	Estate RWD M52B206S3		Flexible Coupling Kit	510641S
	1999.08-2000.07	AT	Rear	Estate RWD M52B206S4		Propshaft	PS901435
	1999.08-2000.07		Centre	Estate RWD M52B206S4		Center Bearing Support	538653
	1999.08-2000.07		Front	Estate RWD M52B206S4	Inner diameter:50mm,510596 and 537625 different structure	Flexible Coupling	510596
	1999.08-2000.07		Front	Estate RWD M52B206S4	Inner diameter:38mm	Flexible Coupling	510597
	1999.08-2000.07		Front	Estate RWD M52B206S4	Inner diameter:50mm,537625 and 510596 different structure	Flexible Coupling	537625
	1999.08-2000.07		Front	Estate RWD M52B206S4		Flexible Coupling Kit	510596S
	1999.08-2000.07		Front	Estate RWD M52B206S4		Flexible Coupling Kit	510597S
	2005.09-2012.12	6AT	Rear	Estate RWD N46B20B/N46B20C	Model year to:2008	Propshaft	PS900125
	2005.09-2012.12	MT	Rear	Estate RWD N46B20B/N46B20C		Propshaft	PS900118
	2005.09-2012.12		Centre	Estate RWD N46B20B/N46B20C		Center Bearing Support	538672
	2005.09-2012.12		Front	Estate RWD N46B20B/N46B20C	Inner diameter:50mm,510596 and 537625 different structure	Flexible Coupling	510596
	2005.09-2012.12		Front	Estate RWD N46B20B/N46B20C	Inner diameter:38.5mm	Flexible Coupling	510641
	2005.09-2012.12		Front	Estate RWD N46B20B/N46B20C	Inner diameter:50mm,537625 and 510596 different structure	Flexible Coupling	537625
	2005.09-2012.12		Front	Estate RWD N46B20B/N46B20C		Flexible Coupling Kit	510596S

	YEAR	TRANSM.	FITTING POSITION	BODY STYLE & DRIVE TYPE & ENGINE	REMARKS	PRODUCT	GSP Ref.
BMW **320i Touring**							
2.0 (110 kw)	2005.09-2012.12		Front	Estate RWD N46B20B/N46B20C		Flexible Coupling Kit	510641S
2.0 (115 kw)	2007.06-2012.10	AT	Rear	Estate RWD N43B20A	Model year to:2008	Propshaft	PS900125
	2007.06-2012.10		Centre	Estate RWD N43B20A		Center Bearing Support	538672
2.0 (120 kw)	2007.06-2012.05	AT	Rear	Estate RWD N43B20A	Model year to:2008	Propshaft	PS900125
	2007.06-2012.05		Centre	Estate RWD N43B20A		Center Bearing Support	538672
	2007.06-2012.05		Front	Estate RWD N43B20A		Flexible Coupling	510596
	2007.06-2012.05		Front	Estate RWD N43B20A		Flexible Coupling	510641
	2007.06-2012.05		Front	Estate RWD N43B20A		Flexible Coupling Kit	510641S
	2012.11-2015.06	AT	Rear	Estate RWD N20B20B		Propshaft	PS901432
	2012.11-2015.06		Centre	Estate RWD N20B20B		Center Bearing Support	538672
	2012.11-2015.06		Front	Estate RWD N20B20B	AT,Inner diameter:50mm,510596 and 537625 different structure	Flexible Coupling	510596
	2012.11-2015.06		Front	Estate RWD N20B20B	MT,Inner diameter:38.5mm	Flexible Coupling	510597
	2012.11-2015.06		Front	Estate RWD N20B20B	AT,Inner diameter:50mm,510596 and 537625 different structure	Flexible Coupling	537625
	2012.11-2015.06		Front	Estate RWD N20B20B	Inner diameter:50mm,510596S and 537625S different structure	Flexible Coupling Kit	510596S
	2012.11-2015.06		Front	Estate RWD N20B20B	Inner diameter:38.5mm	Flexible Coupling Kit	510597S
	2012.11-2015.06		Front	Estate RWD N20B20B	Inner diameter:50mm,537625S and 510596S different structure	Flexible Coupling Kit	537625S
2.0 (125 kw)	2007.06-2012.10	AT	Rear	Estate RWD N43B20A	Model year to:2008	Propshaft	PS900125
	2007.06-2012.10		Centre	Estate RWD N43B20A		Center Bearing Support	538672
	2007.06-2012.10		Front	Estate RWD N43B20A	Inner diameter:50mm,510596 and 537625 different structure	Flexible Coupling	510596
	2007.06-2012.10		Front	Estate RWD N43B20A	Inner diameter:38.5mm	Flexible Coupling	510641
	2007.06-2012.10		Front	Estate RWD N43B20A	Inner diameter:50mm,537625 and 510596 different structure	Flexible Coupling	537625
	2007.06-2012.10		Front	Estate RWD N43B20A		Flexible Coupling Kit	510596S
	2007.06-2012.10		Front	Estate RWD N43B20A		Flexible Coupling Kit	510641S
2.0 (135 kw)	2012.11-2015.06	AT	Rear	Estate RWD N20B20B		Propshaft	PS901432
	2012.11-2015.06		Centre	Estate RWD N20B20B		Center Bearing Support	538672
	2012.11-2015.06		Front	Estate RWD N20B20B		Flexible Coupling	510596
	2012.11-2015.06		Front	Estate RWD N20B20B		Flexible Coupling	510597
	2012.11-2015.06		Front	Estate RWD N20B20B		Flexible Coupling	537625
	2012.11-2015.06		Front	Estate RWD N20B20B	Inner diameter:50mm,510596S and 537625S different structure	Flexible Coupling Kit	510596S
	2012.11-2015.06		Front	Estate RWD N20B20B	Inner diameter:38.5mm	Flexible Coupling Kit	510597S
	2012.11-2015.06		Front	Estate RWD N20B20B	Inner diameter:50mm,537625S and 510596S different structure	Flexible Coupling Kit	537625S
	2015.07-2019.06		Centre	Estate RWD B48B20A		Center Bearing Support	538672
	2015.07-2019.06		Front	Estate RWD B48B20A		Flexible Coupling	510596
	2015.07-2019.06		Front	Estate RWD B48B20A		Flexible Coupling	537625
	2015.07-2019.06		Front	Estate RWD B48B20A		Flexible Coupling Kit	510596S
	2015.07-2019.06		Front	Estate RWD B48B20A		Flexible Coupling Kit	537625S
	2019.11-		Centre	Estate RWD B46B20B/B48B20A		Center Bearing Support	538640
	2019.11-		Front	Estate RWD B46B20B/B48B20A		Flexible Coupling	510596
2.2 (120 kw)	2000.09-2005.02	AT	Rear	Estate RWD M54B226S1		Propshaft	PS901435
	2000.09-2005.02	MT	Rear	Estate RWD M54B226S1		Propshaft	PS900114
	2000.09-2005.02		Front	Estate RWD M54B226S1		Flexible Coupling	510596
2.2 (125 kw)	2000.08-2005.02	AT	Rear	Estate RWD M54B226S1		Propshaft	PS901435
	2000.08-2005.02	MT	Rear	Estate RWD M54B226S1		Propshaft	PS900114
	2000.08-2005.02		Centre	Estate RWD M54B226S1		Center Bearing Support	538653
	2000.08-2005.02		Front	Estate RWD M54B226S1	Inner diameter:50mm,510596 and 537625 different structure	Flexible Coupling	510596
	2000.08-2005.02		Front	Estate RWD M54B226S1	Inner diameter:38mm	Flexible Coupling	510597
	2000.08-2005.02		Front	Estate RWD M54B226S1	Inner diameter:50mm,537625 and 510596 different structure	Flexible Coupling	537625
	2000.08-2005.02		Front	Estate RWD M54B226S1		Flexible Coupling Kit	510596S
	2000.08-2005.02		Front	Estate RWD M54B226S1		Flexible Coupling Kit	510597S
320i xDrive							
2.0 (135 kw)	2012.07-2018.10	AT/MT	Front	Saloon 4WD N20B20A/N20B20B	Date from:2013.01	Propshaft	PS900112
	2012.07-2018.10	AT	Rear	Saloon 4WD N20B20A/N20B20B	Date to:2015.07	Propshaft	PS901433
	2012.07-2018.10		Centre	Saloon 4WD N20B20A/N20B20B		Center Bearing Support	538672
	2012.07-2018.10		Front	Saloon 4WD N20B20A/N20B20B		Flexible Coupling	537625
	2012.07-2018.10		Front;Rear	Saloon 4WD N20B20A/N20B20B		Flexible Coupling	517955
	2012.07-2018.10		Front	Saloon 4WD N20B20A/N20B20B		Flexible Coupling Kit	537625S
	2012.07-2018.10		Front;Rear	Saloon 4WD N20B20A/N20B20B		Flexible Coupling Kit	517955S
	2015.07-2018.10		Centre	Saloon 4WD B48B20A		Center Bearing Support	538672
	2015.07-2018.10		Front	Saloon 4WD B48B20A		Flexible Coupling	510596
	2015.07-2018.10		Front	Saloon 4WD B48B20A		Flexible Coupling	537625
	2015.07-2018.10		Front	Saloon 4WD B48B20A	510596S and 537625S different structure	Flexible Coupling Kit	510596S
	2015.07-2018.10		Front	Saloon 4WD B48B20A	537625S and 510596S different structure	Flexible Coupling Kit	537625S
	2019.07-		Centre	Saloon 4WD B48B20A		Center Bearing Support	538640
	2019.07-		Front	Saloon 4WD B48B20A		Flexible Coupling	537631

	YEAR	TRANSM.	FITTING POSITION	BODY STYLE & DRIVE TYPE & ENGINE	REMARKS	PRODUCT	GSP Ref.
BMW							
320i xDrive Gran Turismo							
2.0 (120 kw)	2013.07-2016.06		Front	Hatchback 4WD N20B20A		Flexible Coupling	537625
	2013.07-2016.06		Front;Rear	Hatchback 4WD N20B20A		Flexible Coupling	517955
	2013.07-2016.06		Front	Hatchback 4WD N20B20A	510596S and 537625S different structure	Flexible Coupling Kit	510596S
	2013.07-2016.06		Front	Hatchback 4WD N20B20A	537625S and 510596S different structure	Flexible Coupling Kit	537625S
	2013.07-2016.06		Front;Rear	Hatchback 4WD N20B20A		Flexible Coupling Kit	517955S
	2016.07-		Front	Hatchback 4WD B48B20A		Flexible Coupling	510596
2.0 (135 kw)	2013.07-2016.06		Centre	Hatchback 4WD N20B20B		Center Bearing Support	538672
	2013.07-2016.06		Front	Hatchback 4WD N20B20B		Flexible Coupling	537625
	2013.07-2016.06		Front;Rear	Hatchback 4WD N20B20B		Flexible Coupling	517955
	2013.07-2016.06		Front	Hatchback 4WD N20B20B	510596S and 537625S different structure	Flexible Coupling Kit	510596S
	2013.07-2016.06		Front	Hatchback 4WD N20B20B	537625S and 510596S different structure	Flexible Coupling Kit	537625S
	2013.07-2016.06		Front;Rear	Hatchback 4WD N20B20B		Flexible Coupling Kit	517955S
	2016.07-		Front	Hatchback 4WD B48B20A		Flexible Coupling	510596
	2016.07-		Front	Hatchback 4WD B48B20A		Flexible Coupling	537625
	2016.07-		Front	Hatchback 4WD B48B20A		Flexible Coupling Kit	510596S
	2016.07-		Front	Hatchback 4WD B48B20A		Flexible Coupling Kit	537625S
320i xDrive Touring							
2.0 (120 kw)	2013.03-2015.06	AT	Rear	Estate 4WD N20B20B		Propshaft	PS901433
	2013.03-2015.06		Centre	Estate 4WD N20B20B		Center Bearing Support	538672
	2013.03-2015.06		Front	Estate 4WD N20B20B		Flexible Coupling	537625
	2013.03-2015.06		Front;Rear	Estate 4WD N20B20B		Flexible Coupling	517955
	2013.03-2015.06		Front	Estate 4WD N20B20B		Flexible Coupling Kit	537625S
	2013.03-2015.06		Front;Rear	Estate 4WD N20B20B		Flexible Coupling Kit	517955S
2.0 (135 kw)	2013.03-2015.06	AT	Rear	Estate 4WD N20B20B		Propshaft	PS901433
	2013.03-2015.06		Centre	Estate 4WD N20B20B		Center Bearing Support	538672
	2013.03-2015.06		Front	Estate 4WD N20B20B		Flexible Coupling	537625
	2013.03-2015.06		Front;Rear	Estate 4WD N20B20B		Flexible Coupling	517955
	2013.03-2015.06		Front	Estate 4WD N20B20B		Flexible Coupling Kit	537625S
	2013.03-2015.06		Front;Rear	Estate 4WD N20B20B		Flexible Coupling Kit	517955S
	2015.07-2019.06		Centre	Estate 4WD B48B20A		Center Bearing Support	538672
	2015.07-2019.06		Front	Estate 4WD B48B20A		Flexible Coupling	510596
	2015.07-2019.06		Front	Estate 4WD B48B20A		Flexible Coupling	537625
	2015.07-2019.06		Front;Rear	Estate 4WD B48B20A		Flexible Coupling	517955
	2015.07-2019.06		Front	Estate 4WD B48B20A	510596S and 537625S different structure	Flexible Coupling Kit	510596S
	2015.07-2019.06		Front	Estate 4WD B48B20A	537625S and 510596S different structure	Flexible Coupling Kit	537625S
323i							
2.5 (120 kw)	1998.03-2000.09	MT	Rear	Saloon RWD M52B256S4	Total Length:1554mm	Propshaft	PS900114
	1998.03-2000.09		Front	Saloon RWD M52B256S4		Flexible Coupling	510596
2.5 (125 kw)	1995.05-1998.11	AT/MT	Rear	Saloon RWD M52B256S3		Propshaft	PS901492
	1995.05-1998.11		Centre	Saloon RWD M52B256S3	Installation size:160mm	Center Bearing Support	538661
	1995.05-1998.11		Centre	Saloon RWD M52B256S3	Installation size:130.6mm	Center Bearing Support	538677
	1995.05-1998.11		Front	Saloon RWD M52B256S3	Inner diameter:50mm,510596 and 537625 different structure	Flexible Coupling	510596
	1995.05-1998.11		Front	Saloon RWD M52B256S3	Inner diameter:38mm	Flexible Coupling	510597
	1995.05-1998.11		Front	Saloon RWD M52B256S3	Inner diameter:50mm,537625 and 510596 different structure	Flexible Coupling	537625
	1995.05-1998.11		Front	Saloon RWD M52B256S3		Flexible Coupling Kit	510596S
	1995.05-1998.11		Front	Saloon RWD M52B256S3		Flexible Coupling Kit	510597S
	1998.03-2000.09	AT	Rear	Saloon RWD M52B256S4		Propshaft	PS900113
	1998.03-2000.09	MT	Rear	Saloon RWD M52B256S4		Propshaft	PS900114
	1998.03-2000.09		Centre	Saloon RWD M52B256S4		Center Bearing Support	538653
	1998.03-2000.09		Front	Saloon RWD M52B256S4	Inner diameter:50mm,510596 and 537625 different structure	Flexible Coupling	510596
	1998.03-2000.09		Front	Saloon RWD M52B256S4	Inner diameter:38mm	Flexible Coupling	510597
	1998.03-2000.09		Front	Saloon RWD M52B256S4	Inner diameter:50mm,537625 and 510596 different structure	Flexible Coupling	537625
	1998.03-2000.09		Front	Saloon RWD M52B256S4		Flexible Coupling Kit	510596S
	1998.03-2000.09		Front	Saloon RWD M52B256S4		Flexible Coupling Kit	510597S
2.5 (130 kw)	2005.03-2007.03	AT	Rear	Saloon RWD N52B25A/N52B25B/N52B25BE/N52B25BF		Propshaft	PS901495
	2005.03-2007.03		Centre	Saloon RWD N52B25A/N52B25B/N52B25BE/N52B25BF		Center Bearing Support	538672
	2005.03-2007.03		Front	Saloon RWD N52B25A/N52B25B/N52B25BE/N52B25BF	510596 and 537625 different structure	Flexible Coupling	510596
	2005.03-2007.03		Front	Saloon RWD N52B25A/N52B25B/N52B25BE/N52B25BF	537625 and 510596 different structure	Flexible Coupling	537625
	2005.03-2007.03		Front	Saloon RWD N52B25A/N52B25B/N52B25BE/N52B25BF		Flexible Coupling Kit	510596S
2.5 (140 kw)	2006.09-2011.12	AT	Rear	Saloon RWD N52B25A/N52B25BF		Propshaft	PS901495
	2006.09-2011.12		Centre	Saloon RWD N52B25A/N52B25BF		Center Bearing Support	538672
	2006.09-2011.12		Front	Saloon RWD N52B25A/N52B25BF		Flexible Coupling	510596
	2006.09-2011.12		Front	Saloon RWD N52B25A/N52B25BF		Flexible Coupling	517956
	2006.09-2011.12		Front	Saloon RWD N52B25A/N52B25BF		Flexible Coupling Kit	510596S

	YEAR	TRANSM.	FITTING POSITION	BODY STYLE & DRIVE TYPE & ENGINE	REMARKS	PRODUCT	GSP Ref.
BMW							
323i Cabrio							
2.5 (120 kw)	2000.04-2000.09	MT	Rear	Cabriolet RWD M52B256S4		Propshaft	PS900114
	2000.04-2000.09		Front	Cabriolet RWD M52B256S4		Flexible Coupling	510596
2.5 (125 kw)	1995.05-1999.11	AT/MT	Rear	Cabriolet RWD M52B256S3		Propshaft	PS901492
	1995.05-1999.11		Centre	Cabriolet RWD M52B256S3	Installation size:160mm	Center Bearing Support	538661
	1995.05-1999.11		Centre	Cabriolet RWD M52B256S3	Installation size:130.6mm	Center Bearing Support	538677
	1995.05-1999.11		Front	Cabriolet RWD M52B256S3	Inner diameter:50mm,510596 and 537625 different structure	Flexible Coupling	510596
	1995.05-1999.11		Front	Cabriolet RWD M52B256S3	Inner diameter:38mm	Flexible Coupling	510597
	1995.05-1999.11		Front	Cabriolet RWD M52B256S3	Inner diameter:50mm,537625 and 510596 different structure	Flexible Coupling	537625
	1995.05-1999.11		Front	Cabriolet RWD M52B256S3	AT	Flexible Coupling Kit	510596S
	1995.05-1999.11		Front	Cabriolet RWD M52B256S3	MT	Flexible Coupling Kit	510597S
	1998.01-2000.09	AT	Rear	Cabriolet RWD M52B256S4		Propshaft	PS900113
	1998.01-2000.09	MT	Rear	Cabriolet RWD M52B256S4		Propshaft	PS900114
	1998.01-2000.09		Centre	Cabriolet RWD M52B256S4		Center Bearing Support	538653
	1998.01-2000.09		Front	Cabriolet RWD M52B256S4	Inner diameter:50mm,510596 and 537625 different structure	Flexible Coupling	510596
	1998.01-2000.09		Front	Cabriolet RWD M52B256S4	Inner diameter:38mm	Flexible Coupling	510597
	1998.01-2000.09		Front	Cabriolet RWD M52B256S4	Inner diameter:50mm,537625 and 510596 different structure	Flexible Coupling	537625
	1998.01-2000.09		Front	Cabriolet RWD M52B256S4		Flexible Coupling Kit	510596S
	1998.01-2000.09		Front	Cabriolet RWD M52B256S4		Flexible Coupling Kit	510597S
2.5 (130 kw)	2007.03-2011.09	AT	Rear	Convertible RWD N52 B25 A		Propshaft	PS901495
	2007.03-2011.09		Centre	Convertible RWD N52 B25 A		Center Bearing Support	538672
	2007.03-2011.09		Front	Convertible RWD N52 B25 A		Flexible Coupling Kit	510596S
2.5 (140 kw)	2010.03-2011.09	AT	Rear	Cabriolet RWD N52B25A		Propshaft	PS901495
	2010.03-2011.09		Centre	Cabriolet RWD N52B25A		Center Bearing Support	538672
	2010.03-2011.09		Front	Cabriolet RWD N52B25A		Flexible Coupling	510596
323i Compact							
2.5 (120 kw)	1999.01-2000.08		Front	Hatchback RWD M52B256S3		Flexible Coupling	510597
2.5 (125 kw)	1997.09-2000.08		Centre	Hatchback RWD M52B256S3	Installation size:160mm	Center Bearing Support	538661
	1997.09-2000.08		Centre	Hatchback RWD M52B256S3	Installation size:130.6mm	Center Bearing Support	538677
	1997.09-2000.08		Front	Hatchback RWD M52B256S3	Inner diameter:50mm,510596 and 537625 different structure	Flexible Coupling	510596
	1997.09-2000.08		Front	Hatchback RWD M52B256S3	Inner diameter:38mm	Flexible Coupling	510597
	1997.09-2000.08		Front	Hatchback RWD M52B256S3	Inner diameter:50mm,537625 and 510596 different structure	Flexible Coupling	537625
	1997.09-2000.08		Front	Hatchback RWD M52B256S3		Flexible Coupling Kit	510596S
	1997.09-2000.08		Front	Hatchback RWD M52B256S3		Flexible Coupling Kit	510597S
323i Coupe							
2.5 (120 kw)	1999.04-2000.09	MT	Rear	Coupe RWD M52B256S4		Propshaft	PS900114
	1999.04-2000.09		Front	Coupe RWD M52B256S4		Flexible Coupling	510596
2.5 (125 kw)	1995.05-1999.05	AT/MT	Rear	Coupe RWD M52B256S3		Propshaft	PS901492
	1995.05-1999.05		Centre	Coupe RWD M52B256S3	Installation size:160mm	Center Bearing Support	538661
	1995.05-1999.05		Centre	Coupe RWD M52B256S3	Installation size:130.6mm	Center Bearing Support	538677
	1995.05-1999.05		Front	Coupe RWD M52B256S3	Inner diameter:50mm,510596 and 537625 different structure	Flexible Coupling	510596
	1995.05-1999.05		Front	Coupe RWD M52B256S3	Inner diameter:38mm	Flexible Coupling	510597
	1995.05-1999.05		Front	Coupe RWD M52B256S3	Inner diameter:50mm,537625 and 510596 different structure	Flexible Coupling	537625
	1995.05-1999.05		Front	Coupe RWD M52B256S3	AT	Flexible Coupling Kit	510596S
	1995.05-1999.05		Front	Coupe RWD M52B256S3	MT	Flexible Coupling Kit	510597S
	1999.06-2000.09	AT	Rear	Coupe RWD M52B256S4		Propshaft	PS900113
	1999.06-2000.09	MT	Rear	Coupe RWD M52B256S4		Propshaft	PS900114
	1999.06-2000.09		Centre	Coupe RWD M52B256S4		Center Bearing Support	538653
	1999.06-2000.09		Front	Coupe RWD M52B256S4	Inner diameter:50mm,510596 and 537625 different structure	Flexible Coupling	510596
	1999.06-2000.09		Front	Coupe RWD M52B256S4	Inner diameter:38mm	Flexible Coupling	510597
	1999.06-2000.09		Front	Coupe RWD M52B256S4	Inner diameter:50mm,537625 and 510596 different structure	Flexible Coupling	537625
	1999.06-2000.09		Front	Coupe RWD M52B256S4		Flexible Coupling Kit	510596S
	1999.06-2000.09		Front	Coupe RWD M52B256S4		Flexible Coupling Kit	510597S
2.5 (127 kw)	1999.04-2000.12		Front	Coupe RWD M52 B25 (256S4)		Flexible Coupling Kit	510597S
2.5 (130 kw)	2006.06-2008.08	AT	Rear	Coupe RWD N52 B25 A		Propshaft	PS901495
	2006.06-2008.08		Centre	Coupe RWD N52 B25 A		Center Bearing Support	538672
	2006.06-2008.08		Front	Coupe RWD N52 B25 A		Flexible Coupling Kit	510596S
2.5 (140 kw)	2008.03-2011.12	AT	Rear	Coupe RWD N52B25A		Propshaft	PS901495
	2008.03-2011.12		Centre	Coupe RWD N52B25A		Center Bearing Support	538672
	2008.03-2011.12		Front	Coupe RWD N52B25A		Flexible Coupling	510596
323i Touring							
2.5 (125 kw)	1995.12-1999.04		Centre	Estate RWD M52B256S3	Installation size:160mm	Center Bearing Support	538661
	1995.12-1999.04		Centre	Estate RWD M52B256S3	Installation size:130.6mm	Center Bearing Support	538677
	1995.12-1999.04		Front	Estate RWD M52B256S3	510596 and 537625 different structure	Flexible Coupling	510596
	1995.12-1999.04		Front	Estate RWD M52B256S3	537625 and 510596 different structure	Flexible Coupling	537625

	YEAR	TRANSM.	FITTING POSITION	BODY STYLE & DRIVE TYPE & ENGINE	REMARKS	PRODUCT	GSP Ref.
BMW							
323i Touring							
2.5 (125 kw)	1995.12-1999.04		Front	Estate RWD M52B256S3		Flexible Coupling Kit	510596S
2.5 (130 kw)	2006.04-2007.06	AT	Rear	Estate RWD N52B25A		Propshaft	PS901495
	2006.04-2007.06		Centre	Estate RWD N52B25A		Center Bearing Support	538672
	2006.04-2007.06		Front	Estate RWD N52B25A		Flexible Coupling	510596
	2006.04-2007.06		Rear	Estate RWD N52B25A		Flexible Coupling	533878
	2006.04-2007.06		Front	Estate RWD N52B25A		Flexible Coupling Kit	510596S
2.5 (140 kw)	2006.04-2008.07	AT	Rear	Estate RWD N52B25A		Propshaft	PS901495
	2006.04-2008.07		Centre	Estate RWD N52B25A		Center Bearing Support	538672
	2006.04-2008.07		Front	Estate RWD N52B25A		Flexible Coupling	510596
325d							
2.0 (155 kw)	2013.03-2016.02		Centre	Saloon RWD N47D20D		Center Bearing Support	538664
	2013.03-2016.02		Front;Rear	Saloon RWD N47D20D		Flexible Coupling	517955
	2013.03-2016.02		Front;Rear	Saloon RWD N47D20D		Flexible Coupling Kit	517955S
2.0 (160 kw)	2013.03-2016.02		Centre	Saloon RWD N47D20D		Center Bearing Support	538664
	2013.03-2016.02		Front;Rear	Saloon RWD N47D20D		Flexible Coupling	517955
	2013.03-2016.02		Front	Saloon RWD N47D20D		Flexible Coupling Kit	537669S
	2013.03-2016.02		Front;Rear	Saloon RWD N47D20D		Flexible Coupling Kit	517955S
2.0 (165 kw)	2016.03-2018.02		Centre	Saloon RWD B47D20B		Center Bearing Support	538664
	2016.03-2018.02		Front;Rear	Saloon RWD B47D20B		Flexible Coupling	517955
	2016.03-2018.02		Front;Rear	Saloon RWD B47D20B		Flexible Coupling Kit	517955S
2.5 (85 kw)	1991.09-1998.02		Centre	Saloon RWD M51D256T1		Center Bearing Support	538661
	1991.09-1998.02		Front	Saloon RWD M51D256T1	Inner diameter:50mm,510596 and 537625 different structure	Flexible Coupling	510596
	1991.09-1998.02		Front	Saloon RWD M51D256T1	Inner diameter:38mm	Flexible Coupling	510597
	1991.09-1998.02		Front	Saloon RWD M51D256T1	Inner diameter:50mm,537625 and 510596 different structure	Flexible Coupling	537625
	1991.09-1998.02		Front	Saloon RWD M51D256T1		Flexible Coupling Kit	510596S
	1991.09-1998.02		Front	Saloon RWD M51D256T1		Flexible Coupling Kit	510597S
2.5 (105 kw)	1993.03-1998.01		Centre	Saloon RWD M51D256T1	Installation size:160mm	Center Bearing Support	538661
	1993.03-1998.01		Centre	Saloon RWD M51D256T1	Installation size:130.6mm	Center Bearing Support	538677
	1993.03-1998.01		Front	Saloon RWD M51D256T1	510596 and 537625 different structure	Flexible Coupling	510596
	1993.03-1998.01		Front	Saloon RWD M51D256T1	537625 and 510596 different structure	Flexible Coupling	537625
	1993.03-1998.01		Front	Saloon RWD M51D256T1		Flexible Coupling Kit	510596S
3.0 (145 kw)	2006.09-2010.02		Centre	Saloon RWD M57D306D3		Center Bearing Support	538664
	2006.09-2010.02		Centre	Saloon RWD M57D306D3		Center Bearing Support	538672
	2006.09-2010.02		Front	Saloon RWD M57D306D3	Inner diameter:44mm,530160 and 530758 different structure	Flexible Coupling	530160
	2006.09-2010.02		Front	Saloon RWD M57D306D3	Inner diameter:43.5mm,530758 and 530160 different structure	Flexible Coupling	530758
	2006.09-2010.02		Front	Saloon RWD M57D306D3	Inner diameter:55mm	Flexible Coupling	537669
	2006.09-2010.02		Front;Rear	Saloon RWD M57D306D3		Flexible Coupling	517955
	2006.09-2010.02		Front	Saloon RWD M57D306D3	Inner diameter:43.5mm	Flexible Coupling Kit	530758S
	2006.09-2010.02		Front	Saloon RWD M57D306D3	Inner diameter:55mm	Flexible Coupling Kit	537669S
	2006.09-2010.02		Front;Rear	Saloon RWD M57D306D3		Flexible Coupling Kit	517955S
3.0 (150 kw)	2010.03-2011.10		Centre	Saloon RWD N57D30A		Center Bearing Support	538664
	2010.03-2011.10		Front	Saloon RWD N57D30A		Flexible Coupling	530758
	2010.03-2011.10		Front	Saloon RWD N57D30A		Flexible Coupling	537669
	2010.03-2011.10		Front;Rear	Saloon RWD N57D30A		Flexible Coupling	517955
	2010.03-2011.10		Front	Saloon RWD N57D30A		Flexible Coupling Kit	537669S
	2010.03-2011.10		Front;Rear	Saloon RWD N57D30A		Flexible Coupling Kit	517955S
325d Cabrio							
3.0 (145 kw)	2007.07-2010.02		Centre	Cabriolet RWD M57D306D3		Center Bearing Support	538664
	2007.07-2010.02		Front	Cabriolet RWD M57D306D3	Inner diameter:44mm,530160 and 530758 different structure	Flexible Coupling	530160
	2007.07-2010.02		Front	Cabriolet RWD M57D306D3	Inner diameter:43.5mm,530758 and 530160 different structure	Flexible Coupling	530758
	2007.07-2010.02		Front	Cabriolet RWD M57D306D3	Inner diameter:55mm	Flexible Coupling	537669
	2007.07-2010.02		Front;Rear	Cabriolet RWD M57D306D3		Flexible Coupling	517955
	2007.07-2010.02		Front	Cabriolet RWD M57D306D3	Inner diameter:43.5mm	Flexible Coupling Kit	530758S
	2007.07-2010.02		Front	Cabriolet RWD M57D306D3	Inner diameter:55mm	Flexible Coupling Kit	537669S
	2007.07-2010.02		Front;Rear	Cabriolet RWD M57D306D3		Flexible Coupling Kit	517955S
3.0 (150 kw)	2010.03-2013.09		Centre	Cabriolet RWD N57D30A		Center Bearing Support	538664
	2010.03-2013.09		Front	Cabriolet RWD N57D30A		Flexible Coupling	530758
	2010.03-2013.09		Front	Cabriolet RWD N57D30A		Flexible Coupling	537669
	2010.03-2013.09		Front;Rear	Cabriolet RWD N57D30A		Flexible Coupling	517955
	2010.03-2013.09		Front	Cabriolet RWD N57D30A		Flexible Coupling Kit	537669S
	2010.03-2013.09		Front;Rear	Cabriolet RWD N57D30A		Flexible Coupling Kit	517955S
3.0 (155 kw)	2007.01-2009.12		Centre	Cabriolet RWD M57D306D3		Center Bearing Support	538664
	2007.01-2009.12		Front;Rear	Cabriolet RWD M57D306D3		Flexible Coupling	517955
	2007.01-2009.12		Front	Cabriolet RWD M57D306D3		Flexible Coupling Kit	537669S

	YEAR	TRANSM.	FITTING POSITION	BODY STYLE & DRIVE TYPE & ENGINE	REMARKS	PRODUCT	GSP Ref.
BMW							
325d Cabrio							
3.0 (155 kw)	2007.01-2009.12		Front;Rear	Cabriolet RWD M57D306D3		Flexible Coupling Kit	517955S
325d Coupe							
3.0 (145 kw)	2006.09-2010.03		Centre	Coupe RWD M57D306D3		Center Bearing Support	538664
	2006.09-2010.03		Front	Coupe RWD M57D306D3	Inner diameter:44mm,530160 and 530758 different structure	Flexible Coupling	530160
	2006.09-2010.03		Front	Coupe RWD M57D306D3	Inner diameter:43.5mm,530758 and 530160 different structure	Flexible Coupling	530758
	2006.09-2010.03		Front	Coupe RWD M57D306D3	Inner diameter:55mm	Flexible Coupling	537669
	2006.09-2010.03		Front;Rear	Coupe RWD M57D306D3		Flexible Coupling	517955
	2006.09-2010.03		Front	Coupe RWD M57D306D3	Inner diameter:43.5mm	Flexible Coupling Kit	530758S
	2006.09-2010.03		Front	Coupe RWD M57D306D3	Inner diameter:55mm	Flexible Coupling Kit	537669S
	2006.09-2010.03		Front;Rear	Coupe RWD M57D306D3		Flexible Coupling Kit	517955S
3.0 (150 kw)	2010.04-2013.06		Centre	Coupe RWD N57D30A		Center Bearing Support	538664
	2010.04-2013.06		Front	Coupe RWD N57D30A	Inner diameter:44mm,530160 and 530758 different structure	Flexible Coupling	530160
	2010.04-2013.06		Front	Coupe RWD N57D30A	Inner diameter:43.5mm,530758 and 530160 different structure	Flexible Coupling	530758
	2010.04-2013.06		Front	Coupe RWD N57D30A	Inner diameter:55mm	Flexible Coupling	537669
	2010.04-2013.06		Front;Rear	Coupe RWD N57D30A		Flexible Coupling	517955
	2010.04-2013.06		Front	Coupe RWD N57D30A	Inner diameter:55mm	Flexible Coupling Kit	537669S
	2010.04-2013.06		Front;Rear	Coupe RWD N57D30A		Flexible Coupling Kit	517955S
325d Gran Turismo							
2.0 (155 kw)	2013.07-2016.06		Front;Rear	Hatchback RWD N47D20D		Flexible Coupling	517955
	2013.07-2016.06		Front;Rear	Hatchback RWD N47D20D		Flexible Coupling Kit	517955S
2.0 (160 kw)	2013.07-2016.06		Front;Rear	Hatchback RWD N47D20D		Flexible Coupling	517955
	2013.07-2016.06		Front;Rear	Hatchback RWD N47D20D		Flexible Coupling Kit	517955S
2.0 (165 kw)	2016.07-2018.02		Front;Rear	Hatchback RWD B47D20B		Flexible Coupling	517955
	2016.07-2018.02		Front;Rear	Hatchback RWD B47D20B		Flexible Coupling Kit	517955S
325d Touring							
2.0 (155 kw)	2013.03-2016.02		Centre	Estate RWD N47D20D		Center Bearing Support	538664
	2013.03-2016.02		Front;Rear	Estate RWD N47D20D		Flexible Coupling	517955
	2013.03-2016.02		Front;Rear	Estate RWD N47D20D		Flexible Coupling Kit	517955S
2.0 (160 kw)	2013.03-2016.02		Centre	Estate RWD N47D20D		Center Bearing Support	538664
	2013.03-2016.02		Front;Rear	Estate RWD N47D20D		Flexible Coupling	517955
	2013.03-2016.02		Front	Estate RWD N47D20D		Flexible Coupling Kit	537669S
	2013.03-2016.02		Front;Rear	Estate RWD N47D20D		Flexible Coupling Kit	517955S
2.0 (165 kw)	2016.03-2018.02		Centre	Estate RWD B47D20B		Center Bearing Support	538664
	2016.03-2018.02		Front;Rear	Estate RWD B47D20B		Flexible Coupling	517955
	2016.03-2018.02		Front;Rear	Estate RWD B47D20B		Flexible Coupling Kit	517955S
2.5 (105 kw)	1995.03-1999.04		Centre	Estate RWD M51D256T1	Installation size:160mm	Center Bearing Support	538661
	1995.03-1999.04		Centre	Estate RWD M51D256T1	Installation size:130.6mm	Center Bearing Support	538677
	1995.03-1999.04		Front	Estate RWD M51D256T1	510596 and 537625 different structure	Flexible Coupling	510596
	1995.03-1999.04		Front	Estate RWD M51D256T1	537625 and 510596 different structure	Flexible Coupling	537625
	1995.03-1999.04		Front	Estate RWD M51D256T1		Flexible Coupling Kit	510596S
3.0 (145 kw)	2006.09-2012.06		Centre	Estate RWD M57D306D3		Center Bearing Support	538664
	2006.09-2012.06		Centre	Estate RWD M57D306D3		Center Bearing Support	538672
	2006.09-2012.06		Front	Estate RWD M57D306D3	Inner diameter:44mm,530160 and 530758 different structure	Flexible Coupling	530160
	2006.09-2012.06		Front	Estate RWD M57D306D3	Inner diameter:43.5mm,530758 and 530160 different structure	Flexible Coupling	530758
	2006.09-2012.06		Front	Estate RWD M57D306D3	Inner diameter:55mm	Flexible Coupling	537669
	2006.09-2012.06		Front;Rear	Estate RWD M57D306D3		Flexible Coupling	517955
	2006.09-2012.06		Front	Estate RWD M57D306D3	Inner diameter:43.5mm	Flexible Coupling Kit	530758S
	2006.09-2012.06		Front	Estate RWD M57D306D3	Inner diameter:55mm	Flexible Coupling Kit	537669S
	2006.09-2012.06		Front;Rear	Estate RWD M57D306D3		Flexible Coupling Kit	517955S
3.0 (150 kw)	2010.04-2012.10		Centre	Estate RWD N57D30A		Center Bearing Support	538664
	2010.04-2012.10		Centre	Estate RWD N57D30A		Center Bearing Support	538672
	2010.04-2012.10		Front	Estate RWD N57D30A	Inner diameter:44mm,530160 and 530758 different structure	Flexible Coupling	530160
	2010.04-2012.10		Front	Estate RWD N57D30A	Inner diameter:43.5mm,530758 and 530160 different structure	Flexible Coupling	530758
	2010.04-2012.10		Front	Estate RWD N57D30A	Inner diameter:55mm	Flexible Coupling	537669
	2010.04-2012.10		Front;Rear	Estate RWD N57D30A		Flexible Coupling	517955
	2010.04-2012.10		Front	Estate RWD N57D30A	Inner diameter:55mm	Flexible Coupling Kit	537669S
	2010.04-2012.10		Front;Rear	Estate RWD N57D30A		Flexible Coupling Kit	517955S
325i							
2.5 (125 kw)	1985.07-1990.12	5AT/5MT	Rear	Saloon RWD M20B256K1		Propshaft	PS901491
2.5 (126 kw)	1983.09-1989.11	5AT/5MT	Rear	Saloon RWD M20B256E1/M20B256E2		Propshaft	PS901491
2.5 (137 kw)	2000.09-2005.04	AT	Rear	Saloon RWD M54 B25 (256S5)		Propshaft	PS900115
	2000.09-2005.04	MT	Rear	Saloon RWD M54 B25 (256S5)	Date from:2001.09,Date to:2003.03	Propshaft	PS901637
2.5 (141 kw)	1990.09-1995.07	AT/MT	Rear	Saloon RWD M50B256S1/M50B256S2		Propshaft	PS901492
	1990.09-1995.07		Centre	Saloon RWD M50B256S1/M50B256S2	Installation size:160mm	Center Bearing Support	538661

	YEAR	TRANSM.	FITTING POSITION	BODY STYLE & DRIVE TYPE & ENGINE	REMARKS	PRODUCT	GSP Ref.
BMW							
325i							
2.5 (141 kw)	1990.09-1995.07		Centre	Saloon RWD M50B256S1/M50B256S2	Installation size:130.6mm	Center Bearing Support	538677
	1990.09-1995.07		Front	Saloon RWD M50B256S1/M50B256S2	Inner diameter:50mm,510596 and 537625 different structure	Flexible Coupling	510596
	1990.09-1995.07		Front	Saloon RWD M50B256S1/M50B256S2	Inner diameter:38mm	Flexible Coupling	510597
	1990.09-1995.07		Front	Saloon RWD M50B256S1/M50B256S2	Inner diameter:50mm,537625 and 510596 different structure	Flexible Coupling	537625
	1990.09-1995.07		Front	Saloon RWD M50B256S1/M50B256S2		Flexible Coupling Kit	510596S
	1990.09-1995.07		Front	Saloon RWD M50B256S1/M50B256S2		Flexible Coupling Kit	510597S
	2000.09-2005.02	AT	Front	Saloon 4WD M54B256S5		Propshaft	PS900122
	2000.09-2005.02	AT	Rear	Saloon RWD M54B256S5	Date from:2001.03	Propshaft	PS900113
	2000.09-2005.02	AT	Rear	Saloon RWD M54B256S5	Date to:2001.02	Propshaft	PS900115
	2000.09-2005.02	MT	Rear	Saloon RWD M54B256S5	for OE No.:26111229557	Propshaft	PS900114
	2000.09-2005.02	MT	Rear	Saloon RWD M54B256S5	Date from:2001.09,Date to:2003.03;for OE No.:26111229560	Propshaft	PS901637
	2000.09-2005.02		Centre	Saloon RWD M54B256S5		Center Bearing Support	538653
	2000.09-2005.02		Centre	Saloon 4WD M54B256S5		Center Bearing Support	538665
	2000.09-2005.02		Front	Saloon RWD M54B256S5	Inner diameter:50mm,510596 and 537625 different structure	Flexible Coupling	510596
	2000.09-2005.02		Front	Saloon RWD M54B256S5	Inner diameter:38mm	Flexible Coupling	510597
	2000.09-2005.02		Front	Saloon 4WD M54B256S5	Inner diameter:50mm	Flexible Coupling	537625
	2000.09-2005.02		Front	Saloon RWD M54B256S5	Inner diameter:50mm,537625 and 510596 different structure	Flexible Coupling	537625
	2000.09-2005.02		Front	Saloon 4WD M54B256S5	Inner diameter:48.5mm	Flexible Coupling	537631
	2000.09-2005.02		Front	Saloon RWD M54B256S5		Flexible Coupling Kit	510596S
	2000.09-2005.02		Front	Saloon RWD M54B256S5		Flexible Coupling Kit	510597S
	2000.09-2005.02		Front	Saloon 4WD M54B256S5		Flexible Coupling Kit	537631S
2.5 (155 kw)	2006.01-2007.06	AT	Rear	Saloon RWD N52B25A		Propshaft	PS900117
	2006.01-2007.06	MT	Rear	Saloon RWD N52B25A		Propshaft	PS901640
	2006.01-2007.06		Centre	Saloon RWD N52B25A		Center Bearing Support	538672
	2006.01-2007.06		Front	Saloon RWD N52B25A		Flexible Coupling	510596
2.5 (160 kw)	2004.12-2011.12	AT	Rear	Saloon RWD N52B25A/N52B25B/N52B25BF	Date from:2005.01	Propshaft	PS900117
	2004.12-2011.12	MT	Rear	Saloon RWD N52B25A/N52B25B/N52B25BF		Propshaft	PS901640
	2004.12-2011.12		Centre	Saloon RWD N52B25A/N52B25B/N52B25BF		Center Bearing Support	538672
	2004.12-2011.12		Front	Saloon RWD N52B25A/N52B25B/N52B25BF	510596 and 537625 different structure	Flexible Coupling	510596
	2004.12-2011.12		Front	Saloon RWD N52B25A/N52B25B/N52B25BF	537625 and 510596 different structure	Flexible Coupling	537625
	2004.12-2011.12		Front	Saloon RWD N52B25A/N52B25B/N52B25BF		Flexible Coupling Kit	510596S
	2005.09-2008.08	MT	Front	Saloon 4WD N52B25A		Propshaft	PS900124
	2005.09-2008.08	AT	Rear	Saloon 4WD N52B25A		Propshaft	PS900123
	2005.09-2008.08		Centre	Saloon 4WD N52B25A		Center Bearing Support	538672
	2005.09-2008.08		Front	Saloon 4WD N52B25A		Flexible Coupling	517956
	2005.09-2008.08		Rear	Saloon 4WD N52B25A		Flexible Coupling	533878
	2005.09-2008.08		Front	Saloon 4WD N52B25A		Flexible Coupling Kit	517956S
	2005.09-2008.08		Rear	Saloon 4WD N52B25A		Flexible Coupling Kit	538112S
3.0 (155 kw)	2006.06-2011.12	AT	Rear	Saloon RWD N53B30A		Propshaft	PS900117
	2006.06-2011.12		Centre	Saloon RWD N53B30A		Center Bearing Support	538672
	2006.06-2011.12		Front	Saloon RWD N53B30A		Flexible Coupling	510596
3.0 (160 kw)	2007.06-2011.12	AT	Rear	Saloon RWD N53B30A		Propshaft	PS900117
	2007.06-2011.12		Centre	Saloon RWD N53B30A		Center Bearing Support	538672
	2007.06-2011.12		Front	Saloon RWD N53B30A	510596 and 537625 different structure	Flexible Coupling	510596
	2007.06-2011.12		Front	Saloon RWD N53B30A	537625 and 510596 different structure	Flexible Coupling	537625
	2007.06-2011.12		Front	Saloon RWD N53B30A		Flexible Coupling Kit	510596S
	2007.09-2008.08	MT	Front	Saloon 4WD N53B30A		Propshaft	PS900124
	2007.09-2008.08	AT	Rear	Saloon 4WD N53B30A		Propshaft	PS900123
	2007.09-2008.08		Centre	Saloon 4WD N53B30A		Center Bearing Support	538672
	2007.09-2008.08		Front	Saloon 4WD N53B30A		Flexible Coupling	517956
	2007.09-2008.08		Rear	Saloon 4WD N53B30A		Flexible Coupling	533878
	2007.09-2008.08		Front	Saloon 4WD N53B30A		Flexible Coupling Kit	517956S
	2007.09-2008.08		Rear	Saloon 4WD N53B30A		Flexible Coupling Kit	538112S
325i Cabrio							
2.5 (125 kw)	1986.01-1993.10	5AT/5MT	Rear	Cabriolet RWD M20B256E1/M20B256E2/M20B256EX/M20B256K1		Propshaft	PS901491
2.5 (126 kw)	1985.12-1987.12	5AT/5MT	Rear	Cabriolet RWD M20B256E1/M20B256E2		Propshaft	PS901491
2.5 (141 kw)	1993.03-1995.02	AT/MT	Rear	Cabriolet RWD M50B256S2		Propshaft	PS901492
	1993.03-1995.02		Centre	Cabriolet RWD M50B256S2	Installation size:160mm	Center Bearing Support	538661
	1993.03-1995.02		Centre	Cabriolet RWD M50B256S2	Installation size:130.6mm	Center Bearing Support	538677
	1993.03-1995.02		Front	Cabriolet RWD M50B256S2	Inner diameter:50mm,510596 and 537625 different structure	Flexible Coupling	510596
	1993.03-1995.02		Front	Cabriolet RWD M50B256S2	Inner diameter:38mm	Flexible Coupling	510597
	1993.03-1995.02		Front	Cabriolet RWD M50B256S2	Inner diameter:50mm,537625 and 510596 different structure	Flexible Coupling	537625
	1993.03-1995.02		Front	Cabriolet RWD M50B256S2		Flexible Coupling Kit	510596S
	1993.03-1995.02		Front	Cabriolet RWD M50B256S2		Flexible Coupling Kit	510597S

	YEAR	TRANSM.	FITTING POSITION	BODY STYLE & DRIVE TYPE & ENGINE	REMARKS	PRODUCT	GSP Ref.
BMW							
325i Cabrio							
2.5 (141 kw)	2000.09-2006.08	AT	Rear	Cabriolet RWD M54B256S5	Date from:2005.03	Propshaft	PS900113
	2000.09-2006.08	AT	Rear	Cabriolet RWD M54B256S5	Date to:2005.02	Propshaft	PS900115
	2000.09-2006.08	MT	Rear	Cabriolet RWD M54B256S5		Propshaft	PS900114
	2000.09-2006.08		Centre	Cabriolet RWD M54B256S5		Center Bearing Support	538653
	2000.09-2006.08		Front	Cabriolet RWD M54B256S5	Inner diameter:50mm,510596 and 537625 different structure	Flexible Coupling	510596
	2000.09-2006.08		Front	Cabriolet RWD M54B256S5	Inner diameter:38mm	Flexible Coupling	510597
	2000.09-2006.08		Front	Cabriolet RWD M54B256S5	Inner diameter:50mm,537625 and 510596 different structure	Flexible Coupling	537625
	2000.09-2006.08		Front	Cabriolet RWD M54B256S5		Flexible Coupling Kit	510596S
	2000.09-2006.08		Front	Cabriolet RWD M54B256S5		Flexible Coupling Kit	510597S
2.5 (160 kw)	2006.12-2010.02	AT	Rear	Cabriolet RWD N52B25A		Propshaft	PS900117
	2006.12-2010.02	MT	Rear	Cabriolet RWD N52B25A		Propshaft	PS901640
	2006.12-2010.02		Centre	Cabriolet RWD N52B25A		Center Bearing Support	538672
	2006.12-2010.02		Front	Cabriolet RWD N52B25A	510596 and 537625 different structure	Flexible Coupling	510596
	2006.12-2010.02		Front	Cabriolet RWD N52B25A	537625 and 510596 different structure	Flexible Coupling	537625
	2006.12-2010.02		Front	Cabriolet RWD N52B25A		Flexible Coupling Kit	510596S
3.0 (155 kw)	2006.10-2013.12	AT	Rear	Cabriolet RWD N53B30A		Propshaft	PS900117
	2006.10-2013.12		Centre	Cabriolet RWD N53B30A		Center Bearing Support	538672
	2006.10-2013.12		Front	Cabriolet RWD N53B30A		Flexible Coupling	510596
3.0 (160 kw)	2007.03-2013.12	AT	Rear	Cabriolet RWD N53B30A		Propshaft	PS900117
	2007.03-2013.12		Centre	Cabriolet RWD N53B30A		Center Bearing Support	538672
	2007.03-2013.12		Front	Cabriolet RWD N53B30A	510596 and 537625 different structure	Flexible Coupling	510596
	2007.03-2013.12		Front	Cabriolet RWD N53B30A	537625 and 510596 different structure	Flexible Coupling	537625
	2007.03-2013.12		Front	Cabriolet RWD N53B30A		Flexible Coupling Kit	510596S
325i Compact							
2.5 (141 kw)	2001.04-2004.12	AT	Rear	Hatchback RWD M54B256S5		Propshaft	PS900113
	2001.04-2004.12		Centre	Hatchback RWD M54B256S5		Center Bearing Support	538653
	2001.04-2004.12		Front	Hatchback RWD M54B256S5	Inner diameter:50mm,510596 and 537625 different structure	Flexible Coupling	510596
	2001.04-2004.12		Front	Hatchback RWD M54B256S5	Inner diameter:38mm	Flexible Coupling	510597
	2001.04-2004.12		Front	Hatchback RWD M54B256S5	Inner diameter:50mm,537625 and 510596 different structure	Flexible Coupling	537625
	2001.04-2004.12		Front	Hatchback RWD M54B256S5		Flexible Coupling Kit	510596S
	2001.04-2004.12		Front	Hatchback RWD M54B256S5		Flexible Coupling Kit	510597S
325i Coupe							
2.5 (141 kw)	1991.10-1995.02	AT/MT	Rear	Coupe RWD M50B256S1/M50B256S2		Propshaft	PS901492
	1991.10-1995.02		Centre	Coupe RWD M50B256S1/M50B256S2	Installation size:160mm	Center Bearing Support	538661
	1991.10-1995.02		Centre	Coupe RWD M50B256S1/M50B256S2	Installation size:130.6mm	Center Bearing Support	538677
	1991.10-1995.02		Front	Coupe RWD M50B256S1/M50B256S2	Inner diameter:50mm,510596 and 537625 different structure	Flexible Coupling	510596
	1991.10-1995.02		Front	Coupe RWD M50B256S1/M50B256S2	Inner diameter:38mm	Flexible Coupling	510597
	1991.10-1995.02		Front	Coupe RWD M50B256S1/M50B256S2	Inner diameter:50mm,537625 and 510596 different structure	Flexible Coupling	537625
	1991.10-1995.02		Front	Coupe RWD M50B256S1/M50B256S2		Flexible Coupling Kit	510596S
	1991.10-1995.02		Front	Coupe RWD M50B256S1/M50B256S2		Flexible Coupling Kit	510597S
	2000.09-2006.05	AT	Rear	Coupe RWD M54B256S5	Date from:2005.03	Propshaft	PS900113
	2000.09-2006.05	AT	Rear	Coupe RWD M54B256S5	Date to:2005.02	Propshaft	PS900115
	2000.09-2006.05	MT	Rear	Coupe RWD M54B256S5		Propshaft	PS900114
	2000.09-2006.05		Centre	Coupe RWD M54B256S5		Center Bearing Support	538653
	2000.09-2006.05		Front	Coupe RWD M54B256S5	Inner diameter:50mm,510596 and 537625 different structure	Flexible Coupling	510596
	2000.09-2006.05		Front	Coupe RWD M54B256S5	Inner diameter:38mm	Flexible Coupling	510597
	2000.09-2006.05		Front	Coupe RWD M54B256S5	Inner diameter:50mm,537625 and 510596 different structure	Flexible Coupling	537625
	2000.09-2006.05		Front	Coupe RWD M54B256S5		Flexible Coupling Kit	510596S
	2000.09-2006.05		Front	Coupe RWD M54B256S5		Flexible Coupling Kit	510597S
2.5 (150 kw)	2010.03-2013.10	MT	Rear	Coupe RWD N52B25A/N52B25AF/N52B25BF		Propshaft	PS901640
	2010.03-2013.10		Centre	Coupe RWD N52B25A/N52B25AF/N52B25BF		Center Bearing Support	538672
	2010.03-2013.10		Front	Coupe RWD N52B25A/N52B25AF/N52B25BF		Flexible Coupling	510596
2.5 (155 kw)	2010.03-2013.06	AT	Rear	Coupe RWD N52B25A/N52B25AF/N52B25BF		Propshaft	PS900117
	2010.03-2013.06	MT	Rear	Coupe RWD N52B25A/N52B25AF/N52B25BF		Propshaft	PS901640
	2010.03-2013.06		Centre	Coupe RWD N52B25A/N52B25AF/N52B25BF		Center Bearing Support	538672
	2010.03-2013.06		Front	Coupe RWD N52B25A/N52B25AF/N52B25BF		Flexible Coupling	510596
2.5 (160 kw)	2006.06-2010.02	AT	Rear	Coupe RWD N52B25A/N52B25AF/N52B25BF		Propshaft	PS900117
	2006.06-2010.02	MT	Rear	Coupe RWD N52B25A/N52B25AF/N52B25BF		Propshaft	PS901640
	2006.06-2010.02		Centre	Coupe RWD N52B25A/N52B25AF/N52B25BF		Center Bearing Support	538672
	2006.06-2010.02		Front	Coupe RWD N52B25A/N52B25AF/N52B25BF	510596 and 537625 different structure	Flexible Coupling	510596
	2006.06-2010.02		Front	Coupe RWD N52B25A/N52B25AF/N52B25BF	537625 and 510596 different structure	Flexible Coupling	537625
	2006.06-2010.02		Rear	Coupe RWD N52B25A/N52B25AF/N52B25BF		Flexible Coupling	533878
	2006.06-2010.02		Front	Coupe RWD N52B25A/N52B25AF/N52B25BF		Flexible Coupling Kit	510596S
	2006.09-2010.02	AT/MT	Front	Coupe 4WD N52B25A		Propshaft	PS900124

	YEAR	TRANSM.	FITTING POSITION	BODY STYLE & DRIVE TYPE & ENGINE	REMARKS	PRODUCT	GSP Ref.
BMW							
325i Coupe							
2.5 (160 kw)	2006.09-2010.02	AT	Rear	Coupe 4WD N52B25A		Propshaft	PS900123
	2006.09-2010.02		Centre	Coupe 4WD N52B25A		Center Bearing Support	538672
	2006.09-2010.02		Front	Coupe 4WD N52B25A		Flexible Coupling	517956
	2006.09-2010.02		Rear	Coupe 4WD N52B25A		Flexible Coupling	533878
	2006.09-2010.02		Front	Coupe 4WD N52B25A		Flexible Coupling Kit	517956S
	2006.09-2010.02		Rear	Coupe 4WD N52B25A		Flexible Coupling Kit	538112S
3.0 (155 kw)	2007.09-2008.08	6AT	Front	Coupe 4WD N53B30A		Propshaft	PS900124
	2007.09-2008.08	6AT	Rear	Coupe 4WD N53B30A		Propshaft	PS900123
	2010.03-2013.06	AT	Rear	Coupe RWD N53B30A		Propshaft	PS900117
	2010.03-2013.06		Centre	Coupe RWD N53B30A		Center Bearing Support	538672
	2010.03-2013.06		Front	Coupe RWD N53B30A		Flexible Coupling	510596
3.0 (160 kw)	2007.09-2010.02	AT	Front	Coupe 4WD N53B30A		Propshaft	PS900124
	2007.09-2010.02	AT	Rear	Coupe 4WD N53B30A		Propshaft	PS900123
	2007.09-2010.02		Centre	Coupe 4WD N53B30A		Center Bearing Support	538672
	2007.09-2010.02		Front	Coupe 4WD N53B30A		Flexible Coupling	517956
	2007.09-2010.02		Rear	Coupe 4WD N53B30A		Flexible Coupling	533878
	2007.09-2010.02		Front	Coupe 4WD N53B30A		Flexible Coupling Kit	517956S
	2007.09-2010.02		Rear	Coupe 4WD N53B30A		Flexible Coupling Kit	538112S
	2007.09-2013.06	AT	Rear	Coupe RWD N53B30A		Propshaft	PS900117
	2007.09-2013.06		Centre	Coupe RWD N53B30A		Center Bearing Support	538672
	2007.09-2013.06		Front	Coupe RWD N53B30A	510596 and 537625 different structure	Flexible Coupling	510596
	2007.09-2013.06		Front	Coupe RWD N53B30A	537625 and 510596 different structure	Flexible Coupling	537625
	2007.09-2013.06		Front	Coupe RWD N53B30A		Flexible Coupling Kit	510596S
325i Touring							
2.5 (125 kw)	1986.09-1994.10	5AT/5MT	Rear	Estate RWD M20B256EX/M20B256K1		Propshaft	PS901491
2.5 (141 kw)	2000.08-2005.02	AT	Front	Estate 4WD M54B256S5		Propshaft	PS900122
	2000.08-2005.02	AT	Rear	Estate RWD M54B256S5		Propshaft	PS900113
	2000.08-2005.02	AT	Rear	Estate RWD M54B256S5	Date to:2002.03	Propshaft	PS900115
	2000.08-2005.02	MT	Rear	Estate RWD M54B256S5		Propshaft	PS900114
	2000.08-2005.02		Centre	Estate RWD M54B256S5		Center Bearing Support	538653
	2000.08-2005.02		Centre	Estate 4WD M54B256S5		Center Bearing Support	538665
	2000.08-2005.02		Front	Estate RWD M54B256S5		Flexible Coupling	510596
	2000.08-2005.02		Front	Estate RWD M54B256S5	MT	Flexible Coupling	510597
	2000.08-2005.02		Front	Estate 4WD M54B256S5	Inner diameter:50mm	Flexible Coupling	537625
	2000.08-2005.02		Front	Estate 4WD M54B256S5	Inner diameter:48.5mm	Flexible Coupling	537631
	2000.08-2005.02		Front	Estate RWD M54B256S5		Flexible Coupling Kit	510596S
	2000.08-2005.02		Front	Estate RWD M54B256S5		Flexible Coupling Kit	510597S
	2000.08-2005.02		Front	Estate 4WD M54B256S5		Flexible Coupling Kit	537631S
2.5 (155 kw)	2005.11-2010.12	AT	Rear	Estate RWD N52B25A/N52B25AF	Date from:2005.01	Propshaft	PS900117
	2005.11-2010.12	MT	Rear	Estate RWD N52B25A/N52B25AF		Propshaft	PS901640
	2005.11-2010.12		Centre	Estate RWD N52B25A/N52B25AF		Center Bearing Support	538672
	2005.11-2010.12		Front	Estate RWD N52B25A/N52B25AF		Flexible Coupling	510596
2.5 (160 kw)	2004.12-2008.08	AT	Rear	Estate RWD N52B25A		Propshaft	PS900117
	2004.12-2008.08	MT	Rear	Estate RWD N52B25A		Propshaft	PS901640
	2004.12-2008.08		Centre	Estate RWD N52B25A		Center Bearing Support	538672
	2004.12-2008.08		Front	Estate RWD N52B25A	510596 and 537625 different structure	Flexible Coupling	510596
	2004.12-2008.08		Front	Estate RWD N52B25A	537625 and 510596 different structure	Flexible Coupling	537625
	2004.12-2008.08		Front	Estate RWD N52B25A		Flexible Coupling Kit	510596S
	2005.08-2008.08	AT	Front	Estate 4WD N52B25A		Propshaft	PS900124
	2005.08-2008.08	AT	Rear	Estate 4WD N52B25A		Propshaft	PS900123
	2005.08-2008.08		Centre	Estate 4WD N52B25A		Center Bearing Support	538672
	2005.08-2008.08		Front	Estate 4WD N52B25A		Flexible Coupling	510597
	2005.08-2008.08		Front	Estate 4WD N52B25A		Flexible Coupling	517956
	2005.08-2008.08		Rear	Estate 4WD N52B25A		Flexible Coupling	533878
	2005.08-2008.08		Rear	Estate 4WD N52B25A		Flexible Coupling Kit	538112S
3.0 (155 kw)	2007.06-2012.10	AT	Rear	Estate RWD N53B30A		Propshaft	PS900117
	2007.06-2012.10		Centre	Estate RWD N53B30A		Center Bearing Support	538672
	2007.06-2012.10		Front	Estate RWD N53B30A		Flexible Coupling	510596
	2007.09-2008.08	MT	Front	Estate 4WD N53B30A		Propshaft	PS900124
	2007.09-2008.08	AT	Rear	Estate 4WD N53B30A		Propshaft	PS900123
	2007.09-2008.08		Centre	Estate 4WD N53B30A		Center Bearing Support	538672
	2007.09-2008.08		Rear	Estate 4WD N53B30A		Flexible Coupling	533878
	2007.09-2008.08		Rear	Estate 4WD N53B30A		Flexible Coupling Kit	538112S

	YEAR	TRANSM.	FITTING POSITION	BODY STYLE & DRIVE TYPE & ENGINE	REMARKS	PRODUCT	GSP Ref.
BMW							
325i Touring							
3.0 (160 kw)	2006.01-2008.08	MT	Front	Estate 4WD N53B30A		Propshaft	PS900124
	2006.01-2008.08	AT	Rear	Estate 4WD N53B30A		Propshaft	PS900123
	2006.01-2008.08		Centre	Estate 4WD N53B30A		Center Bearing Support	538672
	2006.01-2008.08		Front	Estate 4WD N53B30A		Flexible Coupling	510597
	2006.01-2008.08		Front	Estate 4WD N53B30A		Flexible Coupling	517956
	2006.01-2008.08		Rear	Estate 4WD N53B30A		Flexible Coupling	533878
	2006.01-2008.08		Front	Estate 4WD N53B30A		Flexible Coupling Kit	517956S
	2006.01-2008.08		Rear	Estate 4WD N53B30A		Flexible Coupling Kit	538112S
	2007.06-2012.10	AT	Rear	Estate RWD N53B30A		Propshaft	PS900117
	2007.06-2012.10		Centre	Estate RWD N53B30A		Center Bearing Support	538672
	2007.06-2012.10		Front	Estate RWD N53B30A	510596 and 537625 different structure	Flexible Coupling	510596
	2007.06-2012.10		Front	Estate RWD N53B30A	537625 and 510596 different structure	Flexible Coupling	537625
	2007.06-2012.10		Front	Estate RWD N53B30A		Flexible Coupling Kit	510596S
325i xDrive							
3.0 (155 kw)	2008.09-2011.10		Rear	Saloon 4WD N53B30A		Flexible Coupling Kit	538112S
3.0 (160 kw)	2008.09-2011.10		Centre	Saloon 4WD N53B30A		Center Bearing Support	538672
	2008.09-2011.10		Rear	Saloon 4WD N53B30A		Flexible Coupling	533878
	2008.09-2011.10		Rear	Saloon 4WD N53B30A		Flexible Coupling Kit	538112S
325i xDrive Coupe							
2.5 (150 kw)	2010.03-2013.06		Centre	Coupe 4WD N52B25A		Center Bearing Support	538672
	2010.03-2013.06		Rear	Coupe 4WD N52B25A		Flexible Coupling	533878
	2010.03-2013.06		Rear	Coupe 4WD N52B25A		Flexible Coupling Kit	538112S
2.5 (155 kw)	2010.03-2013.04		Centre	Coupe 4WD N52B25AF		Center Bearing Support	538672
	2010.03-2013.04		Rear	Coupe 4WD N52B25AF		Flexible Coupling	533878
	2010.03-2013.04		Rear	Coupe 4WD N52B25AF		Flexible Coupling Kit	538112S
2.5 (160 kw)	2006.09-2012.03	AT/MT	Front	Coupe 4WD N52B25A		Propshaft	PS900124
	2006.09-2012.03	AT	Rear	Coupe 4WD N52B25A		Propshaft	PS900123
	2006.09-2012.03		Centre	Coupe 4WD N52B25A		Center Bearing Support	538672
	2006.09-2012.03		Front	Coupe 4WD N52B25A		Flexible Coupling	517956
	2006.09-2012.03		Rear	Coupe 4WD N52B25A		Flexible Coupling	533878
	2006.09-2012.03		Front	Coupe 4WD N52B25A		Flexible Coupling Kit	517956S
	2006.09-2012.03		Rear	Coupe 4WD N52B25A		Flexible Coupling Kit	538112S
3.0 (155 kw)	2008.09-2013.06		Centre	Coupe 4WD N53B30A		Center Bearing Support	538672
	2008.09-2013.06		Rear	Coupe 4WD N53B30A		Flexible Coupling	533878
	2008.09-2013.06		Rear	Coupe 4WD N53B30A		Flexible Coupling Kit	538112S
3.0 (160 kw)	2008.09-2013.12		Centre	Coupe 4WD N53B30A		Center Bearing Support	538672
	2008.09-2013.12		Front	Coupe 4WD N53B30A		Flexible Coupling	517956
	2008.09-2013.12		Rear	Coupe 4WD N53B30A		Flexible Coupling	533878
	2008.09-2013.12		Rear	Coupe 4WD N53B30A		Flexible Coupling Kit	538112S
325i xDrive Touring							
2.5 (160 kw)	2004.06-2008.08	AT/MT	Front	Estate 4WD N52B25A		Propshaft	PS900124
	2004.06-2008.08	AT	Rear	Estate 4WD N52B25A		Propshaft	PS900123
	2004.06-2008.08		Centre	Estate 4WD N52B25A		Center Bearing Support	538672
	2004.06-2008.08		Front	Estate 4WD N52B25A		Flexible Coupling	510597
	2004.06-2008.08		Front	Estate 4WD N52B25A		Flexible Coupling	517956
	2004.06-2008.08		Rear	Estate 4WD N52B25A		Flexible Coupling	533878
	2004.06-2008.08		Rear	Estate 4WD N52B25A		Flexible Coupling Kit	538112S
3.0 (155 kw)	2008.09-2012.06	AT	Rear	Estate 4WD N53B30A		Propshaft	PS900117
	2008.09-2012.06		Centre	Estate 4WD N53B30A		Center Bearing Support	538672
	2008.09-2012.06		Rear	Estate 4WD N53B30A		Flexible Coupling	533878
	2008.09-2012.06		Rear	Estate 4WD N53B30A		Flexible Coupling Kit	538112S
3.0 (160 kw)	2008.09-2012.10		Centre	Estate 4WD N53B30A		Center Bearing Support	538672
	2008.09-2012.10		Front	Estate 4WD N53B30A		Flexible Coupling	517956
	2008.09-2012.10		Rear	Estate 4WD N53B30A		Flexible Coupling	533878
	2008.09-2012.10		Rear	Estate 4WD N53B30A		Flexible Coupling Kit	538112S
325is							
2.5 (141 kw)	1991.10-1995.08		Front	Coupe RWD M50B25(256S1)/M50B25(256S2)		Flexible Coupling	510597
325xi							
2.5 (137 kw)	2000.09-2005.04	AT	Front	Saloon 4WD M54B25(256S5)		Propshaft	PS900122
325xi Touring							
2.5 (137 kw)	2000.09-2005.02	AT	Front	Estate 4WD M54B25(256S5)		Propshaft	PS900122
328i							
2.0 (180 kw)	2011.11-2018.10	AT	Rear	Saloon RWD N20B20A/N26B20A	Model year to:2015	Propshaft	PS900126
	2011.11-2018.10		Centre	Saloon RWD N20B20A/N26B20A		Center Bearing Support	538672

	YEAR	TRANSM.	FITTING POSITION	BODY STYLE & DRIVE TYPE & ENGINE	REMARKS	PRODUCT	GSP Ref.
BMW							
328i							
2.0 (180 kw)	2011.11-2018.10		Front	Saloon RWD N20B20A/N26B20A		Flexible Coupling	510596
	2011.11-2018.10		Front	Saloon RWD N20B20A/N26B20A		Flexible Coupling	537625
	2011.11-2018.10		Front	Saloon RWD N20B20A/N26B20A		Flexible Coupling Kit	510596S
	2011.11-2018.10		Front	Saloon RWD N20B20A/N26B20A		Flexible Coupling Kit	537625S
2.8 (142 kw)	1995.01-1998.04	AT/MT	Rear	Saloon RWD M52B286S1		Propshaft	PS901492
	1995.01-1998.04		Centre	Saloon RWD M52B286S1	Installation size:160mm	Center Bearing Support	538661
	1995.01-1998.04		Centre	Saloon RWD M52B286S1	Installation size:130.6mm	Center Bearing Support	538677
	1995.01-1998.04		Front	Saloon RWD M52B286S1	510596 and 537625 different structure	Flexible Coupling	510596
	1995.01-1998.04		Front	Saloon RWD M52B286S1	537625 and 510596 different structure	Flexible Coupling	537625
	1995.01-1998.04		Front	Saloon RWD M52B286S1		Flexible Coupling Kit	510596S
	1997.12-2000.05	AT	Rear	Saloon RWD M52B286S2		Propshaft	PS900113
	1997.12-2000.05	MT	Rear	Saloon RWD M52B286S2		Propshaft	PS901637
	1997.12-2000.05		Centre	Saloon RWD M52B286S2		Center Bearing Support	538653
	1997.12-2000.05		Front	Saloon RWD M52B286S2	510596 and 537625 different structure	Flexible Coupling	510596
	1997.12-2000.05		Front	Saloon RWD M52B286S2	537625 and 510596 different structure	Flexible Coupling	537625
	1997.12-2000.05		Front	Saloon RWD M52B286S2		Flexible Coupling Kit	510596S
2.8 (144 kw)	1998.09-2000.12	MT	Rear	Saloon RWD M52B28(286S2)		Propshaft	PS901637
3.0 (172 kw)	2006.09-2011.12	AT	Rear	Saloon RWD N51B30A		Propshaft	PS900117
	2006.09-2011.12		Centre	Saloon RWD N51B30A		Center Bearing Support	538672
	2006.09-2011.12		Front	Saloon RWD N51B30A		Flexible Coupling	510596
	2006.09-2011.12		Front	Saloon RWD N51B30A		Flexible Coupling Kit	510596S
328i Cabrio							
2.8 (142 kw)	1995.01-1999.11	AT/MT	Rear	Cabriolet RWD M52B286S1		Propshaft	PS901492
	1995.01-1999.11		Centre	Cabriolet RWD M52B286S1	Installation size:160mm	Center Bearing Support	538661
	1995.01-1999.11		Centre	Cabriolet RWD M52B286S1	Installation size:130.6mm	Center Bearing Support	538677
	1995.01-1999.11		Front	Cabriolet RWD M52B286S1	510596 and 537625 different structure	Flexible Coupling	510596
	1995.01-1999.11		Front	Cabriolet RWD M52B286S1	537625 and 510596 different structure	Flexible Coupling	537625
	1995.01-1999.11		Front	Cabriolet RWD M52B286S1		Flexible Coupling Kit	510596S
3.0 (172 kw)	2007.03-2013.10		Centre	Convertible RWD N51 B30 A		Center Bearing Support	538672
	2007.03-2013.10		Front	Convertible RWD N51 B30 A		Flexible Coupling Kit	510596S
328i Coupe							
2.8 (142 kw)	1995.01-1999.04	AT/MT	Rear	Coupe RWD M52B286S1		Propshaft	PS901492
	1995.01-1999.04		Centre	Coupe RWD M52B286S1	Installation size:160mm	Center Bearing Support	538661
	1995.01-1999.04		Centre	Coupe RWD M52B286S1	Installation size:130.6mm	Center Bearing Support	538677
	1995.01-1999.04		Front	Coupe RWD M52B286S1	510596 and 537625 different structure	Flexible Coupling	510596
	1995.01-1999.04		Front	Coupe RWD M52B286S1	537625 and 510596 different structure	Flexible Coupling	537625
	1995.01-1999.04		Front	Coupe RWD M52B286S1		Flexible Coupling Kit	510596S
	1998.12-2000.05	AT	Rear	Coupe RWD M52B286S2		Propshaft	PS900113
	1998.12-2000.05		Centre	Coupe RWD M52B286S2		Center Bearing Support	538653
	1998.12-2000.05		Front	Coupe RWD M52B286S2	510596 and 537625 different structure	Flexible Coupling	510596
	1998.12-2000.05		Front	Coupe RWD M52B286S2	537625 and 510596 different structure	Flexible Coupling	537625
	1998.12-2000.05		Front	Coupe RWD M52B286S2		Flexible Coupling Kit	510596S
3.0 (172 kw)	2006.06-2013.06		Centre	Coupe RWD N52B30A		Center Bearing Support	538672
	2006.06-2013.06		Front	Coupe RWD N52B30A		Flexible Coupling	510596
	2006.09-2008.08	AT	Front	Coupe 4WD N51B30A/N52B30A		Propshaft	PS900124
	2006.09-2008.08	AT	Rear	Coupe 4WD N51B30A/N52B30A		Propshaft	PS900123
	2006.09-2008.08		Rear	Coupe 4WD N51B30A/N52B30A	Engine Code:N51 B30 A	Flexible Coupling Kit	538112S
328i Gran Turismo							
2.0 (180 kw)	2013.03-2016.06	AT	Rear	Hatchback RWD N20B20A		Propshaft	PS901498
	2013.03-2016.06		Centre	Hatchback RWD N20B20A		Center Bearing Support	538672
	2013.03-2016.06		Front	Hatchback RWD N20B20A		Flexible Coupling	510596
	2013.03-2016.06		Front	Hatchback RWD N20B20A		Flexible Coupling	537625
	2013.03-2016.06		Front	Hatchback RWD N20B20A		Flexible Coupling Kit	510596S
	2013.03-2016.06		Front	Hatchback RWD N20B20A		Flexible Coupling Kit	537625S
328i Touring							
2.0 (180 kw)	2012.07-2015.06	AT	Rear	Estate RWD N20B20A		Propshaft	PS900126
	2012.07-2015.06		Centre	Estate RWD N20B20A		Center Bearing Support	538672
	2012.07-2015.06		Front	Estate RWD N20B20A		Flexible Coupling	510596
	2012.07-2015.06		Front	Estate RWD N20B20A		Flexible Coupling	537625
	2012.07-2015.06		Front	Estate RWD N20B20A		Flexible Coupling Kit	510596S
	2012.07-2015.06		Front	Estate RWD N20B20A		Flexible Coupling Kit	537625S
2.8 (142 kw)	1995.02-1999.04		Centre	Estate RWD M52B286S1	Installation size:160mm	Center Bearing Support	538661
	1995.02-1999.04		Centre	Estate RWD M52B286S1	Installation size:130.6mm	Center Bearing Support	538677
	1995.02-1999.04		Front	Estate RWD M52B286S1	510596 and 537625 different structure	Flexible Coupling	510596

	YEAR	TRANSM.	FITTING POSITION	BODY STYLE & DRIVE TYPE & ENGINE	REMARKS	PRODUCT	GSP Ref.
BMW							
328i Touring							
2.8 (142 kw)	1995.02-1999.04		Front	Estate RWD M52B286S1	537625 and 510596 different structure	Flexible Coupling	537625
	1995.02-1999.04		Front	Estate RWD M52B286S1		Flexible Coupling Kit	510596S
	1999.06-2000.05	AT	Rear	Estate RWD M52B286S2		Propshaft	PS900113
	1999.06-2000.05		Centre	Estate RWD M52B286S2		Center Bearing Support	538653
	1999.06-2000.05		Front	Estate RWD M52B286S2	510596 and 537625 different structure	Flexible Coupling	510596
	1999.06-2000.05		Front	Estate RWD M52B286S2	537625 and 510596 different structure	Flexible Coupling	537625
	1999.06-2000.05		Front	Estate RWD M52B286S2		Flexible Coupling Kit	510596S
328i xDrive							
2.0 (179 kw)	2012.07-2016.07	AT	Rear	Saloon 4WD N20 B20 A, N26 B20 A (07.12-.)	Date to:2015.07	Propshaft	PS901433
	2012.07-2016.07		Front	Saloon 4WD N20 B20 A, N26 B20 A (07.12-.)		Flexible Coupling Kit	537625S
	2012.07-2016.07		Front;Rear	Saloon 4WD N20 B20 A, N26 B20 A (07.12-.)		Flexible Coupling Kit	517955S
2.0 (180 kw)	2012.07-2016.08	AT/MT	Front	Saloon 4WD N20B20A	Date from:2013.01	Propshaft	PS900112
	2012.07-2016.08	AT	Rear	Saloon 4WD N20B20A	Date to:2015.07	Propshaft	PS901433
	2012.07-2016.08		Centre	Saloon 4WD N20B20A		Center Bearing Support	538672
	2012.07-2016.08		Front	Saloon 4WD N20B20A		Flexible Coupling	537625
	2012.07-2016.08		Front;Rear	Saloon 4WD N20B20A		Flexible Coupling	517955
	2012.07-2016.08		Front	Saloon 4WD N20B20A	510596S and 537625S different structure	Flexible Coupling Kit	510596S
	2012.07-2016.08		Front	Saloon 4WD N20B20A	537625S and 510596S different structure	Flexible Coupling Kit	537625S
	2012.07-2016.08		Front;Rear	Saloon 4WD N20B20A		Flexible Coupling Kit	517955S
3.0 (172 kw)	2008.09-2010.12	AT	Front	Saloon 4WD N51 B30 A, N52 B30 A		Propshaft	PS900124
	2008.09-2010.12	AT	Rear	Saloon 4WD N51 B30 A, N52 B30 A		Propshaft	PS900123
	2008.09-2010.12		Rear	Saloon 4WD N51 B30 A, N52 B30 A		Flexible Coupling Kit	538112S
328i xDrive Coupe							
3.0 (172 kw)	2008.09-2013.06		Rear	Coupe 4WD N51B30A/N52B30A		Flexible Coupling Kit	538112S
328i xDrive Gran Turismo							
2.0 (180 kw)	2013.07-2016.06		Centre	Hatchback 4WD N20B20A		Center Bearing Support	538672
	2013.07-2016.06		Front	Hatchback 4WD N20B20A		Flexible Coupling	510596
	2013.07-2016.06		Front	Hatchback 4WD N20B20A		Flexible Coupling	537625
	2013.07-2016.06		Front;Rear	Hatchback 4WD N20B20A		Flexible Coupling	517955
	2013.07-2016.06		Front	Hatchback 4WD N20B20A	510596S and 537625S different structure	Flexible Coupling Kit	510596S
	2013.07-2016.06		Front	Hatchback 4WD N20B20A	537625S and 510596S different structure	Flexible Coupling Kit	537625S
	2013.07-2016.06		Front;Rear	Hatchback 4WD N20B20A		Flexible Coupling Kit	517955S
328i xDrive Touring							
2.0 (180 kw)	2013.03-2015.06		Centre	Estate 4WD N20B20A		Center Bearing Support	538672
	2013.03-2015.06		Front	Estate 4WD N20B20A		Flexible Coupling	537625
	2013.03-2015.06		Front;Rear	Estate 4WD N20B20A		Flexible Coupling	517955
	2013.03-2015.06		Front	Estate 4WD N20B20A	510596S and 537625S different structure	Flexible Coupling Kit	510596S
	2013.03-2015.06		Front	Estate 4WD N20B20A	537625S and 510596S different structure	Flexible Coupling Kit	537625S
	2013.03-2015.06		Front;Rear	Estate 4WD N20B20A		Flexible Coupling Kit	517955S
328i xi							
3.0 (172 kw)	2006.09-2008.12		Rear	Saloon 4WD N51 B30 A, N52 B30 A		Flexible Coupling Kit	538112S
328xi Touring							
3.0 (171 kw)	2006.09-2008.12		Rear	Estate 4WD N51 B30 A		Flexible Coupling Kit	538112S
330Ci							
3.0 (168 kw)	2000.06-2006.12	AT	Rear	Convertible RWD M54B30(306S3)	Date from:2005.03,Date to:2006.08	Propshaft	PS901849
	2000.06-2006.12	MT	Rear	Convertible RWD M54B30(306S3)	Date to:2003.03	Propshaft	PS901948
330Ci Coupe							
3.0 (168 kw)	2000.06-2006.07	AT	Rear	Coupe RWD M54B30(306S3)	Date from:2005.03,Date to:2006.08	Propshaft	PS901849
	2000.06-2006.07	MT	Rear	Coupe RWD M54B30(306S3)	Date to:2003.03	Propshaft	PS901948
330d							
3.0 (135 kw)	1999.08-2003.02	AT	Front	Saloon 4WD M57D306D1		Propshaft	PS900122
	1999.08-2003.02	AT	Rear	Saloon 4WD M57D306D1		Propshaft	PS901434
	1999.08-2003.02		Centre	Saloon RWD M57D306D1		Center Bearing Support	538651
	1999.08-2003.02		Centre	Saloon 4WD M57D306D1		Center Bearing Support	538665
	1999.08-2003.02		Front	Saloon RWD M57D306D1		Flexible Coupling	510663
	1999.08-2003.02		Front	Saloon RWD M57D306D1		Flexible Coupling	530160
	1999.08-2003.02		Front	Saloon 4WD M57D306D1	Inner diameter:50mm	Flexible Coupling	537625
	1999.08-2003.02		Front	Saloon 4WD M57D306D1	Inner diameter:48.5mm	Flexible Coupling	537631
	1999.08-2003.02		Front	Saloon RWD M57D306D1		Flexible Coupling Kit	530160S
	1999.08-2003.02		Front	Saloon 4WD M57D306D1		Flexible Coupling Kit	537631S
3.0 (150 kw)	2002.09-2004.12	AT	Front	Saloon 4WD M57D306D2		Propshaft	PS900122
	2002.09-2004.12	AT	Rear	Saloon 4WD M57D306D2		Propshaft	PS901434
	2002.09-2004.12		Centre	Saloon 4WD M57D306D2		Center Bearing Support	538665
	2002.09-2004.12		Front	Saloon 4WD M57D306D2	Inner diameter:50mm	Flexible Coupling	537625

	YEAR	TRANSM.	FITTING POSITION	BODY STYLE & DRIVE TYPE & ENGINE	REMARKS	PRODUCT	GSP Ref.
BMW							
330d							
3.0 (150 kw)	2002.09-2004.12		Front	Saloon 4WD M57D306D2	Inner diameter:48.5mm	Flexible Coupling	537631
	2002.09-2004.12		Front	Saloon 4WD M57D306D2		Flexible Coupling Kit	537631S
	2003.03-2005.02		Centre	Saloon RWD M57D306D2		Center Bearing Support	538651
	2003.03-2005.02		Front	Saloon RWD M57D306D2		Flexible Coupling	510663
	2003.03-2005.02		Front	Saloon RWD M57D306D2		Flexible Coupling	530160
	2003.03-2005.02		Front	Saloon RWD M57D306D2	MT	Flexible Coupling Kit	530160S
3.0 (155 kw)	2004.09-2011.12		Centre	Saloon RWD M57D306D3/N57D30A		Center Bearing Support	538664
	2004.09-2011.12		Front	Saloon RWD M57D306D3/N57D30A		Flexible Coupling	530160
	2004.09-2011.12		Front;Rear	Saloon RWD M57D306D3/N57D30A		Flexible Coupling	517955
	2004.09-2011.12		Front;Rear	Saloon RWD M57D306D3/N57D30A		Flexible Coupling Kit	517955S
3.0 (170 kw)	2005.03-2008.08	MT	Front	Saloon 4WD M57D306D3		Propshaft	PS900124
	2005.03-2008.08		Centre	Saloon 4WD M57D306D3		Center Bearing Support	538664
	2005.03-2008.08		Centre	Saloon RWD M57D306D3		Center Bearing Support	538664
	2005.03-2008.08		Centre	Saloon 4WD M57D306D3		Center Bearing Support	538672
	2005.03-2008.08		Front	Saloon 4WD M57D306D3		Flexible Coupling	517956
	2005.03-2008.08		Front	Saloon RWD M57D306D3	Inner diameter:57.5mm	Flexible Coupling	517956
	2005.03-2008.08		Front	Saloon RWD M57D306D3	Inner diameter:44mm	Flexible Coupling	530160
	2005.03-2008.08		Front	Saloon RWD M57D306D3	Inner diameter:43.5mm	Flexible Coupling	530758
	2005.03-2008.08		Front	Saloon RWD M57D306D3	Inner diameter:55mm	Flexible Coupling	537669
	2005.03-2008.08		Rear	Saloon 4WD M57D306D3		Flexible Coupling	533878
	2005.03-2008.08		Front;Rear	Saloon 4WD M57D306D3		Flexible Coupling	517955
	2005.03-2008.08		Front;Rear	Saloon RWD M57D306D3		Flexible Coupling	517955
	2005.03-2008.08		Front	Saloon 4WD M57D306D3	Inner diameter:56.5mm	Flexible Coupling Kit	517956S
	2005.03-2008.08		Front	Saloon RWD M57D306D3	AT	Flexible Coupling Kit	517956S
	2005.03-2008.08		Front	Saloon RWD M57D306D3	Inner diameter:43.5mm	Flexible Coupling Kit	530758S
	2005.03-2008.08		Front	Saloon 4WD M57D306D3	Inner diameter:55mm	Flexible Coupling Kit	537669S
	2005.03-2008.08		Front	Saloon RWD M57D306D3	Inner diameter:55mm	Flexible Coupling Kit	537669S
3.0 (180 kw)	2008.09-2011.10		Centre	Saloon RWD N57D30A		Center Bearing Support	538664
	2008.09-2011.10		Front	Saloon RWD N57D30A	Inner diameter:44mm,530160 and 530758 different structure	Flexible Coupling	530160
	2008.09-2011.10		Front	Saloon RWD N57D30A	Inner diameter:43.5mm,530758 and 530160 different structure	Flexible Coupling	530758
	2008.09-2011.10		Front	Saloon RWD N57D30A	Inner diameter:55mm	Flexible Coupling	537669
	2008.09-2011.10		Front;Rear	Saloon RWD N57D30A		Flexible Coupling	517955
	2008.09-2011.10		Front	Saloon RWD N57D30A	Inner diameter:55mm	Flexible Coupling Kit	537669S
	2008.09-2011.10		Front;Rear	Saloon RWD N57D30A		Flexible Coupling Kit	517955S
3.0 (190 kw)	2012.07-2018.10	AT	Rear	Saloon RWD N57D30A		Propshaft	PS901497
	2012.07-2018.10		Centre	Saloon RWD N57D30A		Center Bearing Support	538672
	2012.07-2018.10		Front;Rear	Saloon RWD N57D30A		Flexible Coupling	517955
	2012.07-2018.10		Front	Saloon RWD N57D30A		Flexible Coupling Kit	537669S
	2012.07-2018.10		Front;Rear	Saloon RWD N57D30A		Flexible Coupling Kit	517955S
3.0 (195 kw)	2019.03-		Front;Rear	Saloon RWD B57D30A		Flexible Coupling	517955
	2019.03-		Front;Rear	Saloon RWD B57D30A		Flexible Coupling Kit	517955S
3.0 (210 kw)	2012.07-2018.10	AT	Rear	Saloon RWD N57D30A		Propshaft	PS901497
	2012.07-2018.10		Front;Rear	Saloon RWD N57D30A		Flexible Coupling	517955
	2012.07-2018.10		Front;Rear	Saloon RWD N57D30A		Flexible Coupling Kit	517955S
330d Cabrio							
3.0 (150 kw)	2004.10-2007.02		Centre	Cabriolet RWD M57D306D2		Center Bearing Support	538651
	2004.10-2007.02		Front	Cabriolet RWD M57D306D2	Inner diameter:53mm	Flexible Coupling	510663
	2004.10-2007.02		Front	Cabriolet RWD M57D306D2	Inner diameter:44mm	Flexible Coupling	530160
	2004.10-2007.02		Front	Cabriolet RWD M57D306D2		Flexible Coupling Kit	530160S
3.0 (170 kw)	2007.03-2013.12		Centre	Cabriolet RWD M57D306D3		Center Bearing Support	538664
	2007.03-2013.12		Front	Cabriolet RWD M57D306D3	Inner diameter:57.5mm	Flexible Coupling	517956
	2007.03-2013.12		Front	Cabriolet RWD M57D306D3	Inner diameter:44mm,530160 and 530758 different structure	Flexible Coupling	530160
	2007.03-2013.12		Front	Cabriolet RWD M57D306D3	Inner diameter:43.5mm,530758 and 530160 different structure	Flexible Coupling	530758
	2007.03-2013.12		Front	Cabriolet RWD M57D306D3	Inner diameter:55mm	Flexible Coupling	537669
	2007.03-2013.12		Front;Rear	Cabriolet RWD M57D306D3		Flexible Coupling	517955
	2007.03-2013.12		Front	Cabriolet RWD M57D306D3	Inner diameter:43.5mm	Flexible Coupling Kit	530758S
	2007.03-2013.12		Front	Cabriolet RWD M57D306D3	Inner diameter:55mm	Flexible Coupling Kit	537669S
3.0 (180 kw)	2009.01-2013.09		Centre	Cabriolet RWD N57D30A		Center Bearing Support	538664
	2009.01-2013.09		Front	Cabriolet RWD N57D30A	Inner diameter:44mm,530160 and 530758 different structure	Flexible Coupling	530160
	2009.01-2013.09		Front	Cabriolet RWD N57D30A	Inner diameter:43.5mm,530758 and 530160 different structure	Flexible Coupling	530758
	2009.01-2013.09		Front	Cabriolet RWD N57D30A	Inner diameter:55mm	Flexible Coupling	537669
	2009.01-2013.09		Front;Rear	Cabriolet RWD N57D30A		Flexible Coupling	517955
	2009.01-2013.09		Front	Cabriolet RWD N57D30A	Inner diameter:55mm	Flexible Coupling Kit	537669S
	2009.01-2013.09		Front;Rear	Cabriolet RWD N57D30A		Flexible Coupling Kit	517955S

	YEAR	TRANSM.	FITTING POSITION	BODY STYLE & DRIVE TYPE & ENGINE	REMARKS	PRODUCT	GSP Ref.
BMW							
330d Coupe							
3.0 (150 kw)	2003.02-2006.07		Centre	Coupe RWD M57D306D2		Center Bearing Support	538651
	2003.02-2006.07		Front	Coupe RWD M57D306D2		Flexible Coupling	510663
	2003.02-2006.07		Front	Coupe RWD M57D306D2		Flexible Coupling	530160
	2003.02-2006.07		Front	Coupe RWD M57D306D2	MT	Flexible Coupling Kit	530160S
3.0 (155 kw)	2007.01-2009.12		Centre	Coupe RWD M57D306D3		Center Bearing Support	538664
	2007.01-2009.12		Front;Rear	Coupe RWD M57D306D3		Flexible Coupling	517955
	2007.01-2009.12		Front	Coupe RWD M57D306D3		Flexible Coupling Kit	537669S
	2007.01-2009.12		Front;Rear	Coupe RWD M57D306D3		Flexible Coupling Kit	517955S
3.0 (170 kw)	2006.06-2008.08	AT	Front	Coupe 4WD M57D306D3		Propshaft	PS900124
	2006.06-2008.08		Centre	Coupe 4WD M57D306D3		Center Bearing Support	538664
	2006.06-2008.08		Centre	Coupe 4WD M57D306D3		Center Bearing Support	538672
	2006.06-2008.08		Front	Coupe 4WD M57D306D3	AT;MT	Flexible Coupling	517956
	2006.06-2008.08		Front	Coupe 4WD M57D306D3	MT	Flexible Coupling	537669
	2006.06-2008.08		Front;Rear	Coupe 4WD M57D306D3		Flexible Coupling	517955
	2006.06-2008.08		Front	Coupe 4WD M57D306D3		Flexible Coupling Kit	517956S
	2006.09-2008.08		Centre	Coupe RWD M57D306D3		Center Bearing Support	538664
	2006.09-2008.08		Front	Coupe RWD M57D306D3	Inner diameter:57.5mm	Flexible Coupling	517956
	2006.09-2008.08		Front	Coupe RWD M57D306D3	Inner diameter:44mm	Flexible Coupling	530160
	2006.09-2008.08		Front	Coupe RWD M57D306D3	Inner diameter:43.5mm	Flexible Coupling	530758
	2006.09-2008.08		Front	Coupe RWD M57D306D3	Inner diameter:55mm	Flexible Coupling	537669
	2006.09-2008.08		Front;Rear	Coupe RWD M57D306D3		Flexible Coupling	517955
	2006.09-2008.08		Front	Coupe RWD M57D306D3	Inner diameter:43.5mm	Flexible Coupling Kit	530758S
	2006.09-2008.08		Front	Coupe RWD M57D306D3	Inner diameter:55mm	Flexible Coupling Kit	537669S
3.0 (180 kw)	2008.09-2013.06		Centre	Coupe RWD N57D30A		Center Bearing Support	538664
	2008.09-2013.06		Front	Coupe RWD N57D30A	Inner diameter:44mm,530160 and 530758 different structure	Flexible Coupling	530160
	2008.09-2013.06		Front	Coupe RWD N57D30A	Inner diameter:43.5mm,530758 and 530160 different structure	Flexible Coupling	530758
	2008.09-2013.06		Front	Coupe RWD N57D30A	Inner diameter:55mm	Flexible Coupling	537669
	2008.09-2013.06		Front;Rear	Coupe RWD N57D30A		Flexible Coupling	517955
	2008.09-2013.06		Front	Coupe RWD N57D30A	AT	Flexible Coupling Kit	517956S
	2008.09-2013.06		Front	Coupe RWD N57D30A	MT,Inner diameter:55mm	Flexible Coupling Kit	537669S
	2008.09-2013.06		Front;Rear	Coupe RWD N57D30A		Flexible Coupling Kit	517955S
330d Gran Turismo							
3.0 (190 kw)	2014.03-		Front;Rear	Hatchback RWD N57D30A		Flexible Coupling	517955
	2014.03-		Front;Rear	Hatchback RWD N57D30A		Flexible Coupling Kit	517955S
3.0 (210 kw)	2014.03-		Front;Rear	Hatchback RWD N57D30A		Flexible Coupling	517955
	2014.03-		Front;Rear	Hatchback RWD N57D30A		Flexible Coupling Kit	517955S
330d Touring							
3.0 (135 kw)	1999.08-2003.02		Centre	Estate RWD M57D306D1		Center Bearing Support	538651
	1999.08-2003.02		Front	Estate RWD M57D306D1		Flexible Coupling	510663
	1999.08-2003.02		Front	Estate RWD M57D306D1		Flexible Coupling	530160
	1999.08-2003.02		Front	Estate RWD M57D306D1		Flexible Coupling Kit	530160S
	2000.08-2003.02	AT	Front	Estate 4WD M57D306D1		Propshaft	PS900122
	2000.08-2003.02	AT	Rear	Estate 4WD M57D306D1		Propshaft	PS901434
	2000.08-2003.02		Centre	Estate 4WD M57D306D1		Center Bearing Support	538665
	2000.08-2003.02		Front	Estate 4WD M57D306D1	Inner diameter:50mm	Flexible Coupling	537625
	2000.08-2003.02		Front	Estate 4WD M57D306D1	Inner diameter:48.5mm	Flexible Coupling	537631
	2000.08-2003.02		Front	Estate 4WD M57D306D1		Flexible Coupling Kit	537631S
3.0 (150 kw)	2002.08-2005.05	AT	Front	Estate 4WD M57D306D2		Propshaft	PS900122
	2002.08-2005.05	MT	Rear	Estate 4WD M57D306D2		Propshaft	PS901434
	2002.08-2005.05		Centre	Estate 4WD M57D306D2		Center Bearing Support	538665
	2002.08-2005.05		Front	Estate 4WD M57D306D2	Inner diameter:50mm	Flexible Coupling	537625
	2002.08-2005.05		Front	Estate 4WD M57D306D2	Inner diameter:48.5mm	Flexible Coupling	537631
	2002.08-2005.05		Front	Estate 4WD M57D306D2		Flexible Coupling Kit	537631S
	2003.03-2005.02		Centre	Estate RWD M57D306D2		Center Bearing Support	538651
	2003.03-2005.02		Front	Estate RWD M57D306D2		Flexible Coupling	510663
	2003.03-2005.02		Front	Estate RWD M57D306D2		Flexible Coupling	530160
	2003.03-2005.02		Front	Estate RWD M57D306D2	MT	Flexible Coupling Kit	530160S
3.0 (155 kw)	2005.06-2012.05		Centre	Estate RWD M57D306D3/N57D30A		Center Bearing Support	538664
	2005.06-2012.05		Front;Rear	Estate RWD M57D306D3/N57D30A		Flexible Coupling	517955
	2005.06-2012.05		Front	Estate RWD M57D306D3/N57D30A		Flexible Coupling Kit	537669S
	2005.06-2012.05		Front;Rear	Estate RWD M57D306D3/N57D30A		Flexible Coupling Kit	517955S
3.0 (170 kw)	2005.06-2008.08	MT	Front	Estate 4WD M57D306D3	Model year to:2008	Propshaft	PS900124
	2005.06-2008.08		Centre	Estate 4WD M57D306D3		Center Bearing Support	538664
	2005.06-2008.08		Centre	Estate RWD M57D306D3		Center Bearing Support	538664

	YEAR	TRANSM.	FITTING POSITION	BODY STYLE & DRIVE TYPE & ENGINE	REMARKS	PRODUCT	GSP Ref.
BMW							
330d Touring							
3.0 (170 kw)	2005.06-2008.08		Centre	Estate 4WD M57D306D3		Center Bearing Support	538672
	2005.06-2008.08		Front	Estate 4WD M57D306D3		Flexible Coupling	517956
	2005.06-2008.08		Front	Estate RWD M57D306D3	Inner diameter:57.5mm	Flexible Coupling	517956
	2005.06-2008.08		Front	Estate RWD M57D306D3	Inner diameter:44mm	Flexible Coupling	530160
	2005.06-2008.08		Front	Estate RWD M57D306D3	Inner diameter:43.5mm	Flexible Coupling	530758
	2005.06-2008.08		Front	Estate RWD M57D306D3	Inner diameter:55mm	Flexible Coupling	537669
	2005.06-2008.08		Rear	Estate 4WD M57D306D3		Flexible Coupling	533878
	2005.06-2008.08		Front;Rear	Estate 4WD M57D306D3		Flexible Coupling	517955
	2005.06-2008.08		Front;Rear	Estate RWD M57D306D3		Flexible Coupling	517955
	2005.06-2008.08		Front	Estate 4WD M57D306D3	MT;AT	Flexible Coupling Kit	517956S
	2005.06-2008.08		Front	Estate RWD M57D306D3	AT	Flexible Coupling Kit	517956S
	2005.06-2008.08		Front	Estate RWD M57D306D3	Inner diameter:43.5mm	Flexible Coupling Kit	530758S
	2005.06-2008.08		Front	Estate RWD M57D306D3	Inner diameter:55mm	Flexible Coupling Kit	537669S
3.0 (180 kw)	2008.09-2012.10		Centre	Estate RWD N57D30A		Center Bearing Support	538664
	2008.09-2012.10		Front	Estate RWD N57D30A	Inner diameter:44mm,530160 and 530758 different structure	Flexible Coupling	530160
	2008.09-2012.10		Front	Estate RWD N57D30A	Inner diameter:43.5mm,530758 and 530160 different structure	Flexible Coupling	530758
	2008.09-2012.10		Front	Estate RWD N57D30A	Inner diameter:55mm	Flexible Coupling	537669
	2008.09-2012.10		Front;Rear	Estate RWD N57D30A		Flexible Coupling	517955
	2008.09-2012.10		Front	Estate RWD N57D30A	Inner diameter:55mm	Flexible Coupling Kit	537669S
	2008.09-2012.10		Front;Rear	Estate RWD N57D30A		Flexible Coupling Kit	517955S
3.0 (190 kw)	2012.07-2019.06	AT	Rear	Estate RWD N57D30A		Propshaft	PS901497
	2012.07-2019.06	AT	Rear	Combi Van RWD N57D30A		Propshaft	PS901497
	2012.07-2019.06		Front;Rear	Estate RWD N57D30A		Flexible Coupling	517955
	2012.07-2019.06		Front	Estate RWD N57D30A		Flexible Coupling Kit	537669S
	2012.07-2019.06		Front;Rear	Estate RWD N57D30A		Flexible Coupling Kit	517955S
3.0 (195 kw)	2019.11-		Centre	Estate RWD B57D30A		Center Bearing Support	538640
3.0 (210 kw)	2012.07-2019.06	AT	Rear	Estate RWD N57D30A		Propshaft	PS901497
	2012.07-2019.06		Front;Rear	Estate RWD N57D30A		Flexible Coupling	517955
	2012.07-2019.06		Front;Rear	Estate RWD N57D30A		Flexible Coupling Kit	517955S
330d xDrive							
3.0 (180 kw)	2008.09-2011.12		Centre	Saloon 4WD N57D30A		Center Bearing Support	538664
	2008.09-2011.12		Centre	Saloon 4WD N57D30A		Center Bearing Support	538672
	2008.09-2011.12		Front	Saloon 4WD N57D30A		Flexible Coupling	517956
	2008.09-2011.12		Front	Saloon 4WD N57D30A		Flexible Coupling	537669
	2008.09-2011.12		Front;Rear	Saloon 4WD N57D30A		Flexible Coupling	517955
	2008.09-2011.12		Front	Saloon 4WD N57D30A		Flexible Coupling Kit	537669S
3.0 (190 kw)	2013.03-2018.10	AT/MT	Front	Saloon 4WD N57D30A		Propshaft	PS900112
	2013.03-2018.10	AT	Rear	Saloon 4WD N57D30A	For Modelcode:F30	Propshaft	PS900627
	2013.03-2018.10		Front	Saloon 4WD N57D30A		Flexible Coupling	510596
	2013.03-2018.10		Front;Rear	Saloon 4WD N57D30A		Flexible Coupling	517955
	2013.03-2018.10		Front	Saloon 4WD N57D30A		Flexible Coupling Kit	537669S
	2013.03-2018.10		Front;Rear	Saloon 4WD N57D30A		Flexible Coupling Kit	517955S
3.0 (195 kw)	2019.07-		Centre	Saloon 4WD B57D30A		Center Bearing Support	538640
	2019.07-		Front	Saloon 4WD B57D30A		Flexible Coupling	537631
3.0 (210 kw)	2013.03-2018.10	AT/MT	Front	Saloon 4WD N57D30A		Propshaft	PS900112
	2013.03-2018.10	AT	Rear	Saloon 4WD N57D30A	For Modelcode:F30	Propshaft	PS900627
	2013.03-2018.10		Front;Rear	Saloon 4WD N57D30A		Flexible Coupling	517955
	2013.03-2018.10		Front	Saloon 4WD N57D30A		Flexible Coupling Kit	537669S
	2020.11-		Front	Saloon 4WD B57D30B		Flexible Coupling	510596
330d xDrive Coupe							
3.0 (180 kw)	2008.09-2013.06	AT	Front	Coupe 4WD N57D30A		Propshaft	PS900124
	2008.09-2013.06		Centre	Coupe 4WD N57D30A	MT	Center Bearing Support	538664
	2008.09-2013.06		Centre	Coupe 4WD N57D30A	AT	Center Bearing Support	538672
	2008.09-2013.06		Front	Coupe 4WD N57D30A		Flexible Coupling	517956
	2008.09-2013.06		Front	Coupe 4WD N57D30A		Flexible Coupling	537669
	2008.09-2013.06		Front;Rear	Coupe 4WD N57D30A		Flexible Coupling	517955
	2008.09-2013.06		Front	Coupe 4WD N57D30A		Flexible Coupling Kit	537669S
330d xDrive Gran Turismo							
3.0 (190 kw)	2014.03-		Front	Hatchback 4WD N57D30A		Flexible Coupling	510596
	2014.03-		Front;Rear	Hatchback 4WD N57D30A		Flexible Coupling	517955
	2014.03-		Front;Rear	Hatchback 4WD N57D30A		Flexible Coupling Kit	517955S
3.0 (210 kw)	2014.03-		Front	Hatchback 4WD N57D30A		Flexible Coupling	510596
	2014.03-		Front;Rear	Hatchback 4WD N57D30A		Flexible Coupling	517955
	2014.03-		Front;Rear	Hatchback 4WD N57D30A		Flexible Coupling Kit	517955S

	YEAR	TRANSM.	FITTING POSITION	BODY STYLE & DRIVE TYPE & ENGINE	REMARKS	PRODUCT	GSP Ref.
BMW							
330d xDrive Touring							
3.0 (180 kw)	2008.09-2012.10		Centre	Estate 4WD N57D30A		Center Bearing Support	538664
	2008.09-2012.10		Centre	Estate 4WD N57D30A		Center Bearing Support	538672
	2008.09-2012.10		Front	Estate 4WD N57D30A		Flexible Coupling	517956
	2008.09-2012.10		Front	Estate 4WD N57D30A		Flexible Coupling	537669
	2008.09-2012.10		Front;Rear	Estate 4WD N57D30A		Flexible Coupling	517955
	2008.09-2012.10		Front	Estate 4WD N57D30A		Flexible Coupling Kit	537669S
3.0 (190 kw)	2013.03-2019.06	AT/MT	Front	Estate 4WD N57D30A		Propshaft	PS900112
	2013.03-2019.06	AT/MT	Front	Combi Van 4WD N57D30A		Propshaft	PS900112
	2013.03-2019.06	AT	Rear	Estate 4WD N57D30A		Propshaft	PS900627
	2013.03-2019.06	AT	Rear	Combi Van 4WD N57D30A		Propshaft	PS900627
	2013.03-2019.06		Front	Estate 4WD N57D30A		Flexible Coupling	510596
	2013.03-2019.06		Front;Rear	Estate 4WD N57D30A		Flexible Coupling	517955
	2013.03-2019.06		Front	Estate 4WD N57D30A		Flexible Coupling Kit	537669S
	2013.03-2019.06		Front;Rear	Estate 4WD N57D30A		Flexible Coupling Kit	517955S
3.0 (195 kw)	2019.07-		Centre	Estate 4WD B57D30A		Center Bearing Support	538640
	2019.07-		Front	Estate 4WD B57D30A		Flexible Coupling	537631
3.0 (210 kw)	2013.03-2019.06	AT/MT	Front	Estate 4WD N57D30A		Propshaft	PS900112
	2013.03-2019.06	AT	Rear	Estate 4WD N57D30A		Propshaft	PS900627
	2013.03-2019.06		Front	Estate 4WD N57D30A		Flexible Coupling	510596
	2013.03-2019.06		Front;Rear	Estate 4WD N57D30A		Flexible Coupling	517955
	2013.03-2019.06		Front	Estate 4WD N57D30A		Flexible Coupling Kit	537669S
	2020.11-		Front	Estate 4WD B57D30B		Flexible Coupling	510596
330e							
2.0 (185 kw)	2015.11-2018.10		Centre	Saloon RWD B48B20A		Center Bearing Support	538672
	2015.11-2018.10		Front	Saloon RWD B48B20A	510596 and 537625 different structure	Flexible Coupling	510596
	2015.11-2018.10		Front	Saloon RWD B48B20A	537625 and 510596 different structure	Flexible Coupling	537625
	2015.11-2018.10		Front	Saloon RWD B48B20A	Width:30mm	Flexible Coupling Kit	510596S
	2015.11-2018.10		Front	Saloon RWD B48B20A	Width:32mm	Flexible Coupling Kit	533422S
330e xDrive Touring							
2.0 (215 kw)	2020.07-		Centre	Estate 4WD B48B20A		Center Bearing Support	538656
330i							
2.0 (185 kw)	2015.07-2018.10		Centre	Saloon RWD B46B20B/B48B20B		Center Bearing Support	538672
	2015.07-2018.10		Front	Saloon RWD B46B20B/B48B20B		Flexible Coupling	510596
	2015.07-2018.10		Front	Saloon RWD B46B20B/B48B20B		Flexible Coupling	537625
	2015.07-2018.10		Front	Saloon RWD B46B20B/B48B20B		Flexible Coupling Kit	510596S
	2015.07-2018.10		Front	Saloon RWD B46B20B/B48B20B		Flexible Coupling Kit	537625S
2.0 (190 kw)	2018.11-		Centre	Saloon RWD B48B20B		Center Bearing Support	538640
	2018.11-		Front	Saloon RWD B48B20B		Flexible Coupling	510596
3.0 (168 kw)	2001.01-2005.12	AT	Rear	Saloon RWD M54B306S3		Propshaft	PS901636
	2001.01-2005.12	MT	Rear	Saloon RWD M54B306S3	Date to:2003.03	Propshaft	PS901948
3.0 (170 kw)	2000.06-2005.02	AT	Front	Saloon 4WD M54B306S3		Propshaft	PS900122
	2000.06-2005.02	AT	Rear	Saloon RWD M54B306S3		Propshaft	PS901636
	2000.06-2005.02	MT	Rear	Saloon 4WD M54B306S3		Propshaft	PS901434
	2000.06-2005.02		Centre	Saloon RWD M54B306S3		Center Bearing Support	538653
	2000.06-2005.02		Centre	Saloon 4WD M54B306S3		Center Bearing Support	538665
	2000.06-2005.02		Front	Saloon RWD M54B306S3	510596 and 537625 different structure	Flexible Coupling	510596
	2000.06-2005.02		Front	Saloon 4WD M54B306S3	Inner diameter:50mm	Flexible Coupling	537625
	2000.06-2005.02		Front	Saloon RWD M54B306S3	537625 and 510596 different structure	Flexible Coupling	537625
	2000.06-2005.02		Front	Saloon 4WD M54B306S3	Inner diameter:48.5mm	Flexible Coupling	537631
	2000.06-2005.02		Front	Saloon RWD M54B306S3		Flexible Coupling Kit	510596S
	2000.06-2005.02		Front	Saloon 4WD M54B306S3		Flexible Coupling Kit	537631S
3.0 (190 kw)	2004.12-2011.10	AT	Rear	Saloon RWD N52B30A/N52B30BF		Propshaft	PS901494
	2004.12-2011.10		Centre	Saloon RWD N52B30A/N52B30BF		Center Bearing Support	538672
	2004.12-2011.10		Front	Saloon RWD N52B30A/N52B30BF	510596 and 537625 different structure	Flexible Coupling	510596
	2004.12-2011.10		Front	Saloon RWD N52B30A/N52B30BF	537625 and 510596 different structure	Flexible Coupling	537625
	2004.12-2011.10		Rear	Saloon RWD N52B30A/N52B30BF		Flexible Coupling	533878
	2004.12-2011.10		Front	Saloon RWD N52B30A/N52B30BF		Flexible Coupling Kit	510596S
	2004.12-2011.10		Rear	Saloon RWD N52B30A/N52B30BF		Flexible Coupling Kit	538112S
	2005.10-2007.06	MT	Front	Saloon 4WD N52B30A		Propshaft	PS900124
	2005.10-2007.06	AT	Rear	Saloon 4WD N52B30A		Propshaft	PS900123
	2005.10-2007.06		Centre	Saloon 4WD N52B30A		Center Bearing Support	538672
	2005.10-2007.06		Front	Saloon 4WD N52B30A		Flexible Coupling	517956
	2005.10-2007.06		Rear	Saloon 4WD N52B30A		Flexible Coupling	533878
	2005.10-2007.06		Rear	Saloon 4WD N52B30A		Flexible Coupling Kit	538112S

	YEAR	TRANSM.	FITTING POSITION	BODY STYLE & DRIVE TYPE & ENGINE	REMARKS	PRODUCT	GSP Ref.
BMW							
330i							
3.0 (200 kw)	2007.03-2008.08	6MT	Front	Saloon 4WD N53B30A		Propshaft	PS900124
	2007.03-2008.08	MT	Rear	Saloon 4WD N53B30A		Propshaft	PS900123
	2007.03-2008.08		Centre	Saloon 4WD N53B30A		Center Bearing Support	538672
	2007.03-2008.08		Front	Saloon 4WD N53B30A		Flexible Coupling	517956
	2007.03-2008.08		Rear	Saloon 4WD N53B30A		Flexible Coupling	533878
	2007.03-2008.08		Front	Saloon 4WD N53B30A		Flexible Coupling Kit	517956S
	2007.03-2008.08		Rear	Saloon 4WD N53B30A		Flexible Coupling Kit	538112S
	2007.03-2011.12	AT	Rear	Saloon RWD N52B30A/N52B30BF/N53B30A		Propshaft	PS901494
	2007.03-2011.12		Centre	Saloon RWD N52B30A/N52B30BF/N53B30A		Center Bearing Support	538672
	2007.03-2011.12		Front	Saloon RWD N52B30A/N52B30BF/N53B30A	510596 and 537625 different structure	Flexible Coupling	510596
	2007.03-2011.12		Front	Saloon RWD N52B30A/N52B30BF/N53B30A		Flexible Coupling	510596
	2007.03-2011.12		Front	Saloon RWD N52B30A/N52B30BF/N53B30A	537625 and 510596 different structure	Flexible Coupling	537625
	2007.03-2011.12		Rear	Saloon RWD N52B30A/N52B30BF/N53B30A		Flexible Coupling	533878
	2007.03-2011.12		Front	Saloon RWD N52B30A/N52B30BF/N53B30A		Flexible Coupling Kit	510596S
	2007.03-2011.12		Rear	Saloon RWD N52B30A/N52B30BF/N53B30A		Flexible Coupling Kit	538112S
330i Cabrio							
3.0 (170 kw)	2000.06-2006.08	AT	Rear	Cabriolet RWD M54B306S3		Propshaft	PS900115
	2000.06-2006.08		Centre	Cabriolet RWD M54B306S3		Center Bearing Support	538653
	2000.06-2006.08		Front	Cabriolet RWD M54B306S3	510596 and 537625 different structure	Flexible Coupling	510596
	2000.06-2006.08		Front	Cabriolet RWD M54B306S3	537625 and 510596 different structure	Flexible Coupling	537625
	2000.06-2006.08		Front	Cabriolet RWD M54B306S3		Flexible Coupling Kit	510596S
3.0 (190 kw)	2010.03-2013.10	AT	Rear	Cabriolet RWD N52B30A		Propshaft	PS901494
	2010.03-2013.10		Centre	Cabriolet RWD N52B30A		Center Bearing Support	538672
	2010.03-2013.10		Front	Cabriolet RWD N52B30A		Flexible Coupling	510596
	2010.03-2013.10		Rear	Cabriolet RWD N52B30A		Flexible Coupling	533878
	2010.03-2013.10		Front	Cabriolet RWD N52B30A		Flexible Coupling Kit	510596S
	2010.03-2013.10		Rear	Cabriolet RWD N52B30A		Flexible Coupling Kit	538112S
3.0 (200 kw)	2007.03-2013.10	AT	Rear	Cabriolet RWD N52B30A/N52B30BF/N53B30A		Propshaft	PS901494
	2007.03-2013.10		Centre	Cabriolet RWD N52B30A/N52B30BF/N53B30A		Center Bearing Support	538672
	2007.03-2013.10		Front	Cabriolet RWD N52B30A/N52B30BF/N53B30A		Flexible Coupling	510596
	2007.03-2013.10		Front	Cabriolet RWD N52B30A/N52B30BF/N53B30A	510596 and 537625 different structure	Flexible Coupling	510596
	2007.03-2013.10		Front	Cabriolet RWD N52B30A/N52B30BF/N53B30A	537625 and 510596 different structure	Flexible Coupling	537625
	2007.03-2013.10		Rear	Cabriolet RWD N52B30A/N52B30BF/N53B30A		Flexible Coupling	533878
	2007.03-2013.10		Front	Cabriolet RWD N52B30A/N52B30BF/N53B30A		Flexible Coupling Kit	510596S
	2007.03-2013.10		Rear	Cabriolet RWD N52B30A/N52B30BF/N53B30A		Flexible Coupling Kit	538112S
330i Coupe							
3.0 (170 kw)	2000.06-2006.05	AT	Rear	Coupe RWD M54B306S3		Propshaft	PS900115
	2000.06-2006.05		Centre	Coupe RWD M54B306S3		Center Bearing Support	538653
	2000.06-2006.05		Front	Coupe RWD M54B306S3	510596 and 537625 different structure	Flexible Coupling	510596
	2000.06-2006.05		Front	Coupe RWD M54B306S3	537625 and 510596 different structure	Flexible Coupling	537625
	2000.06-2006.05		Front	Coupe RWD M54B306S3		Flexible Coupling Kit	510596S
	2000.06-2006.07		Centre	Coupe 4WD M54B306S3		Center Bearing Support	538653
	2000.06-2006.07		Front	Coupe 4WD M54B306S3		Flexible Coupling	510596
3.0 (190 kw)	2006.09-2008.09	AT	Front	Coupe 4WD N52B30A		Propshaft	PS900124
	2006.09-2008.09	AT	Rear	Coupe 4WD N52B30A		Propshaft	PS900123
	2006.09-2008.09		Rear	Coupe 4WD N52B30A		Flexible Coupling Kit	538112S
	2010.03-2013.06	AT	Rear	Coupe RWD N52B30A		Propshaft	PS901494
	2010.03-2013.06		Centre	Coupe RWD N52B30A		Center Bearing Support	538672
	2010.03-2013.06		Front	Coupe RWD N52B30A	510596 and 537625 different structure	Flexible Coupling	510596
	2010.03-2013.06		Front	Coupe RWD N52B30A	537625 and 510596 different structure	Flexible Coupling	537625
	2010.03-2013.06		Rear	Coupe RWD N52B30A		Flexible Coupling	533878
	2010.03-2013.06		Front	Coupe RWD N52B30A		Flexible Coupling Kit	510596S
	2010.03-2013.06		Rear	Coupe RWD N52B30A		Flexible Coupling Kit	538112S
3.0 (200 kw)	2006.09-2010.02	AT	Front	Coupe 4WD N52B30A/N53B30A		Propshaft	PS900124
	2006.09-2010.02	AT	Rear	Coupe 4WD N52B30A/N53B30A		Propshaft	PS900123
	2006.09-2010.02		Centre	Coupe 4WD N52B30A/N53B30A		Center Bearing Support	538672
	2006.09-2010.02		Front	Coupe 4WD N52B30A/N53B30A		Flexible Coupling	517956
	2006.09-2010.02		Rear	Coupe 4WD N52B30A/N53B30A		Flexible Coupling	533878
	2006.09-2010.02		Rear	Coupe 4WD N52B30A/N53B30A		Flexible Coupling Kit	538112S
	2006.09-2013.06	AT	Rear	Coupe RWD N52B30A/N52B30BF/N53B30A		Propshaft	PS901494
	2006.09-2013.06		Centre	Coupe RWD N52B30A/N52B30BF/N53B30A		Center Bearing Support	538672
	2006.09-2013.06		Front	Coupe RWD N52B30A/N52B30BF/N53B30A		Flexible Coupling	510596
	2006.09-2013.06		Front	Coupe RWD N52B30A/N52B30BF/N53B30A		Flexible Coupling	537625
	2006.09-2013.06		Rear	Coupe RWD N52B30A/N52B30BF/N53B30A		Flexible Coupling	533878

	YEAR	TRANSM.	FITTING POSITION	BODY STYLE & DRIVE TYPE & ENGINE	REMARKS	PRODUCT	GSP Ref.
BMW							
330i Coupe							
3.0 (200 kw)	2006.09-2013.06		Front	Coupe RWD N52B30A/N52B30BF/N53B30A		Flexible Coupling Kit	510596S
	2006.09-2013.06		Rear	Coupe RWD N52B30A/N52B30BF/N53B30A		Flexible Coupling Kit	538112S
330i Gran Turismo							
2.0 (185 kw)	2016.07-		Front	Hatchback RWD B48B20B		Flexible Coupling	510596
	2016.07-		Front	Hatchback RWD B48B20B		Flexible Coupling	537625
	2016.07-		Front	Hatchback RWD B48B20B		Flexible Coupling Kit	510596S
	2016.07-		Front	Hatchback RWD B48B20B		Flexible Coupling Kit	537625S
330i Touring							
2.0 (185 kw)	2015.07-2019.06		Centre	Estate RWD B48B20B		Center Bearing Support	538672
	2015.07-2019.06		Front	Estate RWD B48B20B		Flexible Coupling	510596
	2015.07-2019.06		Front	Estate RWD B48B20B		Flexible Coupling	537625
	2015.07-2019.06		Front	Estate RWD B48B20B		Flexible Coupling Kit	510596S
	2015.07-2019.06		Front	Estate RWD B48B20B		Flexible Coupling Kit	537625S
2.0 (190 kw)	2019.07-		Centre	Estate RWD B48B20B		Center Bearing Support	538640
	2019.07-		Front	Estate RWD B48B20B		Flexible Coupling	510596
3.0 (170 kw)	2000.06-2005.02	AT	Front	Estate 4WD M54B306S3		Propshaft	PS900122
	2000.06-2005.02	AT	Rear	Estate RWD M54B306S3		Propshaft	PS900115
	2000.06-2005.02	MT	Rear	Estate 4WD M54B306S3		Propshaft	PS901434
	2000.06-2005.02	MT	Rear	Estate RWD M54B306S3	Date to:2003.03	Propshaft	PS901948
	2000.06-2005.02		Centre	Estate RWD M54B306S3		Center Bearing Support	538653
	2000.06-2005.02		Centre	Estate 4WD M54B306S3		Center Bearing Support	538665
	2000.06-2005.02		Front	Estate RWD M54B306S3	510596 and 537625 different structure	Flexible Coupling	510596
	2000.06-2005.02		Front	Estate 4WD M54B306S3	Inner diameter:50mm	Flexible Coupling	537625
	2000.06-2005.02		Front	Estate RWD M54B306S3	537625 and 510596 different structure	Flexible Coupling	537625
	2000.06-2005.02		Front	Estate 4WD M54B306S3	Inner diameter:48.5mm	Flexible Coupling	537631
	2000.06-2005.02		Front	Estate RWD M54B306S3		Flexible Coupling Kit	510596S
	2000.06-2005.02		Front	Estate 4WD M54B306S3		Flexible Coupling Kit	537631S
3.0 (190 kw)	2005.09-2007.08	AT	Rear	Estate RWD N52B30A		Propshaft	PS901494
	2005.09-2007.08		Centre	Estate RWD N52B30A		Center Bearing Support	538672
	2005.09-2007.08		Front	Estate RWD N52B30A	510596 and 537625 different structure	Flexible Coupling	510596
	2005.09-2007.08		Front	Estate RWD N52B30A	537625 and 510596 different structure	Flexible Coupling	537625
	2005.09-2007.08		Rear	Estate RWD N52B30A		Flexible Coupling	533878
	2005.09-2007.08		Front	Estate RWD N52B30A		Flexible Coupling Kit	510596S
	2005.09-2007.08		Rear	Estate RWD N52B30A		Flexible Coupling Kit	538112S
	2005.10-2007.08	MT	Front	Estate 4WD N52B30A		Propshaft	PS900124
	2005.10-2007.08	AT	Rear	Estate 4WD N52B30A		Propshaft	PS900123
	2005.10-2007.08		Centre	Estate 4WD N52B30A		Center Bearing Support	538672
	2005.10-2007.08		Front	Estate 4WD N52B30A		Flexible Coupling	517956
	2005.10-2007.08		Rear	Estate 4WD N52B30A		Flexible Coupling	533878
	2005.10-2007.08		Rear	Estate 4WD N52B30A		Flexible Coupling Kit	538112S
3.0 (200 kw)	2007.03-2012.06	AT	Rear	Estate RWD N52B30A/N53B30A		Propshaft	PS901494
	2007.03-2012.06		Centre	Estate RWD N52B30A/N53B30A		Center Bearing Support	538672
	2007.03-2012.06		Front	Estate RWD N52B30A/N53B30A	510596 and 537625 different structure	Flexible Coupling	510596
	2007.03-2012.06		Front	Estate RWD N52B30A/N53B30A	537625 and 510596 different structure	Flexible Coupling	537625
	2007.03-2012.06		Rear	Estate RWD N52B30A/N53B30A		Flexible Coupling	533878
	2007.03-2012.06		Front	Estate RWD N52B30A/N53B30A		Flexible Coupling Kit	510596S
	2007.03-2012.06		Rear	Estate RWD N52B30A/N53B30A		Flexible Coupling Kit	538112S
	2007.09-2012.10	AT/MT	Front	Estate 4WD N53B30A	Model year to:2008	Propshaft	PS900124
	2007.09-2012.10	AT	Rear	Estate 4WD N53B30A	Model year to:2008	Propshaft	PS900123
	2007.09-2012.10		Centre	Estate 4WD N53B30A		Center Bearing Support	538672
	2007.09-2012.10		Front	Estate 4WD N53B30A		Flexible Coupling	517956
	2007.09-2012.10		Rear	Estate 4WD N53B30A		Flexible Coupling	533878
	2007.09-2012.10		Front	Estate 4WD N53B30A		Flexible Coupling Kit	517956S
	2007.09-2012.10		Rear	Estate 4WD N53B30A		Flexible Coupling Kit	538112S
330i xDrive							
2.0 (185 kw)	2015.07-2018.10	AT/MT	Front	Saloon 4WD B48B20B		Propshaft	PS900112
	2015.07-2018.10		Centre	Saloon 4WD B48B20B		Center Bearing Support	538672
	2015.07-2018.10		Front	Saloon 4WD B48B20B		Flexible Coupling	537625
	2015.07-2018.10		Front;Rear	Saloon 4WD B48B20B		Flexible Coupling	517955
	2015.07-2018.10		Front	Saloon 4WD B48B20B		Flexible Coupling Kit	537625S
	2015.07-2018.10		Front;Rear	Saloon 4WD B48B20B		Flexible Coupling Kit	517955S
2.0 (190 kw)	2018.11-		Centre	Saloon 4WD B46B20B/B48B20B		Center Bearing Support	538640
	2018.11-		Front	Saloon 4WD B46B20B/B48B20B		Flexible Coupling	537631

	YEAR	TRANSM.	FITTING POSITION	BODY STYLE & DRIVE TYPE & ENGINE	REMARKS	PRODUCT	GSP Ref.
BMW							
330i xDrive							
3.0 (200 kw)	2008.09-2011.12		Centre	Saloon 4WD N53B30A		Center Bearing Support	538672
	2008.09-2011.12		Front	Saloon 4WD N53B30A		Flexible Coupling	517956
	2008.09-2011.12		Rear	Saloon 4WD N53B30A		Flexible Coupling	533878
	2008.09-2011.12		Rear	Saloon 4WD N53B30A		Flexible Coupling Kit	538112S
330i xDrive Coupe							
3.0 (200 kw)	2008.09-2013.06		Centre	Coupe 4WD N53B30A		Center Bearing Support	538672
	2008.09-2013.06		Front	Coupe 4WD N53B30A		Flexible Coupling	517956
	2008.09-2013.06		Rear	Coupe 4WD N53B30A		Flexible Coupling	533878
	2008.09-2013.06		Rear	Coupe 4WD N53B30A		Flexible Coupling Kit	538112S
330i xDrive Gran Turismo							
2.0 (183 kw)	2016.07-		Front	Hatchback 4WD B48B20B		Flexible Coupling	510596
2.0 (185 kw)	2016.07-		Front	Hatchback 4WD B48B20B		Flexible Coupling	537625
	2016.07-		Front;Rear	Hatchback 4WD B48B20B		Flexible Coupling	517955
	2016.07-		Front	Hatchback 4WD B48B20B		Flexible Coupling Kit	537625S
330i xDrive Touring							
2.0 (185 kw)	2015.07-2019.06		Centre	Estate 4WD B48B20B		Center Bearing Support	538672
	2015.07-2019.06		Front	Estate 4WD B48B20B		Flexible Coupling	510596
	2015.07-2019.06		Front	Estate 4WD B48B20B		Flexible Coupling	537625
	2015.07-2019.06		Front	Estate 4WD B48B20B		Flexible Coupling Kit	537625S
2.0 (190 kw)	2019.07-		Centre	Estate 4WD B48B20B		Center Bearing Support	538640
	2019.07-		Front	Estate 4WD B48B20B		Flexible Coupling	537631
3.0 (200 kw)	2007.09-2012.06	AT/MT	Front	Estate 4WD N53B30A	Model year to:2008	Propshaft	PS900124
	2007.09-2012.06	AT	Rear	Estate 4WD N53B30A	Model year to:2008	Propshaft	PS900123
	2007.09-2012.06		Centre	Estate 4WD N53B30A		Center Bearing Support	538672
	2007.09-2012.06		Front	Estate 4WD N53B30A		Flexible Coupling	517956
	2007.09-2012.06		Rear	Estate 4WD N53B30A		Flexible Coupling	533878
	2007.09-2012.06		Front	Estate 4WD N53B30A		Flexible Coupling Kit	517956S
	2007.09-2012.06		Rear	Estate 4WD N53B30A		Flexible Coupling Kit	538112S
330xi							
3.0 (168 kw)	2004.09-2005.04	AT	Front	Saloon 4WD M54B30(306S3)		Propshaft	PS900122
335d							
3.0 (210 kw)	2006.07-2011.12		Centre	Saloon RWD M57D306D5		Center Bearing Support	538664
	2006.07-2011.12		Centre	Saloon RWD M57D306D5		Center Bearing Support	538672
	2006.07-2011.12		Front;Rear	Saloon RWD M57D306D5		Flexible Coupling	517955
	2006.07-2011.12		Front	Saloon RWD M57D306D5		Flexible Coupling Kit	537669S
	2006.07-2011.12		Front;Rear	Saloon RWD M57D306D5		Flexible Coupling Kit	517955S
335d Coupe							
3.0 (210 kw)	2006.08-2013.03		Centre	Coupe RWD M57D306D5		Center Bearing Support	538664
	2006.08-2013.03		Centre	Coupe RWD M57D306D5		Center Bearing Support	538672
	2006.08-2013.03		Rear	Coupe RWD M57D306D5		Flexible Coupling	533878
	2006.08-2013.03		Front;Rear	Coupe RWD M57D306D5		Flexible Coupling	517955
	2006.08-2013.03		Front	Coupe RWD M57D306D5		Flexible Coupling Kit	537669S
	2006.08-2013.03		Front;Rear	Coupe RWD M57D306D5		Flexible Coupling Kit	517955S
335d Touring							
3.0 (210 kw)	2006.06-2012.10		Centre	Estate RWD M57D306D5		Center Bearing Support	538664
	2006.06-2012.10		Centre	Estate RWD M57D306D5		Center Bearing Support	538672
	2006.06-2012.10		Front	Estate RWD M57D306D5		Flexible Coupling	530758
	2006.06-2012.10		Front;Rear	Estate RWD M57D306D5		Flexible Coupling	517955
	2006.06-2012.10		Front	Estate RWD M57D306D5		Flexible Coupling Kit	537669S
	2006.06-2012.10		Front;Rear	Estate RWD M57D306D5		Flexible Coupling Kit	517955S
335d xDrive							
3.0 (230 kw)	2013.07-2018.10	AT/MT	Front	Saloon 4WD N57D30B	Date from:2014.01	Propshaft	PS900112
	2013.07-2018.10	AT	Rear	Saloon 4WD N57D30B	For Modelcode:F30	Propshaft	PS900627
	2013.07-2018.10		Front	Saloon 4WD N57D30B		Flexible Coupling	510596
	2013.07-2018.10		Front;Rear	Saloon 4WD N57D30B		Flexible Coupling	517955
	2013.07-2018.10		Front	Saloon 4WD N57D30B		Flexible Coupling Kit	537669S
	2013.07-2018.10		Front;Rear	Saloon 4WD N57D30B		Flexible Coupling Kit	517955S
335d xDrive Gran Turismo							
3.0 (230 kw)	2014.03-		Front	Hatchback 4WD N57D30B		Flexible Coupling	510596
	2014.03-		Front;Rear	Hatchback 4WD N57D30B		Flexible Coupling	517955
	2014.03-		Front;Rear	Hatchback 4WD N57D30B		Flexible Coupling Kit	517955S
335d xDrive Touring							
3.0 (230 kw)	2013.11-2019.06	AT/MT	Front	Estate 4WD N57D30B	Date from:2014.01	Propshaft	PS900112
	2013.11-2019.06	AT	Rear	Estate 4WD N57D30B		Propshaft	PS900627

	YEAR	TRANSM.	FITTING POSITION	BODY STYLE & DRIVE TYPE & ENGINE	REMARKS	PRODUCT	GSP Ref.
BMW							
335d xDrive Touring							
3.0 (230 kw)	2013.11-2019.06		Front	Estate 4WD N57D30B		Flexible Coupling	510596
	2013.11-2019.06		Front;Rear	Estate 4WD N57D30B		Flexible Coupling	517955
	2013.11-2019.06		Front	Estate 4WD N57D30B		Flexible Coupling Kit	537669S
	2013.11-2019.06		Front;Rear	Estate 4WD N57D30B		Flexible Coupling Kit	517955S
335i							
3.0 (220 kw)	2006.03-2011.12	AT	Rear	Saloon RWD N54B30A/N55B30A	Date from:2007.10	Propshaft	PS900119
	2006.03-2011.12	AT	Rear	Saloon RWD N54B30A/N55B30A	Date to:2007.09	Propshaft	PS900120
3.0 (224 kw)	2007.09-2011.12	AT	Rear	Saloon RWD N54B30A/N55B30A	Date from:2007.10	Propshaft	PS900119
	2007.09-2011.12	AT	Rear	Saloon RWD N54B30A/N55B30A	Date to:2007.09	Propshaft	PS900120
	2007.09-2011.12		Centre	Saloon RWD N54B30A/N55B30A	MT	Center Bearing Support	538664
	2007.09-2011.12		Centre	Saloon RWD N54B30A/N55B30A	AT	Center Bearing Support	538672
	2007.09-2011.12		Front;Rear	Saloon RWD N54B30A/N55B30A		Flexible Coupling	517955
	2007.09-2011.12		Front	Saloon RWD N54B30A/N55B30A		Flexible Coupling Kit	537669S
	2007.09-2011.12		Front;Rear	Saloon RWD N54B30A/N55B30A		Flexible Coupling Kit	517955S
3.0 (225 kw)	2006.09-2011.12	AT	Rear	Saloon RWD N54B30A/N55B30A	Date from:2007.10	Propshaft	PS900119
	2006.09-2011.12	AT	Rear	Saloon RWD N54B30A/N55B30A	Date to:2007.09	Propshaft	PS900120
	2006.09-2011.12		Centre	Saloon RWD N54B30A/N55B30A		Center Bearing Support	538664
	2006.09-2011.12		Centre	Saloon RWD N54B30A/N55B30A		Center Bearing Support	538672
	2006.09-2011.12		Front;Rear	Saloon RWD N54B30A/N55B30A		Flexible Coupling	517955
	2006.09-2011.12		Front	Saloon RWD N54B30A/N55B30A		Flexible Coupling Kit	537669S
	2006.09-2011.12		Front;Rear	Saloon RWD N54B30A/N55B30A		Flexible Coupling Kit	517955S
	2007.03-2008.08	MT	Front	Saloon 4WD N54B30A		Propshaft	PS900124
	2007.03-2008.08	6AT	Rear	Saloon 4WD N54B30A	Date from:2007.09	Propshaft	PS901868
	2007.03-2008.08		Centre	Saloon 4WD N54B30A		Center Bearing Support	538664
	2007.03-2008.08		Centre	Saloon 4WD N54B30A		Center Bearing Support	538672
	2007.03-2008.08		Front	Saloon 4WD N54B30A		Flexible Coupling	517956
	2007.03-2008.08		Front	Saloon 4WD N54B30A		Flexible Coupling Kit	517956S
	2011.11-2015.07		Centre	Saloon RWD N55B30A		Center Bearing Support	538664
	2011.11-2015.07		Centre	Saloon RWD N55B30A		Center Bearing Support	538672
	2011.11-2015.07		Front;Rear	Saloon RWD N55B30A		Flexible Coupling	517955
	2011.11-2015.07		Front	Saloon RWD N55B30A		Flexible Coupling Kit	537669S
	2011.11-2015.07		Front;Rear	Saloon RWD N55B30A		Flexible Coupling Kit	517955S
3.0 (240 kw)	2006.03-2011.12	AT	Rear	Saloon RWD N54B30A/N55B30A	Date from:2007.10	Propshaft	PS900119
	2006.03-2011.12	AT	Rear	Saloon RWD N54B30A/N55B30A	Date to:2007.09	Propshaft	PS900120
	2006.03-2011.12		Centre	Saloon RWD N54B30A/N55B30A		Center Bearing Support	538664
	2006.03-2011.12		Front;Rear	Saloon RWD N54B30A/N55B30A		Flexible Coupling	517955
	2006.03-2011.12		Front;Rear	Saloon RWD N54B30A/N55B30A		Flexible Coupling Kit	517955S
	2011.11-2013.06	AT	Rear	Saloon RWD N55B30A		Propshaft	PS900120
	2011.11-2013.06		Centre	Saloon RWD N55B30A	MT	Center Bearing Support	538664
	2011.11-2013.06		Centre	Saloon RWD N55B30A	AT	Center Bearing Support	538672
	2011.11-2013.06		Front;Rear	Saloon RWD N55B30A		Flexible Coupling	517955
	2011.11-2013.06		Front	Saloon RWD N55B30A		Flexible Coupling Kit	537669S
	2011.11-2013.06		Front;Rear	Saloon RWD N55B30A		Flexible Coupling Kit	517955S
3.0 (250 kw)	2013.07-2015.07		Centre	Saloon RWD N55B30A	MT	Center Bearing Support	538664
	2013.07-2015.07		Centre	Saloon RWD N55B30A	AT	Center Bearing Support	538672
	2013.07-2015.07		Front;Rear	Saloon RWD N55B30A		Flexible Coupling	517955
	2013.07-2015.07		Front	Saloon RWD N55B30A		Flexible Coupling Kit	537669S
	2013.07-2015.07		Front;Rear	Saloon RWD N55B30A		Flexible Coupling Kit	517955S
335i Cabrio							
3.0 (225 kw)	2006.12-2013.10	AT	Rear	Cabriolet RWD N54B30A/N55B30A	Date from:2007.10	Propshaft	PS900119
	2006.12-2013.10	AT	Rear	Cabriolet RWD N54B30A/N55B30A	Date to:2007.09	Propshaft	PS900120
	2006.12-2013.10		Centre	Cabriolet RWD N54B30A/N55B30A		Center Bearing Support	538664
	2006.12-2013.10		Centre	Cabriolet RWD N54B30A/N55B30A		Center Bearing Support	538672
	2006.12-2013.10		Front;Rear	Cabriolet RWD N54B30A/N55B30A		Flexible Coupling	517955
	2006.12-2013.10		Front	Cabriolet RWD N54B30A/N55B30A		Flexible Coupling Kit	537669S
	2006.12-2013.10		Front;Rear	Cabriolet RWD N54B30A/N55B30A		Flexible Coupling Kit	517955S
3.0 (240 kw)	2006.06-2013.10	AT	Rear	Cabriolet RWD N54B30A/N55B30A	Date from:2007.10	Propshaft	PS900119
	2006.06-2013.10	AT	Rear	Cabriolet RWD N54B30A/N55B30A	Date to:2007.09	Propshaft	PS900120
	2006.06-2013.10		Centre	Cabriolet RWD N54B30A/N55B30A	MT	Center Bearing Support	538664
	2006.06-2013.10		Centre	Cabriolet RWD N54B30A/N55B30A	AT	Center Bearing Support	538672
	2006.06-2013.10		Front;Rear	Cabriolet RWD N54B30A/N55B30A		Flexible Coupling	517955
	2006.06-2013.10		Front;Rear	Cabriolet RWD N54B30A/N55B30A		Flexible Coupling Kit	517955S

	YEAR	TRANSM.	FITTING POSITION	BODY STYLE & DRIVE TYPE & ENGINE	REMARKS	PRODUCT	GSP Ref.
BMW							
335i Coupe							
3.0 (224 kw)	2007.03-2013.06	AT	Rear	Coupe RWD N54B30A		Propshaft	PS900120
3.0 (225 kw)	2006.06-2013.06	AT	Rear	Coupe RWD N54B30A/N55B30A	Date from:2007.10	Propshaft	PS900119
	2006.06-2013.06	AT	Rear	Coupe RWD N54B30A/N55B30A	Date to:2007.09	Propshaft	PS900120
	2006.06-2013.06		Centre	Coupe RWD N54B30A/N55B30A		Center Bearing Support	538664
	2006.06-2013.06		Centre	Coupe RWD N54B30A/N55B30A		Center Bearing Support	538672
	2006.06-2013.06		Front;Rear	Coupe RWD N54B30A/N55B30A		Flexible Coupling	517955
	2006.06-2013.06		Front	Coupe RWD N54B30A/N55B30A		Flexible Coupling Kit	537669S
	2006.06-2013.06		Front;Rear	Coupe RWD N54B30A/N55B30A		Flexible Coupling Kit	517955S
	2007.06-2008.12	AT	Front	Coupe 4WD N54B30A		Propshaft	PS900124
	2007.06-2008.12	6AT	Rear	Coupe 4WD N54B30A	Date from:2007.09	Propshaft	PS901868
	2007.06-2008.12		Centre	Coupe 4WD N54B30A		Center Bearing Support	538664
	2007.06-2008.12		Centre	Coupe 4WD N54B30A		Center Bearing Support	538672
	2007.06-2008.12		Front	Coupe 4WD N54B30A		Flexible Coupling	517956
	2007.06-2008.12		Rear	Coupe 4WD N54B30A		Flexible Coupling	533878
	2007.06-2008.12		Front	Coupe 4WD N54B30A		Flexible Coupling Kit	517956S
3.0 (240 kw)	2006.06-2013.06	AT	Rear	Coupe RWD N54B30A/N55B30A	Date from:2007.10	Propshaft	PS900119
	2006.06-2013.06	AT	Rear	Coupe RWD N54B30A/N55B30A	Date to:2007.09	Propshaft	PS900120
	2006.06-2013.06		Centre	Coupe RWD N54B30A/N55B30A		Center Bearing Support	538664
	2006.06-2013.06		Front;Rear	Coupe RWD N54B30A/N55B30A		Flexible Coupling	517955
	2006.06-2013.06		Front;Rear	Coupe RWD N54B30A/N55B30A		Flexible Coupling Kit	517955S
335i Gran Turismo							
3.0 (225 kw)	2013.03-2016.06		Front;Rear	Hatchback RWD N55B30A		Flexible Coupling	517955
	2013.03-2016.06		Front;Rear	Hatchback RWD N55B30A		Flexible Coupling Kit	517955S
3.0 (240 kw)	2013.03-2014.03		Front;Rear	Hatchback RWD N55B30A		Flexible Coupling	517955
	2013.03-2014.03		Front;Rear	Hatchback RWD N55B30A		Flexible Coupling Kit	517955S
3.0 (250 kw)	2014.04-2016.06		Front;Rear	Hatchback RWD N55B30A		Flexible Coupling	517955
	2014.04-2016.06		Front;Rear	Hatchback RWD N55B30A		Flexible Coupling Kit	517955S
335i Touring							
3.0 (225 kw)	2006.09-2012.06	AT	Rear	Estate RWD N54B30A/N55B30A	Date from:2007.10	Propshaft	PS900119
	2006.09-2012.06	AT	Rear	Estate RWD N54B30A/N55B30A	Date to:2007.09	Propshaft	PS900120
	2006.09-2012.06		Centre	Estate RWD N54B30A/N55B30A		Center Bearing Support	538664
	2006.09-2012.06		Centre	Estate RWD N54B30A/N55B30A		Center Bearing Support	538672
	2006.09-2012.06		Front;Rear	Estate RWD N54B30A/N55B30A		Flexible Coupling	517955
	2006.09-2012.06		Front	Estate RWD N54B30A/N55B30A		Flexible Coupling Kit	537669S
	2006.09-2012.06		Front;Rear	Estate RWD N54B30A/N55B30A		Flexible Coupling Kit	517955S
	2007.03-2008.08	MT	Front	Estate 4WD N54B30A		Propshaft	PS900124
	2007.03-2008.08	6AT	Rear	Estate 4WD N54B30A	Date from:2007.09	Propshaft	PS901868
	2007.03-2008.08		Centre	Estate 4WD N54B30A		Center Bearing Support	538664
	2007.03-2008.08		Centre	Estate 4WD N54B30A		Center Bearing Support	538672
	2007.03-2008.08		Front	Estate 4WD N54B30A		Flexible Coupling	517956
	2007.03-2008.08		Front	Estate 4WD N54B30A		Flexible Coupling Kit	517956S
	2013.03-2015.06		Centre	Estate RWD N55B30A	MT	Center Bearing Support	538664
	2013.03-2015.06		Centre	Estate RWD N55B30A	AT	Center Bearing Support	538672
	2013.03-2015.06		Front;Rear	Estate RWD N55B30A		Flexible Coupling	517955
	2013.03-2015.06		Front	Estate RWD N55B30A		Flexible Coupling Kit	537669S
	2013.03-2015.06		Front;Rear	Estate RWD N55B30A		Flexible Coupling Kit	517955S
3.0 (240 kw)	2006.09-2008.08	MT	Front	Estate 4WD N54B30A		Propshaft	PS900124
	2006.09-2008.08	6AT	Rear	Estate 4WD N54B30A	Date from:2007.09	Propshaft	PS901868
	2006.09-2008.08		Centre	Estate 4WD N54B30A		Center Bearing Support	538664
	2006.09-2012.06	AT	Rear	Estate RWD N54B30A/N55B30A	Date from:2007.10	Propshaft	PS900119
	2006.09-2012.06	AT	Rear	Estate RWD N54B30A/N55B30A	Date to:2007.09	Propshaft	PS900120
	2006.09-2012.06		Centre	Estate RWD N54B30A/N55B30A		Center Bearing Support	538664
	2006.09-2012.06		Front;Rear	Estate RWD N54B30A/N55B30A		Flexible Coupling	517955
	2006.09-2012.06		Front;Rear	Estate RWD N54B30A/N55B30A		Flexible Coupling Kit	517955S
	2013.03-2013.06		Centre	Estate RWD N55B30A		Center Bearing Support	538664
	2013.03-2013.06		Front;Rear	Estate RWD N55B30A		Flexible Coupling	517955
	2013.03-2013.06		Front	Estate RWD N55B30A		Flexible Coupling Kit	537669S
	2013.03-2013.06		Front;Rear	Estate RWD N55B30A		Flexible Coupling Kit	517955S
3.0 (250 kw)	2013.07-2015.06		Centre	Estate RWD N55B30A		Center Bearing Support	538664
	2013.07-2015.06		Front;Rear	Estate RWD N55B30A		Flexible Coupling	517955
	2013.07-2015.06		Front	Estate RWD N55B30A		Flexible Coupling Kit	537669S
	2013.07-2015.06		Front;Rear	Estate RWD N55B30A		Flexible Coupling Kit	517955S

	YEAR	TRANSM.	FITTING POSITION	BODY STYLE & DRIVE TYPE & ENGINE	REMARKS	PRODUCT	GSP Ref.
BMW							
335i xDrive							
3.0 (224 kw)	2009.01-2012.12	AT	Front	Saloon 4WD N54B30A/N55B30A		Propshaft	PS900124
	2009.01-2012.12		Centre	Saloon 4WD N54B30A/N55B30A	MT	Center Bearing Support	538664
	2009.01-2012.12		Centre	Saloon 4WD N54B30A/N55B30A	AT	Center Bearing Support	538672
3.0 (225 kw)	2008.09-2011.10		Centre	Saloon 4WD N54B30A/N55B30A		Center Bearing Support	538664
	2008.09-2011.10		Centre	Saloon 4WD N54B30A/N55B30A		Center Bearing Support	538672
	2008.09-2011.10		Front	Saloon 4WD N54B30A/N55B30A		Flexible Coupling	517956
	2012.07-2015.07	AT/MT	Front	Saloon 4WD N55B30A	Date from:2013.01	Propshaft	PS900112
	2012.07-2015.07		Centre	Saloon 4WD N55B30A		Center Bearing Support	538672
	2012.07-2015.07		Front	Saloon 4WD N55B30A		Flexible Coupling	510596
	2012.07-2015.07		Front;Rear	Saloon 4WD N55B30A		Flexible Coupling	517955
	2012.07-2015.07		Front;Rear	Saloon 4WD N55B30A		Flexible Coupling Kit	517955S
3.0 (240 kw)	2006.09-2011.10		Centre	Saloon 4WD N54B30A/N55B30A		Center Bearing Support	538664
	2006.09-2011.10		Centre	Saloon 4WD N54B30A/N55B30A		Center Bearing Support	538672
	2012.07-2013.06	AT/MT	Front	Saloon 4WD N55B30A	Date from:2013.01	Propshaft	PS900112
	2012.07-2013.06		Front	Saloon 4WD N55B30A		Flexible Coupling	510596
	2012.07-2013.06		Front;Rear	Saloon 4WD N55B30A		Flexible Coupling	517955
	2012.07-2013.06		Front;Rear	Saloon 4WD N55B30A		Flexible Coupling Kit	517955S
3.0 (250 kw)	2012.07-2015.07		Front	Saloon 4WD N55B30A		Flexible Coupling	510596
	2012.07-2015.07		Front;Rear	Saloon 4WD N55B30A		Flexible Coupling	517955
	2012.07-2015.07		Front;Rear	Saloon 4WD N55B30A		Flexible Coupling Kit	517955S
335i xDrive Coupe							
3.0 (225 kw)	2008.09-2013.06		Centre	Coupe 4WD N54B30A/N55B30A	MT	Center Bearing Support	538664
	2008.09-2013.06		Centre	Coupe 4WD N54B30A/N55B30A	AT	Center Bearing Support	538672
	2008.09-2013.06		Front	Coupe 4WD N54B30A/N55B30A		Flexible Coupling	517956
	2008.09-2013.06		Rear	Coupe 4WD N54B30A/N55B30A		Flexible Coupling	533878
3.0 (240 kw)	2007.03-2013.06	MT	Front	Coupe 4WD N54B30A/N55B30A		Propshaft	PS900124
	2007.03-2013.06		Centre	Coupe 4WD N54B30A/N55B30A		Center Bearing Support	538664
335i xDrive Gran Turismo							
3.0 (225 kw)	2013.07-2016.06		Front	Hatchback 4WD N55B30A		Flexible Coupling	510596
	2013.07-2016.06		Front;Rear	Hatchback 4WD N55B30A		Flexible Coupling	517955
	2013.07-2016.06		Front;Rear	Hatchback 4WD N55B30A		Flexible Coupling Kit	517955S
3.0 (240 kw)	2013.03-2014.03		Front;Rear	Hatchback 4WD N55B30A		Flexible Coupling	517955
	2013.03-2014.03		Front;Rear	Hatchback 4WD N55B30A		Flexible Coupling Kit	517955S
3.0 (250 kw)	2014.04-2016.05		Front	Hatchback 4WD N55B30A		Flexible Coupling	510596
	2014.04-2016.05		Front;Rear	Hatchback 4WD N55B30A		Flexible Coupling	517955
	2014.04-2016.05		Front;Rear	Hatchback 4WD N55B30A		Flexible Coupling Kit	517955S
335i xDrive Touring							
3.0 (225 kw)	2008.09-2012.06		Centre	Estate 4WD N54B30A/N55B30A		Center Bearing Support	538664
	2008.09-2012.06		Centre	Estate 4WD N54B30A/N55B30A		Center Bearing Support	538672
	2008.09-2012.06		Front	Estate 4WD N54B30A/N55B30A		Flexible Coupling	517956
	2013.03-2015.06		Centre	Estate 4WD N55B30A		Center Bearing Support	538672
	2013.03-2015.06		Front	Estate 4WD N55B30A		Flexible Coupling	510596
	2013.03-2015.06		Front;Rear	Estate 4WD N55B30A		Flexible Coupling	517955
	2013.03-2015.06		Front;Rear	Estate 4WD N55B30A		Flexible Coupling Kit	517955S
3.0 (240 kw)	2008.09-2012.06		Centre	Estate 4WD N54B30A/N55B30A		Center Bearing Support	538664
	2013.03-2013.06		Centre	Estate 4WD N55B30A		Center Bearing Support	538672
	2013.03-2013.06		Front	Estate 4WD N55B30A		Flexible Coupling	510596
	2013.03-2013.06		Front;Rear	Estate 4WD N55B30A		Flexible Coupling	517955
	2013.03-2013.06		Front;Rear	Estate 4WD N55B30A		Flexible Coupling Kit	517955S
3.0 (250 kw)	2013.07-2015.06		Centre	Estate 4WD N55B30A		Center Bearing Support	538672
	2013.07-2015.06		Front	Estate 4WD N55B30A		Flexible Coupling	510596
	2013.07-2015.06		Front;Rear	Estate 4WD N55B30A		Flexible Coupling	517955
	2013.07-2015.06		Front;Rear	Estate 4WD N55B30A		Flexible Coupling Kit	517955S
340i							
3.0 (240 kw)	2015.07-2018.10		Centre	Saloon RWD B58B30A		Center Bearing Support	538664
	2015.07-2018.10		Front;Rear	Saloon RWD B58B30A		Flexible Coupling	517955
	2015.07-2018.10		Front;Rear	Saloon RWD B58B30A		Flexible Coupling Kit	517955S
3.0 (265 kw)	2015.07-2018.10		Centre	Saloon RWD B58B30A		Center Bearing Support	538664
	2015.07-2018.10		Front;Rear	Saloon RWD B58B30A		Flexible Coupling	517955
	2015.07-2018.10		Front;Rear	Saloon RWD B58B30A		Flexible Coupling Kit	517955S
340i Gran Turismo							
3.0 (240 kw)	2016.07-		Front;Rear	Hatchback RWD B58B30A		Flexible Coupling	517955
	2016.07-		Front;Rear	Hatchback RWD B58B30A		Flexible Coupling Kit	517955S

	YEAR	TRANSM.	FITTING POSITION	BODY STYLE & DRIVE TYPE & ENGINE	REMARKS	PRODUCT	GSP Ref.
BMW							
340i Touring							
3.0 (240 kw)	2015.07-2019.06		Centre	Estate RWD B58B30A		Center Bearing Support	538664
	2015.07-2019.06		Front;Rear	Estate RWD B58B30A		Flexible Coupling	517955
	2015.07-2019.06		Front;Rear	Estate RWD B58B30A		Flexible Coupling Kit	517955S
3.0 (265 kw)	2015.07-2019.06		Centre	Estate RWD B58B30A		Center Bearing Support	538664
	2015.07-2019.06		Front;Rear	Estate RWD B58B30A		Flexible Coupling	517955
	2015.07-2019.06		Front;Rear	Estate RWD B58B30A		Flexible Coupling Kit	517955S
340i xDrive							
3.0 (240 kw)	2015.07-2018.10	AT/MT	Front	Saloon 4WD B58B30A		Propshaft	PS900112
	2015.07-2018.10		Centre	Saloon 4WD B58B30A		Center Bearing Support	538672
	2015.07-2018.10		Front	Saloon 4WD B58B30A		Flexible Coupling	510596
	2015.07-2018.10		Front;Rear	Saloon 4WD B58B30A		Flexible Coupling	517955
	2015.07-2018.10		Front;Rear	Saloon 4WD B58B30A		Flexible Coupling Kit	517955S
3.0 (265 kw)	2015.07-2018.10	AT/MT	Front	Saloon 4WD B58B30A		Propshaft	PS900112
	2015.07-2018.10		Centre	Saloon 4WD B58B30A		Center Bearing Support	538672
	2015.07-2018.10		Front	Saloon 4WD B58B30A		Flexible Coupling	510596
	2015.07-2018.10		Front;Rear	Saloon 4WD B58B30A		Flexible Coupling	517955
	2015.07-2018.10		Front;Rear	Saloon 4WD B58B30A		Flexible Coupling Kit	517955S
340i xDrive Gran Turismo							
3.0 (240 kw)	2016.07-		Front;Rear	Hatchback 4WD B58B30A		Flexible Coupling	517955
	2016.07-		Front;Rear	Hatchback 4WD B58B30A		Flexible Coupling Kit	517955S
340i xDrive Touring							
3.0 (240 kw)	2015.07-2019.06		Centre	Estate 4WD B58B30A		Center Bearing Support	538672
	2015.07-2019.06		Front	Estate 4WD B58B30A		Flexible Coupling	510596
	2015.07-2019.06		Front;Rear	Estate 4WD B58B30A		Flexible Coupling	517955
	2015.07-2019.06		Front;Rear	Estate 4WD B58B30A		Flexible Coupling Kit	517955S
3.0 (265 kw)	2015.07-2019.06		Centre	Estate 4WD B58B30A		Center Bearing Support	538672
	2015.07-2019.06		Front	Estate 4WD B58B30A		Flexible Coupling	510596
	2015.07-2019.06		Front;Rear	Estate 4WD B58B30A		Flexible Coupling	517955
	2015.07-2019.06		Front;Rear	Estate 4WD B58B30A		Flexible Coupling Kit	517955S
418d Coupe							
2.0 (100 kw)	2015.03-2017.10		Centre	Coupe RWD B47D20A		Center Bearing Support	538672
	2015.03-2017.10		Front	Coupe RWD B47D20A		Flexible Coupling	510596
	2015.03-2017.10		Front	Coupe RWD B47D20A		Flexible Coupling	537625
	2015.03-2017.10		Front	Coupe RWD B47D20A		Flexible Coupling Kit	510596S
	2015.03-2017.10		Front	Coupe RWD B47D20A		Flexible Coupling Kit	537625S
2.0 (110 kw)	2015.03-2017.10		Centre	Coupe RWD B47D20A		Center Bearing Support	538672
	2015.03-2017.10		Front	Coupe RWD B47D20A		Flexible Coupling	510596
	2015.03-2017.10		Front	Coupe RWD B47D20A		Flexible Coupling	537625
	2015.03-2017.10		Front	Coupe RWD B47D20A		Flexible Coupling Kit	510596S
	2015.03-2017.10		Front	Coupe RWD B47D20A		Flexible Coupling Kit	537625S
418d Gran Coupe							
2.0 (100 kw)	2014.03-2020.12		Centre	Coupe RWD B47D20A/N47D20C		Center Bearing Support	538672
	2014.03-2020.12		Front	Coupe RWD B47D20A/N47D20C		Flexible Coupling	510596
	2014.03-2020.12		Front	Coupe RWD B47D20A/N47D20C		Flexible Coupling	537625
	2014.03-2020.12		Front	Coupe RWD B47D20A/N47D20C		Flexible Coupling Kit	537625S
2.0 (105 kw)	2014.03-2015.06		Centre	Coupe RWD N47D20C		Center Bearing Support	538672
	2014.03-2015.06		Front	Coupe RWD N47D20C		Flexible Coupling	510596
	2014.03-2015.06		Front	Coupe RWD N47D20C		Flexible Coupling	537625
	2014.03-2015.06		Front	Coupe RWD N47D20C		Flexible Coupling Kit	537625S
2.0 (110 kw)	2015.07-2020.12		Centre	Coupe RWD B47D20A		Center Bearing Support	538672
	2015.07-2020.12		Front	Coupe RWD B47D20A		Flexible Coupling	510596
	2015.07-2020.12		Front	Coupe RWD B47D20A		Flexible Coupling	537625
	2015.07-2020.12		Front	Coupe RWD B47D20A		Flexible Coupling Kit	537625S
418i Coupe							
1.5 (100 kw)	2016.03-2020.06	AT	Rear	Coupe RWD B38B15A	Model year to:2017	Propshaft	PS901431
	2016.03-2020.06		Centre	Coupe RWD B38B15A		Center Bearing Support	538672
	2016.03-2020.06		Front	Coupe RWD B38B15A	AT,Inner diameter:50mm,510596 and 537625 different structure	Flexible Coupling	510596
	2016.03-2020.06		Front	Coupe RWD B38B15A	MT,Inner diameter:38.5mm	Flexible Coupling	510597
	2016.03-2020.06		Front	Coupe RWD B38B15A	AT,Inner diameter:50mm,510596 and 537625 different structure	Flexible Coupling	537625
	2016.03-2020.06		Front	Coupe RWD B38B15A	Inner diameter:50mm,510596S and 537625S different structure	Flexible Coupling Kit	510596S
	2016.03-2020.06		Front	Coupe RWD B38B15A	Inner diameter:38.5mm	Flexible Coupling Kit	510597S
	2016.03-2020.06		Front	Coupe RWD B38B15A	Inner diameter:50mm,537625S and 510596S different structure	Flexible Coupling Kit	537625S

	YEAR	TRANSM.	FITTING POSITION	BODY STYLE & DRIVE TYPE & ENGINE	REMARKS	PRODUCT	GSP Ref.
BMW							
418i Gran Coupe							
1.5 (100 kw)	2015.07-2020.12	AT	Rear	Coupe RWD B38B15A	Model year to:2017	Propshaft	PS901431
	2015.07-2020.12		Centre	Coupe RWD B38B15A		Center Bearing Support	538672
	2015.07-2020.12		Front	Coupe RWD B38B15A	Inner diameter:50mm,510596 and 537625 different structure	Flexible Coupling	510596
	2015.07-2020.12		Front	Coupe RWD B38B15A	MT,Inner diameter:38.5mm	Flexible Coupling	510597
	2015.07-2020.12		Front	Coupe RWD B38B15A	Inner diameter:50mm,537625 and 510596 different structure	Flexible Coupling	537625
	2015.07-2020.12		Front	Coupe RWD B38B15A	Inner diameter:50mm,510596S and 537625S different structure	Flexible Coupling Kit	510596S
	2015.07-2020.12		Front	Coupe RWD B38B15A	Inner diameter:38.5mm	Flexible Coupling Kit	510597S
	2015.07-2020.12		Front	Coupe RWD B38B15A	Inner diameter:50mm,537625S and 510596S different structure	Flexible Coupling Kit	537625S
420d Cabrio							
2.0 (120 kw)	2013.10-2020.07		Centre	Cabriolet RWD B47D20A/N47D20C		Center Bearing Support	538672
	2013.10-2020.07		Front	Cabriolet RWD B47D20A/N47D20C		Flexible Coupling	510596
	2013.10-2020.07		Front	Cabriolet RWD B47D20A/N47D20C		Flexible Coupling	537625
	2013.10-2020.07		Front;Rear	Cabriolet RWD B47D20A/N47D20C		Flexible Coupling	517955
	2013.10-2020.07		Front	Cabriolet RWD B47D20A/N47D20C		Flexible Coupling Kit	510596S
	2013.10-2020.07		Front	Cabriolet RWD B47D20A/N47D20C		Flexible Coupling Kit	537625S
	2013.10-2020.07		Front;Rear	Cabriolet RWD B47D20A/N47D20C		Flexible Coupling Kit	517955S
	2020.11-		Front	Cabriolet RWD B47D20B	Width:30mm	Flexible Coupling	510596
2.0 (135 kw)	2013.10-2015.06		Centre	Cabriolet RWD N47D20C	Inner diameter:35mm	Center Bearing Support	538664
	2013.10-2015.06		Centre	Cabriolet RWD N47D20C	Inner diameter:30mm	Center Bearing Support	538672
	2013.10-2015.06		Front	Cabriolet RWD N47D20C		Flexible Coupling	510596
	2013.10-2015.06		Front	Cabriolet RWD N47D20C		Flexible Coupling	537625
	2013.10-2015.06		Front;Rear	Cabriolet RWD N47D20C		Flexible Coupling	517955
	2013.10-2015.06		Front	Cabriolet RWD N47D20C		Flexible Coupling Kit	510596S
	2013.10-2015.06		Front	Cabriolet RWD N47D20C		Flexible Coupling Kit	537625S
	2013.10-2015.06		Front;Rear	Cabriolet RWD N47D20C		Flexible Coupling Kit	517955S
2.0 (140 kw)	2015.07-2020.07		Centre	Cabriolet RWD B47D20A		Center Bearing Support	538672
	2015.07-2020.07		Front	Cabriolet RWD B47D20A		Flexible Coupling	510596
	2015.07-2020.07		Front	Cabriolet RWD B47D20A		Flexible Coupling	537625
	2015.07-2020.07		Front	Cabriolet RWD B47D20A		Flexible Coupling Kit	510596S
	2015.07-2020.07		Front	Cabriolet RWD B47D20A		Flexible Coupling Kit	537625S
	2020.11-		Front	Cabriolet RWD B47D20B	Width:30mm	Flexible Coupling	510596
2.0 (147 kw)	2013.10-2015.06		Centre	Cabriolet RWD N47D20C		Center Bearing Support	538672
	2013.10-2015.06		Front	Cabriolet RWD N47D20C		Flexible Coupling	510596
	2013.10-2015.06		Front	Cabriolet RWD N47D20C		Flexible Coupling	537625
	2013.10-2015.06		Front;Rear	Cabriolet RWD N47D20C		Flexible Coupling	517955
	2013.10-2015.06		Front	Cabriolet RWD N47D20C		Flexible Coupling Kit	510596S
	2013.10-2015.06		Front	Cabriolet RWD N47D20C		Flexible Coupling Kit	537625S
	2013.10-2015.06		Front;Rear	Cabriolet RWD N47D20C		Flexible Coupling Kit	517955S
2.0 (151 kw)	2015.07-2020.07		Centre	Cabriolet RWD B47D20A		Center Bearing Support	538672
420d Coupe							
2.0 (120 kw)	2013.07-2020.06		Centre	Coupe RWD B47D20A/N47D20C		Center Bearing Support	538672
	2013.07-2020.06		Front	Coupe RWD B47D20A/N47D20C		Flexible Coupling	510596
	2013.07-2020.06		Front	Coupe RWD B47D20A/N47D20C		Flexible Coupling	537625
	2013.07-2020.06		Front;Rear	Coupe RWD B47D20A/N47D20C		Flexible Coupling	517955
	2013.07-2020.06		Front	Coupe RWD B47D20A/N47D20C		Flexible Coupling Kit	510596S
	2013.07-2020.06		Front	Coupe RWD B47D20A/N47D20C		Flexible Coupling Kit	537625S
	2013.07-2020.06		Front;Rear	Coupe RWD B47D20A/N47D20C		Flexible Coupling Kit	517955S
	2020.07-		Front	Coupe RWD B47D20B	Width:30mm	Flexible Coupling	510596
2.0 (135 kw)	2013.07-2015.02		Centre	Coupe RWD N47D20C		Center Bearing Support	538672
	2013.07-2015.02		Front	Coupe RWD N47D20C		Flexible Coupling	510596
	2013.07-2015.02		Front	Coupe RWD N47D20C		Flexible Coupling	537625
	2013.07-2015.02		Front;Rear	Coupe RWD N47D20C		Flexible Coupling	517955
	2013.07-2015.02		Front	Coupe RWD N47D20C		Flexible Coupling Kit	510596S
	2013.07-2015.02		Front	Coupe RWD N47D20C		Flexible Coupling Kit	537625S
	2013.07-2015.02		Front;Rear	Coupe RWD N47D20C		Flexible Coupling Kit	517955S
2.0 (140 kw)	2015.03-2020.06		Centre	Coupe RWD B47D20A		Center Bearing Support	538672
	2015.03-2020.06		Front	Coupe RWD B47D20A		Flexible Coupling	510596
	2015.03-2020.06		Front	Coupe RWD B47D20A		Flexible Coupling	537625
	2015.03-2020.06		Front	Coupe RWD B47D20A		Flexible Coupling Kit	510596S
	2015.03-2020.06		Front	Coupe RWD B47D20A		Flexible Coupling Kit	537625S
	2020.07-		Front	Coupe RWD B47D20B	Width:30mm	Flexible Coupling	510596
2.0 (147 kw)	2013.07-2015.02		Centre	Coupe RWD N47D20C		Center Bearing Support	538672
	2013.07-2015.02		Front	Coupe RWD N47D20C		Flexible Coupling	510596
	2013.07-2015.02		Front	Coupe RWD N47D20C		Flexible Coupling	537625

	YEAR	TRANSM.	FITTING POSITION	BODY STYLE & DRIVE TYPE & ENGINE	REMARKS	PRODUCT	GSP Ref.
BMW							
420d Coupe							
2.0 (147 kw)	2013.07-2015.02		Front;Rear	Coupe RWD N47D20C		Flexible Coupling	517955
	2013.07-2015.02		Front	Coupe RWD N47D20C		Flexible Coupling Kit	510596S
	2013.07-2015.02		Front	Coupe RWD N47D20C		Flexible Coupling Kit	537625S
	2013.07-2015.02		Front;Rear	Coupe RWD N47D20C		Flexible Coupling Kit	517955S
420d Gran Coupe							
2.0 (120 kw)	2014.03-2020.12		Centre	Coupe RWD B47D20A/N47D20C		Center Bearing Support	538672
	2014.03-2020.12		Front	Coupe RWD B47D20A/N47D20C		Flexible Coupling	510596
	2014.03-2020.12		Front	Coupe RWD B47D20A/N47D20C		Flexible Coupling	537625
	2014.03-2020.12		Front;Rear	Coupe RWD B47D20A/N47D20C		Flexible Coupling	517955
	2014.03-2020.12		Front	Coupe RWD B47D20A/N47D20C		Flexible Coupling Kit	537625S
	2014.03-2020.12		Front;Rear	Coupe RWD B47D20A/N47D20C		Flexible Coupling Kit	517955S
2.0 (135 kw)	2014.03-2015.02		Centre	Coupe RWD N47D20C		Center Bearing Support	538672
	2014.03-2015.02		Front	Coupe RWD N47D20C		Flexible Coupling	510596
	2014.03-2015.02		Front	Coupe RWD N47D20C		Flexible Coupling	537625
	2014.03-2015.02		Front;Rear	Coupe RWD N47D20C		Flexible Coupling	517955
	2014.03-2015.02		Front	Coupe RWD N47D20C		Flexible Coupling Kit	537625S
	2014.03-2015.02		Front;Rear	Coupe RWD N47D20C		Flexible Coupling Kit	517955S
2.0 (140 kw)	2015.03-2020.12		Centre	Coupe RWD B47D20A		Center Bearing Support	538672
	2015.03-2020.12		Front	Coupe RWD B47D20A		Flexible Coupling	510596
	2015.03-2020.12		Front	Coupe RWD B47D20A		Flexible Coupling	537625
	2015.03-2020.12		Front;Rear	Coupe RWD B47D20A		Flexible Coupling	517955
	2015.03-2020.12		Front	Coupe RWD B47D20A		Flexible Coupling Kit	537625S
	2021.07-		Front	Coupe RWD B47D20B	Width:30mm	Flexible Coupling	510596
2.0 (147 kw)	2014.03-2015.02		Centre	Coupe RWD N47D20C		Center Bearing Support	538672
	2014.03-2015.02		Front	Coupe RWD N47D20C		Flexible Coupling	510596
	2014.03-2015.02		Front	Coupe RWD N47D20C		Flexible Coupling	537625
	2014.03-2015.02		Front;Rear	Coupe RWD N47D20C		Flexible Coupling	517955
	2014.03-2015.02		Front	Coupe RWD N47D20C		Flexible Coupling Kit	537625S
	2014.03-2015.02		Front;Rear	Coupe RWD N47D20C		Flexible Coupling Kit	517955S
420d xDrive Coupe							
2.0 (120 kw)	2015.03-2020.06	AT	Rear	Coupe 4WD B47D20A	Date to:2015.07	Propshaft	PS901433
	2015.03-2020.06		Centre	Coupe 4WD B47D20A		Center Bearing Support	538672
	2015.03-2020.06		Front	Coupe 4WD B47D20A		Flexible Coupling	510596
	2015.03-2020.06		Front	Coupe 4WD B47D20A		Flexible Coupling	537625
	2015.03-2020.06		Front	Coupe 4WD B47D20A	510596S and 537625S different structure	Flexible Coupling Kit	510596S
	2015.03-2020.06		Front	Coupe 4WD B47D20A	537625S and 510596S different structure	Flexible Coupling Kit	537625S
2.0 (135 kw)	2013.11-2015.02	AT	Rear	Coupe 4WD N47D20C		Propshaft	PS901433
	2013.11-2015.02		Centre	Coupe 4WD N47D20C		Center Bearing Support	538672
	2013.11-2015.02		Front	Coupe 4WD N47D20C		Flexible Coupling	537625
	2013.11-2015.02		Front;Rear	Coupe 4WD N47D20C		Flexible Coupling	517955
	2013.11-2015.02		Front	Coupe 4WD N47D20C		Flexible Coupling Kit	537625S
	2013.11-2015.02		Front;Rear	Coupe 4WD N47D20C		Flexible Coupling Kit	517955S
2.0 (140 kw)	2015.03-2020.06	AT	Rear	Coupe 4WD B47D20A	Date to:2015.07	Propshaft	PS901433
	2015.03-2020.06		Centre	Coupe 4WD B47D20A		Center Bearing Support	538672
	2015.03-2020.06		Front	Coupe 4WD B47D20A		Flexible Coupling	510596
	2015.03-2020.06		Front	Coupe 4WD B47D20A		Flexible Coupling	537625
	2015.03-2020.06		Front	Coupe 4WD B47D20A	510596S and 537625S different structure	Flexible Coupling Kit	510596S
	2015.03-2020.06		Front	Coupe 4WD B47D20A	537625S and 510596S different structure	Flexible Coupling Kit	537625S
	2020.07-		Front	Coupe 4WD B47D20B		Flexible Coupling	537631
2.0 (147 kw)	2013.11-2015.02	AT	Rear	Coupe 4WD N47D20C		Propshaft	PS901433
	2013.11-2015.02		Centre	Coupe 4WD N47D20C		Center Bearing Support	538672
	2013.11-2015.02		Front	Coupe 4WD N47D20C		Flexible Coupling	537625
	2013.11-2015.02		Front;Rear	Coupe 4WD N47D20C		Flexible Coupling	517955
	2013.11-2015.02		Front	Coupe 4WD N47D20C		Flexible Coupling Kit	537625S
	2013.11-2015.02		Front;Rear	Coupe 4WD N47D20C		Flexible Coupling Kit	517955S
420d xDrive Gran Coupe							
2.0 (120 kw)	2014.03-2020.12	AT	Rear	Coupe 4WD B47D20A/N47D20C	Date to:2015.07	Propshaft	PS901433
	2014.03-2020.12		Centre	Coupe 4WD B47D20A/N47D20C		Center Bearing Support	538672
	2014.03-2020.12		Front	Coupe 4WD B47D20A/N47D20C		Flexible Coupling	510596
	2014.03-2020.12		Front	Coupe 4WD B47D20A/N47D20C		Flexible Coupling	537625
	2014.03-2020.12		Front;Rear	Coupe 4WD B47D20A/N47D20C		Flexible Coupling	517955
	2014.03-2020.12		Front	Coupe 4WD B47D20A/N47D20C	510596S and 537625S different structure	Flexible Coupling Kit	510596S
	2014.03-2020.12		Front	Coupe 4WD B47D20A/N47D20C	537625S and 510596S different structure	Flexible Coupling Kit	537625S
	2014.03-2020.12		Front;Rear	Coupe 4WD B47D20A/N47D20C		Flexible Coupling Kit	517955S

	YEAR	TRANSM.	FITTING POSITION	BODY STYLE & DRIVE TYPE & ENGINE	REMARKS	PRODUCT	GSP Ref.
BMW							
420d xDrive Gran Coupe							
2.0 (135 kw)	2014.03-2015.02	AT	Rear	Coupe 4WD N47D20C		Propshaft	PS901433
	2014.03-2015.02		Centre	Coupe 4WD N47D20C		Center Bearing Support	538672
	2014.03-2015.02		Front	Coupe 4WD N47D20C		Flexible Coupling	537625
	2014.03-2015.02		Front;Rear	Coupe 4WD N47D20C		Flexible Coupling	517955
	2014.03-2015.02		Front	Coupe 4WD N47D20C		Flexible Coupling Kit	537625S
	2014.03-2015.02		Front;Rear	Coupe 4WD N47D20C		Flexible Coupling Kit	517955S
2.0 (140 kw)	2015.03-2020.12	AT	Rear	Coupe 4WD B47D20A	Date to:2015.07	Propshaft	PS901433
	2015.03-2020.12		Centre	Coupe 4WD B47D20A		Center Bearing Support	538672
	2015.03-2020.12		Front	Coupe 4WD B47D20A		Flexible Coupling	510596
	2015.03-2020.12		Front	Coupe 4WD B47D20A		Flexible Coupling	537625
	2015.03-2020.12		Front;Rear	Coupe 4WD B47D20A		Flexible Coupling	517955
	2015.03-2020.12		Front	Coupe 4WD B47D20A	510596S and 537625S different structure	Flexible Coupling Kit	510596S
	2015.03-2020.12		Front	Coupe 4WD B47D20A	537625S and 510596S different structure	Flexible Coupling Kit	537625S
	2015.03-2020.12		Front;Rear	Coupe 4WD B47D20A		Flexible Coupling Kit	517955S
	2021.07-		Centre	Coupe 4WD B47D20B		Center Bearing Support	538640
	2021.07-		Front	Coupe 4WD B47D20B		Flexible Coupling	537631
	2021.07-		Front	Coupe 4WD B47D20B		Flexible Coupling Kit	537631S
2.0 (147 kw)	2014.03-2015.02	AT	Rear	Coupe 4WD N47D20C		Propshaft	PS901433
	2014.03-2015.02		Centre	Coupe 4WD N47D20C		Center Bearing Support	538672
	2014.03-2015.02		Front	Coupe 4WD N47D20C		Flexible Coupling	537625
	2014.03-2015.02		Front;Rear	Coupe 4WD N47D20C		Flexible Coupling	517955
	2014.03-2015.02		Front	Coupe 4WD N47D20C		Flexible Coupling Kit	537625S
	2014.03-2015.02		Front;Rear	Coupe 4WD N47D20C		Flexible Coupling Kit	517955S
420i Cabrio							
2.0 (120 kw)	2014.07-2016.02	AT	Rear	Cabriolet RWD N20B20B		Propshaft	PS901432
	2014.07-2016.02		Centre	Cabriolet RWD N20B20B		Center Bearing Support	538672
	2014.07-2016.02		Front	Cabriolet RWD N20B20B	AT,Inner diameter:50mm,510596 and 537625 different structure	Flexible Coupling	510596
	2014.07-2016.02		Front	Cabriolet RWD N20B20B	MT,Inner diameter:38.5mm	Flexible Coupling	510597
	2014.07-2016.02		Front	Cabriolet RWD N20B20B	AT,Inner diameter:50mm,510596 and 537625 different structure	Flexible Coupling	537625
	2014.07-2016.02		Front	Cabriolet RWD N20B20B	Inner diameter:50mm,510596S and 537625S different structure	Flexible Coupling Kit	510596S
	2014.07-2016.02		Front	Cabriolet RWD N20B20B	Inner diameter:38.5mm	Flexible Coupling Kit	510597S
	2014.07-2016.02		Front	Cabriolet RWD N20B20B	Inner diameter:50mm,537625S and 510596S different structure	Flexible Coupling Kit	537625S
	2016.03-2020.07		Centre	Cabriolet RWD B48B20A		Center Bearing Support	538672
	2016.03-2020.07		Front	Cabriolet RWD B48B20A		Flexible Coupling	510596
	2016.03-2020.07		Front	Cabriolet RWD B48B20A		Flexible Coupling	537625
	2016.03-2020.07		Front	Cabriolet RWD B48B20A		Flexible Coupling Kit	537625S
2.0 (135 kw)	2014.07-2016.02	AT	Rear	Cabriolet RWD N20B20B		Propshaft	PS901432
	2014.07-2016.02		Centre	Cabriolet RWD N20B20B		Center Bearing Support	538672
	2014.07-2016.02		Front	Cabriolet RWD N20B20B		Flexible Coupling	510596
	2014.07-2016.02		Front	Cabriolet RWD N20B20B		Flexible Coupling	510597
	2014.07-2016.02		Front	Cabriolet RWD N20B20B		Flexible Coupling	537625
	2014.07-2016.02		Front	Cabriolet RWD N20B20B	Inner diameter:50mm,510596S and 537625S different structure	Flexible Coupling Kit	510596S
	2014.07-2016.02		Front	Cabriolet RWD N20B20B	Inner diameter:38.5mm	Flexible Coupling Kit	510597S
	2014.07-2016.02		Front	Cabriolet RWD N20B20B	Inner diameter:50mm,537625S and 510596S different structure	Flexible Coupling Kit	537625S
	2016.03-2020.07		Centre	Cabriolet RWD B48B20A		Center Bearing Support	538672
	2016.03-2020.07		Front	Cabriolet RWD B48B20A		Flexible Coupling	510596
	2016.03-2020.07		Front	Cabriolet RWD B48B20A		Flexible Coupling	537625
	2016.03-2020.07		Front	Cabriolet RWD B48B20A		Flexible Coupling Kit	510596S
	2016.03-2020.07		Front	Cabriolet RWD B48B20A		Flexible Coupling Kit	537625S
	2020.11-		Front	Cabriolet RWD B48B20A	Width:30mm	Flexible Coupling	510596
420i Coupe							
1.6 (125 kw)	2020.11-		Front	Coupe RWD B48B16A	Width:30mm	Flexible Coupling	510596
2.0 (120 kw)	2013.11-2017.02	AT	Rear	Coupe RWD N20B20A/N20B20B	Model year to:2016	Propshaft	PS901432
	2013.11-2017.02		Centre	Coupe RWD N20B20A/N20B20B		Center Bearing Support	538672
	2013.11-2017.02		Front	Coupe RWD N20B20A/N20B20B	AT,Inner diameter:50mm,510596 and 537625 different structure	Flexible Coupling	510596
	2013.11-2017.02		Front	Coupe RWD N20B20A/N20B20B	MT,Inner diameter:38.5mm	Flexible Coupling	510597
	2013.11-2017.02		Front	Coupe RWD N20B20A/N20B20B	AT,Inner diameter:50mm,510596 and 537625 different structure	Flexible Coupling	537625
	2013.11-2017.02		Front	Coupe RWD N20B20A/N20B20B	Inner diameter:50mm,510596S and 537625S different structure	Flexible Coupling Kit	510596S
	2013.11-2017.02		Front	Coupe RWD N20B20A/N20B20B	Inner diameter:38.5mm	Flexible Coupling Kit	510597S
	2013.11-2017.02		Front	Coupe RWD N20B20A/N20B20B	Inner diameter:50mm,537625S and 510596S different structure	Flexible Coupling Kit	537625S
	2016.03-2020.06	AT	Rear	Coupe RWD B48B20A	Model year to:2017	Propshaft	PS901431
	2016.03-2020.06		Centre	Coupe RWD B48B20A		Center Bearing Support	538672
	2016.03-2020.06		Front	Coupe RWD B48B20A		Flexible Coupling	510596
	2016.03-2020.06		Front	Coupe RWD B48B20A		Flexible Coupling	537625

	YEAR	TRANSM.	FITTING POSITION	BODY STYLE & DRIVE TYPE & ENGINE	REMARKS	PRODUCT	GSP Ref.
BMW							
420i Coupe							
2.0 (120 kw)	2016.03-2020.06		Front	Coupe RWD B48B20A		Flexible Coupling Kit	537625S
2.0 (135 kw)	2013.11-2017.02	AT	Rear	Coupe RWD N20B20A/N20B20B	Model year to:2016	Propshaft	PS901432
	2013.11-2017.02		Centre	Coupe RWD N20B20A/N20B20B		Center Bearing Support	538672
	2013.11-2017.02		Front	Coupe RWD N20B20A/N20B20B		Flexible Coupling	510596
	2013.11-2017.02		Front	Coupe RWD N20B20A/N20B20B		Flexible Coupling	510597
	2013.11-2017.02		Front	Coupe RWD N20B20A/N20B20B		Flexible Coupling	537625
	2013.11-2017.02		Front	Coupe RWD N20B20A/N20B20B	Inner diameter:50mm,510596S and 537625S different structure	Flexible Coupling Kit	510596S
	2013.11-2017.02		Front	Coupe RWD N20B20A/N20B20B	Inner diameter:38.5mm	Flexible Coupling Kit	510597S
	2013.11-2017.02		Front	Coupe RWD N20B20A/N20B20B	Inner diameter:50mm,537625S and 510596S different structure	Flexible Coupling Kit	537625S
	2016.03-2020.06	AT	Rear	Coupe RWD B48B20A	Model year to:2017	Propshaft	PS901431
	2016.03-2020.06		Centre	Coupe RWD B48B20A		Center Bearing Support	538672
	2016.03-2020.06		Front	Coupe RWD B48B20A		Flexible Coupling	510596
	2016.03-2020.06		Front	Coupe RWD B48B20A		Flexible Coupling	537625
	2016.03-2020.06		Front	Coupe RWD B48B20A		Flexible Coupling Kit	510596S
	2016.03-2020.06		Front	Coupe RWD B48B20A		Flexible Coupling Kit	537625S
	2020.07-		Front	Coupe RWD B46B20B/B48B20A	Width:30mm	Flexible Coupling	510596
420i Gran Coupe							
2.0 (120 kw)	2014.03-2017.02	AT	Rear	Coupe RWD N20B20B	Model year to:2016	Propshaft	PS901432
	2014.03-2017.02		Centre	Coupe RWD N20B20B		Center Bearing Support	538672
	2014.03-2017.02		Front	Coupe RWD N20B20B		Flexible Coupling	510596
	2014.03-2017.02		Front	Coupe RWD N20B20B		Flexible Coupling	537625
	2014.03-2017.02		Front	Coupe RWD N20B20B		Flexible Coupling Kit	510596S
	2014.03-2017.02		Front	Coupe RWD N20B20B		Flexible Coupling Kit	537625S
	2016.03-2021.05	AT	Rear	Coupe RWD B48B20A	Model year to:2017	Propshaft	PS901431
	2016.03-2021.05		Centre	Coupe RWD B48B20A		Center Bearing Support	538672
	2016.03-2021.05		Front	Coupe RWD B48B20A		Flexible Coupling	510596
	2016.03-2021.05		Front	Coupe RWD B48B20A		Flexible Coupling	537625
	2016.03-2021.05		Front	Coupe RWD B48B20A		Flexible Coupling Kit	537625S
2.0 (135 kw)	2014.03-2017.02	AT	Rear	Coupe RWD N20B20B	Model year to:2016	Propshaft	PS901432
	2014.03-2017.02		Centre	Coupe RWD N20B20B		Center Bearing Support	538672
	2014.03-2017.02		Front	Coupe RWD N20B20B		Flexible Coupling	510596
	2014.03-2017.02		Front	Coupe RWD N20B20B		Flexible Coupling	537625
	2014.03-2017.02		Front	Coupe RWD N20B20B		Flexible Coupling Kit	510596S
	2014.03-2017.02		Front	Coupe RWD N20B20B		Flexible Coupling Kit	537625S
	2016.03-2021.05	AT	Rear	Coupe RWD B48B20A	Model year to:2017	Propshaft	PS901431
	2016.03-2021.05		Centre	Coupe RWD B48B20A		Center Bearing Support	538672
	2016.03-2021.05		Front	Coupe RWD B48B20A		Flexible Coupling	510596
	2016.03-2021.05		Front	Coupe RWD B48B20A		Flexible Coupling	537625
	2016.03-2021.05		Front	Coupe RWD B48B20A		Flexible Coupling Kit	510596S
	2016.03-2021.05		Front	Coupe RWD B48B20A		Flexible Coupling Kit	537625S
	2021.07-		Front	Coupe RWD B46B20B/B48B20A	Width:30mm	Flexible Coupling	510596
420i xDrive Coupe							
2.0 (120 kw)	2013.11-2016.02	AT	Rear	Coupe 4WD N20B20B	Date to:2015.07	Propshaft	PS901433
	2013.11-2016.02		Centre	Coupe 4WD N20B20B		Center Bearing Support	538672
	2013.11-2016.02		Front	Coupe 4WD N20B20B		Flexible Coupling	510596
	2013.11-2016.02		Front	Coupe 4WD N20B20B		Flexible Coupling	537625
	2013.11-2016.02		Front;Rear	Coupe 4WD N20B20B		Flexible Coupling	517955
	2013.11-2016.02		Front	Coupe 4WD N20B20B	510596S and 537625S different structure	Flexible Coupling Kit	510596S
	2013.11-2016.02		Front	Coupe 4WD N20B20B	537625S and 510596S different structure	Flexible Coupling Kit	537625S
	2013.11-2016.02		Front;Rear	Coupe 4WD N20B20B		Flexible Coupling Kit	517955S
	2016.03-2020.06		Centre	Coupe 4WD B48B20A		Center Bearing Support	538672
	2016.03-2020.06		Front	Coupe 4WD B48B20A		Flexible Coupling	510596
	2016.03-2020.06		Front	Coupe 4WD B48B20A		Flexible Coupling	537625
	2016.03-2020.06		Front	Coupe 4WD B48B20A	510596S and 537625S different structure	Flexible Coupling Kit	510596S
	2016.03-2020.06		Front	Coupe 4WD B48B20A	537625S and 510596S different structure	Flexible Coupling Kit	537625S
2.0 (135 kw)	2013.11-2016.02	AT	Rear	Coupe 4WD N20B20B	Date to:2015.07	Propshaft	PS901433
	2013.11-2016.02		Centre	Coupe 4WD N20B20B		Center Bearing Support	538672
	2013.11-2016.02		Front	Coupe 4WD N20B20B		Flexible Coupling	510596
	2013.11-2016.02		Front	Coupe 4WD N20B20B		Flexible Coupling	537625
	2013.11-2016.02		Front;Rear	Coupe 4WD N20B20B		Flexible Coupling	517955
	2013.11-2016.02		Front	Coupe 4WD N20B20B	510596S and 537625S different structure	Flexible Coupling Kit	510596S
	2013.11-2016.02		Front	Coupe 4WD N20B20B	537625S and 510596S different structure	Flexible Coupling Kit	537625S
	2013.11-2016.02		Front;Rear	Coupe 4WD N20B20B		Flexible Coupling Kit	517955S
	2016.03-2020.06		Centre	Coupe 4WD B48B20A		Center Bearing Support	538672

	YEAR	TRANSM.	FITTING POSITION	BODY STYLE & DRIVE TYPE & ENGINE	REMARKS	PRODUCT	GSP Ref.
BMW							
420i xDrive Coupe							
2.0 (135 kw)	2016.03-2020.06		Front	Coupe 4WD B48B20A		Flexible Coupling	510596
	2016.03-2020.06		Front	Coupe 4WD B48B20A		Flexible Coupling	537625
	2016.03-2020.06		Front	Coupe 4WD B48B20A	510596S and 537625S different structure	Flexible Coupling Kit	510596S
	2016.03-2020.06		Front	Coupe 4WD B48B20A	537625S and 510596S different structure	Flexible Coupling Kit	537625S
	2021.07-		Centre	Coupe 4WD B48B20A		Center Bearing Support	538640
	2021.07-		Front	Coupe 4WD B48B20A		Flexible Coupling	537631
420i xDrive Gran Coupe							
2.0 (120 kw)	2014.03-2016.02	AT	Rear	Coupe 4WD N20B20B	Date to:2015.07	Propshaft	PS901433
	2014.03-2016.02		Centre	Coupe 4WD N20B20B		Center Bearing Support	538672
	2014.03-2016.02		Front	Coupe 4WD N20B20B		Flexible Coupling	510596
	2014.03-2016.02		Front	Coupe 4WD N20B20B		Flexible Coupling	537625
	2014.03-2016.02		Front;Rear	Coupe 4WD N20B20B		Flexible Coupling	517955
	2014.03-2016.02		Front	Coupe 4WD N20B20B	510596S and 537625S different structure	Flexible Coupling Kit	510596S
	2014.03-2016.02		Front	Coupe 4WD N20B20B	537625S and 510596S different structure	Flexible Coupling Kit	537625S
	2014.03-2016.02		Front;Rear	Coupe 4WD N20B20B		Flexible Coupling Kit	517955S
	2016.03-2021.05		Centre	Coupe 4WD B48B20A		Center Bearing Support	538672
	2016.03-2021.05		Front	Coupe 4WD B48B20A		Flexible Coupling	510596
	2016.03-2021.05		Front	Coupe 4WD B48B20A		Flexible Coupling	537625
	2016.03-2021.05		Front	Coupe 4WD B48B20A	510596S and 537625S different structure	Flexible Coupling Kit	510596S
	2016.03-2021.05		Front	Coupe 4WD B48B20A	537625S and 510596S different structure	Flexible Coupling Kit	537625S
2.0 (135 kw)	2014.07-2016.02	AT	Rear	Coupe 4WD N20B20B	Date to:2015.07	Propshaft	PS901433
	2014.07-2016.02		Centre	Coupe 4WD N20B20B		Center Bearing Support	538672
	2014.07-2016.02		Front	Coupe 4WD N20B20B		Flexible Coupling	510596
	2014.07-2016.02		Front	Coupe 4WD N20B20B		Flexible Coupling	537625
	2014.07-2016.02		Front;Rear	Coupe 4WD N20B20B		Flexible Coupling	517955
	2014.07-2016.02		Front	Coupe 4WD N20B20B	510596S and 537625S different structure	Flexible Coupling Kit	510596S
	2014.07-2016.02		Front	Coupe 4WD N20B20B	537625S and 510596S different structure	Flexible Coupling Kit	537625S
	2014.07-2016.02		Front;Rear	Coupe 4WD N20B20B		Flexible Coupling Kit	517955S
	2016.03-2021.05		Centre	Coupe 4WD B48B20A		Center Bearing Support	538672
	2016.03-2021.05		Front	Coupe 4WD B48B20A		Flexible Coupling	510596
	2016.03-2021.05		Front	Coupe 4WD B48B20A		Flexible Coupling	537625
	2016.03-2021.05		Front	Coupe 4WD B48B20A	510596S and 537625S different structure	Flexible Coupling Kit	510596S
	2016.03-2021.05		Front	Coupe 4WD B48B20A	537625S and 510596S different structure	Flexible Coupling Kit	537625S
425d Cabrio							
2.0 (155 kw)	2014.07-2016.02		Front;Rear	Cabriolet RWD N47D20D		Flexible Coupling	517955
	2014.07-2016.02		Front;Rear	Cabriolet RWD N47D20D		Flexible Coupling Kit	517955S
2.0 (160 kw)	2014.07-2016.02		Centre	Cabriolet RWD N47D20D		Center Bearing Support	538664
	2014.07-2016.02		Front	Cabriolet RWD N47D20D		Flexible Coupling	510596
	2014.07-2016.02		Front;Rear	Cabriolet RWD N47D20D		Flexible Coupling	517955
	2014.07-2016.02		Front	Cabriolet RWD N47D20D		Flexible Coupling Kit	537669S
	2014.07-2016.02		Front;Rear	Cabriolet RWD N47D20D		Flexible Coupling Kit	517955S
2.0 (165 kw)	2016.03-2018.02		Centre	Cabriolet RWD B47D20B		Center Bearing Support	538664
	2016.03-2018.02		Front;Rear	Cabriolet RWD B47D20B		Flexible Coupling	517955
	2016.03-2018.02		Front;Rear	Cabriolet RWD B47D20B		Flexible Coupling Kit	517955S
425d Coupe							
2.0 (155 kw)	2014.03-2016.02	AT	Rear	Coupe RWD N47D20D		Propshaft	PS901499
	2014.03-2016.02		Centre	Coupe RWD N47D20D	MT	Center Bearing Support	538664
	2014.03-2016.02		Centre	Coupe RWD N47D20D	AT	Center Bearing Support	539904
2.0 (160 kw)	2014.03-2016.02	AT	Rear	Coupe RWD N47D20D		Propshaft	PS901499
	2014.03-2016.02		Centre	Coupe RWD N47D20D	MT	Center Bearing Support	538664
	2014.03-2016.02		Centre	Coupe RWD N47D20D	AT	Center Bearing Support	539904
	2014.03-2016.02		Front;Rear	Coupe RWD N47D20D		Flexible Coupling	517955
	2014.03-2016.02		Front	Coupe RWD N47D20D		Flexible Coupling Kit	537669S
	2014.03-2016.02		Front;Rear	Coupe RWD N47D20D		Flexible Coupling Kit	517955S
2.0 (165 kw)	2016.03-2017.10		Centre	Coupe RWD B47D20B		Center Bearing Support	538664
425d Gran Coupe							
2.0 (155 kw)	2016.03-2018.02		Centre	Coupe RWD B47D20B		Center Bearing Support	538664
	2016.03-2018.02		Front;Rear	Coupe RWD B47D20B		Flexible Coupling	517955
	2016.03-2018.02		Front;Rear	Coupe RWD B47D20B		Flexible Coupling Kit	517955S
2.0 (165 kw)	2016.03-2018.02		Centre	Coupe RWD B47D20B		Center Bearing Support	538664
	2016.03-2018.02		Front	Coupe RWD B47D20B		Flexible Coupling	510596
	2016.03-2018.02		Front;Rear	Coupe RWD B47D20B		Flexible Coupling	517955
	2016.03-2018.02		Front;Rear	Coupe RWD B47D20B		Flexible Coupling Kit	517955S

	YEAR	TRANSM.	FITTING POSITION	BODY STYLE & DRIVE TYPE & ENGINE	REMARKS	PRODUCT	GSP Ref.
BMW							
428i Cabrio							
2.0 (180 kw)	2013.11-2017.02	8AT	Rear	Cabriolet RWD N20B20A/N26B20A		Propshaft	PS900126
	2013.11-2017.02		Centre	Cabriolet RWD N20B20A/N26B20A		Center Bearing Support	538672
	2013.11-2017.02		Front	Cabriolet RWD N20B20A/N26B20A		Flexible Coupling	510596
	2013.11-2017.02		Front	Cabriolet RWD N20B20A/N26B20A		Flexible Coupling	537625
	2013.11-2017.02		Front	Cabriolet RWD N20B20A/N26B20A		Flexible Coupling Kit	510596S
	2013.11-2017.02		Front	Cabriolet RWD N20B20A/N26B20A		Flexible Coupling Kit	537625S
428i Coupe							
2.0 (180 kw)	2013.07-2017.12	8AT	Rear	Coupe RWD N20B20A/N26B20A		Propshaft	PS900126
	2013.07-2017.12		Centre	Coupe RWD N20B20A/N26B20A		Center Bearing Support	538672
	2013.07-2017.12		Front	Coupe RWD N20B20A/N26B20A		Flexible Coupling	510596
	2013.07-2017.12		Front	Coupe RWD N20B20A/N26B20A		Flexible Coupling	537625
	2013.07-2017.12		Front	Coupe RWD N20B20A/N26B20A		Flexible Coupling Kit	510596S
	2013.07-2017.12		Front	Coupe RWD N20B20A/N26B20A		Flexible Coupling Kit	537625S
428i Gran Coupe							
2.0 (180 kw)	2014.03-2016.02		Centre	Coupe RWD N20B20A		Center Bearing Support	538672
	2014.03-2016.02		Front	Coupe RWD N20B20A		Flexible Coupling	510596
	2014.03-2016.02		Front	Coupe RWD N20B20A		Flexible Coupling	537625
	2014.03-2016.02		Front	Coupe RWD N20B20A		Flexible Coupling Kit	510596S
	2014.03-2016.02		Front	Coupe RWD N20B20A		Flexible Coupling Kit	537625S
428i xDrive Cabrio							
2.0 (180 kw)	2014.03-2016.02		Centre	Cabriolet 4WD N20B20A		Center Bearing Support	538672
	2014.03-2016.02		Front	Cabriolet 4WD N20B20A		Flexible Coupling	510596
	2014.03-2016.02		Front	Cabriolet 4WD N20B20A		Flexible Coupling	537625
	2014.03-2016.02		Front;Rear	Cabriolet 4WD N20B20A		Flexible Coupling	517955
	2014.03-2016.02		Front	Cabriolet 4WD N20B20A	510596S and 537625S different structure	Flexible Coupling Kit	510596S
	2014.03-2016.02		Front	Cabriolet 4WD N20B20A	537625S and 510596S different structure	Flexible Coupling Kit	537625S
	2014.03-2016.02		Front;Rear	Cabriolet 4WD N20B20A		Flexible Coupling Kit	517955S
428i xDrive Coupe							
2.0 (180 kw)	2013.07-2016.02		Centre	Coupe 4WD N20B20A		Center Bearing Support	538672
	2013.07-2016.02		Front	Coupe 4WD N20B20A		Flexible Coupling	510596
	2013.07-2016.02		Front	Coupe 4WD N20B20A		Flexible Coupling	537625
	2013.07-2016.02		Front;Rear	Coupe 4WD N20B20A		Flexible Coupling	517955
	2013.07-2016.02		Front	Coupe 4WD N20B20A	510596S and 537625S different structure	Flexible Coupling Kit	510596S
	2013.07-2016.02		Front	Coupe 4WD N20B20A	537625S and 510596S different structure	Flexible Coupling Kit	537625S
	2013.07-2016.02		Front;Rear	Coupe 4WD N20B20A		Flexible Coupling Kit	517955S
428i xDrive Gran Coupe							
2.0 (180 kw)	2014.03-2016.02		Centre	Coupe 4WD N20B20A		Center Bearing Support	538672
	2014.03-2016.02		Front	Coupe 4WD N20B20A		Flexible Coupling	510596
	2014.03-2016.02		Front	Coupe 4WD N20B20A		Flexible Coupling	537625
	2014.03-2016.02		Front;Rear	Coupe 4WD N20B20A		Flexible Coupling	517955
	2014.03-2016.02		Front	Coupe 4WD N20B20A	510596S and 537625S different structure	Flexible Coupling Kit	510596S
	2014.03-2016.02		Front	Coupe 4WD N20B20A	537625S and 510596S different structure	Flexible Coupling Kit	537625S
	2014.03-2016.02		Front;Rear	Coupe 4WD N20B20A		Flexible Coupling Kit	517955S
430d Cabrio							
3.0 (190 kw)	2014.07-2020.07	AT	Rear	Cabriolet RWD N57D30A		Propshaft	PS901497
	2014.07-2020.07		Front;Rear	Cabriolet RWD N57D30A		Flexible Coupling	517955
	2014.07-2020.07		Front	Cabriolet RWD N57D30A		Flexible Coupling Kit	537669S
	2014.07-2020.07		Front;Rear	Cabriolet RWD N57D30A		Flexible Coupling Kit	517955S
3.0 (210 kw)	2014.07-2020.07		Rear	Cabriolet RWD N57D30A		Propshaft	PS901497
	2014.07-2020.07		Front;Rear	Cabriolet RWD N57D30A		Flexible Coupling	517955
	2014.07-2020.07		Front	Cabriolet RWD N57D30A		Flexible Coupling Kit	537669S
	2014.07-2020.07		Front;Rear	Cabriolet RWD N57D30A		Flexible Coupling Kit	517955S
430d Coupe							
3.0 (190 kw)	2013.11-2020.06	AT	Rear	Coupe RWD N57D30A		Propshaft	PS901497
	2013.11-2020.06		Front;Rear	Coupe RWD N57D30A		Flexible Coupling	517955
	2013.11-2020.06		Front	Coupe RWD N57D30A		Flexible Coupling Kit	537669S
	2013.11-2020.06		Front;Rear	Coupe RWD N57D30A		Flexible Coupling Kit	517955S
3.0 (210 kw)	2013.11-2020.06	AT	Rear	Coupe RWD N57D30A		Propshaft	PS901497
	2013.11-2020.06		Front;Rear	Coupe RWD N57D30A		Flexible Coupling	517955
	2013.11-2020.06		Front	Coupe RWD N57D30A		Flexible Coupling Kit	537669S
	2013.11-2020.06		Front;Rear	Coupe RWD N57D30A		Flexible Coupling Kit	517955S
430d Gran Coupe							
3.0 (190 kw)	2014.07-2020.12	AT	Rear	Coupe RWD N57D30A		Propshaft	PS901497
	2014.07-2020.12		Front;Rear	Coupe RWD N57D30A		Flexible Coupling	517955

	YEAR	TRANSM.	FITTING POSITION	BODY STYLE & DRIVE TYPE & ENGINE	REMARKS	PRODUCT	GSP Ref.
BMW							
430d Gran Coupe							
3.0 (190 kw)	2014.07-2020.12		Front	Coupe RWD N57D30A		Flexible Coupling Kit	537669S
	2014.07-2020.12		Front;Rear	Coupe RWD N57D30A		Flexible Coupling Kit	517955S
3.0 (210 kw)	2014.07-2020.12	AT	Rear	Coupe RWD N57D30A		Propshaft	PS901497
	2014.07-2020.12		Front;Rear	Coupe RWD N57D30A		Flexible Coupling	517955
	2014.07-2020.12		Front	Coupe RWD N57D30A		Flexible Coupling Kit	537669S
	2014.07-2020.12		Front;Rear	Coupe RWD N57D30A		Flexible Coupling Kit	517955S
430d xDrive Coupe							
3.0 (190 kw)	2014.03-2020.06	AT/MT	Front	Coupe 4WD N57D30A		Propshaft	PS900112
	2014.03-2020.06	AT	Rear	Coupe 4WD N57D30A	For Modelcode:F32	Propshaft	PS900627
	2014.03-2020.06		Front	Coupe 4WD N57D30A		Flexible Coupling	510596
	2014.03-2020.06		Front;Rear	Coupe 4WD N57D30A		Flexible Coupling	517955
	2014.03-2020.06		Front	Coupe 4WD N57D30A		Flexible Coupling Kit	537669S
	2014.03-2020.06		Front;Rear	Coupe 4WD N57D30A		Flexible Coupling Kit	517955S
3.0 (210 kw)	2014.03-2020.06	AT/MT	Front	Coupe 4WD N57D30A		Propshaft	PS900112
	2014.03-2020.06	AT	Rear	Coupe 4WD N57D30A	For Modelcode:F32	Propshaft	PS900627
	2014.03-2020.06		Front	Coupe 4WD N57D30A		Flexible Coupling	510596
	2014.03-2020.06		Front;Rear	Coupe 4WD N57D30A		Flexible Coupling	517955
	2014.03-2020.06		Front	Coupe 4WD N57D30A		Flexible Coupling Kit	537669S
	2014.03-2020.06		Front;Rear	Coupe 4WD N57D30A		Flexible Coupling Kit	517955S
	2021.03-		Front	Coupe 4WD B57D30B		Flexible Coupling	537631
430d xDrive Gran Coupe							
3.0 (190 kw)	2014.07-2020.12	AT/MT	Front	Coupe 4WD N57D30A		Propshaft	PS900112
	2014.07-2020.12	AT	Rear	Coupe 4WD N57D30A		Propshaft	PS900627
	2014.07-2020.12		Front	Coupe 4WD N57D30A		Flexible Coupling	510596
	2014.07-2020.12		Front;Rear	Coupe 4WD N57D30A		Flexible Coupling	517955
	2014.07-2020.12		Front	Coupe 4WD N57D30A		Flexible Coupling Kit	537669S
	2014.07-2020.12		Front;Rear	Coupe 4WD N57D30A		Flexible Coupling Kit	517955S
3.0 (210 kw)	2014.07-2020.12	AT/MT	Front	Coupe 4WD N57D30A		Propshaft	PS900112
	2014.07-2020.12	AT	Rear	Coupe 4WD N57D30A		Propshaft	PS900627
	2014.07-2020.12		Front	Coupe 4WD N57D30A		Flexible Coupling	510596
	2014.07-2020.12		Front;Rear	Coupe 4WD N57D30A		Flexible Coupling	517955
	2014.07-2020.12		Front	Coupe 4WD N57D30A		Flexible Coupling Kit	537669S
	2014.07-2020.12		Front;Rear	Coupe 4WD N57D30A		Flexible Coupling Kit	517955S
	2022.05-		Front	Coupe 4WD B57D30B		Flexible Coupling	510596
430i Cabrio							
2.0 (180 kw)	2021.07-		Front	Cabriolet RWD B48B20B	Width:30mm	Flexible Coupling	510596
2.0 (185 kw)	2016.03-2020.07		Centre	Cabriolet RWD B48B20B		Center Bearing Support	538672
	2016.03-2020.07		Front	Cabriolet RWD B48B20B		Flexible Coupling	510596
	2016.03-2020.07		Front	Cabriolet RWD B48B20B		Flexible Coupling	537625
	2016.03-2020.07		Front	Cabriolet RWD B48B20B		Flexible Coupling Kit	510596S
	2016.03-2020.07		Front	Cabriolet RWD B48B20B		Flexible Coupling Kit	537625S
2.0 (190 kw)	2020.11-		Front	Cabriolet RWD B48B20B	Width:30mm	Flexible Coupling	510596
430i Coupe							
2.0 (180 kw)	2021.07-		Front	Coupe RWD B46B20B/B48B20B	Width:30mm	Flexible Coupling	510596
2.0 (185 kw)	2016.03-2020.06		Centre	Coupe RWD B46B20B/B48B20B		Center Bearing Support	538672
	2016.03-2020.06		Front	Coupe RWD B46B20B/B48B20B		Flexible Coupling	510596
	2016.03-2020.06		Front	Coupe RWD B46B20B/B48B20B		Flexible Coupling	537625
	2016.03-2020.06		Front	Coupe RWD B46B20B/B48B20B		Flexible Coupling Kit	510596S
	2016.03-2020.06		Front	Coupe RWD B46B20B/B48B20B		Flexible Coupling Kit	537625S
2.0 (190 kw)	2020.07-		Front	Coupe RWD B46B20B/B48B20B	Width:30mm	Flexible Coupling	510596
430i Gran Coupe							
2.0 (180 kw)	2021.07-		Centre	Coupe RWD B48B20B		Center Bearing Support	538640
	2021.07-		Front	Coupe RWD B48B20B	Width:30mm	Flexible Coupling	510596
2.0 (185 kw)	2016.03-2021.05		Centre	Coupe RWD B48B20B		Center Bearing Support	538672
	2016.03-2021.05		Front	Coupe RWD B48B20B		Flexible Coupling	510596
	2016.03-2021.05		Front	Coupe RWD B48B20B		Flexible Coupling	537625
	2016.03-2021.05		Front	Coupe RWD B48B20B		Flexible Coupling Kit	510596S
	2016.03-2021.05		Front	Coupe RWD B48B20B		Flexible Coupling Kit	537625S
430i xDrive Cabrio							
2.0 (180 kw)	2021.07-		Front	Cabriolet 4WD B48B20B		Flexible Coupling	537631
2.0 (185 kw)	2016.03-2020.07		Centre	Cabriolet 4WD B48B20B		Center Bearing Support	538672
	2016.03-2020.07		Front	Cabriolet 4WD B48B20B		Flexible Coupling	510596
	2016.03-2020.07		Front	Cabriolet 4WD B48B20B		Flexible Coupling	537625
	2016.03-2020.07		Front;Rear	Cabriolet 4WD B48B20B		Flexible Coupling	517955

	YEAR	TRANSM.	FITTING POSITION	BODY STYLE & DRIVE TYPE & ENGINE	REMARKS	PRODUCT	GSP Ref.
BMW							
430i xDrive Cabrio							
2.0 (185 kw)	2016.03-2020.07		Front	Cabriolet 4WD B48B20B		Flexible Coupling Kit	537625S
	2016.03-2020.07		Front;Rear	Cabriolet 4WD B48B20B		Flexible Coupling Kit	517955S
430i xDrive Coupe							
2.0 (180 kw)	2021.07-		Front	Coupe 4WD B48B20B		Flexible Coupling	537631
2.0 (185 kw)	2016.03-2020.06		Centre	Coupe 4WD B48B20B		Center Bearing Support	538672
	2016.03-2020.06		Front	Coupe 4WD B48B20B		Flexible Coupling	510596
	2016.03-2020.06		Front	Coupe 4WD B48B20B		Flexible Coupling	537625
	2016.03-2020.06		Front;Rear	Coupe 4WD B48B20B		Flexible Coupling	517955
	2016.03-2020.06		Front	Coupe 4WD B48B20B		Flexible Coupling Kit	537625S
	2016.03-2020.06		Front;Rear	Coupe 4WD B48B20B		Flexible Coupling Kit	517955S
2.0 (190 kw)	2021.07-		Front	Coupe 4WD B48B20B		Flexible Coupling	537631
430i xDrive Gran Coupe							
2 (190 kw)	2021.07-		Front	Coupe 4WD B46 B20 B		Flexible Coupling	537631
2.0 (180 kw)	2022.03-		Front	Coupe 4WD B48B20B		Flexible Coupling	537631
2.0 (185 kw)	2016.03-2021.05		Centre	Coupe 4WD B48B20B		Center Bearing Support	538672
	2016.03-2021.05		Front	Coupe 4WD B48B20B		Flexible Coupling	510596
	2016.03-2021.05		Front	Coupe 4WD B48B20B		Flexible Coupling	537625
	2016.03-2021.05		Front;Rear	Coupe 4WD B48B20B		Flexible Coupling	517955
	2016.03-2021.05		Front	Coupe 4WD B48B20B		Flexible Coupling Kit	537625S
435d xDrive Cabrio							
3.0 (230 kw)	2014.07-2020.07	AT/MT	Front	Cabriolet 4WD N57D30B		Propshaft	PS900112
	2014.07-2020.07	AT	Rear	Cabriolet 4WD N57D30B	For Modelcode:F33	Propshaft	PS900627
	2014.07-2020.07		Front	Cabriolet 4WD N57D30B		Flexible Coupling	510596
	2014.07-2020.07		Front;Rear	Cabriolet 4WD N57D30B		Flexible Coupling	517955
	2014.07-2020.07		Front	Cabriolet 4WD N57D30B		Flexible Coupling Kit	537669S
	2014.07-2020.07		Front;Rear	Cabriolet 4WD N57D30B		Flexible Coupling Kit	517955S
435d xDrive Coupe							
3.0 (230 kw)	2013.11-2020.06	AT/MT	Front	Coupe 4WD N57D30B		Propshaft	PS900112
	2013.11-2020.06	AT	Rear	Coupe 4WD N57D30B	For Modelcode:F32	Propshaft	PS900627
	2013.11-2020.06		Front	Coupe 4WD N57D30B		Flexible Coupling	510596
	2013.11-2020.06		Front;Rear	Coupe 4WD N57D30B		Flexible Coupling	517955
	2013.11-2020.06		Front	Coupe 4WD N57D30B		Flexible Coupling Kit	537669S
	2013.11-2020.06		Front;Rear	Coupe 4WD N57D30B		Flexible Coupling Kit	517955S
435d xDrive Gran Coupe							
3.0 (230 kw)	2014.07-2020.12	AT/MT	Front	Coupe 4WD N57D30B		Propshaft	PS900112
	2014.07-2020.12	AT	Rear	Coupe 4WD N57D30B		Propshaft	PS900627
	2014.07-2020.12		Front	Coupe 4WD N57D30B		Flexible Coupling	510596
	2014.07-2020.12		Front;Rear	Coupe 4WD N57D30B		Flexible Coupling	517955
	2014.07-2020.12		Front	Coupe 4WD N57D30B		Flexible Coupling Kit	537669S
	2014.07-2020.12		Front;Rear	Coupe 4WD N57D30B		Flexible Coupling Kit	517955S
435i Cabrio							
3.0 (225 kw)	2013.11-2016.02		Centre	Cabriolet RWD N55B30A	MT	Center Bearing Support	538664
	2013.11-2016.02		Centre	Cabriolet RWD N55B30A	AT	Center Bearing Support	538672
	2013.11-2016.02		Front;Rear	Cabriolet RWD N55B30A		Flexible Coupling	517955
	2013.11-2016.02		Front	Cabriolet RWD N55B30A		Flexible Coupling Kit	537669S
	2013.11-2016.02		Front;Rear	Cabriolet RWD N55B30A		Flexible Coupling Kit	517955S
3.0 (250 kw)	2013.11-2016.02		Centre	Cabriolet RWD N55B30A		Center Bearing Support	538664
	2013.11-2016.02		Front;Rear	Cabriolet RWD N55B30A		Flexible Coupling	517955
	2013.11-2016.02		Front	Cabriolet RWD N55B30A		Flexible Coupling Kit	537669S
	2013.11-2016.02		Front;Rear	Cabriolet RWD N55B30A		Flexible Coupling Kit	517955S
435i Coupe							
3.0 (225 kw)	2013.07-2016.02		Centre	Coupe RWD N55B30A	MT	Center Bearing Support	538664
	2013.07-2016.02		Centre	Coupe RWD N55B30A	AT	Center Bearing Support	538672
	2013.07-2016.02		Front;Rear	Coupe RWD N55B30A		Flexible Coupling	517955
	2013.07-2016.02		Front	Coupe RWD N55B30A		Flexible Coupling Kit	537669S
	2013.07-2016.02		Front;Rear	Coupe RWD N55B30A		Flexible Coupling Kit	517955S
3.0 (250 kw)	2013.07-2016.02		Centre	Coupe RWD N55B30A	MT	Center Bearing Support	538664
	2013.07-2016.02		Centre	Coupe RWD N55B30A	AT	Center Bearing Support	538672
	2013.07-2016.02		Front;Rear	Coupe RWD N55B30A		Flexible Coupling	517955
	2013.07-2016.02		Front	Coupe RWD N55B30A		Flexible Coupling Kit	537669S
	2013.07-2016.02		Front;Rear	Coupe RWD N55B30A		Flexible Coupling Kit	517955S
435i Gran Coupe							
3.0 (225 kw)	2014.03-2016.02		Centre	Coupe RWD N55B30A		Center Bearing Support	538672
	2014.03-2016.02		Front;Rear	Coupe RWD N55B30A		Flexible Coupling	517955

	YEAR	TRANSM.	FITTING POSITION	BODY STYLE & DRIVE TYPE & ENGINE	REMARKS	PRODUCT	GSP Ref.
BMW							
435i Gran Coupe							
3.0 (225 kw)	2014.03-2016.02		Front	Coupe RWD N55B30A		Flexible Coupling Kit	537669S
	2014.03-2016.02		Front;Rear	Coupe RWD N55B30A		Flexible Coupling Kit	517955S
3.0 (250 kw)	2014.03-2016.02		Centre	Coupe RWD N55B30A		Center Bearing Support	538672
	2014.03-2016.02		Front;Rear	Coupe RWD N55B30A		Flexible Coupling	517955
	2014.03-2016.02		Front	Coupe RWD N55B30A		Flexible Coupling Kit	537669S
	2014.03-2016.02		Front;Rear	Coupe RWD N55B30A		Flexible Coupling Kit	517955S
435i xDrive Cabrio							
3.0 (225 kw)	2014.07-2016.02		Centre	Cabriolet 4WD N55B30A		Center Bearing Support	538672
	2014.07-2016.02		Front	Cabriolet 4WD N55B30A		Flexible Coupling	510596
	2014.07-2016.02		Front;Rear	Cabriolet 4WD N55B30A		Flexible Coupling	517955
	2014.07-2016.02		Front;Rear	Cabriolet 4WD N55B30A		Flexible Coupling Kit	517955S
3.0 (250 kw)	2014.07-2016.02		Centre	Cabriolet 4WD N55B30A		Center Bearing Support	538672
	2014.07-2016.02		Front	Cabriolet 4WD N55B30A		Flexible Coupling	510596
	2014.07-2016.02		Front;Rear	Cabriolet 4WD N55B30A		Flexible Coupling	517955
	2014.07-2016.02		Front;Rear	Cabriolet 4WD N55B30A		Flexible Coupling Kit	517955S
435i xDrive Coupe							
3.0 (225 kw)	2013.07-2016.02		Centre	Coupe 4WD N55B30A		Center Bearing Support	538672
	2013.07-2016.02		Front	Coupe 4WD N55B30A		Flexible Coupling	510596
	2013.07-2016.02		Front;Rear	Coupe 4WD N55B30A		Flexible Coupling	517955
	2013.07-2016.02		Front;Rear	Coupe 4WD N55B30A		Flexible Coupling Kit	517955S
3.0 (250 kw)	2013.07-2016.02		Centre	Coupe 4WD N55B30A		Center Bearing Support	538672
	2013.07-2016.02		Front	Coupe 4WD N55B30A		Flexible Coupling	510596
	2013.07-2016.02		Front;Rear	Coupe 4WD N55B30A		Flexible Coupling	517955
	2013.07-2016.02		Front;Rear	Coupe 4WD N55B30A		Flexible Coupling Kit	517955S
435i xDrive Gran Coupe							
3.0 (225 kw)	2014.07-2016.02		Centre	Coupe 4WD N55B30A		Center Bearing Support	538672
	2014.07-2016.02		Front	Coupe 4WD N55B30A		Flexible Coupling	510596
	2014.07-2016.02		Front;Rear	Coupe 4WD N55B30A		Flexible Coupling	517955
	2014.07-2016.02		Front;Rear	Coupe 4WD N55B30A		Flexible Coupling Kit	517955S
3.0 (250 kw)	2014.07-2016.02		Centre	Coupe 4WD N55B30A		Center Bearing Support	538672
	2014.07-2016.02		Front	Coupe 4WD N55B30A		Flexible Coupling	510596
	2014.07-2016.02		Front;Rear	Coupe 4WD N55B30A		Flexible Coupling	517955
	2014.07-2016.02		Front;Rear	Coupe 4WD N55B30A		Flexible Coupling Kit	517955S
440i Cabrio							
3.0 (240 kw)	2016.03-2020.07		Centre	Cabriolet RWD B58B30A		Center Bearing Support	538664
	2016.03-2020.07		Front;Rear	Cabriolet RWD B58B30A		Flexible Coupling	517955
	2016.03-2020.07		Front;Rear	Cabriolet RWD B58B30A		Flexible Coupling Kit	517955S
3.0 (265 kw)	2016.03-2020.07		Centre	Cabriolet RWD B58B30A		Center Bearing Support	538664
	2016.03-2020.07		Front;Rear	Cabriolet RWD B58B30A		Flexible Coupling	517955
	2016.03-2020.07		Front;Rear	Cabriolet RWD B58B30A		Flexible Coupling Kit	517955S
440i Coupe							
3.0 (240 kw)	2016.03-2020.06		Centre	Coupe RWD B58B30A		Center Bearing Support	538664
	2016.03-2020.06		Front;Rear	Coupe RWD B58B30A		Flexible Coupling	517955
	2016.03-2020.06		Front;Rear	Coupe RWD B58B30A		Flexible Coupling Kit	517955S
3.0 (265 kw)	2016.03-2020.06		Centre	Coupe RWD B58B30A		Center Bearing Support	538664
	2016.03-2020.06		Front;Rear	Coupe RWD B58B30A		Flexible Coupling	517955
	2016.03-2020.06		Front;Rear	Coupe RWD B58B30A		Flexible Coupling Kit	517955S
440i Gran Coupe							
3.0 (240 kw)	2016.03-2021.05		Centre	Coupe RWD B58B30A		Center Bearing Support	538664
	2016.03-2021.05		Front;Rear	Coupe RWD B58B30A		Flexible Coupling Kit	517955S
3.0 (265 kw)	2016.03-2021.05		Centre	Coupe RWD B58B30A		Center Bearing Support	538664
	2016.03-2021.05		Front;Rear	Coupe RWD B58B30A		Flexible Coupling Kit	517955S
440i xDrive Cabrio							
3.0 (240 kw)	2016.03-2020.07		Front;Rear	Cabriolet 4WD B58B30A		Flexible Coupling	517955
	2016.03-2020.07		Front;Rear	Cabriolet 4WD B58B30A		Flexible Coupling Kit	517955S
3.0 (265 kw)	2016.03-2020.07		Front;Rear	Cabriolet 4WD B58B30A		Flexible Coupling	517955
	2016.03-2020.07		Front;Rear	Cabriolet 4WD B58B30A		Flexible Coupling Kit	517955S
440i xDrive Coupe							
3.0 (240 kw)	2016.03-2020.06		Front	Coupe 4WD B58B30A		Flexible Coupling	510596
	2016.03-2020.06		Front;Rear	Coupe 4WD B58B30A		Flexible Coupling	517955
	2016.03-2020.06		Front;Rear	Coupe 4WD B58B30A		Flexible Coupling Kit	517955S
3.0 (265 kw)	2016.03-2020.06		Front	Coupe 4WD B58B30A		Flexible Coupling	510596
	2016.03-2020.06		Front;Rear	Coupe 4WD B58B30A		Flexible Coupling	517955
	2016.03-2020.06		Front;Rear	Coupe 4WD B58B30A		Flexible Coupling Kit	517955S

	YEAR	TRANSM.	FITTING POSITION	BODY STYLE & DRIVE TYPE & ENGINE	REMARKS	PRODUCT	GSP Ref.
BMW							
440i xDrive Gran Coupe							
3.0 (240 kw)	2016.03-2021.04		Front;Rear	Coupe 4WD B58B30A		Flexible Coupling	517955
	2016.03-2021.04		Front;Rear	Coupe 4WD B58B30A		Flexible Coupling Kit	517955S
3.0 (265 kw)	2016.03-2021.04		Front;Rear	Coupe 4WD B58B30A		Flexible Coupling Kit	517955S
5 ActiveHybrid							
3.0 (250 kw)	2011.12-2016.10		Centre	Saloon RWD N55B30A		Center Bearing Support	539905
	2011.12-2016.10		Front;Rear	Saloon RWD N55B30A		Flexible Coupling	517955
	2011.12-2016.10		Front	Saloon RWD N55B30A		Flexible Coupling Kit	537669S
	2011.12-2016.10		Front;Rear	Saloon RWD N55B30A		Flexible Coupling Kit	517955S
518d							
2.0 (100 kw)	2013.07-2016.10	AT	Rear	Saloon RWD B47D20A/N47D20C		Propshaft	PS900135
	2013.07-2016.10		Centre	Saloon RWD B47D20A/N47D20C	AT	Center Bearing Support	539904
	2013.07-2016.10		Centre	Saloon RWD B47D20A/N47D20C	MT	Center Bearing Support	539905
	2013.07-2016.10		Front;Rear	Saloon RWD B47D20A/N47D20C		Flexible Coupling	517955
	2013.07-2016.10		Front;Rear	Saloon RWD B47D20A/N47D20C		Flexible Coupling Kit	517955S
	2018.07-2020.06		Centre	Saloon RWD B47D20B		Center Bearing Support	538640
	2018.07-2020.06		Front	Saloon RWD B47D20B		Flexible Coupling	510596
	2018.07-2020.06		Front;Rear	Saloon RWD B47D20B		Flexible Coupling	517955
	2020.07-2023.06		Centre	Saloon RWD B47D20B		Center Bearing Support	538640
	2020.07-2023.06		Front	Saloon RWD B47D20B	Width:30mm	Flexible Coupling	510596
	2020.07-2023.06		Front	Saloon RWD B47D20B	Width:32mm	Flexible Coupling	533422
	2020.07-2023.06		Front;Rear	Saloon RWD B47D20B		Flexible Coupling	517955
2.0 (105 kw)	2013.07-2014.06	AT	Rear	Saloon RWD N47D20C		Propshaft	PS900135
	2013.07-2014.06		Centre	Saloon RWD N47D20C	AT	Center Bearing Support	539904
	2013.07-2014.06		Centre	Saloon RWD N47D20C	MT	Center Bearing Support	539905
	2013.07-2014.06		Front;Rear	Saloon RWD N47D20C		Flexible Coupling	517955
	2013.07-2014.06		Front	Saloon RWD N47D20C		Flexible Coupling Kit	537669S
	2013.07-2014.06		Front;Rear	Saloon RWD N47D20C		Flexible Coupling Kit	517955S
2.0 (110 kw)	2014.07-2016.10	AT	Rear	Saloon RWD B47D20A		Propshaft	PS900135
	2014.07-2016.10		Centre	Saloon RWD B47D20A		Center Bearing Support	539904
	2014.07-2016.10		Front;Rear	Saloon RWD B47D20A		Flexible Coupling	517955
	2014.07-2016.10		Front	Saloon RWD B47D20A		Flexible Coupling Kit	537669S
	2014.07-2016.10		Front;Rear	Saloon RWD B47D20A		Flexible Coupling Kit	517955S
	2018.07-2020.06		Centre	Saloon RWD B47D20B		Center Bearing Support	538640
	2018.07-2020.06		Front	Saloon RWD B47D20B		Flexible Coupling	510596
	2018.07-2020.06		Front;Rear	Saloon RWD B47D20B		Flexible Coupling	517955
	2020.07-2023.06		Centre	Saloon RWD B47D20B		Center Bearing Support	538640
	2020.07-2023.06		Front	Saloon RWD B47D20B	Width:30mm	Flexible Coupling	510596
	2020.07-2023.06		Front	Saloon RWD B47D20B	Width:32mm	Flexible Coupling	533422
	2020.07-2023.06		Front;Rear	Saloon RWD B47D20B		Flexible Coupling	517955
2.0 (120 kw)	2013.10-2016.10	AT	Rear	Saloon RWD B47D20A		Propshaft	PS900135
	2013.10-2016.10		Centre	Saloon RWD B47D20A		Center Bearing Support	539904
	2013.10-2016.10		Front;Rear	Saloon RWD B47D20A		Flexible Coupling	517955
	2013.10-2016.10		Front;Rear	Saloon RWD B47D20A		Flexible Coupling Kit	517955S
518d Touring							
2.0 (100 kw)	2013.07-2014.06	AT	Rear	Estate RWD N47D20C		Propshaft	PS900135
	2013.07-2014.06		Centre	Estate RWD N47D20C	AT	Center Bearing Support	539904
	2013.07-2014.06		Centre	Estate RWD N47D20C	MT	Center Bearing Support	539905
	2013.07-2014.06		Front;Rear	Estate RWD N47D20C		Flexible Coupling	517955
	2013.07-2014.06		Front;Rear	Estate RWD N47D20C		Flexible Coupling Kit	517955S
	2018.07-2020.06		Centre	Estate RWD B47D20B		Center Bearing Support	538640
	2018.07-2020.06		Front	Estate RWD B47D20B	Width:30mm	Flexible Coupling	510596
	2018.07-2020.06		Front	Estate RWD B47D20B	Width:32mm	Flexible Coupling	533422
	2018.07-2020.06		Front;Rear	Estate RWD B47D20B		Flexible Coupling	517955
	2018.07-2020.06		Front;Rear	Estate RWD B47D20B		Flexible Coupling Kit	517955S
	2020.07-		Centre	Estate RWD B47D20B		Center Bearing Support	538640
	2020.07-		Front	Estate RWD B47D20B	Width:30mm	Flexible Coupling	510596
	2020.07-		Front	Estate RWD B47D20B	Width:32mm	Flexible Coupling	533422
2.0 (105 kw)	2013.07-2014.06	AT	Rear	Estate RWD N47D20C		Propshaft	PS900135
	2013.07-2014.06		Centre	Estate RWD N47D20C	AT	Center Bearing Support	539904
	2013.07-2014.06		Centre	Estate RWD N47D20C	MT	Center Bearing Support	539905
	2013.07-2014.06		Front;Rear	Estate RWD N47D20C		Flexible Coupling	517955
	2013.07-2014.06		Front	Estate RWD N47D20C		Flexible Coupling Kit	537669S
	2013.07-2014.06		Front;Rear	Estate RWD N47D20C		Flexible Coupling Kit	517955S

	YEAR	TRANSM.	FITTING POSITION	BODY STYLE & DRIVE TYPE & ENGINE	REMARKS	PRODUCT	GSP Ref.
BMW							
518d Touring							
2.0 (110 kw)	2014.07-2017.02	AT	Rear	Estate RWD B47D20A		Propshaft	PS900135
	2014.07-2017.02		Centre	Estate RWD B47D20A		Center Bearing Support	539904
	2014.07-2017.02		Front;Rear	Estate RWD B47D20A		Flexible Coupling	517955
	2014.07-2017.02		Front	Estate RWD B47D20A		Flexible Coupling Kit	537669S
	2014.07-2017.02		Front;Rear	Estate RWD B47D20A		Flexible Coupling Kit	517955S
	2018.07-2020.06		Centre	Estate RWD B47D20B		Center Bearing Support	538640
	2018.07-2020.06		Front	Estate RWD B47D20B	Width:30mm	Flexible Coupling	510596
	2018.07-2020.06		Front	Estate RWD B47D20B	Width:32mm	Flexible Coupling	533422
	2018.07-2020.06		Front;Rear	Estate RWD B47D20B		Flexible Coupling	517955
	2018.07-2020.06		Front;Rear	Estate RWD B47D20B		Flexible Coupling Kit	517955S
	2020.07-		Centre	Estate RWD B47D20B		Center Bearing Support	538640
	2020.07-		Front	Estate RWD B47D20B	Width:30mm	Flexible Coupling	510596
	2020.07-		Front	Estate RWD B47D20B	Width:32mm	Flexible Coupling	533422
2.0 (120 kw)	2014.07-2017.02	AT	Rear	Estate RWD B47D20A		Propshaft	PS900135
	2014.07-2017.02		Centre	Estate RWD B47D20A		Center Bearing Support	539904
	2014.07-2017.02		Front;Rear	Estate RWD B47D20A		Flexible Coupling	517955
	2014.07-2017.02		Front;Rear	Estate RWD B47D20A		Flexible Coupling Kit	517955S
518i							
1.8 (85 kw)	1994.05-1995.08		Centre	Saloon RWD M43B184E2	Installation size:160mm	Center Bearing Support	538661
	1994.05-1995.08		Centre	Saloon RWD M43B184E2	Installation size:130.6mm	Center Bearing Support	538677
	1994.05-1995.08		Front	Saloon RWD M43B184E2		Flexible Coupling	510597
	1994.05-1995.08		Front	Saloon RWD M43B184E2		Flexible Coupling Kit	510597S
518i Touring							
1.8 (74 kw)	1996.02-1996.07		Centre	Estate RWD M43 B18 (184E2)	Installation size:160mm	Center Bearing Support	538661
	1996.02-1996.07		Centre	Estate RWD M43 B18 (184E2)	Installation size:130.6mm	Center Bearing Support	538677
	1996.02-1996.07		Front	Estate RWD M43 B18 (184E2)		Flexible Coupling	510597
	1996.02-1996.07		Front	Estate RWD M43 B18 (184E2)		Flexible Coupling Kit	510597S
1.8 (85 kw)	1994.05-1996.07		Centre	Estate RWD M43 B18 (184E2)	Installation size:160mm	Center Bearing Support	538661
	1994.05-1996.07		Centre	Estate RWD M43 B18 (184E2)	Installation size:130.6mm	Center Bearing Support	538677
	1994.05-1996.07		Front	Estate RWD M43 B18 (184E2)		Flexible Coupling	510597
	1994.05-1996.07		Front	Estate RWD M43 B18 (184E2)		Flexible Coupling Kit	510597S
520d							
2.0 (100 kw)	1999.09-2003.05	MT	Rear	Saloon RWD M47D204D1		Joint,propshaft	605057
	1999.09-2003.05		Front	Saloon RWD M47D204D1		Flexible Coupling	530160
	1999.09-2003.05		Front	Saloon RWD M47D204D1		Flexible Coupling Kit	530160S
	2013.01-2014.07	AT	Rear	Saloon RWD N47D20C		Propshaft	PS900135
	2013.01-2014.07		Centre	Saloon RWD N47D20C	AT	Center Bearing Support	539904
	2013.01-2014.07		Centre	Saloon RWD N47D20C	MT	Center Bearing Support	539905
	2013.01-2014.07		Front;Rear	Saloon RWD N47D20C		Flexible Coupling	517955
	2013.01-2014.07		Front;Rear	Saloon RWD N47D20C		Flexible Coupling Kit	517955S
2.0 (110 kw)	2005.09-2007.02		Centre	Saloon RWD M47D204D4	Height:48mm	Center Bearing Support	538647
	2005.09-2007.02		Centre	Saloon RWD M47D204D4	Height:50mm	Center Bearing Support	538673
	2005.09-2007.02		Front	Saloon RWD M47D204D4	Width:30mm	Flexible Coupling	510596
	2005.09-2007.02		Front	Saloon RWD M47D204D4	Width:32mm	Flexible Coupling	533422
	2005.09-2007.02		Front	Saloon RWD M47D204D4		Flexible Coupling Kit	533422S
2.0 (120 kw)	2005.09-2009.12	MT	Rear	Saloon RWD M47D204D4/N47D20C		Propshaft	PS901385
	2005.09-2009.12		Centre	Saloon RWD M47D204D4/N47D20C	Height:48mm	Center Bearing Support	538647
	2005.09-2009.12		Centre	Saloon RWD M47D204D4/N47D20C	Height:50mm	Center Bearing Support	538673
	2005.09-2009.12		Front	Saloon RWD M47D204D4/N47D20C	Width:30mm	Flexible Coupling	510596
	2005.09-2009.12		Front	Saloon RWD M47D204D4/N47D20C	Width:32mm	Flexible Coupling	533422
	2005.09-2009.12		Front	Saloon RWD M47D204D4/N47D20C		Flexible Coupling Kit	533422S
	2010.06-2016.10	8AT	Rear	Saloon RWD B47D20A/N47D20C	Model year from:2014	Propshaft	PS900135
	2010.06-2016.10	AT	Rear	Saloon RWD B47D20A/N47D20C	Model year to:2013	Propshaft	PS901484
	2010.06-2016.10		Centre	Saloon RWD B47D20A/N47D20C	AT	Center Bearing Support	539904
	2010.06-2016.10		Centre	Saloon RWD B47D20A/N47D20C	MT	Center Bearing Support	539905
	2010.06-2016.10		Front;Rear	Saloon RWD B47D20A/N47D20C		Flexible Coupling	517955
	2010.06-2016.10		Front;Rear	Saloon RWD B47D20A/N47D20C		Flexible Coupling Kit	517955S
	2016.09-2023.06		Centre	Saloon RWD B47D20A/B47D20B		Center Bearing Support	538640
	2016.09-2023.06		Front	Saloon RWD B47D20A/B47D20B	Width:30mm	Flexible Coupling	510596
	2016.09-2023.06		Front	Saloon RWD B47D20A/B47D20B	Width:32mm	Flexible Coupling	533422
	2016.09-2023.06		Front;Rear	Saloon RWD B47D20A/B47D20B		Flexible Coupling	517955
	2016.09-2023.06		Front	Saloon RWD B47D20A/B47D20B		Flexible Coupling Kit	533422S
	2016.09-2023.06		Front;Rear	Saloon RWD B47D20A/B47D20B	6MT	Flexible Coupling Kit	517955S
	2019.11-2023.06		Centre	Saloon RWD B47D20B		Center Bearing Support	538640

	YEAR	TRANSM.	FITTING POSITION	BODY STYLE & DRIVE TYPE & ENGINE	REMARKS	PRODUCT	GSP Ref.
BMW							
520d							
2.0 (120 kw)	2019.11-2023.06		Front	Saloon RWD B47D20B	Width:30mm	Flexible Coupling	510596
	2019.11-2023.06		Front	Saloon RWD B47D20B	Width:32mm	Flexible Coupling	533422
	2019.11-2023.06		Front	Saloon RWD B47D20B		Flexible Coupling	537625
	2019.11-2023.06		Front;Rear	Saloon RWD B47D20B		Flexible Coupling	517955
2.0 (125 kw)	2007.09-2009.12	MT	Rear	Saloon RWD N47 D20 A		Propshaft	PS901385
2.0 (130 kw)	2007.09-2009.12	MT	Rear	Saloon RWD N47D20A/N47D20C		Propshaft	PS901385
	2007.09-2009.12		Centre	Saloon RWD N47D20A/N47D20C	Height:48mm	Center Bearing Support	538647
	2007.09-2009.12		Centre	Saloon RWD N47D20A/N47D20C	Height:50mm	Center Bearing Support	538673
	2007.09-2009.12		Front	Saloon RWD N47D20A/N47D20C	Width:30mm	Flexible Coupling	510596
	2007.09-2009.12		Front	Saloon RWD N47D20A/N47D20C	Width:32mm	Flexible Coupling	533422
	2007.09-2009.12		Front	Saloon RWD N47D20A/N47D20C		Flexible Coupling Kit	533422S
2.0 (135 kw)	2010.06-2014.06	8AT	Rear	Saloon RWD N47D20C	Model year from:2014	Propshaft	PS900135
	2010.06-2014.06	AT	Rear	Saloon RWD N47D20C	Model year to:2013	Propshaft	PS901484
	2010.06-2014.06		Centre	Saloon RWD N47D20C	AT	Center Bearing Support	539904
	2010.06-2014.06		Centre	Saloon RWD N47D20C	MT	Center Bearing Support	539905
	2010.06-2014.06		Front;Rear	Saloon RWD N47D20C		Flexible Coupling	517955
	2010.06-2014.06		Front	Saloon RWD N47D20C		Flexible Coupling Kit	537669S
	2010.06-2014.06		Front;Rear	Saloon RWD N47D20C		Flexible Coupling Kit	517955S
2.0 (140 kw)	2014.07-2016.10	AT	Rear	Saloon RWD B47D20A		Propshaft	PS900135
	2014.07-2016.10		Centre	Saloon RWD B47D20A		Center Bearing Support	539904
	2014.07-2016.10		Front;Rear	Saloon RWD B47D20A		Flexible Coupling	517955
	2014.07-2016.10		Front	Saloon RWD B47D20A		Flexible Coupling Kit	537669S
	2014.07-2016.10		Front;Rear	Saloon RWD B47D20A		Flexible Coupling Kit	517955S
	2016.09-2023.06		Centre	Saloon RWD B47D20A/B47D20B		Center Bearing Support	538640
	2016.09-2023.06		Front	Saloon RWD B47D20A/B47D20B	Width:30mm	Flexible Coupling	510596
	2016.09-2023.06		Front	Saloon RWD B47D20A/B47D20B	Width:32mm	Flexible Coupling	533422
	2016.09-2023.06		Front;Rear	Saloon RWD B47D20A/B47D20B		Flexible Coupling	517955
	2016.09-2023.06		Front	Saloon RWD B47D20A/B47D20B		Flexible Coupling Kit	533422S
	2016.09-2023.06		Front;Rear	Saloon RWD B47D20A/B47D20B	6MT	Flexible Coupling Kit	517955S
	2019.11-2023.06		Centre	Saloon RWD B47D20B		Center Bearing Support	538640
	2019.11-2023.06		Front	Saloon RWD B47D20B	Width:30mm	Flexible Coupling	510596
	2019.11-2023.06		Front	Saloon RWD B47D20B	Width:32mm	Flexible Coupling	533422
	2019.11-2023.06		Front	Saloon RWD B47D20B		Flexible Coupling	537625
	2019.11-2023.06		Front;Rear	Saloon RWD B47D20B		Flexible Coupling	517955
2.0 (147 kw)	2010.06-2014.06	8AT	Rear	Saloon RWD N47D20C	Model year from:2014	Propshaft	PS900135
	2010.06-2014.06	AT	Rear	Saloon RWD N47D20C	Model year to:2013	Propshaft	PS901484
	2010.06-2014.06		Centre	Saloon RWD N47D20C	AT	Center Bearing Support	539904
	2010.06-2014.06		Centre	Saloon RWD N47D20C	MT	Center Bearing Support	539905
	2010.06-2014.06		Front;Rear	Saloon RWD N47D20C		Flexible Coupling	517955
	2010.06-2014.06		Front;Rear	Saloon RWD N47D20C		Flexible Coupling Kit	517955S
2.0 (151 kw)	2014.07-2016.10	AT	Rear	Saloon RWD B47D20A		Propshaft	PS900135
	2014.07-2016.10		Centre	Saloon RWD B47D20A		Center Bearing Support	539904
	2014.07-2016.10		Front;Rear	Saloon RWD B47D20A		Flexible Coupling Kit	517955S
2.0 (155 kw)	2013.10-2016.10	AT	Rear	Saloon RWD B47D20A		Propshaft	PS900135
	2013.10-2016.10		Centre	Saloon RWD B47D20A		Center Bearing Support	539904
	2013.10-2016.10		Front;Rear	Saloon RWD B47D20A		Flexible Coupling Kit	517955S
520d Gran Turismo							
2.0 (100 kw)	2013.07-2017.02		Front;Rear	Hatchback RWD N47D20C		Flexible Coupling	517955
	2013.07-2017.02		Front;Rear	Hatchback RWD N47D20C		Flexible Coupling Kit	517955S
2.0 (120 kw)	2012.07-2013.06		Front;Rear	Hatchback RWD N47D20C		Flexible Coupling	517955
	2012.07-2013.06		Front;Rear	Hatchback RWD N47D20C		Flexible Coupling Kit	517955S
2.0 (135 kw)	2012.07-2017.02		Front	Hatchback RWD N47D20C		Flexible Coupling	510596
	2012.07-2017.02		Front;Rear	Hatchback RWD N47D20C		Flexible Coupling	517955
	2012.07-2017.02		Front;Rear	Hatchback RWD N47D20C		Flexible Coupling Kit	517955S
520d Touring							
2.0 (100 kw)	1999.09-2004.05	MT	Rear	Estate RWD M47D204D1		Joint,propshaft	605057
	1999.09-2004.05		Centre	Estate RWD M47D204D1	with bearing	Center Bearing Support	538679
	1999.09-2004.05		Front	Estate RWD M47D204D1		Flexible Coupling	530160
	1999.09-2004.05		Front	Estate RWD M47D204D1		Flexible Coupling Kit	530160S
	2010.06-2014.06	8AT	Rear	Estate RWD N47D20C	Model year from:2014	Propshaft	PS900135
	2010.06-2014.06	AT	Rear	Estate RWD N47D20C	Model year to:2013	Propshaft	PS901484
	2010.06-2014.06		Centre	Estate RWD N47D20C	AT	Center Bearing Support	539904
	2010.06-2014.06		Centre	Estate RWD N47D20C	MT	Center Bearing Support	539905
	2010.06-2014.06		Front;Rear	Estate RWD N47D20C		Flexible Coupling	517955

	YEAR	TRANSM.	FITTING POSITION	BODY STYLE & DRIVE TYPE & ENGINE	REMARKS	PRODUCT	GSP Ref.
BMW **520d Touring**							
2.0 (100 kw)	2010.06-2014.06		Front;Rear	Estate RWD N47D20C		Flexible Coupling Kit	517955S
2.0 (110 kw)	2005.09-2007.02		Centre	Estate RWD M47D204D4	Height:48mm	Center Bearing Support	538647
	2005.09-2007.02		Centre	Estate RWD M47D204D4	Height:50mm	Center Bearing Support	538673
	2005.09-2007.02		Front	Estate RWD M47D204D4		Flexible Coupling	533422
	2005.09-2007.02		Front	Estate RWD M47D204D4		Flexible Coupling Kit	533422S
2.0 (120 kw)	2005.09-2010.05	MT	Rear	Estate RWD M47D204D4/N47D20C		Propshaft	PS901385
	2005.09-2010.05		Centre	Estate RWD M47D204D4/N47D20C	Height:48mm	Center Bearing Support	538647
	2005.09-2010.05		Centre	Estate RWD M47D204D4/N47D20C	Height:50mm	Center Bearing Support	538673
	2005.09-2010.05		Front	Estate RWD M47D204D4/N47D20C	Inner diameter:50mm;Width:30mm	Flexible Coupling	510596
	2005.09-2010.05		Front	Estate RWD M47D204D4/N47D20C	Inner diameter:44mm	Flexible Coupling	530160
	2005.09-2010.05		Front	Estate RWD M47D204D4/N47D20C	Width:32mm	Flexible Coupling	533422
	2005.09-2010.05		Front	Estate RWD M47D204D4/N47D20C		Flexible Coupling Kit	533422S
	2010.06-2017.02	8AT	Rear	Estate RWD B47D20A/N47D20C	Model year from:2014	Propshaft	PS900135
	2010.06-2017.02	AT	Rear	Estate RWD B47D20A/N47D20C	Model year to:2013	Propshaft	PS901484
	2010.06-2017.02		Centre	Estate RWD B47D20A/N47D20C	AT	Center Bearing Support	539904
	2010.06-2017.02		Centre	Estate RWD B47D20A/N47D20C	MT	Center Bearing Support	539905
	2010.06-2017.02		Front;Rear	Estate RWD B47D20A/N47D20C		Flexible Coupling	517955
	2010.06-2017.02		Front;Rear	Estate RWD B47D20A/N47D20C		Flexible Coupling Kit	517955S
	2017.03-		Centre	Estate RWD B47D20A/B47D20B		Center Bearing Support	538640
	2017.03-		Front	Estate RWD B47D20A/B47D20B	Width:30mm;510596 and 537625 different structure	Flexible Coupling	510596
	2017.03-		Front	Estate RWD B47D20A/B47D20B	Width:32mm	Flexible Coupling	533422
	2017.03-		Front	Estate RWD B47D20A/B47D20B	537625 and 510596 different structure	Flexible Coupling	537625
	2017.03-		Front;Rear	Estate RWD B47D20A/B47D20B		Flexible Coupling	517955
	2017.03-		Front	Estate RWD B47D20A/B47D20B	Width:32mm	Flexible Coupling Kit	533422S
	2017.03-		Front	Estate RWD B47D20A/B47D20B	Width:30mm	Flexible Coupling Kit	537625S
	2017.03-		Front;Rear	Estate RWD B47D20A/B47D20B	6MT	Flexible Coupling Kit	517955S
	2019.11-		Centre	Estate RWD B47D20B		Center Bearing Support	538640
	2019.11-		Front	Estate RWD B47D20B	Width:30mm	Flexible Coupling	510596
	2019.11-		Front	Estate RWD B47D20B	Width:32mm	Flexible Coupling	533422
	2019.11-		Front;Rear	Estate RWD B47D20B		Flexible Coupling	517955
2.0 (130 kw)	2007.09-2010.05	MT	Rear	Estate RWD N47D20A/N47D20C		Propshaft	PS901385
	2007.09-2010.05		Centre	Estate RWD N47D20A/N47D20C	Height:48mm	Center Bearing Support	538647
	2007.09-2010.05		Centre	Estate RWD N47D20A/N47D20C	Height:50mm	Center Bearing Support	538673
	2007.09-2010.05		Front	Estate RWD N47D20A/N47D20C		Flexible Coupling	533422
	2007.09-2010.05		Front;Rear	Estate RWD N47D20A/N47D20C		Flexible Coupling	517955
	2007.09-2010.05		Front	Estate RWD N47D20A/N47D20C		Flexible Coupling Kit	533422S
	2007.09-2010.05		Front;Rear	Estate RWD N47D20A/N47D20C		Flexible Coupling Kit	517955S
2.0 (135 kw)	2010.06-2014.06	8AT	Rear	Estate RWD N47D20C	Model year from:2014	Propshaft	PS900135
	2010.06-2014.06	AT	Rear	Estate RWD N47D20C	Model year to:2013	Propshaft	PS901484
	2010.06-2014.06		Centre	Estate RWD N47D20C	AT	Center Bearing Support	539904
	2010.06-2014.06		Centre	Estate RWD N47D20C	MT	Center Bearing Support	539905
	2010.06-2014.06		Front;Rear	Estate RWD N47D20C		Flexible Coupling	517955
	2010.06-2014.06		Front	Estate RWD N47D20C		Flexible Coupling Kit	537669S
	2010.06-2014.06		Front;Rear	Estate RWD N47D20C		Flexible Coupling Kit	517955S
2.0 (140 kw)	2014.07-2017.02	AT	Rear	Estate RWD B47D20A		Propshaft	PS900135
	2014.07-2017.02		Centre	Estate RWD B47D20A		Center Bearing Support	539904
	2014.07-2017.02		Front;Rear	Estate RWD B47D20A		Flexible Coupling	517955
	2014.07-2017.02		Front	Estate RWD B47D20A		Flexible Coupling Kit	537669S
	2014.07-2017.02		Front;Rear	Estate RWD B47D20A		Flexible Coupling Kit	517955S
	2017.03-		Centre	Estate RWD B47D20A/B47D20B		Center Bearing Support	538640
	2017.03-		Front	Estate RWD B47D20A/B47D20B	Width:30mm;510596 and 537625 different structure	Flexible Coupling	510596
	2017.03-		Front	Estate RWD B47D20A/B47D20B	Width:32mm	Flexible Coupling	533422
	2017.03-		Front	Estate RWD B47D20A/B47D20B	537625 and 510596 different structure	Flexible Coupling	537625
	2017.03-		Front;Rear	Estate RWD B47D20A/B47D20B		Flexible Coupling	517955
	2017.03-		Front	Estate RWD B47D20A/B47D20B	Width:32mm	Flexible Coupling Kit	533422S
	2017.03-		Front	Estate RWD B47D20A/B47D20B	Width:30mm	Flexible Coupling Kit	537625S
	2017.03-		Front;Rear	Estate RWD B47D20A/B47D20B	6MT	Flexible Coupling Kit	517955S
	2019.11-		Centre	Estate RWD B47D20B		Center Bearing Support	538640
	2019.11-		Front	Estate RWD B47D20B	Width:30mm	Flexible Coupling	510596
	2019.11-		Front	Estate RWD B47D20B	Width:32mm	Flexible Coupling	533422
	2019.11-		Front;Rear	Estate RWD B47D20B		Flexible Coupling	517955
2.0 (147 kw)	2010.06-2014.06	8AT	Rear	Estate RWD N47D20C	Model year from:2014	Propshaft	PS900135
	2010.06-2014.06	AT	Rear	Estate RWD N47D20C	Model year to:2013	Propshaft	PS901484
	2010.06-2014.06		Centre	Estate RWD N47D20C	AT	Center Bearing Support	539904

	YEAR	TRANSM.	FITTING POSITION	BODY STYLE & DRIVE TYPE & ENGINE	REMARKS	PRODUCT	GSP Ref.
BMW							
520d Touring							
2.0 (147 kw)	2010.06-2014.06		Centre	Estate RWD N47D20C	MT	Center Bearing Support	539905
	2010.06-2014.06		Front;Rear	Estate RWD N47D20C		Flexible Coupling	517955
	2010.06-2014.06		Front;Rear	Estate RWD N47D20C		Flexible Coupling Kit	517955S
2.0 (151 kw)	2014.07-2017.02	AT	Rear	Estate RWD B47D20A		Propshaft	PS900135
	2014.07-2017.02		Centre	Estate RWD B47D20A		Center Bearing Support	539904
	2014.07-2017.02		Front;Rear	Estate RWD B47D20A		Flexible Coupling Kit	517955S
2.0 (155 kw)	2014.07-2017.02	AT	Rear	Estate RWD B47D20A		Propshaft	PS900135
	2014.07-2017.02		Centre	Estate RWD B47D20A		Center Bearing Support	539904
	2014.07-2017.02		Front;Rear	Estate RWD B47D20A		Flexible Coupling Kit	517955S
520d xDrive							
2.0 (100 kw)	2013.01-2014.06	AT	Front	Saloon 4WD N47D20C		Propshaft	PS900138
	2013.01-2014.06		Centre	Saloon 4WD N47D20C		Center Bearing Support	539061
	2013.01-2014.06		Front	Saloon 4WD N47D20C	Inner diameter:50mm,Width:30mm	Flexible Coupling	510596
	2013.01-2014.06		Front	Saloon 4WD N47D20C	Inner diameter:50mm,Width:32mm	Flexible Coupling	533422
	2013.01-2014.06		Front	Saloon 4WD N47D20C	Inner diameter:48.5mm	Flexible Coupling	537631
	2013.01-2014.06		Front;Rear	Saloon 4WD N47D20C		Flexible Coupling	517955
2.0 (120 kw)	2013.07-2016.10		Centre	Saloon 4WD B47D20A/N47D20C		Center Bearing Support	539061
	2013.07-2016.10		Front;Rear	Saloon 4WD B47D20A/N47D20C		Flexible Coupling	517955
	2016.09-2023.06		Centre	Saloon 4WD B47D20A/B47D20B		Center Bearing Support	538640
	2016.09-2023.06		Front	Saloon 4WD B47D20A/B47D20B	Inner diameter:50mm;510596 and 537625 different structure	Flexible Coupling	510596
	2016.09-2023.06		Front	Saloon 4WD B47D20A/B47D20B	537625 and 510596 different structure	Flexible Coupling	537625
	2016.09-2023.06		Front	Saloon 4WD B47D20A/B47D20B	Inner diameter:48.5mm	Flexible Coupling	537631
2.0 (135 kw)	2013.07-2014.06	AT	Front	Saloon 4WD N47D20C		Propshaft	PS900138
	2013.07-2014.06		Centre	Saloon 4WD N47D20C		Center Bearing Support	539061
	2013.07-2014.06		Front	Saloon 4WD N47D20C	Width:30mm	Flexible Coupling	510596
	2013.07-2014.06		Front	Saloon 4WD N47D20C	Width:32mm	Flexible Coupling	533422
	2013.07-2014.06		Front	Saloon 4WD N47D20C	Width:30mm	Flexible Coupling	537631
	2013.07-2014.06		Front;Rear	Saloon 4WD N47D20C		Flexible Coupling	517955
	2013.07-2014.06		Front	Saloon 4WD N47D20C		Flexible Coupling Kit	537669S
	2013.07-2014.06		Front;Rear	Saloon 4WD N47D20C		Flexible Coupling Kit	517955S
2.0 (140 kw)	2014.07-2016.10		Centre	Saloon 4WD B47D20A		Center Bearing Support	539061
	2014.07-2016.10		Front	Saloon 4WD B47D20A		Flexible Coupling	510596
	2014.07-2016.10		Front;Rear	Saloon 4WD B47D20A		Flexible Coupling	517955
	2014.07-2016.10		Front	Saloon 4WD B47D20A		Flexible Coupling Kit	537669S
	2014.07-2016.10		Front;Rear	Saloon 4WD B47D20A		Flexible Coupling Kit	517955S
	2016.09-2023.06		Centre	Saloon 4WD B47D20A/B47D20B		Center Bearing Support	538640
	2016.09-2023.06		Front	Saloon 4WD B47D20A/B47D20B	Inner diameter:50mm;510596 and 537625 different structure	Flexible Coupling	510596
	2016.09-2023.06		Front	Saloon 4WD B47D20A/B47D20B	537625 and 510596 different structure	Flexible Coupling	537625
	2016.09-2023.06		Front	Saloon 4WD B47D20A/B47D20B	Inner diameter:48.5mm	Flexible Coupling	537631
	2019.11-2023.06		Centre	Saloon 4WD B47D20B		Center Bearing Support	538640
	2019.11-2023.06		Front	Saloon 4WD B47D20B	Inner diameter:50mm	Flexible Coupling	510596
	2019.11-2023.06		Front	Saloon 4WD B47D20B	Inner diameter:48.5mm	Flexible Coupling	537631
2.0 (147 kw)	2013.01-2014.06	AT	Front	Saloon 4WD N47D20C		Propshaft	PS900138
	2013.01-2014.06		Centre	Saloon 4WD N47D20C		Center Bearing Support	539061
	2013.01-2014.06		Front	Saloon 4WD N47D20C	Inner diameter:50mm,Width:30mm	Flexible Coupling	510596
	2013.01-2014.06		Front	Saloon 4WD N47D20C	Inner diameter:50mm,Width:32mm	Flexible Coupling	533422
	2013.01-2014.06		Front	Saloon 4WD N47D20C	Inner diameter:48.5mm	Flexible Coupling	537631
	2013.01-2014.06		Front;Rear	Saloon 4WD N47D20C		Flexible Coupling	517955
2.0 (151 kw)	2014.07-2016.10		Centre	Saloon 4WD B47D20A		Center Bearing Support	539061
	2014.07-2016.10		Front;Rear	Saloon 4WD B47D20A		Flexible Coupling	517955
2.0 (155 kw)	2013.10-2016.10		Centre	Saloon 4WD B47D20A		Center Bearing Support	539061
	2013.10-2016.10		Front;Rear	Saloon 4WD B47D20A		Flexible Coupling	517955
520d xDrive Touring							
2.0 (100 kw)	2013.07-2014.06	AT	Front	Estate 4WD N47D20C		Propshaft	PS900138
	2013.07-2014.06		Centre	Estate 4WD N47D20C		Center Bearing Support	539061
2.0 (120 kw)	2013.07-2017.02		Centre	Estate 4WD B47D20A/N47D20C		Center Bearing Support	539061
	2013.07-2017.02		Front;Rear	Estate 4WD B47D20A/N47D20C		Flexible Coupling Kit	517955S
	2017.07-		Centre	Estate 4WD B47D20A/B47D20B		Center Bearing Support	538640
	2017.07-		Front	Estate 4WD B47D20A/B47D20B	Inner diameter:50mm;510596 and 537625 different structure	Flexible Coupling	510596
	2017.07-		Front	Estate 4WD B47D20A/B47D20B	537625 and 510596 different structure	Flexible Coupling	537625
	2017.07-		Front	Estate 4WD B47D20A/B47D20B	Inner diameter:48.5mm	Flexible Coupling	537631
	2017.07-		Front	Estate 4WD B47D20A/B47D20B		Flexible Coupling Kit	537625S
2.0 (135 kw)	2013.07-2014.06	AT	Front	Estate 4WD N47D20C		Propshaft	PS900138
	2013.07-2014.06		Centre	Estate 4WD N47D20C		Center Bearing Support	539061

	YEAR	TRANSM.	FITTING POSITION	BODY STYLE & DRIVE TYPE & ENGINE	REMARKS	PRODUCT	GSP Ref.
BMW **520d xDrive Touring**							
2.0 (135 kw)	2013.07-2014.06		Front	Estate 4WD N47D20C		Flexible Coupling	510596
	2013.07-2014.06		Front;Rear	Estate 4WD N47D20C		Flexible Coupling	517955
	2013.07-2014.06		Front	Estate 4WD N47D20C		Flexible Coupling Kit	537669S
	2013.07-2014.06		Front;Rear	Estate 4WD N47D20C		Flexible Coupling Kit	517955S
2.0 (140 kw)	2014.07-2017.02		Centre	Estate 4WD B47D20A		Center Bearing Support	539061
	2014.07-2017.02		Front	Estate 4WD B47D20A		Flexible Coupling	510596
	2014.07-2017.02		Front;Rear	Estate 4WD B47D20A		Flexible Coupling	517955
	2014.07-2017.02		Front	Estate 4WD B47D20A		Flexible Coupling Kit	537669S
	2014.07-2017.02		Front;Rear	Estate 4WD B47D20A		Flexible Coupling Kit	517955S
	2017.07-		Centre	Estate 4WD B47D20A/B47D20B		Center Bearing Support	538640
	2017.07-		Centre	Combi Van 4WD B47D20A/B47D20B		Center Bearing Support	538640
	2017.07-		Front	Estate 4WD B47D20A/B47D20B	Inner diameter:50mm;510596 and 537625 different structure	Flexible Coupling	510596
	2017.07-		Front	Combi Van 4WD B47D20A/B47D20B	Inner diameter:50mm	Flexible Coupling	510596
	2017.07-		Front	Estate 4WD B47D20A/B47D20B	537625 and 510596 different structure	Flexible Coupling	537625
	2017.07-		Front	Estate 4WD B47D20A/B47D20B	Inner diameter:48.5mm	Flexible Coupling	537631
	2017.07-		Front	Combi Van 4WD B47D20A/B47D20B	Inner diameter:48.5mm	Flexible Coupling	537631
	2017.07-		Front	Estate 4WD B47D20A/B47D20B		Flexible Coupling Kit	537625S
	2019.11-		Centre	Estate 4WD B47D20B		Center Bearing Support	538640
	2019.11-		Front	Estate 4WD B47D20B	Inner diameter:50mm	Flexible Coupling	510596
	2019.11-		Front	Estate 4WD B47D20B	Inner diameter:48.5mm	Flexible Coupling	537631
	2019.11-		Front;Rear	Estate 4WD B47D20B		Flexible Coupling	517955
2.0 (147 kw)	2013.07-2014.06	AT	Front	Estate 4WD N47D20C		Propshaft	PS900138
	2013.07-2014.06		Centre	Estate 4WD N47D20C		Center Bearing Support	539061
2.0 (151 kw)	2014.07-2017.02		Centre	Estate 4WD B47D20A		Center Bearing Support	539061
	2014.07-2017.02		Front;Rear	Estate 4WD B47D20A		Flexible Coupling Kit	517955S
2.0 (155 kw)	2014.07-2017.02		Centre	Estate 4WD B47D20A		Center Bearing Support	539061
	2014.07-2017.02		Front;Rear	Estate 4WD B47D20A		Flexible Coupling Kit	517955S
520e							
2.0 (150 kw)	2021.03-2022.05		Front;Rear	Saloon RWD B48B20A		Flexible Coupling	517955
520i							
1.6 (125 kw)	2013.07-2016.10		Centre	Saloon RWD N20B16A		Center Bearing Support	538656
	2013.07-2016.10		Front	Saloon RWD N20B16A		Flexible Coupling	510596
	2013.07-2016.10		Front	Saloon RWD N20B16A		Flexible Coupling	537625
	2013.07-2016.10		Front;Rear	Saloon RWD N20B16A	Inner diameter:50mm	Flexible Coupling	533422
	2013.07-2016.10		Front;Rear	Saloon RWD N20B16A	Inner diameter:48.5mm	Flexible Coupling	537631
	2013.07-2016.10		Front	Saloon RWD N20B16A		Flexible Coupling Kit	510596S
	2013.07-2016.10		Front	Saloon RWD N20B16A		Flexible Coupling Kit	537625S
	2017.07-2023.06		Centre	Saloon RWD B48B16A		Center Bearing Support	538640
	2017.07-2023.06		Front	Saloon RWD B48B16A	Width:30mm	Flexible Coupling	510596
	2017.07-2023.06		Front	Saloon RWD B48B16A	Width:32mm	Flexible Coupling	533422
	2017.07-2023.06		Front	Saloon RWD B48B16A		Flexible Coupling Kit	533422S
2.0 (100 kw)	1996.01-2003.06	AT	Rear	Saloon RWD M52B206S3/M52B206S4		Propshaft	PS901436
	1996.01-2003.06	AT/MT	Rear	Saloon RWD M52B206S3/M52B206S4	Date from:2000.06	Joint,propshaft	605200
	1996.01-2003.06		Centre	Saloon RWD M52B206S3/M52B206S4	Installation Height:46mm	Center Bearing Support	538661
	1996.01-2003.06		Centre	Saloon RWD M52B206S3/M52B206S4	Installation Height:45mm	Center Bearing Support	538679
	1996.01-2003.06		Front	Saloon RWD M52B206S3/M52B206S4		Flexible Coupling	510597
	1996.01-2003.06		Front	Saloon RWD M52B206S3/M52B206S4	MT	Flexible Coupling Kit	510597S
2.0 (110 kw)	1990.04-1995.08		Centre	Saloon RWD M50B206S1/M50B206S2		Center Bearing Support	538677
	1990.04-1995.08		Front	Saloon RWD M50B206S1/M50B206S2		Flexible Coupling	510597
	1990.04-1995.08		Front	Saloon RWD M50B206S1/M50B206S2		Flexible Coupling	510641
	1990.04-1995.08		Front	Saloon RWD M50B206S1/M50B206S2	Width:32mm	Flexible Coupling Kit	510597S
	1990.04-1995.08		Front	Saloon RWD M50B206S1/M50B206S2	Width:28mm	Flexible Coupling Kit	510641S
	1996.01-2003.06	AT	Rear	Saloon RWD M52B206S3/M52B206S4		Propshaft	PS901436
	1996.01-2003.06	AT/MT	Rear	Saloon RWD M52B206S3/M52B206S4	Date from:2000.06	Joint,propshaft	605200
	1996.01-2003.06		Centre	Saloon RWD M52B206S3/M52B206S4	with bearing,Installation Height:46mm	Center Bearing Support	538661
	1996.01-2003.06		Centre	Saloon RWD M52B206S3/M52B206S4	with bearing,Installation Height:45mm	Center Bearing Support	538679
	1996.01-2003.06		Front	Saloon RWD M52B206S3/M52B206S4		Flexible Coupling	510596
	1996.01-2003.06		Front	Saloon RWD M52B206S3/M52B206S4		Flexible Coupling	510597
	1996.01-2003.06		Front	Saloon RWD M52B206S3/M52B206S4		Flexible Coupling Kit	510597S
2.0 (115 kw)	2007.09-2010.02		Centre	Saloon RWD N46B20B		Center Bearing Support	538673
	2007.09-2010.02		Front	Saloon RWD N46B20B	Bolt Hole Centres:96mm,Width:30mm	Flexible Coupling	510596
	2007.09-2010.02		Front	Saloon RWD N46B20B	Bolt Hole Centres:78mm	Flexible Coupling	510641
	2007.09-2010.02		Front	Saloon RWD N46B20B	Bolt Hole Centres:96mm,Width:32mm	Flexible Coupling	533422
	2007.09-2010.02		Front	Saloon RWD N46B20B		Flexible Coupling Kit	510641S

	YEAR	TRANSM.	FITTING POSITION	BODY STYLE & DRIVE TYPE & ENGINE	REMARKS	PRODUCT	GSP Ref.
BMW							
520i							
2.0 (115 kw)	2007.09-2010.02		Front	Saloon RWD N46B20B		Flexible Coupling Kit	533422S
2.0 (120 kw)	2007.09-2010.08		Front	Saloon RWD N43B20A		Flexible Coupling	510641
	2007.09-2010.08		Front	Saloon RWD N43B20A	AT	Flexible Coupling Kit	510641S
	2011.09-2016.10	AT	Rear	Saloon RWD N20B20A/N20B20B	Model year to:2013	Propshaft	PS901386
	2011.09-2016.10		Centre	Saloon RWD N20B20A/N20B20B		Center Bearing Support	538656
	2011.09-2016.10		Front	Saloon RWD N20B20A/N20B20B		Flexible Coupling	510596
	2011.09-2016.10		Front	Saloon RWD N20B20A/N20B20B		Flexible Coupling	537625
	2011.09-2016.10		Front;Rear	Saloon RWD N20B20A/N20B20B	Inner diameter:50mm	Flexible Coupling	533422
	2011.09-2016.10		Front;Rear	Saloon RWD N20B20A/N20B20B	Inner diameter:48.5mm	Flexible Coupling	537631
	2011.09-2016.10		Front	Saloon RWD N20B20A/N20B20B		Flexible Coupling Kit	510596S
	2011.09-2016.10		Front	Saloon RWD N20B20A/N20B20B		Flexible Coupling Kit	537625S
	2017.07-2020.06		Centre	Saloon RWD B48B20A/B48B20B		Center Bearing Support	538640
	2017.07-2020.06		Front	Saloon RWD B48B20A/B48B20B	Width:30mm	Flexible Coupling	510596
	2017.07-2020.06		Front	Saloon RWD B48B20A/B48B20B	Width:32mm	Flexible Coupling	533422
	2017.07-2020.06		Front	Saloon RWD B48B20A/B48B20B		Flexible Coupling Kit	533422S
	2020.07-2023.06		Centre	Saloon RWD B48B20A		Center Bearing Support	538640
	2020.07-2023.06		Front	Saloon RWD B48B20A	Width:30mm	Flexible Coupling	510596
	2020.07-2023.06		Front	Saloon RWD B48B20A	Width:32mm	Flexible Coupling	533422
2.0 (125 kw)	2007.09-2009.12		Centre	Saloon RWD N43B20A	Height:48mm	Center Bearing Support	538647
	2007.09-2009.12		Centre	Saloon RWD N43B20A	Height:50mm	Center Bearing Support	538673
	2007.09-2009.12		Front	Saloon RWD N43B20A	Bolt Hole Centres:96mm,Width:30mm	Flexible Coupling	510596
	2007.09-2009.12		Front	Saloon RWD N43B20A	Bolt Hole Centres:78mm	Flexible Coupling	510641
	2007.09-2009.12		Front	Saloon RWD N43B20A	Bolt Hole Centres:96mm,Width:32mm	Flexible Coupling	533422
	2007.09-2009.12		Front	Saloon RWD N43B20A		Flexible Coupling Kit	510641S
	2007.09-2009.12		Front	Saloon RWD N43B20A		Flexible Coupling Kit	533422S
2.0 (133 kw)	2023.07-		Front	Saloon RWD B48B20P/B48B20S		Flexible Coupling	510596
2.0 (135 kw)	2011.09-2016.10	AT	Rear	Saloon RWD N20B20A/N20B20B	Model year to:2013	Propshaft	PS901386
	2011.09-2016.10		Centre	Saloon RWD N20B20A/N20B20B		Center Bearing Support	538656
	2011.09-2016.10		Front	Saloon RWD N20B20A/N20B20B	Inner diameter:50mm	Flexible Coupling	510596
	2011.09-2016.10		Front	Saloon RWD N20B20A/N20B20B	Inner diameter:50mm,Width:32mm	Flexible Coupling	533422
	2011.09-2016.10		Front	Saloon RWD N20B20A/N20B20B	Inner diameter:50mm,Width:30mm	Flexible Coupling	537625
	2011.09-2016.10		Front	Saloon RWD N20B20A/N20B20B	Inner diameter:48.5mm	Flexible Coupling	537631
	2011.09-2016.10		Front	Saloon RWD N20B20A/N20B20B		Flexible Coupling Kit	510596S
	2011.09-2016.10		Front	Saloon RWD N20B20A/N20B20B		Flexible Coupling Kit	533422S
	2011.09-2016.10		Front	Saloon RWD N20B20A/N20B20B		Flexible Coupling Kit	537625S
	2017.07-2020.06		Centre	Saloon RWD B48B20A/B48B20B		Center Bearing Support	538640
	2017.07-2020.06		Front	Saloon RWD B48B20A/B48B20B	Width:30mm	Flexible Coupling	510596
	2017.07-2020.06		Front	Saloon RWD B48B20A/B48B20B	Width:32mm	Flexible Coupling	533422
	2017.07-2020.06		Front	Saloon RWD B48B20A/B48B20B		Flexible Coupling Kit	533422S
	2020.07-2023.06		Centre	Saloon RWD B48B20A		Center Bearing Support	538640
	2020.07-2023.06		Front	Saloon RWD B48B20A	Width:30mm	Flexible Coupling	510596
	2020.07-2023.06		Front	Saloon RWD B48B20A	Width:32mm	Flexible Coupling	533422
2.0 (153 kw)	2023.07-		Front	Saloon RWD B48B20P/B48B20S		Flexible Coupling	510596
2.0 (155 kw)	2017.07-2020.06		Centre	Saloon RWD B48B20A/B48B20B		Center Bearing Support	538640
	2017.07-2020.06		Front	Saloon RWD B48B20A/B48B20B	Width:30mm	Flexible Coupling	510596
	2017.07-2020.06		Front	Saloon RWD B48B20A/B48B20B	Width:32mm	Flexible Coupling	533422
2.2 (120 kw)	2000.09-2003.06	AT	Rear	Saloon RWD M54B226S1		Propshaft	PS901436
	2000.09-2003.06	AT/MT	Rear	Saloon RWD M54B226S1		Joint,propshaft	605200
	2000.09-2003.06		Front	Saloon RWD M54B226S1		Flexible Coupling	510597
2.2 (125 kw)	2000.09-2003.06	AT	Rear	Saloon RWD M54B226S1		Propshaft	PS901436
	2000.09-2003.06	AT/MT	Rear	Saloon RWD M54B226S1		Joint,propshaft	605200
	2000.09-2003.06		Centre	Saloon RWD M54B226S1	Installation Height:46mm	Center Bearing Support	538661
	2000.09-2003.06		Centre	Saloon RWD M54B226S1	Installation Height:45mm	Center Bearing Support	538679
	2000.09-2003.06		Front	Saloon RWD M54B226S1		Flexible Coupling	510596
	2000.09-2003.06		Front	Saloon RWD M54B226S1		Flexible Coupling	510597
	2000.09-2003.06		Front	Saloon RWD M54B226S1		Flexible Coupling Kit	510597S
	2003.06-2005.05	AT	Rear	Saloon RWD M54B226S1	Model year to:2007	Propshaft	PS900127
	2003.06-2005.05		Centre	Saloon RWD M54B226S1		Center Bearing Support	538647
	2003.06-2005.05		Front	Saloon RWD M54B226S1	Width:30mm	Flexible Coupling	510596
	2003.06-2005.05		Front	Saloon RWD M54B226S1	Width:32mm	Flexible Coupling	533422
	2003.06-2005.05		Front	Saloon RWD M54B226S1		Flexible Coupling Kit	533422S
520i Touring							
2.0 (100 kw)	1997.03-2001.08	AT	Rear	Estate RWD M52B206S3/M52B206S4		Propshaft	PS901436
	1997.03-2001.08	AT/MT	Rear	Estate RWD M52B206S3/M52B206S4	Date from:2000.06	Joint,propshaft	605200

	YEAR	TRANSM.	FITTING POSITION	BODY STYLE & DRIVE TYPE & ENGINE	REMARKS	PRODUCT	GSP Ref.
BMW **520i Touring**							
2.0 (100 kw)	1997.03-2001.08		Centre	Estate RWD M52B206S3/M52B206S4	Installation Height:46mm	Center Bearing Support	538661
	1997.03-2001.08		Centre	Estate RWD M52B206S3/M52B206S4	Installation Height:45mm	Center Bearing Support	538679
	1997.03-2001.08		Front	Estate RWD M52B206S3/M52B206S4		Flexible Coupling	510597
	1997.03-2001.08		Front	Estate RWD M52B206S3/M52B206S4	MT	Flexible Coupling Kit	510597S
2.0 (110 kw)	1991.07-1996.07		Centre	Estate RWD M50B206S1/M50B206S2		Center Bearing Support	538677
	1991.07-1996.07		Front	Estate RWD M50B206S1/M50B206S2		Flexible Coupling	510597
	1991.07-1996.07		Front	Estate RWD M50B206S1/M50B206S2		Flexible Coupling	510641
	1991.07-1996.07		Front	Estate RWD M50B206S1/M50B206S2	Width:32mm	Flexible Coupling Kit	510597S
	1991.07-1996.07		Front	Estate RWD M50B206S1/M50B206S2	Width:28mm	Flexible Coupling Kit	510641S
	1997.03-2001.08	AT	Rear	Estate RWD M52B206S3/M52B206S4		Propshaft	PS901436
	1997.03-2001.08	AT/MT	Rear	Estate RWD M52B206S3/M52B206S4	Date from:2000.06	Joint,propshaft	605200
	1997.03-2001.08		Centre	Estate RWD M52B206S3/M52B206S4	with bearing,Installation Height:46mm	Center Bearing Support	538661
	1997.03-2001.08		Centre	Estate RWD M52B206S3/M52B206S4	with bearing,Installation Height:45mm	Center Bearing Support	538679
	1997.03-2001.08		Front	Estate RWD M52B206S3/M52B206S4		Flexible Coupling	510596
	1997.03-2001.08		Front	Estate RWD M52B206S3/M52B206S4		Flexible Coupling	510597
	1997.03-2001.08		Front	Estate RWD M52B206S3/M52B206S4		Flexible Coupling Kit	510597S
2.0 (120 kw)	2007.09-2010.08		Front	Estate RWD N43B20A		Flexible Coupling	510641
	2007.09-2010.08		Front	Estate RWD N43B20A	AT	Flexible Coupling Kit	510641S
	2011.09-2017.02	AT	Rear	Estate RWD N20B20A/N20B20B	Model year to:2013	Propshaft	PS901386
	2011.09-2017.02		Centre	Estate RWD N20B20A/N20B20B		Center Bearing Support	538656
	2011.09-2017.02		Front	Estate RWD N20B20A/N20B20B		Flexible Coupling	510596
	2011.09-2017.02		Front	Estate RWD N20B20A/N20B20B		Flexible Coupling	537625
	2011.09-2017.02		Front;Rear	Estate RWD N20B20A/N20B20B	Inner diameter:50mm	Flexible Coupling	533422
	2011.09-2017.02		Front;Rear	Estate RWD N20B20A/N20B20B	Inner diameter:48.5mm	Flexible Coupling	537631
	2011.09-2017.02		Front	Estate RWD N20B20A/N20B20B		Flexible Coupling Kit	510596S
	2011.09-2017.02		Front	Estate RWD N20B20A/N20B20B		Flexible Coupling Kit	537625S
	2017.07-2020.06		Centre	Estate RWD B48B20A		Center Bearing Support	538640
	2017.07-2020.06		Front	Estate RWD B48B20A	Width:30mm;510596 and 537625 different structure	Flexible Coupling	510596
	2017.07-2020.06		Front	Estate RWD B48B20A	Width:32mm	Flexible Coupling	533422
	2017.07-2020.06		Front	Estate RWD B48B20A	537625 and 510596 different structure	Flexible Coupling	537625
	2017.07-2020.06		Front	Estate RWD B48B20A	Width:32mm	Flexible Coupling Kit	533422S
	2017.07-2020.06		Front	Estate RWD B48B20A	Width:30mm	Flexible Coupling Kit	537625S
	2020.07-		Centre	Estate RWD B48B20A		Center Bearing Support	538640
	2020.07-		Front	Estate RWD B48B20A	Width:30mm	Flexible Coupling	510596
	2020.07-		Front	Estate RWD B48B20A	Width:32mm	Flexible Coupling	533422
2.0 (125 kw)	2007.08-2010.05		Centre	Estate RWD N43B20A	Height:48mm	Center Bearing Support	538647
	2007.08-2010.05		Centre	Estate RWD N43B20A	Height:50mm	Center Bearing Support	538673
	2007.08-2010.05		Front	Estate RWD N43B20A	Bolt Hole Centres:96mm,Width:30mm	Flexible Coupling	510596
	2007.08-2010.05		Front	Estate RWD N43B20A	Bolt Hole Centres:78mm	Flexible Coupling	510641
	2007.08-2010.05		Front	Estate RWD N43B20A	Bolt Hole Centres:96mm,Width:32mm	Flexible Coupling	533422
	2007.08-2010.05		Front	Estate RWD N43B20A		Flexible Coupling Kit	510641S
	2007.08-2010.05		Front	Estate RWD N43B20A		Flexible Coupling Kit	533422S
2.0 (135 kw)	2011.09-2017.02	AT	Rear	Estate RWD N20B20A/N20B20B	Model year to:2013	Propshaft	PS901386
	2011.09-2017.02		Centre	Estate RWD N20B20A/N20B20B		Center Bearing Support	538656
	2011.09-2017.02		Front	Estate RWD N20B20A/N20B20B	Inner diameter:50mm	Flexible Coupling	510596
	2011.09-2017.02		Front	Estate RWD N20B20A/N20B20B	Inner diameter:50mm,Width:32mm	Flexible Coupling	533422
	2011.09-2017.02		Front	Estate RWD N20B20A/N20B20B	Inner diameter:50mm,Width:30mm	Flexible Coupling	537625
	2011.09-2017.02		Front	Estate RWD N20B20A/N20B20B	Inner diameter:48.5mm	Flexible Coupling	537631
	2011.09-2017.02		Front	Estate RWD N20B20A/N20B20B		Flexible Coupling Kit	510596S
	2011.09-2017.02		Front	Estate RWD N20B20A/N20B20B		Flexible Coupling Kit	533422S
	2011.09-2017.02		Front	Estate RWD N20B20A/N20B20B		Flexible Coupling Kit	537625S
	2017.07-2020.06		Centre	Estate RWD B48B20A		Center Bearing Support	538640
	2017.07-2020.06		Front	Estate RWD B48B20A	Width:30mm;510596 and 537625 different structure	Flexible Coupling	510596
	2017.07-2020.06		Front	Estate RWD B48B20A	Width:32mm	Flexible Coupling	533422
	2017.07-2020.06		Front	Estate RWD B48B20A	537625 and 510596 different structure	Flexible Coupling	537625
	2017.07-2020.06		Front	Estate RWD B48B20A	Width:32mm	Flexible Coupling Kit	533422S
	2017.07-2020.06		Front	Estate RWD B48B20A	Width:30mm	Flexible Coupling Kit	537625S
	2020.07-		Centre	Estate RWD B48B20A		Center Bearing Support	538640
	2020.07-		Front	Estate RWD B48B20A	Width:30mm	Flexible Coupling	510596
	2020.07-		Front	Estate RWD B48B20A	Width:32mm	Flexible Coupling	533422
2.0 (155 kw)	2017.07-2020.06		Centre	Estate RWD B48B20A		Center Bearing Support	538640
	2017.07-2020.06		Front	Estate RWD B48B20A	Width:30mm	Flexible Coupling	510596
	2017.07-2020.06		Front	Estate RWD B48B20A	Width:32mm	Flexible Coupling	533422

	YEAR	TRANSM.	FITTING POSITION	BODY STYLE & DRIVE TYPE & ENGINE	REMARKS	PRODUCT	GSP Ref.
BMW							
520i Touring							
2.2 (120 kw)	2000.09-2003.12	AT	Rear	Estate RWD M54B226S1		Propshaft	PS901436
	2000.09-2003.12	AT/MT	Rear	Estate RWD M54B226S1		Joint,propshaft	605200
	2000.09-2003.12		Front	Estate RWD M54B226S1		Flexible Coupling	510597
2.2 (125 kw)	2000.09-2003.12	AT	Rear	Estate RWD M54B226S1		Propshaft	PS901436
	2000.09-2003.12	AT/MT	Rear	Estate RWD M54B226S1		Joint,propshaft	605200
	2000.09-2003.12		Centre	Estate RWD M54B226S1	Installation Height:46mm	Center Bearing Support	538661
	2000.09-2003.12		Centre	Estate RWD M54B226S1	Installation Height:45mm	Center Bearing Support	538679
	2000.09-2003.12		Front	Estate RWD M54B226S1		Flexible Coupling	510596
	2000.09-2003.12		Front	Estate RWD M54B226S1		Flexible Coupling	510597
	2000.09-2003.12		Front	Estate RWD M54B226S1		Flexible Coupling Kit	510597S
523i							
2.5 (125 kw)	1995.09-2000.08	AT	Rear	Saloon RWD M52B256S3/M52B256S4	Date from:1998.10	Propshaft	PS901436
	1995.09-2000.08	AT	Rear	Saloon RWD M52B256S3/M52B256S4	Date to:1998.09	Propshaft	PS901500
	1995.09-2000.08	AT/MT	Rear	Saloon RWD M52B256S3/M52B256S4	Date from:1999.06	Joint,propshaft	605200
	1995.09-2000.08		Centre	Saloon RWD M52B256S3/M52B256S4		Center Bearing Support	538653
	1995.09-2000.08		Centre	Saloon RWD M52B256S3/M52B256S4		Center Bearing Support	538661
	1995.09-2000.08		Front	Saloon RWD M52B256S3/M52B256S4	MT,Date to:1996.09;AT	Flexible Coupling	510596
	1995.09-2000.08		Front	Saloon RWD M52B256S3/M52B256S4	MT,Date from:1996.09	Flexible Coupling	510597
	1995.09-2000.08		Front	Saloon RWD M52B256S3/M52B256S4	MT	Flexible Coupling Kit	510597S
2.5 (130 kw)	2004.10-2007.02	AT	Rear	Saloon RWD N52B25A/N52B25B/N52B25BE		Propshaft	PS900127
	2004.10-2007.02		Centre	Saloon RWD N52B25A/N52B25B/N52B25BE		Center Bearing Support	538647
	2004.10-2007.02		Front	Saloon RWD N52B25A/N52B25B/N52B25BE	Width:30mm	Flexible Coupling	510596
	2004.10-2007.02		Front	Saloon RWD N52B25A/N52B25B/N52B25BE	Width:32mm	Flexible Coupling	533422
	2004.10-2007.02		Front	Saloon RWD N52B25A/N52B25B/N52B25BE		Flexible Coupling Kit	533422S
2.5 (140 kw)	2007.03-2009.12		Centre	Saloon RWD N52B25A/N52B25BE/N53B25A		Center Bearing Support	538647
	2007.03-2009.12		Front	Saloon RWD N52B25A/N52B25BE/N53B25A	Width:30mm	Flexible Coupling	510596
	2007.03-2009.12		Front	Saloon RWD N52B25A/N52B25BE/N53B25A	Width:32mm	Flexible Coupling	533422
	2007.03-2009.12		Front	Saloon RWD N52B25A/N52B25BE/N53B25A		Flexible Coupling Kit	533422S
2.5 (150 kw)	2010.01-2011.08		Centre	Saloon RWD N52B25A/N52B25AF/N52B25B/N52B25BF		Center Bearing Support	538656
	2010.01-2011.08		Front	Saloon RWD N52B25A/N52B25AF/N52B25B/N52B25BF	Inner diameter:50mm;Width:30mm	Flexible Coupling	510596
	2010.01-2011.08		Front	Saloon RWD N52B25A/N52B25AF/N52B25B/N52B25BF	Width:32mm	Flexible Coupling	533422
	2010.01-2011.08		Front	Saloon RWD N52B25A/N52B25AF/N52B25B/N52B25BF		Flexible Coupling	537625
	2010.01-2011.08		Front	Saloon RWD N52B25A/N52B25AF/N52B25B/N52B25BF	Inner diameter:48.5mm	Flexible Coupling	537631
	2010.01-2011.08		Rear	Saloon RWD N52B25A/N52B25AF/N52B25B/N52B25BF		Flexible Coupling	533878
	2010.01-2011.08		Front	Saloon RWD N52B25A/N52B25AF/N52B25B/N52B25BF		Flexible Coupling Kit	533422S
	2010.01-2011.08		Front	Saloon RWD N52B25A/N52B25AF/N52B25B/N52B25BF	537625S and 538112S structure different	Flexible Coupling Kit	537625S
	2010.01-2011.08		Rear	Saloon RWD N52B25A/N52B25AF/N52B25B/N52B25BF	538112S and 537625S structure different	Flexible Coupling Kit	538112S
3.0 (150 kw)	2010.01-2011.08		Centre	Saloon RWD N53B30A		Center Bearing Support	538656
	2010.01-2011.08		Front	Saloon RWD N53B30A	Inner diameter:50mm,Width:30mm	Flexible Coupling	510596
	2010.01-2011.08		Front	Saloon RWD N53B30A	Width:32mm	Flexible Coupling	533422
	2010.01-2011.08		Front	Saloon RWD N53B30A	Width:29.5mm	Flexible Coupling	537625
	2010.01-2011.08		Front	Saloon RWD N53B30A	Inner diameter:48.5mm	Flexible Coupling	537631
	2010.01-2011.08		Rear	Saloon RWD N53B30A		Flexible Coupling	533878
	2010.01-2011.08		Front	Saloon RWD N53B30A		Flexible Coupling Kit	533422S
	2010.01-2011.08		Front	Saloon RWD N53B30A	Date from:2011.03	Flexible Coupling Kit	537625S
	2010.01-2011.08		Rear	Saloon RWD N53B30A	Date to:2011.03	Flexible Coupling Kit	538112S
3.0 (155 kw)	2010.01-2011.08		Centre	Saloon RWD N53B30A		Center Bearing Support	538656
	2010.01-2011.08		Front	Saloon RWD N53B30A	Inner diameter:50mm,Width:30mm;510596 and 537625 different structure	Flexible Coupling	510596
	2010.01-2011.08		Front	Saloon RWD N53B30A	Inner diameter:50mm,Width:32mm	Flexible Coupling	533422
	2010.01-2011.08		Front	Saloon RWD N53B30A	537625 and 510596 different structure	Flexible Coupling	537625
	2010.01-2011.08		Front	Saloon RWD N53B30A	Inner diameter:48.5mm	Flexible Coupling	537631
	2010.01-2011.08		Rear	Saloon RWD N53B30A		Flexible Coupling	533878
	2010.01-2011.08		Front	Saloon RWD N53B30A	Date from:2011.03	Flexible Coupling Kit	537625S
	2010.01-2011.08		Rear	Saloon RWD N53B30A	Date to:2011.03	Flexible Coupling Kit	538112S
523i Touring							
2.5 (120 kw)	1996.06-1998.09	AT	Rear	Estate RWD M52B256S3		Propshaft	PS901436
	1996.06-1998.09		Centre	Estate RWD M52B256S3		Center Bearing Support	538661
	1996.06-1998.09		Front	Estate RWD M52B256S3		Flexible Coupling	510596
	1996.06-1998.09		Front	Estate RWD M52B256S3		Flexible Coupling	510597
2.5 (125 kw)	1997.03-2000.09	AT	Rear	Estate RWD M52B256S3/M52B256S4		Propshaft	PS901436
	1997.03-2000.09	AT/MT	Rear	Estate RWD M52B256S3/M52B256S4	Date from:1999.06	Joint,propshaft	605200
	1997.03-2000.09		Centre	Estate RWD M52B256S3/M52B256S4	Date from:1997.04,Date to:1998.09	Center Bearing Support	538653
	1997.03-2000.09		Centre	Estate RWD M52B256S3/M52B256S4	Date from:1998.09	Center Bearing Support	538661
	1997.03-2000.09		Front	Estate RWD M52B256S3/M52B256S4	Inner diameter:50mm	Flexible Coupling	510596

	YEAR	TRANSM.	FITTING POSITION	BODY STYLE & DRIVE TYPE & ENGINE	REMARKS	PRODUCT	GSP Ref.
BMW							
523i Touring							
2.5 (125 kw)	1997.03-2000.09		Front	Estate RWD M52B256S3/M52B256S4	MT,Inner diameter:38.5mm	Flexible Coupling	510597
2.5 (130 kw)	2004.10-2007.02	AT	Rear	Estate RWD N52B25A/N52B25B/N52B25BE		Propshaft	PS900127
	2004.10-2007.02		Centre	Estate RWD N52B25A/N52B25B/N52B25BE		Center Bearing Support	538647
	2004.10-2007.02		Front	Estate RWD N52B25A/N52B25B/N52B25BE	Width:30mm	Flexible Coupling	510596
	2004.10-2007.02		Front	Estate RWD N52B25A/N52B25B/N52B25BE	Width:32mm	Flexible Coupling	533422
	2004.10-2007.02		Front	Estate RWD N52B25A/N52B25B/N52B25BE		Flexible Coupling Kit	533422S
2.5 (140 kw)	2007.03-2010.03		Centre	Estate RWD N52B25A/N53B25A		Center Bearing Support	538647
	2007.03-2010.03		Front	Estate RWD N52B25A/N53B25A	Width:30mm	Flexible Coupling	510596
	2007.03-2010.03		Front	Estate RWD N52B25A/N53B25A	Width:32mm	Flexible Coupling	533422
	2007.03-2010.03		Front	Estate RWD N52B25A/N53B25A		Flexible Coupling Kit	533422S
2.5 (150 kw)	2009.11-2011.12		Centre	Estate RWD N52B25A/N52B25AF/N52B25B		Center Bearing Support	538656
	2009.11-2011.12		Front	Estate RWD N52B25A/N52B25AF/N52B25B	Inner diameter:50mm,Width:30mm	Flexible Coupling	510596
	2009.11-2011.12		Front	Estate RWD N52B25A/N52B25AF/N52B25B	Width:32mm	Flexible Coupling	533422
	2009.11-2011.12		Front	Estate RWD N52B25A/N52B25AF/N52B25B	Width:29.5mm	Flexible Coupling	537625
	2009.11-2011.12		Front	Estate RWD N52B25A/N52B25AF/N52B25B	Inner diameter:48.5mm	Flexible Coupling	537631
	2009.11-2011.12		Rear	Estate RWD N52B25A/N52B25AF/N52B25B		Flexible Coupling	533878
	2009.11-2011.12		Front	Estate RWD N52B25A/N52B25AF/N52B25B		Flexible Coupling Kit	533422S
	2009.11-2011.12		Front	Estate RWD N52B25A/N52B25AF/N52B25B	Date from:2011.03	Flexible Coupling Kit	537625S
	2009.11-2011.12		Rear	Estate RWD N52B25A/N52B25AF/N52B25B	Date to:2011.03	Flexible Coupling Kit	538112S
3.0 (150 kw)	2010.09-2011.12		Centre	Estate RWD N53B30A		Center Bearing Support	538656
	2010.09-2011.12		Front	Estate RWD N53B30A	Inner diameter:50mm,Width:30mm	Flexible Coupling	510596
	2010.09-2011.12		Front	Estate RWD N53B30A	Width:32mm	Flexible Coupling	533422
	2010.09-2011.12		Front	Estate RWD N53B30A	Width:29.5mm	Flexible Coupling	537625
	2010.09-2011.12		Front	Estate RWD N53B30A	Inner diameter:48.5mm	Flexible Coupling	537631
	2010.09-2011.12		Rear	Estate RWD N53B30A		Flexible Coupling	533878
	2010.09-2011.12		Front	Estate RWD N53B30A		Flexible Coupling Kit	533422S
	2010.09-2011.12		Front	Estate RWD N53B30A	Date from:2011.03	Flexible Coupling Kit	537625S
	2010.09-2011.12		Rear	Estate RWD N53B30A	Date to:2011.03	Flexible Coupling Kit	538112S
525d							
2.0 (155 kw)	2011.09-2016.10		Centre	Saloon RWD N47D20D/N47S1D20D		Center Bearing Support	539905
	2011.09-2016.10		Front	Saloon RWD N47D20D/N47S1D20D	Inner diameter:50mm,Width:30mm	Flexible Coupling	510596
	2011.09-2016.10		Front	Saloon RWD N47D20D/N47S1D20D	Inner diameter:50mm,Width:32mm	Flexible Coupling	533422
	2011.09-2016.10		Front	Saloon RWD N47D20D/N47S1D20D		Flexible Coupling	537625
	2011.09-2016.10		Front	Saloon RWD N47D20D/N47S1D20D	Inner diameter:48.5mm	Flexible Coupling	537631
	2011.09-2016.10		Front;Rear	Saloon RWD N47D20D/N47S1D20D		Flexible Coupling	517955
	2011.09-2016.10		Front;Rear	Saloon RWD N47D20D/N47S1D20D		Flexible Coupling Kit	517955S
	2017.07-2019.06		Front;Rear	Saloon RWD B47D20B		Flexible Coupling	517955
	2017.07-2019.06		Front;Rear	Saloon RWD B47D20B		Flexible Coupling Kit	517955S
2.0 (160 kw)	2011.09-2016.10		Centre	Saloon RWD N47D20D		Center Bearing Support	539905
	2011.09-2016.10		Front	Saloon RWD N47D20D	Width:30mm	Flexible Coupling	510596
	2011.09-2016.10		Front	Saloon RWD N47D20D	Width:32mm	Flexible Coupling	533422
	2011.09-2016.10		Front	Saloon RWD N47D20D		Flexible Coupling	537625
	2011.09-2016.10		Front	Saloon RWD N47D20D	Width:30mm	Flexible Coupling	537631
	2011.09-2016.10		Front;Rear	Saloon RWD N47D20D		Flexible Coupling	517955
	2011.09-2016.10		Front;Rear	Saloon RWD N47D20D		Flexible Coupling Kit	517955S
2.0 (170 kw)	2017.07-2019.06		Front;Rear	Saloon RWD B47D20B		Flexible Coupling	517955
	2017.07-2019.06		Front;Rear	Saloon RWD B47D20B		Flexible Coupling Kit	517955S
2.5 (85 kw)	1993.03-1995.08		Centre	Saloon RWD M51D256T1		Center Bearing Support	538677
	1993.03-1995.08		Front	Saloon RWD M51D256T1		Flexible Coupling	510596
	1993.03-1995.08		Front	Saloon RWD M51D256T1		Flexible Coupling	510597
	1993.03-1995.08		Front	Saloon RWD M51D256T1		Flexible Coupling Kit	510597S
	1997.01-2003.06		Centre	Saloon RWD M51D256T1	with bearing,Installation Height:46mm	Center Bearing Support	538661
	1997.01-2003.06		Centre	Saloon RWD M51D256T1	with bearing,Installation Height:45mm	Center Bearing Support	538679
	1997.01-2003.06		Front	Saloon RWD M51D256T1		Flexible Coupling	510596
2.5 (105 kw)	1991.09-1995.08		Centre	Saloon RWD M51D256T1		Center Bearing Support	538677
	1991.09-1995.08		Front	Saloon RWD M51D256T1		Flexible Coupling	510596
	1996.01-2003.06	AT	Rear	Saloon RWD M51D256T1	Model year to:2000	Propshaft	PS901437
	1996.01-2003.06		Centre	Saloon RWD M51D256T1	with bearing,Installation Height:46mm	Center Bearing Support	538661
	1996.01-2003.06		Centre	Saloon RWD M51D256T1	with bearing,Installation Height:45mm	Center Bearing Support	538679
	1996.01-2003.06		Front	Saloon RWD M51D256T1		Flexible Coupling	510596
2.5 (120 kw)	2000.02-2003.06		Centre	Saloon RWD M57D256D1		Center Bearing Support	538671
	2000.02-2003.06		Front	Saloon RWD M57D256D1		Flexible Coupling	510663
	2000.02-2003.06		Front	Saloon RWD M57D256D1		Flexible Coupling	530160
	2000.02-2003.06		Front	Saloon RWD M57D256D1	MT	Flexible Coupling Kit	530160S

	YEAR	TRANSM.	FITTING POSITION	BODY STYLE & DRIVE TYPE & ENGINE	REMARKS	PRODUCT	GSP Ref.
BMW							
525d							
2.5 (120 kw)	2004.12-2007.09	AT	Rear	Saloon RWD M57D256D2		Propshaft	PS901501
	2004.12-2007.09		Centre	Saloon RWD M57D256D2		Center Bearing Support	538647
	2004.12-2007.09		Front	Saloon RWD M57D256D2		Flexible Coupling	530160
	2004.12-2007.09		Front	Saloon RWD M57D256D2		Flexible Coupling Kit	530758S
2.5 (130 kw)	2004.03-2007.02	AT	Rear	Saloon RWD M57D256D2		Propshaft	PS901501
	2004.03-2007.02		Centre	Saloon RWD M57D256D2		Center Bearing Support	538647
	2004.03-2007.02		Centre	Saloon RWD M57D256D2		Center Bearing Support	538663
	2004.03-2007.02		Front	Saloon RWD M57D256D2	530160 and 530758 different structure	Flexible Coupling	530160
	2004.03-2007.02		Front	Saloon RWD M57D256D2	530758 and 530160 different structure	Flexible Coupling	530758
	2004.03-2007.02		Front	Saloon RWD M57D256D2		Flexible Coupling Kit	530758S
3.0 (145 kw)	2007.08-2008.08		Centre	Saloon 4WD M57D306D3		Center Bearing Support	538647
	2007.08-2008.08		Centre	Saloon 4WD M57D306D3		Center Bearing Support	538663
	2007.08-2008.08		Front	Saloon 4WD M57D306D3		Flexible Coupling	517956
	2007.08-2008.08		Front	Saloon 4WD M57D306D3		Flexible Coupling Kit	517956S
	2007.09-2010.02	AT	Rear	Saloon RWD M57D306D3		Propshaft	PS901501
	2007.09-2010.02		Centre	Saloon RWD M57D306D3		Center Bearing Support	538647
	2007.09-2010.02		Centre	Saloon RWD M57D306D3		Center Bearing Support	538663
	2007.09-2010.02		Front	Saloon RWD M57D306D3	530160 and 530758 different structure	Flexible Coupling	530160
	2007.09-2010.02		Front	Saloon RWD M57D306D3	530758 and 530160 different structure	Flexible Coupling	530758
	2007.09-2010.02		Front	Saloon RWD M57D306D3		Flexible Coupling Kit	530758S
3.0 (150 kw)	2010.03-2013.06		Centre	Saloon RWD N57D30A		Center Bearing Support	539905
	2010.03-2013.06		Front	Saloon RWD N57D30A		Flexible Coupling	537625
	2010.03-2013.06		Front;Rear	Saloon RWD N57D30A	AT	Flexible Coupling	517955
	2010.03-2013.06		Front;Rear	Saloon RWD N57D30A	MT	Flexible Coupling	537668
	2010.03-2013.06		Front	Saloon RWD N57D30A	MT	Flexible Coupling Kit	537668S
	2010.03-2013.06		Front;Rear	Saloon RWD N57D30A		Flexible Coupling Kit	517955S
525d Touring							
2.0 (155 kw)	2011.09-2017.02		Centre	Estate RWD N47D20D/N47S1D20D		Center Bearing Support	539905
	2011.09-2017.02		Front	Estate RWD N47D20D/N47S1D20D	Inner diameter:50mm,Width:30mm	Flexible Coupling	510596
	2011.09-2017.02		Front	Estate RWD N47D20D/N47S1D20D	Inner diameter:50mm,Width:32mm	Flexible Coupling	533422
	2011.09-2017.02		Front	Estate RWD N47D20D/N47S1D20D		Flexible Coupling	537625
	2011.09-2017.02		Front	Estate RWD N47D20D/N47S1D20D	Inner diameter:48.5mm	Flexible Coupling	537631
	2011.09-2017.02		Front;Rear	Estate RWD N47D20D/N47S1D20D		Flexible Coupling	517955
	2011.09-2017.02		Front;Rear	Estate RWD N47D20D/N47S1D20D		Flexible Coupling Kit	517955S
	2017.07-2019.06		Front;Rear	Estate RWD B47D20B		Flexible Coupling	517955
	2017.07-2019.06		Front;Rear	Estate RWD B47D20B		Flexible Coupling Kit	517955S
2.0 (160 kw)	2011.09-2017.02		Centre	Estate RWD N47D20D		Center Bearing Support	539905
	2011.09-2017.02		Front	Estate RWD N47D20D	Width:30mm	Flexible Coupling	510596
	2011.09-2017.02		Front	Estate RWD N47D20D	Width:32mm	Flexible Coupling	533422
	2011.09-2017.02		Front	Estate RWD N47D20D		Flexible Coupling	537625
	2011.09-2017.02		Front	Estate RWD N47D20D	Width:30mm	Flexible Coupling	537631
	2011.09-2017.02		Front;Rear	Estate RWD N47D20D		Flexible Coupling	517955
	2011.09-2017.02		Front;Rear	Estate RWD N47D20D		Flexible Coupling Kit	517955S
2.0 (170 kw)	2017.07-2019.06		Front;Rear	Estate RWD B47D20B		Flexible Coupling	517955
	2017.07-2019.06		Front;Rear	Estate RWD B47D20B		Flexible Coupling Kit	517955S
2.5 (85 kw)	1993.03-1996.07		Centre	Estate RWD M51D256T1		Center Bearing Support	538677
	1993.03-1996.07		Front	Estate RWD M51D256T1		Flexible Coupling	510596
	1993.03-1996.07		Front	Estate RWD M51D256T1		Flexible Coupling	510597
	1993.03-1996.07		Front	Estate RWD M51D256T1		Flexible Coupling Kit	510597S
2.5 (105 kw)	1991.12-1996.07		Centre	Estate RWD M51D256T1		Center Bearing Support	538677
	1991.12-1996.07		Front	Estate RWD M51D256T1		Flexible Coupling	510596
	1997.01-2004.05	AT	Rear	Estate RWD M51D256T1	Model year to:2000	Propshaft	PS901437
	1997.01-2004.05		Centre	Estate RWD M51D256T1	with bearing,Installation Height:46mm	Center Bearing Support	538661
	1997.01-2004.05		Centre	Estate RWD M51D256T1	with bearing,Installation Height:45mm	Center Bearing Support	538679
	1997.01-2004.05		Front	Estate RWD M51D256T1		Flexible Coupling	510596
2.5 (120 kw)	2000.09-2004.05		Centre	Estate RWD M57D256D1		Center Bearing Support	538671
	2000.09-2004.05		Front	Estate RWD M57D256D1		Flexible Coupling	510663
	2000.09-2004.05		Front	Estate RWD M57D256D1		Flexible Coupling	530160
	2000.09-2004.05		Front	Estate RWD M57D256D1	MT	Flexible Coupling Kit	530160S
	2004.06-2005.09	AT	Rear	Estate RWD M57D256D2		Propshaft	PS901501
	2004.06-2005.09		Centre	Estate RWD M57D256D2		Center Bearing Support	538647
	2004.06-2005.09		Centre	Estate RWD M57D256D2		Center Bearing Support	538663
	2004.06-2005.09		Front	Estate RWD M57D256D2	530160 and 530758 different structure	Flexible Coupling	530160
	2004.06-2005.09		Front	Estate RWD M57D256D2	530758 and 530160 different structure	Flexible Coupling	530758

	YEAR	TRANSM.	FITTING POSITION	BODY STYLE & DRIVE TYPE & ENGINE	REMARKS	PRODUCT	GSP Ref.
BMW							
525d Touring							
2.5 (120 kw)	2004.06-2005.09		Front	Estate RWD M57D256D2		Flexible Coupling Kit	530758S
2.5 (130 kw)	2004.09-2007.02	AT	Rear	Estate RWD M57D256D2		Propshaft	PS901501
	2004.09-2007.02		Centre	Estate RWD M57D256D2	Inner diameter:30mm	Center Bearing Support	538647
	2004.09-2007.02		Centre	Estate RWD M57D256D2	Inner diameter:35mm	Center Bearing Support	538663
	2004.09-2007.02		Front	Estate RWD M57D256D2		Flexible Coupling	530160
	2004.09-2007.02		Front	Estate RWD M57D256D2		Flexible Coupling Kit	530758S
3.0 (145 kw)	2007.03-2010.05	AT	Rear	Estate RWD M57D306D3		Propshaft	PS901501
	2007.03-2010.05		Centre	Estate RWD M57D306D3		Center Bearing Support	538647
	2007.03-2010.05		Centre	Estate RWD M57D306D3		Center Bearing Support	538663
	2007.03-2010.05		Front	Estate RWD M57D306D3	530160 and 530758 different structure	Flexible Coupling	530160
	2007.03-2010.05		Front	Estate RWD M57D306D3	530758 and 530160 different structure	Flexible Coupling	530758
	2007.03-2010.05		Front	Estate RWD M57D306D3		Flexible Coupling Kit	530758S
	2007.05-2008.08		Centre	Estate 4WD M57D306D3		Center Bearing Support	538647
	2007.05-2008.08		Centre	Estate 4WD M57D306D3		Center Bearing Support	538663
	2007.05-2008.08		Front	Estate 4WD M57D306D3		Flexible Coupling	517956
3.0 (150 kw)	2010.09-2011.08		Centre	Estate RWD N57D30A		Center Bearing Support	539905
	2010.09-2011.08		Front	Estate RWD N57D30A		Flexible Coupling	537625
	2010.09-2011.08		Front;Rear	Estate RWD N57D30A		Flexible Coupling	517955
	2010.09-2011.08		Front	Estate RWD N57D30A		Flexible Coupling Kit	537669S
	2010.09-2011.08		Front;Rear	Estate RWD N57D30A		Flexible Coupling Kit	517955S
525d xDrive							
2.0 (155 kw)	2011.09-2016.10	AT	Front	Saloon 4WD N47D20D		Propshaft	PS900138
	2011.09-2016.10		Centre	Saloon 4WD N47D20D		Center Bearing Support	539061
	2011.09-2016.10		Front	Saloon 4WD N47D20D	Inner diameter:50mm,Width:30mm	Flexible Coupling	510596
	2011.09-2016.10		Front	Saloon 4WD N47D20D	Inner diameter:50mm,Width:32mm	Flexible Coupling	533422
	2011.09-2016.10		Front	Saloon 4WD N47D20D		Flexible Coupling	537625
	2011.09-2016.10		Front	Saloon 4WD N47D20D	Inner diameter:48.5mm	Flexible Coupling	537631
	2011.09-2016.10		Front;Rear	Saloon 4WD N47D20D		Flexible Coupling	517955
	2011.09-2016.10		Front	Saloon 4WD N47D20D		Flexible Coupling Kit	537669S
	2011.09-2016.10		Front;Rear	Saloon 4WD N47D20D		Flexible Coupling Kit	517955S
2.0 (160 kw)	2011.09-2016.10	AT	Front	Saloon 4WD N47D20D		Propshaft	PS900138
	2011.09-2016.10		Centre	Saloon 4WD N47D20D		Center Bearing Support	539061
	2011.09-2016.10		Front	Saloon 4WD N47D20D	Width:30mm	Flexible Coupling	510596
	2011.09-2016.10		Front	Saloon 4WD N47D20D	Width:32mm	Flexible Coupling	533422
	2011.09-2016.10		Front	Saloon 4WD N47D20D		Flexible Coupling	537625
	2011.09-2016.10		Front	Saloon 4WD N47D20D	Width:30mm	Flexible Coupling	537631
	2011.09-2016.10		Front;Rear	Saloon 4WD N47D20D		Flexible Coupling	517955
	2011.09-2016.10		Front	Saloon 4WD N47D20D		Flexible Coupling Kit	537669S
	2011.09-2016.10		Front;Rear	Saloon 4WD N47D20D		Flexible Coupling Kit	517955S
3.0 (145 kw)	2008.09-2010.05		Centre	Saloon 4WD M57D306D3		Center Bearing Support	538663
525d xDrive Touring							
2.0 (155 kw)	2013.07-2017.02	AT	Front	Estate 4WD N47D20D		Propshaft	PS900138
	2013.07-2017.02		Centre	Estate 4WD N47D20D		Center Bearing Support	539061
	2013.07-2017.02		Front	Estate 4WD N47D20D	Inner diameter:50mm,Width:30mm	Flexible Coupling	510596
	2013.07-2017.02		Front	Estate 4WD N47D20D	Inner diameter:50mm,Width:32mm	Flexible Coupling	533422
	2013.07-2017.02		Front	Estate 4WD N47D20D		Flexible Coupling	537625
	2013.07-2017.02		Front	Estate 4WD N47D20D	Inner diameter:48.5mm	Flexible Coupling	537631
	2013.07-2017.02		Front;Rear	Estate 4WD N47D20D		Flexible Coupling	517955
2.0 (160 kw)	2013.07-2017.02	AT	Front	Estate 4WD N47D20D		Propshaft	PS900138
	2013.07-2017.02		Centre	Estate 4WD N47D20D		Center Bearing Support	539061
	2013.07-2017.02		Front	Estate 4WD N47D20D	Width:30mm	Flexible Coupling	510596
	2013.07-2017.02		Front	Estate 4WD N47D20D	Width:32mm	Flexible Coupling	533422
	2013.07-2017.02		Front	Estate 4WD N47D20D		Flexible Coupling	537625
	2013.07-2017.02		Front	Estate 4WD N47D20D	Width:30mm	Flexible Coupling	537631
	2013.07-2017.02		Front;Rear	Estate 4WD N47D20D		Flexible Coupling	517955
	2013.07-2017.02		Front	Estate 4WD N47D20D		Flexible Coupling Kit	537669S
	2013.07-2017.02		Front;Rear	Estate 4WD N47D20D		Flexible Coupling Kit	517955S
525i							
2.5 (137 kw)	2003.07-2009.12	AT	Rear	Saloon RWD M54 B25(256S5)	Model year to:2007	Propshaft	PS900127
2.5 (141 kw)	1990.03-1995.08		Centre	Saloon RWD M50B256S1/M50B256S2		Center Bearing Support	538677
	1990.03-1995.08		Front	Saloon RWD M50B256S1/M50B256S2		Flexible Coupling	510596
	1991.10-1995.08		Centre	Saloon 4WD M50B256S1/M50B256S2		Center Bearing Support	538677
	1991.10-1995.08		Front	Saloon 4WD M50B256S1/M50B256S2	Inner diameter:50mm,510596 and 537625 different structure	Flexible Coupling	510596
	1991.10-1995.08		Front	Saloon 4WD M50B256S1/M50B256S2	Inner diameter:38.5mm	Flexible Coupling	510641

	YEAR	TRANSM.	FITTING POSITION	BODY STYLE & DRIVE TYPE & ENGINE	REMARKS	PRODUCT	GSP Ref.
BMW							
525i							
2.5 (141 kw)	1991.10-1995.08		Front	Saloon 4WD M50B256S1/M50B256S2	Inner diameter:50mm,537625 and 510596 different structure	Flexible Coupling	537625
	1991.10-1995.08		Front	Saloon 4WD M50B256S1/M50B256S2	Inner diameter:48.5mm	Flexible Coupling	537631
	1991.10-1995.08		Front	Saloon 4WD M50B256S1/M50B256S2		Flexible Coupling Kit	510641S
	2000.09-2003.06	AT	Rear	Saloon RWD M54B256S5		Propshaft	PS901436
	2000.09-2003.06	AT/MT	Rear	Saloon RWD M54B256S5		Joint,propshaft	605200
	2000.09-2003.06		Centre	Saloon RWD M54B256S5	Installation Height:46mm	Center Bearing Support	538661
	2000.09-2003.06		Centre	Saloon RWD M54B256S5	Installation Height:45mm	Center Bearing Support	538679
	2000.09-2003.06		Front	Saloon RWD M54B256S5		Flexible Coupling	510596
	2000.09-2003.06		Front	Saloon RWD M54B256S5		Flexible Coupling	510597
	2000.09-2003.06		Front	Saloon RWD M54B256S5	MT	Flexible Coupling Kit	510597S
	2003.09-2005.02	AT	Rear	Saloon RWD M54B256S5		Propshaft	PS900127
	2003.09-2005.02		Centre	Saloon RWD M54B256S5		Center Bearing Support	538647
	2003.09-2005.02		Front	Saloon RWD M54B256S5	Width:30mm	Flexible Coupling	510596
	2003.09-2005.02		Front	Saloon RWD M54B256S5	Width:32mm	Flexible Coupling	533422
	2003.09-2005.02		Front	Saloon RWD M54B256S5		Flexible Coupling Kit	533422S
2.5 (155 kw)	2005.07-2010.03	AT	Rear	Saloon RWD N52B25A	Model year to:2007	Propshaft	PS900127
2.5 (160 kw)	2005.03-2009.12	AT	Rear	Saloon RWD N52B25A/N52B25B/N52B25BF	Model year to:2007	Propshaft	PS900127
	2005.03-2009.12		Centre	Saloon RWD N52B25A/N52B25B/N52B25BF		Center Bearing Support	538647
	2005.03-2009.12		Front	Saloon RWD N52B25A/N52B25B/N52B25BF	Width:30mm	Flexible Coupling	510596
	2005.03-2009.12		Front	Saloon RWD N52B25A/N52B25B/N52B25BF	Width:32mm	Flexible Coupling	533422
	2005.03-2009.12		Front	Saloon RWD N52B25A/N52B25B/N52B25BF		Flexible Coupling Kit	533422S
	2005.04-2007.02	AT	Front	Saloon 4WD N52B25A		Propshaft	PS900128
	2005.04-2007.02	AT	Rear	Saloon 4WD N52B25A		Propshaft	PS900129
	2005.04-2007.02		Centre	Saloon 4WD N52B25A		Center Bearing Support	538647
	2005.04-2007.02		Front	Saloon 4WD N52B25A		Flexible Coupling	517956
3.0 (160 kw)	2007.01-2010.03	AT	Rear	Saloon RWD N53B30A		Propshaft	PS900127
	2007.01-2010.03		Centre	Saloon RWD N53B30A		Center Bearing Support	538647
	2007.01-2010.03		Front	Saloon RWD N53B30A	Width:30mm	Flexible Coupling	510596
	2007.01-2010.03		Front	Saloon RWD N53B30A	Width:32mm	Flexible Coupling	533422
	2007.01-2010.03		Front	Saloon RWD N53B30A		Flexible Coupling Kit	533422S
	2007.03-2009.12		Centre	Saloon 4WD N53B30A		Center Bearing Support	538647
	2007.03-2009.12		Front	Saloon 4WD N53B30A		Flexible Coupling	517956
	2007.03-2009.12		Front	Saloon 4WD N53B30A		Flexible Coupling Kit	517956S
525i Touring							
2.5 (141 kw)	1991.07-1996.07		Centre	Estate RWD M50256S1/M50256S2		Center Bearing Support	538677
	1991.07-1996.07		Front	Estate RWD M50256S1/M50256S2		Flexible Coupling	510596
	1992.01-1996.03		Centre	Estate 4WD M50B256S1/M50B256S2		Center Bearing Support	538677
	1992.01-1996.03		Front	Estate 4WD M50B256S1/M50B256S2		Flexible Coupling	510596
	1992.01-1996.03		Front	Estate 4WD M50B256S1/M50B256S2		Flexible Coupling	510641
	1992.01-1996.03		Front	Estate 4WD M50B256S1/M50B256S2		Flexible Coupling	537631
	1992.01-1996.03		Front	Estate 4WD M50B256S1/M50B256S2		Flexible Coupling Kit	510641S
	2000.08-2004.05	AT	Rear	Estate RWD M54B256S5		Propshaft	PS901436
	2000.08-2004.05	AT/MT	Rear	Estate RWD M54B256S5		Joint,propshaft	605200
	2000.08-2004.05		Centre	Estate RWD M54B256S5	Installation Height:46mm	Center Bearing Support	538661
	2000.08-2004.05		Centre	Estate RWD M54B256S5	Installation Height:45mm	Center Bearing Support	538679
	2000.08-2004.05		Front	Estate RWD M54B256S5		Flexible Coupling	510596
	2004.06-2005.05	AT	Rear	Estate RWD M54B256S5	Model year to:2007	Propshaft	PS900127
	2004.06-2005.05		Centre	Estate RWD M54B256S5		Center Bearing Support	538647
	2004.06-2005.05		Front	Estate RWD M54B256S5	Width:30mm	Flexible Coupling	510596
	2004.06-2005.05		Front	Estate RWD M54B256S5	Width:32mm	Flexible Coupling	533422
	2004.06-2005.05		Front	Estate RWD M54B256S5		Flexible Coupling Kit	533422S
2.5 (155 kw)	2005.03-2010.05	AT	Rear	Estate RWD N52B25A	Model year to:2007	Propshaft	PS900127
2.5 (160 kw)	2004.10-2010.05	AT	Rear	Estate RWD N52B25A/N52B25B/N52B25BF	Model year to:2007	Propshaft	PS900127
	2004.10-2010.05		Centre	Estate RWD N52B25A/N52B25B/N52B25BF		Center Bearing Support	538647
	2004.10-2010.05		Front	Estate RWD N52B25A/N52B25B/N52B25BF	Width:30mm	Flexible Coupling	510596
	2004.10-2010.05		Front	Estate RWD N52B25A/N52B25B/N52B25BF	Width:32mm	Flexible Coupling	533422
	2004.10-2010.05		Front	Estate RWD N52B25A/N52B25B/N52B25BF		Flexible Coupling Kit	533422S
	2005.03-2007.02	AT	Front	Estate 4WD N52B25A	Model year to:2007	Propshaft	PS900128
	2005.03-2007.02	AT	Rear	Estate 4WD N52B25A	Model year to:2007	Propshaft	PS900129
	2005.03-2007.02		Centre	Estate 4WD N52B25A		Center Bearing Support	538647
	2005.03-2007.02		Front	Estate 4WD N52B25A		Flexible Coupling	517956
3.0 (160 kw)	2007.09-2008.08		Centre	Estate 4WD N53B30A		Center Bearing Support	538647
	2007.09-2008.08		Front	Estate 4WD N53B30A		Flexible Coupling	517956
	2007.09-2008.08		Front	Estate 4WD N53B30A		Flexible Coupling Kit	517956S

	YEAR	TRANSM.	FITTING POSITION	BODY STYLE & DRIVE TYPE & ENGINE	REMARKS	PRODUCT	GSP Ref.
BMW							
525i Touring							
3.0 (160 kw)	2007.09-2010.03		Centre	Estate RWD N53B30A		Center Bearing Support	538647
	2007.09-2010.03		Front	Estate RWD N53B30A	Width:30mm	Flexible Coupling	510596
	2007.09-2010.03		Front	Estate RWD N53B30A	Width:32mm	Flexible Coupling	533422
	2007.09-2010.03		Front	Estate RWD N53B30A		Flexible Coupling Kit	533422S
528i							
2.0 (180 kw)	2011.09-2016.10	AT	Rear	Saloon RWD N20B20A	Model year to:2013	Propshaft	PS901386
	2011.09-2016.10		Centre	Saloon RWD N20B20A		Center Bearing Support	538656
	2011.09-2016.10		Front	Saloon RWD N20B20A	Inner diameter:50mm	Flexible Coupling	510596
	2011.09-2016.10		Front	Saloon RWD N20B20A	Inner diameter:50mm,Width:32mm	Flexible Coupling	533422
	2011.09-2016.10		Front	Saloon RWD N20B20A	Inner diameter:50mm,Width:30mm	Flexible Coupling	537625
	2011.09-2016.10		Front	Saloon RWD N20B20A	Inner diameter:48.5mm	Flexible Coupling	537631
	2011.09-2016.10		Rear	Saloon RWD N20B20A		Flexible Coupling	533878
	2011.09-2016.10		Front	Saloon RWD N20B20A		Flexible Coupling Kit	510596S
	2011.09-2016.10		Front	Saloon RWD N20B20A		Flexible Coupling Kit	533422S
	2011.09-2016.10		Front	Saloon RWD N20B20A		Flexible Coupling Kit	537625S
2.8 (142 kw)	1995.09-2000.08	AT	Rear	Saloon RWD M52B286S1/M52B286S2	Date to:1998.09;for OE No.:26107523787	Propshaft	PS901436
	1995.09-2000.08	AT	Rear	Saloon RWD M52B286S1/M52B286S2	Date from:1998.10;for OE No.:26101229271	Propshaft	PS901437
	1995.09-2000.08	AT	Rear	Saloon RWD M52B286S1/M52B286S2	for OE No.:26101229422	Propshaft	PS901500
	1995.09-2000.08	AT/MT	Rear	Saloon RWD M52B286S1/M52B286S2	Date from:1999.06	Joint,propshaft	605200
	1995.09-2000.08		Centre	Saloon RWD M52B286S1/M52B286S2	with bearing,Installation Height:46mm	Center Bearing Support	538661
	1995.09-2000.08		Centre	Saloon RWD M52B286S1/M52B286S2	with bearing,Installation Height:45mm	Center Bearing Support	538679
	1995.09-2000.08		Front	Saloon RWD M52B286S1/M52B286S2		Flexible Coupling	510596
3.0 (179 kw)	2009.10-2011.08		Rear	Saloon RWD N52 B30 A	Date to:2011.03	Flexible Coupling Kit	538112S
3.0 (190 kw)	2010.03-2011.08		Centre	Saloon RWD N53B30A		Center Bearing Support	538656
	2010.03-2011.08		Front	Saloon RWD N53B30A	Inner diameter:50mm,Width:30mm	Flexible Coupling	510596
	2010.03-2011.08		Front	Saloon RWD N53B30A	Width:32mm	Flexible Coupling	533422
	2010.03-2011.08		Front	Saloon RWD N53B30A	Width:29.5mm	Flexible Coupling	537625
	2010.03-2011.08		Front	Saloon RWD N53B30A	Inner diameter:48.5mm	Flexible Coupling	537631
	2010.03-2011.08		Rear	Saloon RWD N53B30A		Flexible Coupling	533878
	2010.03-2011.08		Front	Saloon RWD N53B30A		Flexible Coupling Kit	533422S
	2010.03-2011.08		Front	Saloon RWD N53B30A	Date from:2011.03	Flexible Coupling Kit	537625S
	2010.03-2011.08		Rear	Saloon RWD N53B30A	Date to:2011.03	Flexible Coupling Kit	538112S
528i Gran Turismo							
2.0 (180 kw)	2013.07-2017.02	AT	Rear	Hatchback RWD N20B20A		Propshaft	PS901499
	2013.07-2017.02		Centre	Hatchback RWD N20B20A		Center Bearing Support	538656
	2013.07-2017.02		Front	Hatchback RWD N20B20A		Flexible Coupling	510596
	2013.07-2017.02		Front	Hatchback RWD N20B20A		Flexible Coupling	537625
	2013.07-2017.02		Front	Hatchback RWD N20B20A		Flexible Coupling Kit	510596S
	2013.07-2017.02		Front	Hatchback RWD N20B20A		Flexible Coupling Kit	537625S
528i Touring							
2.0 (180 kw)	2011.09-2017.02	AT	Rear	Estate RWD N20B20A	Model year to:2013	Propshaft	PS901386
	2011.09-2017.02		Centre	Estate RWD N20B20A		Center Bearing Support	538656
	2011.09-2017.02		Front	Estate RWD N20B20A	Inner diameter:50mm	Flexible Coupling	510596
	2011.09-2017.02		Front	Estate RWD N20B20A	Inner diameter:50mm,Width:32mm	Flexible Coupling	533422
	2011.09-2017.02		Front	Estate RWD N20B20A	Inner diameter:50mm,Width:30mm	Flexible Coupling	537625
	2011.09-2017.02		Front	Estate RWD N20B20A	Inner diameter:48.5mm	Flexible Coupling	537631
	2011.09-2017.02		Front	Estate RWD N20B20A		Flexible Coupling Kit	510596S
	2011.09-2017.02		Front	Estate RWD N20B20A		Flexible Coupling Kit	533422S
	2011.09-2017.02		Front	Estate RWD N20B20A		Flexible Coupling Kit	537625S
2.8 (142 kw)	1996.11-2000.08	AT	Rear	Estate RWD M52B286S1/M52B286S2	for OE No.:26101229422	Propshaft	PS901500
	1996.11-2000.08	AT/MT	Rear	Estate RWD M52B286S1/M52B286S2	Date to:1998.09;for OE No.:26107523787	Propshaft	PS901436
	1996.11-2000.08	AT/MT	Rear	Estate RWD M52B286S1/M52B286S2	Date from:1998.10;for OE No.:26101229271	Propshaft	PS901437
	1996.11-2000.08	AT/MT	Rear	Estate RWD M52B286S1/M52B286S2	Date to:1998.12	Joint,propshaft	605057
	1996.11-2000.08	AT/MT	Rear	Estate RWD M52B286S1/M52B286S2	Date from:1999.06	Joint,propshaft	605200
	1996.11-2000.08		Centre	Estate RWD M52B286S1/M52B286S2	with bearing,Installation Height:46mm	Center Bearing Support	538661
	1996.11-2000.08		Centre	Estate RWD M52B286S1/M52B286S2	with bearing,Installation Height:45mm	Center Bearing Support	538679
	1996.11-2000.08		Front	Estate RWD M52B286S1/M52B286S2		Flexible Coupling	510596
3.0 (190 kw)	2010.09-2013.06		Centre	Estate RWD N53B30A		Center Bearing Support	538656
	2010.09-2013.06		Front	Estate RWD N53B30A	Inner diameter:50mm,Width:30mm	Flexible Coupling	510596
	2010.09-2013.06		Front	Estate RWD N53B30A	Width:32mm	Flexible Coupling	533422
	2010.09-2013.06		Front	Estate RWD N53B30A	Width:29.5mm	Flexible Coupling	537625
	2010.09-2013.06		Front	Estate RWD N53B30A	Inner diameter:48.5mm	Flexible Coupling	537631
	2010.09-2013.06		Rear	Estate RWD N53B30A		Flexible Coupling	533878
	2010.09-2013.06		Front	Estate RWD N53B30A		Flexible Coupling Kit	533422S

	YEAR	TRANSM.	FITTING POSITION	BODY STYLE & DRIVE TYPE & ENGINE	REMARKS	PRODUCT	GSP Ref.
BMW							
528i Touring							
3.0 (190 kw)	2010.09-2013.06		Front	Estate RWD N53B30A	Date from:2011.03	Flexible Coupling Kit	537625S
	2010.09-2013.06		Rear	Estate RWD N53B30A	Date to:2011.03	Flexible Coupling Kit	538112S
528i xDrive							
2.0 (180 kw)	2011.09-2016.10	AT	Front	Saloon 4WD N20B20A		Propshaft	PS900138
	2011.09-2016.10		Centre	Saloon 4WD N20B20A		Center Bearing Support	539061
	2011.09-2016.10		Front	Saloon 4WD N20B20A	Width:30mm	Flexible Coupling	510596
	2011.09-2016.10		Front	Saloon 4WD N20B20A	Width:32mm	Flexible Coupling	533422
	2011.09-2016.10		Front	Saloon 4WD N20B20A		Flexible Coupling	537625
	2011.09-2016.10		Front	Saloon 4WD N20B20A	Width:30mm	Flexible Coupling	537631
	2011.09-2016.10		Front;Rear	Saloon 4WD N20B20A		Flexible Coupling	517955
	2011.09-2016.10		Front	Saloon 4WD N20B20A		Flexible Coupling Kit	537669S
	2011.09-2016.10		Front;Rear	Saloon 4WD N20B20A		Flexible Coupling Kit	517955S
528i xDrive Touring							
2.0 (180 kw)	2011.09-2017.02	AT	Front	Estate 4WD N20B20A		Propshaft	PS900138
	2011.09-2017.02		Centre	Estate 4WD N20B20A		Center Bearing Support	539061
	2011.09-2017.02		Front	Estate 4WD N20B20A	Width:30mm	Flexible Coupling	510596
	2011.09-2017.02		Front	Estate 4WD N20B20A	Width:32mm	Flexible Coupling	533422
	2011.09-2017.02		Front	Estate 4WD N20B20A		Flexible Coupling	537625
	2011.09-2017.02		Front	Estate 4WD N20B20A	Width:30mm	Flexible Coupling	537631
	2011.09-2017.02		Front;Rear	Estate 4WD N20B20A		Flexible Coupling	517955
	2011.09-2017.02		Front	Estate 4WD N20B20A		Flexible Coupling Kit	537669S
	2011.09-2017.02		Front;Rear	Estate 4WD N20B20A		Flexible Coupling Kit	517955S
530d							
3.0 (135 kw)	1998.05-2000.08		Centre	Saloon RWD M57D306D1		Center Bearing Support	538671
	1998.05-2000.08		Front	Saloon RWD M57D306D1		Flexible Coupling	510663
	1998.05-2000.08		Front	Saloon RWD M57D306D1		Flexible Coupling	530160
	1998.05-2000.08		Front	Saloon RWD M57D306D1	MT	Flexible Coupling Kit	530160S
3.0 (142 kw)	2000.09-2003.05		Centre	Saloon RWD M57D306D1		Center Bearing Support	538671
	2000.09-2003.05		Front	Saloon RWD M57D306D1		Flexible Coupling	510663
	2000.09-2003.05		Front	Saloon RWD M57D306D1		Flexible Coupling	530160
	2000.09-2003.05		Front	Saloon RWD M57D306D1	MT	Flexible Coupling Kit	530160S
3.0 (155 kw)	2003.07-2010.03	AT	Rear	Saloon RWD M57D306D2		Propshaft	PS901501
	2003.07-2010.03		Centre	Saloon RWD M57D306D2		Center Bearing Support	538663
	2003.07-2010.03		Front	Saloon RWD M57D306D2	530160 and 530758 different structure	Flexible Coupling	530160
	2003.07-2010.03		Front	Saloon RWD M57D306D2	530758 and 530160 different structure	Flexible Coupling	530758
	2003.07-2010.03		Front	Saloon RWD M57D306D2		Flexible Coupling Kit	530758S
3.0 (160 kw)	2003.06-2005.09	AT	Rear	Saloon RWD M57D306D2		Propshaft	PS901501
	2003.06-2005.09		Centre	Saloon RWD M57D306D2	Inner diameter:30mm	Center Bearing Support	538647
	2003.06-2005.09		Centre	Saloon RWD M57D306D2	Inner diameter:35mm	Center Bearing Support	538663
	2003.06-2005.09		Front	Saloon RWD M57D306D2	530160 and 530758 different structure	Flexible Coupling	530160
	2003.06-2005.09		Front	Saloon RWD M57D306D2	530758 and 530160 different structure	Flexible Coupling	530758
	2003.06-2005.09		Front	Saloon RWD M57D306D2		Flexible Coupling Kit	530758S
3.0 (170 kw)	2005.02-2007.02	AT	Front	Saloon 4WD M57D306D3		Propshaft	PS900128
	2005.02-2007.02	AT	Rear	Saloon 4WD M57D306D3		Propshaft	PS900129
	2005.02-2007.02		Centre	Saloon 4WD M57D306D3		Center Bearing Support	538647
	2005.02-2007.02		Centre	Saloon 4WD M57D306D3		Center Bearing Support	538663
	2005.02-2007.02		Front	Saloon 4WD M57D306D3		Flexible Coupling	517956
	2005.09-2007.03	AT	Rear	Saloon RWD M57D306D3		Propshaft	PS901501
	2005.09-2007.03		Centre	Saloon RWD M57D306D3		Center Bearing Support	538663
	2005.09-2007.03		Front	Saloon RWD M57D306D3	530160 and 530758 different structure	Flexible Coupling	530160
	2005.09-2007.03		Front	Saloon RWD M57D306D3	530758 and 530160 different structure	Flexible Coupling	530758
	2005.09-2007.03		Front	Saloon RWD M57D306D3		Flexible Coupling Kit	530758S
3.0 (173 kw)	2007.02-2009.12	AT	Rear	Saloon RWD M57D306D3		Propshaft	PS901501
	2007.02-2009.12		Centre	Saloon RWD M57D306D3		Center Bearing Support	538663
	2007.02-2009.12		Front	Saloon RWD M57D306D3	530160 and 530758 different structure	Flexible Coupling	530160
	2007.02-2009.12		Front	Saloon RWD M57D306D3	530758 and 530160 different structure	Flexible Coupling	530758
	2007.02-2009.12		Front	Saloon RWD M57D306D3		Flexible Coupling Kit	530758S
	2007.03-2007.08		Centre	Saloon 4WD M57D306D3		Center Bearing Support	538647
	2007.03-2007.08		Centre	Saloon 4WD M57D306D3		Center Bearing Support	538663
	2007.03-2007.08		Front	Saloon 4WD M57D306D3		Flexible Coupling	517956
	2007.03-2007.08		Front	Saloon 4WD M57D306D3		Flexible Coupling Kit	517956S
3.0 (180 kw)	2010.01-2011.08		Centre	Saloon RWD N57D30A		Center Bearing Support	539905
	2010.01-2011.08		Front;Rear	Saloon RWD N57D30A		Flexible Coupling	517955
	2010.01-2011.08		Front;Rear	Saloon RWD N57D30A		Flexible Coupling	537668

	YEAR	TRANSM.	FITTING POSITION	BODY STYLE & DRIVE TYPE & ENGINE	REMARKS	PRODUCT	GSP Ref.
BMW							
530d							
3.0 (180 kw)	2010.01-2011.08		Front	Saloon RWD N57D30A		Flexible Coupling Kit	537668S
	2010.01-2011.08		Rear	Saloon RWD N57D30A		Flexible Coupling Kit	517957S
	2010.01-2011.08		Front;Rear	Saloon RWD N57D30A		Flexible Coupling Kit	517955S
3.0 (183 kw)	2020.07-2023.06		Front;Rear	Saloon RWD B57D30B		Flexible Coupling	517955
	2020.07-2023.06		Front;Rear	Saloon RWD B57D30B		Flexible Coupling Kit	517955S
3.0 (190 kw)	2011.09-2016.10		Centre	Saloon RWD N57D30A		Center Bearing Support	539905
	2011.09-2016.10		Front;Rear	Saloon RWD N57D30A		Flexible Coupling	517955
	2011.09-2016.10		Front;Rear	Saloon RWD N57D30A		Flexible Coupling	537668
	2011.09-2016.10		Front	Saloon RWD N57D30A		Flexible Coupling Kit	537668S
	2011.09-2016.10		Rear	Saloon RWD N57D30A	MT	Flexible Coupling Kit	517957S
	2011.09-2016.10		Front;Rear	Saloon RWD N57D30A		Flexible Coupling Kit	517955S
3.0 (195 kw)	2016.09-2020.06		Front;Rear	Saloon RWD B57D30A		Flexible Coupling	517955
	2016.09-2020.06		Front;Rear	Saloon RWD B57D30A		Flexible Coupling Kit	517955S
3.0 (210 kw)	2010.09-2016.10		Centre	Saloon RWD N57D30A		Center Bearing Support	539905
	2010.09-2016.10		Front;Rear	Saloon RWD N57D30A	AT	Flexible Coupling	517955
	2010.09-2016.10		Front;Rear	Saloon RWD N57D30A	MT	Flexible Coupling	537668
	2010.09-2016.10		Front	Saloon RWD N57D30A	MT	Flexible Coupling Kit	537668S
	2010.09-2016.10		Front;Rear	Saloon RWD N57D30A		Flexible Coupling Kit	517955S
	2020.07-2023.06		Front;Rear	Saloon RWD B57D30B		Flexible Coupling	517955
	2020.07-2023.06		Front;Rear	Saloon RWD B57D30B		Flexible Coupling Kit	517955S
530d Gran Turismo							
3.0 (155 kw)	2010.09-2017.02	AT	Rear	Hatchback RWD N57D30A	Model year to:2012	Propshaft	PS901485
	2010.09-2017.02		Front;Rear	Hatchback RWD N57D30A		Flexible Coupling	517955
	2010.09-2017.02		Front	Hatchback RWD N57D30A		Flexible Coupling Kit	537669S
	2010.09-2017.02		Front;Rear	Hatchback RWD N57D30A		Flexible Coupling Kit	517955S
3.0 (180 kw)	2009.08-2012.06	AT	Rear	Hatchback RWD N57D30A		Propshaft	PS901485
	2009.08-2012.06		Centre	Hatchback RWD N57D30A		Center Bearing Support	539905
	2009.08-2012.06		Front;Rear	Hatchback RWD N57D30A		Flexible Coupling	517955
	2009.08-2012.06		Front	Hatchback RWD N57D30A		Flexible Coupling Kit	537669S
	2009.08-2012.06		Front;Rear	Hatchback RWD N57D30A		Flexible Coupling Kit	517955S
3.0 (190 kw)	2012.07-2017.02		Front;Rear	Hatchback RWD N57D30A		Flexible Coupling	517955
	2012.07-2017.02		Front;Rear	Hatchback RWD N57D30A		Flexible Coupling Kit	517955S
530d Touring							
3.0 (135 kw)	1998.05-2000.08		Centre	Estate RWD M57D306D1		Center Bearing Support	538671
	1998.05-2000.08		Front	Estate RWD M57D306D1		Flexible Coupling	510663
	1998.05-2000.08		Front	Estate RWD M57D306D1		Flexible Coupling	530160
	1998.05-2000.08		Front	Estate RWD M57D306D1	MT	Flexible Coupling Kit	530160S
3.0 (142 kw)	1998.09-2004.05		Centre	Estate RWD M57D306D1		Center Bearing Support	538671
	1998.09-2004.05		Front	Estate RWD M57D306D1		Flexible Coupling	510663
	1998.09-2004.05		Front	Estate RWD M57D306D1		Flexible Coupling	530160
	1998.09-2004.05		Front	Estate RWD M57D306D1	MT	Flexible Coupling Kit	530160S
3.0 (155 kw)	2005.11-2010.12	AT	Rear	Estate RWD M57D306D3		Propshaft	PS901501
	2005.11-2010.12		Front	Estate RWD M57D306D3		Flexible Coupling	530160
	2005.11-2010.12		Front	Estate RWD M57D306D3		Flexible Coupling Kit	530758S
3.0 (160 kw)	2003.10-2005.09	AT	Rear	Estate RWD M57D306D2		Propshaft	PS901501
	2003.10-2005.09		Centre	Estate RWD M57D306D2	Inner diameter:30mm	Center Bearing Support	538647
	2003.10-2005.09		Centre	Estate RWD M57D306D2	Inner diameter:35mm	Center Bearing Support	538663
	2003.10-2005.09		Front	Estate RWD M57D306D2	530160 and 530758 different structure	Flexible Coupling	530160
	2003.10-2005.09		Front	Estate RWD M57D306D2	530758 and 530160 different structure	Flexible Coupling	530758
	2003.10-2005.09		Front	Estate RWD M57D306D2		Flexible Coupling Kit	530758S
3.0 (170 kw)	2005.02-2007.02	AT	Front	Estate 4WD M57D306D3		Propshaft	PS900128
	2005.02-2007.02	AT	Rear	Estate 4WD M57D306D3		Propshaft	PS900129
	2005.02-2007.02	AT	Rear	Estate RWD M57D306D3		Propshaft	PS901501
	2005.02-2007.02		Centre	Estate 4WD M57D306D3		Center Bearing Support	538647
	2005.02-2007.02		Centre	Estate 4WD M57D306D3		Center Bearing Support	538663
	2005.02-2007.02		Centre	Estate RWD M57D306D3		Center Bearing Support	538663
	2005.02-2007.02		Front	Estate 4WD M57D306D3		Flexible Coupling	517956
	2005.02-2007.02		Front	Estate RWD M57D306D3	530160 and 530758 different structure	Flexible Coupling	530160
	2005.02-2007.02		Front	Estate RWD M57D306D3	530758 and 530160 different structure	Flexible Coupling	530758
	2005.02-2007.02		Front	Estate RWD M57D306D3		Flexible Coupling Kit	530758S
3.0 (173 kw)	2007.02-2010.05	AT	Rear	Estate RWD M57D306D3		Propshaft	PS901501
	2007.02-2010.05		Centre	Estate RWD M57D306D3		Center Bearing Support	538663
	2007.02-2010.05		Front	Estate RWD M57D306D3	530160 and 530758 different structure	Flexible Coupling	530160
	2007.02-2010.05		Front	Estate RWD M57D306D3	530758 and 530160 different structure	Flexible Coupling	530758

	YEAR	TRANSM.	FITTING POSITION	BODY STYLE & DRIVE TYPE & ENGINE	REMARKS	PRODUCT	GSP Ref.
BMW							
530d Touring							
3.0 (173 kw)	2007.02-2010.05		Front	Estate RWD M57D306D3		Flexible Coupling Kit	530758S
	2007.03-2007.08		Centre	Estate 4WD M57D306D3		Center Bearing Support	538647
	2007.03-2007.08		Centre	Estate 4WD M57D306D3		Center Bearing Support	538663
	2007.03-2007.08		Front	Estate 4WD M57D306D3		Flexible Coupling	517956
	2007.03-2007.08		Front	Estate 4WD M57D306D3		Flexible Coupling Kit	517956S
3.0 (180 kw)	2010.06-2011.08		Centre	Estate RWD N57D30A		Center Bearing Support	539905
	2010.06-2011.08		Front;Rear	Estate RWD N57D30A		Flexible Coupling	517955
	2010.06-2011.08		Front;Rear	Estate RWD N57D30A		Flexible Coupling	537668
	2010.06-2011.08		Front	Estate RWD N57D30A		Flexible Coupling Kit	537668S
	2010.06-2011.08		Rear	Estate RWD N57D30A	MT	Flexible Coupling Kit	517957S
	2010.06-2011.08		Front;Rear	Estate RWD N57D30A		Flexible Coupling Kit	517955S
3.0 (183 kw)	2020.07-		Front;Rear	Estate RWD B57D30B		Flexible Coupling Kit	517955S
3.0 (190 kw)	2011.09-2017.02		Centre	Estate RWD N57D30A		Center Bearing Support	539905
	2011.09-2017.02		Front;Rear	Estate RWD N57D30A		Flexible Coupling	517955
	2011.09-2017.02		Front;Rear	Estate RWD N57D30A		Flexible Coupling	537668
	2011.09-2017.02		Front	Estate RWD N57D30A		Flexible Coupling Kit	537668S
	2011.09-2017.02		Rear	Estate RWD N57D30A	MT	Flexible Coupling Kit	517957S
	2011.09-2017.02		Front;Rear	Estate RWD N57D30A		Flexible Coupling Kit	517955S
3.0 (195 kw)	2017.03-2020.06		Front;Rear	Estate RWD B57D30A		Flexible Coupling	517955
	2017.03-2020.06		Front;Rear	Estate RWD B57D30A		Flexible Coupling Kit	517955S
3.0 (210 kw)	2011.09-2017.02		Centre	Estate RWD N57D30A		Center Bearing Support	539905
	2011.09-2017.02		Front;Rear	Estate RWD N57D30A	6MT,8AT	Flexible Coupling	517955
	2011.09-2017.02		Front;Rear	Estate RWD N57D30A	MT	Flexible Coupling	537668
	2011.09-2017.02		Front	Estate RWD N57D30A	MT	Flexible Coupling Kit	537668S
	2011.09-2017.02		Front;Rear	Estate RWD N57D30A		Flexible Coupling Kit	517955S
	2020.07-		Front;Rear	Estate RWD B57D30B		Flexible Coupling Kit	517955S
530d xDrive							
3.0 (173 kw)	2007.09-2009.12		Centre	Saloon 4WD M57D306D3		Center Bearing Support	538663
3.0 (183 kw)	2016.09-2020.06		Front	Saloon 4WD B57D30A	Inner diameter:50mm	Flexible Coupling	537625
	2016.09-2020.06		Front	Saloon 4WD B57D30A	Inner diameter:48.5mm	Flexible Coupling	537631
	2016.09-2020.06		Front;Rear	Saloon 4WD B57D30A		Flexible Coupling	517955
	2020.07-2023.06		Front	Saloon 4WD B57D30B		Flexible Coupling	537631
	2020.07-2023.06		Front;Rear	Saloon 4WD B57D30B		Flexible Coupling	517955
3.0 (190 kw)	2011.03-2016.10	AT	Front	Saloon 4WD N57D30A		Propshaft	PS900138
	2011.03-2016.10		Front;Rear	Saloon 4WD N57D30A		Flexible Coupling	517955
	2011.03-2016.10		Front	Saloon 4WD N57D30A		Flexible Coupling Kit	537669S
	2011.03-2016.10		Front;Rear	Saloon 4WD N57D30A		Flexible Coupling Kit	517955S
3.0 (195 kw)	2016.09-2020.06		Front	Saloon 4WD B57D30A	Inner diameter:50mm	Flexible Coupling	537625
	2016.09-2020.06		Front	Saloon 4WD B57D30A	Inner diameter:48.5mm	Flexible Coupling	537631
	2016.09-2020.06		Front;Rear	Saloon 4WD B57D30A		Flexible Coupling	517955
3.0 (210 kw)	2011.03-2016.10	AT	Front	Saloon 4WD N57D30A		Propshaft	PS900138
	2011.03-2016.10		Front;Rear	Saloon 4WD N57D30A		Flexible Coupling	517955
	2011.03-2016.10		Front;Rear	Saloon 4WD N57D30A		Flexible Coupling Kit	517955S
	2020.07-2023.06		Front	Saloon 4WD B57D30B		Flexible Coupling	537631
	2020.07-2023.06		Front;Rear	Saloon 4WD B57D30B		Flexible Coupling	517955
530d xDrive Gran Turismo							
3.0 (180 kw)	2010.06-2012.06	AT	Front	Hatchback 4WD N57D30A		Propshaft	PS900138
	2010.06-2012.06		Centre	Hatchback 4WD N57D30A		Center Bearing Support	539905
	2010.06-2012.06		Front;Rear	Hatchback 4WD N57D30A		Flexible Coupling	517955
	2010.06-2012.06		Front	Hatchback 4WD N57D30A		Flexible Coupling Kit	537669S
	2010.06-2012.06		Front;Rear	Hatchback 4WD N57D30A		Flexible Coupling Kit	517955S
3.0 (190 kw)	2012.07-2017.02	AT	Front	Hatchback 4WD N57D30A		Propshaft	PS900138
	2012.07-2017.02		Front;Rear	Hatchback 4WD N57D30A		Flexible Coupling	517955
530d xDrive Touring							
3.0 (183 kw)	2020.07-		Front	Estate 4WD B57D30B		Flexible Coupling	537631
	2020.07-		Front;Rear	Estate 4WD B57D30B		Flexible Coupling	517955
3.0 (190 kw)	2011.03-2017.02	AT	Front	Estate 4WD N57D30A		Propshaft	PS900138
	2011.03-2017.02		Front;Rear	Estate 4WD N57D30A		Flexible Coupling	517955
	2011.03-2017.02		Front	Estate 4WD N57D30A		Flexible Coupling Kit	537669S
	2011.03-2017.02		Front;Rear	Estate 4WD N57D30A		Flexible Coupling Kit	517955S
3.0 (195 kw)	2017.03-		Front	Combi Van 4WD B57D30A		Flexible Coupling	537631
	2017.03-		Front;Rear	Combi Van 4WD B57D30A		Flexible Coupling	517955
	2017.03-2020.06		Front	Estate 4WD B57D30A		Flexible Coupling	537631
	2017.03-2020.06		Front;Rear	Estate 4WD B57D30A		Flexible Coupling	517955

	YEAR	TRANSM.	FITTING POSITION	BODY STYLE & DRIVE TYPE & ENGINE	REMARKS	PRODUCT	GSP Ref.
BMW							
530d xDrive Touring							
3.0 (195 kw)	2017.03-2020.06		Front	Estate 4WD B57D30A		Flexible Coupling Kit	537669S
3.0 (210 kw)	2011.03-2017.02	AT	Front	Estate 4WD N57D30A		Propshaft	PS900138
	2011.03-2017.02		Front;Rear	Estate 4WD N57D30A		Flexible Coupling	517955
	2011.03-2017.02		Front;Rear	Estate 4WD N57D30A		Flexible Coupling Kit	517955S
	2020.07-		Front	Estate 4WD B57D30B		Flexible Coupling	537631
	2020.07-		Front;Rear	Estate 4WD B57D30B		Flexible Coupling	517955
530e							
2.0 (170 kw)	2019.07-2020.06		Centre	Saloon RWD B48B20A		Center Bearing Support	538640
	2019.07-2020.06		Front;Rear	Saloon RWD B48B20A		Flexible Coupling	517955
	2019.07-2020.06		Front;Rear	Saloon RWD B48B20A		Flexible Coupling Kit	517955S
2.0 (185 kw)	2017.03-2020.06		Centre	Saloon RWD B48B20A		Center Bearing Support	538640
	2017.03-2020.06		Front;Rear	Saloon RWD B48B20A		Flexible Coupling	517955
	2017.03-2020.06		Front;Rear	Saloon RWD B48B20A		Flexible Coupling Kit	517955S
2.0 (200 kw)	2020.07-2023.06		Centre	Saloon RWD B48B20A		Center Bearing Support	538640
	2020.07-2023.06		Front;Rear	Saloon RWD B48B20A		Flexible Coupling	517955
	2020.07-2023.06		Front;Rear	Saloon RWD B48B20A		Flexible Coupling Kit	517955S
2.0 (215 kw)	2020.07-2023.06		Centre	Saloon RWD B46B20B/B48B20A		Center Bearing Support	538640
	2020.07-2023.06		Front;Rear	Saloon RWD B46B20B/B48B20A		Flexible Coupling	517955
	2020.07-2023.06		Front;Rear	Saloon RWD B46B20B/B48B20A		Flexible Coupling Kit	517955S
530e Touring							
2.0 (200 kw)	2020.11-		Front;Rear	Estate RWD B48B20A		Flexible Coupling	517955
	2020.11-		Front;Rear	Estate RWD B48B20A		Flexible Coupling Kit	517955S
2.0 (215 kw)	2020.11-		Front;Rear	Estate RWD B48B20A		Flexible Coupling	517955
	2020.11-		Front;Rear	Estate RWD B48B20A		Flexible Coupling Kit	517955S
530e xDrive							
2.0 (170 kw)	2019.07-2023.06		Centre	Saloon 4WD B48B20A		Center Bearing Support	538640
	2019.07-2023.06		Front	Saloon 4WD B48B20A	Inner diameter:50mm	Flexible Coupling	537625
	2019.07-2023.06		Front	Saloon 4WD B48B20A	Inner diameter:48.5mm	Flexible Coupling	537631
2.0 (185 kw)	2017.03-2023.06		Centre	Saloon 4WD B48B20A		Center Bearing Support	538640
	2017.03-2023.06		Front	Saloon 4WD B48B20A	Inner diameter:50mm	Flexible Coupling	537625
	2017.03-2023.06		Front	Saloon 4WD B48B20A	Inner diameter:48.5mm	Flexible Coupling	537631
2.0 (200 kw)	2020.07-2023.06		Centre	Saloon 4WD B48B20A		Center Bearing Support	538640
	2020.07-2023.06		Front	Saloon 4WD B48B20A	Inner diameter:50mm	Flexible Coupling	537625
	2020.07-2023.06		Front	Saloon 4WD B48B20A	Inner diameter:48.5mm	Flexible Coupling	537631
2.0 (215 kw)	2019.07-2023.06		Centre	Saloon 4WD B48B20A		Center Bearing Support	538640
	2019.07-2023.06		Front	Saloon 4WD B48B20A	Inner diameter:50mm	Flexible Coupling	537625
	2019.07-2023.06		Front	Saloon 4WD B48B20A	Inner diameter:48.5mm	Flexible Coupling	537631
530e xDrive Touring							
2.0 (200 kw)	2020.11-		Front	Estate 4WD B48B20A		Flexible Coupling	537631
2.0 (215 kw)	2020.11-		Front	Estate 4WD B48B20A		Flexible Coupling	537631
530i							
2.0 (180 kw)	2022.05-2023.06		Centre	Saloon RWD B46B20B/B48B20B		Center Bearing Support	538640
	2022.05-2023.06		Front	Saloon RWD B46B20B/B48B20B	Width:30mm	Flexible Coupling	510596
	2022.05-2023.06		Front	Saloon RWD B46B20B/B48B20B	Width:32mm	Flexible Coupling	533422
2.0 (185 kw)	2016.09-2020.06		Centre	Saloon RWD B46B20B/B48B20B		Center Bearing Support	538640
	2016.09-2020.06		Front	Saloon RWD B46B20B/B48B20B	Width:30mm	Flexible Coupling	510596
	2016.09-2020.06		Front	Saloon RWD B46B20B/B48B20B	Width:32mm	Flexible Coupling	533422
	2016.09-2020.06		Front	Saloon RWD B46B20B/B48B20B		Flexible Coupling Kit	533422S
	2020.07-2023.06		Centre	Saloon RWD B48B20B		Center Bearing Support	538640
	2020.07-2023.06		Front	Saloon RWD B48B20B	Width:30mm	Flexible Coupling	510596
	2020.07-2023.06		Front	Saloon RWD B48B20B	Width:32mm	Flexible Coupling	533422
3.0 (160 kw)	1992.09-1995.12		Centre	Saloon RWD M60B308S1		Center Bearing Support	538677
	1992.09-1995.12		Front	Saloon RWD M60B308S1		Flexible Coupling	510596
3.0 (168 kw)	2000.09-2003.06	AT	Rear	Saloon RWD M54 B30 (306S3)		Propshaft	PS901436
3.0 (170 kw)	2000.09-2003.06	AT	Rear	Saloon RWD M54B306S3		Propshaft	PS901436
	2000.09-2003.06	AT/MT	Rear	Saloon RWD M54B306S3	Date from:2000.06	Joint,propshaft	605200
	2000.09-2003.06		Centre	Saloon RWD M54B306S3	Installation Height:46mm	Center Bearing Support	538661
	2000.09-2003.06		Centre	Saloon RWD M54B306S3	Installation Height:45mm	Center Bearing Support	538679
	2000.09-2003.06		Front	Saloon RWD M54B306S3		Flexible Coupling	510596
	2003.07-2005.03		Centre	Saloon RWD M54B306S3		Center Bearing Support	538647
	2003.07-2005.03		Front	Saloon RWD M54B306S3	Width:30mm	Flexible Coupling	510596
	2003.07-2005.03		Front	Saloon RWD M54B306S3	Width:32mm	Flexible Coupling	533422
	2003.07-2005.03		Front	Saloon RWD M54B306S3		Flexible Coupling Kit	533422S

	YEAR	TRANSM.	FITTING POSITION	BODY STYLE & DRIVE TYPE & ENGINE	REMARKS	PRODUCT	GSP Ref.
BMW							
530i							
3.0 (187 kw)	2005.03-2010.03		Centre	Saloon RWD N52B30A		Center Bearing Support	538647
	2005.03-2010.03		Front	Saloon RWD N52B30A		Flexible Coupling	533422
	2005.03-2010.03		Front	Saloon RWD N52B30A		Flexible Coupling Kit	533422S
3.0 (190 kw)	2004.09-2007.02	AT	Front	Saloon 4WD N52B30A		Propshaft	PS900128
	2004.09-2007.02	AT	Rear	Saloon 4WD N52B30A		Propshaft	PS900129
	2004.09-2007.02		Centre	Saloon 4WD N52B30A		Center Bearing Support	538647
	2004.09-2007.02		Front	Saloon 4WD N52B30A		Flexible Coupling	517956
	2005.03-2007.03		Centre	Saloon RWD N52B30A/N52B30BF		Center Bearing Support	538647
	2005.03-2007.03		Front	Saloon RWD N52B30A/N52B30BF	Width:30mm	Flexible Coupling	510596
	2005.03-2007.03		Front	Saloon RWD N52B30A/N52B30BF	Width:32mm	Flexible Coupling	533422
	2005.03-2007.03		Front	Saloon RWD N52B30A/N52B30BF		Flexible Coupling Kit	533422S
	2010.03-2013.06		Centre	Saloon RWD N52B30A/N52B30AF/N52B30BF		Center Bearing Support	538656
	2010.03-2013.06		Front	Saloon RWD N52B30A/N52B30AF/N52B30BF		Flexible Coupling	510596
	2010.03-2013.06		Front	Saloon RWD N52B30A/N52B30AF/N52B30BF		Flexible Coupling	537625
	2010.03-2013.06		Rear	Saloon RWD N52B30A/N52B30AF/N52B30BF		Flexible Coupling	533878
	2010.03-2013.06		Front;Rear	Saloon RWD N52B30A/N52B30AF/N52B30BF	Inner diameter:50mm	Flexible Coupling	533422
	2010.03-2013.06		Front;Rear	Saloon RWD N52B30A/N52B30AF/N52B30BF	Inner diameter:48.5mm	Flexible Coupling	537631
	2010.03-2013.06		Front	Saloon RWD N52B30A/N52B30AF/N52B30BF	Date from:2011.03	Flexible Coupling Kit	537625S
	2010.03-2013.06		Rear	Saloon RWD N52B30A/N52B30AF/N52B30BF	Engine Code:N52 B30 A;Engine Code:N52 B30 AF,Date to:2011.03	Flexible Coupling Kit	538112S
3.0 (200 kw)	2007.02-2009.10		Centre	Saloon 4WD N52B30A/N53B30A		Center Bearing Support	538647
	2007.02-2009.10		Front	Saloon 4WD N52B30A/N53B30A		Flexible Coupling	517956
	2007.02-2009.10		Front	Saloon 4WD N52B30A/N53B30A		Flexible Coupling Kit	517956S
	2007.03-2009.12		Centre	Saloon RWD N52B30A/N52B30BF/N53B30A		Center Bearing Support	538647
	2007.03-2009.12		Front	Saloon RWD N52B30A/N52B30BF/N53B30A	Width:30mm	Flexible Coupling	510596
	2007.03-2009.12		Front	Saloon RWD N52B30A/N52B30BF/N53B30A	Width:32mm	Flexible Coupling	533422
	2007.03-2009.12		Front	Saloon RWD N52B30A/N52B30BF/N53B30A		Flexible Coupling Kit	533422S
	2011.05-2013.06		Centre	Saloon RWD N53B30A		Center Bearing Support	538656
	2011.05-2013.06		Front	Saloon RWD N53B30A	Inner diameter:50mm,Width:30mm	Flexible Coupling	510596
	2011.05-2013.06		Front	Saloon RWD N53B30A	Width:32mm	Flexible Coupling	533422
	2011.05-2013.06		Front	Saloon RWD N53B30A	Width:29.5mm	Flexible Coupling	537625
	2011.05-2013.06		Front	Saloon RWD N53B30A	Inner diameter:48.5mm	Flexible Coupling	537631
	2011.05-2013.06		Front	Saloon RWD N53B30A		Flexible Coupling Kit	533422S
	2011.05-2013.06		Front	Saloon RWD N53B30A		Flexible Coupling Kit	537625S
530i Touring							
2.0 (180 kw)	2022.05-		Centre	Estate RWD B48B20B		Center Bearing Support	538640
	2022.05-		Front	Estate RWD B48B20B	Width:30mm	Flexible Coupling	510596
	2022.05-		Front	Estate RWD B48B20B	Width:32mm	Flexible Coupling	533422
	2022.07-		Centre	Estate RWD B48B20B		Center Bearing Support	538640
	2022.07-		Front	Estate RWD B48B20B	Width:30mm	Flexible Coupling	510596
	2022.07-		Front	Estate RWD B48B20B	Width:32mm	Flexible Coupling	533422
2.0 (185 kw)	2017.03-2020.06		Centre	Estate RWD B48B20B		Center Bearing Support	538640
	2017.03-2020.06		Front	Estate RWD B48B20B	Width:30mm;510596 and 537625 different structure	Flexible Coupling	510596
	2017.03-2020.06		Front	Estate RWD B48B20B	Width:32mm	Flexible Coupling	533422
	2017.03-2020.06		Front	Estate RWD B48B20B	537625 and 510596 different structure	Flexible Coupling	537625
	2017.03-2020.06		Front	Estate RWD B48B20B	Width:32mm	Flexible Coupling Kit	533422S
	2017.03-2020.06		Front	Estate RWD B48B20B	Width:30mm	Flexible Coupling Kit	537625S
	2020.07-		Centre	Estate RWD B48B20B		Center Bearing Support	538640
	2020.07-		Front	Estate RWD B48B20B	Width:30mm	Flexible Coupling	510596
	2020.07-		Front	Estate RWD B48B20B	Width:32mm	Flexible Coupling	533422
3.0 (160 kw)	1992.09-1996.09		Centre	Estate RWD M60B308S1		Center Bearing Support	538677
	1992.09-1996.09		Front	Estate RWD M60B308S1	Inner diameter:50mm	Flexible Coupling	510596
	1992.09-1996.09		Front	Estate RWD M60B308S1	Inner diameter:53mm	Flexible Coupling	510663
3.0 (170 kw)	2000.09-2003.12	AT	Rear	Estate RWD M54B306S3		Propshaft	PS901436
	2000.09-2003.12	AT/MT	Rear	Estate RWD M54B306S3		Joint,propshaft	605057
	2000.09-2003.12		Centre	Estate RWD M54B306S3	Installation Height:46mm	Center Bearing Support	538661
	2000.09-2003.12		Centre	Estate RWD M54B306S3	Installation Height:45mm	Center Bearing Support	538679
	2000.09-2003.12		Front	Estate RWD M54B306S3		Flexible Coupling	510596
3.0 (190 kw)	2004.09-2007.02		Centre	Estate RWD N52B30A/N52B30BF		Center Bearing Support	538647
	2004.09-2007.02		Front	Estate RWD N52B30A/N52B30BF	Width:30mm	Flexible Coupling	510596
	2004.09-2007.02		Front	Estate RWD N52B30A/N52B30BF	Width:32mm	Flexible Coupling	533422
	2004.09-2007.02		Front	Estate RWD N52B30A/N52B30BF		Flexible Coupling Kit	533422S
	2005.04-2007.02	AT	Front	Estate 4WD N52B30A		Propshaft	PS900128
	2005.04-2007.02	AT	Rear	Estate 4WD N52B30A		Propshaft	PS900129
	2005.04-2007.02		Centre	Estate 4WD N52B30A		Center Bearing Support	538647

	YEAR	TRANSM.	FITTING POSITION	BODY STYLE & DRIVE TYPE & ENGINE	REMARKS	PRODUCT	GSP Ref.
BMW							
530i Touring							
3.0 (190 kw)	2005.04-2007.02		Front	Estate 4WD N52B30A		Flexible Coupling	517956
	2010.03-2013.06		Centre	Estate RWD N52B30A/N52B30AF		Center Bearing Support	538656
	2010.03-2013.06		Front	Estate RWD N52B30A/N52B30AF	Inner diameter:50mm,Width:30mm;510596 and 537625 different structure	Flexible Coupling	510596
	2010.03-2013.06		Front	Estate RWD N52B30A/N52B30AF	Inner diameter:50mm,Width:32mm	Flexible Coupling	533422
	2010.03-2013.06		Front	Estate RWD N52B30A/N52B30AF	537625 and 510596 different structure	Flexible Coupling	537625
	2010.03-2013.06		Front	Estate RWD N52B30A/N52B30AF	Inner diameter:48.5mm	Flexible Coupling	537631
	2010.03-2013.06		Rear	Estate RWD N52B30A/N52B30AF		Flexible Coupling	533878
	2010.03-2013.06		Front	Estate RWD N52B30A/N52B30AF	Date from:2011.03	Flexible Coupling Kit	537625S
	2010.03-2013.06		Rear	Estate RWD N52B30A/N52B30AF	Date to:2011.03	Flexible Coupling Kit	538112S
3.0 (200 kw)	2006.09-2008.09		Centre	Estate 4WD N52B30A/N53B30A		Center Bearing Support	538647
	2006.09-2008.09		Front	Estate 4WD N52B30A/N53B30A		Flexible Coupling	517956
	2006.09-2008.09		Front	Estate 4WD N52B30A/N53B30A		Flexible Coupling Kit	517956S
	2007.01-2010.12		Centre	Estate RWD N52B30A/N53B30A		Center Bearing Support	538647
	2007.01-2010.12		Front	Estate RWD N52B30A/N53B30A	Width:30mm	Flexible Coupling	510596
	2007.01-2010.12		Front	Estate RWD N52B30A/N53B30A	Width:32mm	Flexible Coupling	533422
	2007.01-2010.12		Front	Estate RWD N52B30A/N53B30A		Flexible Coupling Kit	533422S
	2011.07-2013.06		Centre	Estate RWD N53B30A		Center Bearing Support	538656
	2011.07-2013.06		Front	Estate RWD N53B30A	Inner diameter:50mm,Width:30mm	Flexible Coupling	510596
	2011.07-2013.06		Front	Estate RWD N53B30A	Width:32mm	Flexible Coupling	533422
	2011.07-2013.06		Front	Estate RWD N53B30A	Width:29.5mm	Flexible Coupling	537625
	2011.07-2013.06		Front	Estate RWD N53B30A	Inner diameter:48.5mm	Flexible Coupling	537631
	2011.07-2013.06		Front	Estate RWD N53B30A		Flexible Coupling Kit	533422S
	2011.07-2013.06		Front	Estate RWD N53B30A		Flexible Coupling Kit	537625S
530i xDrive							
2.0 (180 kw)	2022.05-2023.06		Centre	Saloon 4WD B46B20B/B48B20B		Center Bearing Support	538640
	2022.05-2023.06		Front	Saloon 4WD B46B20B/B48B20B	Inner diameter:50mm	Flexible Coupling	510596
	2022.05-2023.06		Front	Saloon 4WD B46B20B/B48B20B	Inner diameter:48.5mm	Flexible Coupling	537631
2.0 (183 kw)	2016.09-2023.06		Centre	Saloon 4WD B46B20B		Center Bearing Support	538640
	2016.09-2023.06		Front	Saloon 4WD B46B20B	Inner diameter:50mm;510596 and 537625 different structure	Flexible Coupling	510596
	2016.09-2023.06		Front	Saloon 4WD B46B20B	537625 and 510596 different structure	Flexible Coupling	537625
	2016.09-2023.06		Front	Saloon 4WD B46B20B	Inner diameter:48.5mm	Flexible Coupling	537631
2.0 (185 kw)	2016.09-2020.06		Centre	Saloon 4WD B46B20B/B48B20B		Center Bearing Support	538640
	2016.09-2020.06		Front	Saloon 4WD B46B20B/B48B20B	Inner diameter:50mm;510596 and 537625 different structure	Flexible Coupling	510596
	2016.09-2020.06		Front	Saloon 4WD B46B20B/B48B20B	537625 and 510596 different structure	Flexible Coupling	537625
	2016.09-2020.06		Front	Saloon 4WD B46B20B/B48B20B	Inner diameter:48.5mm	Flexible Coupling	537631
	2020.07-2023.06		Centre	Saloon 4WD B48B20B		Center Bearing Support	538640
	2020.07-2023.06		Front	Saloon 4WD B48B20B	Inner diameter:50mm	Flexible Coupling	510596
	2020.07-2023.06		Front	Saloon 4WD B48B20B		Flexible Coupling	537625
	2020.07-2023.06		Front	Saloon 4WD B48B20B	Inner diameter:48.5mm	Flexible Coupling	537631
3.0 (200 kw)	2008.09-2009.12		Centre	Saloon 4WD N53B30A		Center Bearing Support	538647
	2008.09-2009.12		Front	Saloon 4WD N53B30A		Flexible Coupling	517956
530i xDrive Touring							
2.0 (180 kw)	2022.05-		Centre	Estate 4WD B48B20B		Center Bearing Support	538640
	2022.05-		Front	Estate 4WD B48B20B	Inner diameter:50mm	Flexible Coupling	510596
	2022.05-		Front	Estate 4WD B48B20B	Inner diameter:48.5mm	Flexible Coupling	537631
	2022.07-		Centre	Estate 4WD B48B20B		Center Bearing Support	538640
	2022.07-		Front	Estate 4WD B48B20B	Inner diameter:50mm	Flexible Coupling	510596
	2022.07-		Front	Estate 4WD B48B20B	Inner diameter:48.5mm	Flexible Coupling	537631
2.0 (185 kw)	2017.07-2020.06		Centre	Estate 4WD B48B20B		Center Bearing Support	538640
	2017.07-2020.06		Front	Estate 4WD B48B20B	Inner diameter:50mm;510596 and 537625 different structure	Flexible Coupling	510596
	2017.07-2020.06		Front	Estate 4WD B48B20B	537625 and 510596 different structure	Flexible Coupling	537625
	2017.07-2020.06		Front	Estate 4WD B48B20B	Inner diameter:48.5mm	Flexible Coupling	537631
	2017.07-2020.06		Front	Estate 4WD B48B20B		Flexible Coupling Kit	537625S
	2020.07-		Centre	Estate 4WD B48B20B		Center Bearing Support	538640
	2020.07-		Front	Estate 4WD B48B20B	Inner diameter:50mm	Flexible Coupling	510596
	2020.07-		Front	Estate 4WD B48B20B	Inner diameter:48.5mm	Flexible Coupling	537631
535d							
3.0 (200 kw)	2004.08-2007.02		Centre	Saloon RWD M57D306D4		Center Bearing Support	538663
	2004.08-2007.02		Front	Saloon RWD M57D306D4	Inner diameter:44mm	Flexible Coupling	530160
	2004.08-2007.02		Front	Saloon RWD M57D306D4	Inner diameter:55mm	Flexible Coupling	537669
	2004.08-2007.02		Front;Rear	Saloon RWD M57D306D4	Date to:2005.09	Flexible Coupling	517955
	2004.08-2007.02		Front;Rear	Saloon RWD M57D306D4	Date from:2005.10	Flexible Coupling	537668
	2004.08-2007.02		Front	Saloon RWD M57D306D4	Inner diameter:43.5mm	Flexible Coupling Kit	530758S
	2004.08-2007.02		Front	Saloon RWD M57D306D4	Date from:2005.10,Inner diameter:56mm	Flexible Coupling Kit	537668S

	YEAR	TRANSM.	FITTING POSITION	BODY STYLE & DRIVE TYPE & ENGINE	REMARKS	PRODUCT	GSP Ref.
BMW							
535d							
3.0 (200 kw)	2004.08-2007.02		Front	Saloon RWD M57D306D4	Date to:2005.09,Inner diameter:55mm	Flexible Coupling Kit	537669S
	2004.08-2007.02		Rear	Saloon RWD M57D306D4		Flexible Coupling Kit	517957S
3.0 (210 kw)	2007.03-2010.03		Centre	Saloon RWD M57D306D5		Center Bearing Support	538663
	2007.03-2010.03		Front	Saloon RWD M57D306D5	530160 and 530758 different structure	Flexible Coupling	530160
	2007.03-2010.03		Front	Saloon RWD M57D306D5	530758 and 530160 different structure	Flexible Coupling	530758
	2007.03-2010.03		Front	Saloon RWD M57D306D5		Flexible Coupling Kit	530758S
	2007.03-2010.03		Front	Saloon RWD M57D306D5	Inner diameter:56mm	Flexible Coupling Kit	537668S
	2007.03-2010.03		Rear	Saloon RWD M57D306D5		Flexible Coupling Kit	517957S
3.0 (220 kw)	2010.09-2011.08		Centre	Saloon RWD N57D30B		Center Bearing Support	539905
	2010.09-2011.08		Front;Rear	Saloon RWD N57D30B		Flexible Coupling	517955
	2010.09-2011.08		Front;Rear	Saloon RWD N57D30B		Flexible Coupling	537668
	2010.09-2011.08		Front	Saloon RWD N57D30B	MT	Flexible Coupling Kit	537668S
	2010.09-2011.08		Rear	Saloon RWD N57D30B	MT	Flexible Coupling Kit	517957S
3.0 (230 kw)	2011.09-2016.10	8AT	Rear	Saloon RWD N57D30B		Propshaft	PS901894
	2011.09-2016.10		Centre	Saloon RWD N57D30B		Center Bearing Support	539905
	2011.09-2016.10		Front;Rear	Saloon RWD N57D30B		Flexible Coupling	517955
	2011.09-2016.10		Front;Rear	Saloon RWD N57D30B		Flexible Coupling	537668
	2011.09-2016.10		Front	Saloon RWD N57D30B		Flexible Coupling Kit	537668S
	2011.09-2016.10		Rear	Saloon RWD N57D30B	MT	Flexible Coupling Kit	517957S
	2011.09-2016.10		Front;Rear	Saloon RWD N57D30B		Flexible Coupling Kit	517955S
535d Gran Turismo							
3.0 (220 kw)	2010.03-2012.06		Centre	Hatchback RWD N57D30B		Center Bearing Support	539905
	2010.03-2012.06		Front;Rear	Hatchback RWD N57D30B		Flexible Coupling	537668
	2010.03-2012.06		Front	Hatchback RWD N57D30B		Flexible Coupling Kit	537668S
	2010.03-2012.06		Rear	Hatchback RWD N57D30B		Flexible Coupling Kit	517957S
3.0 (230 kw)	2012.07-2017.02		Front;Rear	Hatchback RWD N57D30B		Flexible Coupling	537668
	2012.07-2017.02		Front	Hatchback RWD N57D30B		Flexible Coupling Kit	537668S
	2012.07-2017.02		Rear	Hatchback RWD N57D30B		Flexible Coupling Kit	517957S
535d Touring							
3.0 (200 kw)	2004.08-2007.02		Centre	Estate RWD M57D306D4		Center Bearing Support	538663
	2004.08-2007.02		Front	Estate RWD M57D306D4	Inner diameter:44mm,530160 and 530758 different structure	Flexible Coupling	530160
	2004.08-2007.02		Front	Estate RWD M57D306D4	Inner diameter:43.5mm,530758 and 530160 different structure	Flexible Coupling	530758
	2004.08-2007.02		Front	Estate RWD M57D306D4	Inner diameter:55mm	Flexible Coupling	537669
	2004.08-2007.02		Front;Rear	Estate RWD M57D306D4	Date to:2005.09	Flexible Coupling	517955
	2004.08-2007.02		Front;Rear	Estate RWD M57D306D4	Date from:2005.10	Flexible Coupling	537668
	2004.08-2007.02		Front	Estate RWD M57D306D4	Inner diameter:43.5mm	Flexible Coupling Kit	530758S
	2004.08-2007.02		Front	Estate RWD M57D306D4	Date from:2005.10,Inner diameter:56mm	Flexible Coupling Kit	537668S
	2004.08-2007.02		Front	Estate RWD M57D306D4	Date to:2005.09,Inner diameter:55mm	Flexible Coupling Kit	537669S
	2004.08-2007.02		Rear	Estate RWD M57D306D4		Flexible Coupling Kit	517957S
3.0 (210 kw)	2007.03-2010.08		Centre	Estate RWD M57D306D5		Center Bearing Support	538663
	2007.03-2010.08		Front	Estate RWD M57D306D5		Flexible Coupling	530160
	2007.03-2010.08		Front	Estate RWD M57D306D5		Flexible Coupling Kit	530758S
	2007.03-2010.08		Front	Estate RWD M57D306D5	Inner diameter:56mm	Flexible Coupling Kit	537668S
	2007.03-2010.08		Rear	Estate RWD M57D306D5		Flexible Coupling Kit	517957S
3.0 (220 kw)	2010.09-2011.08		Centre	Estate RWD N57D30B		Center Bearing Support	539905
	2010.09-2011.08		Front;Rear	Estate RWD N57D30B		Flexible Coupling	537668
	2010.09-2011.08		Front	Estate RWD N57D30B		Flexible Coupling Kit	537668S
	2010.09-2011.08		Rear	Estate RWD N57D30B	MT	Flexible Coupling Kit	517957S
3.0 (230 kw)	2011.09-2017.02	8AT	Rear	Estate RWD N57D30B		Propshaft	PS901894
	2011.09-2017.02		Centre	Estate RWD N57D30B		Center Bearing Support	539905
	2011.09-2017.02		Front;Rear	Estate RWD N57D30B		Flexible Coupling	537668
	2011.09-2017.02		Front	Estate RWD N57D30B		Flexible Coupling Kit	537668S
	2011.09-2017.02		Rear	Estate RWD N57D30B	MT	Flexible Coupling Kit	517957S
535d xDrive							
3.0 (230 kw)	2011.02-2016.10	AT	Front	Saloon 4WD N57D30B		Propshaft	PS900138
	2011.02-2016.10		Front;Rear	Saloon 4WD N57D30B		Flexible Coupling	517955
	2011.02-2016.10		Front	Saloon 4WD N57D30B		Flexible Coupling Kit	537669S
	2011.02-2016.10		Front;Rear	Saloon 4WD N57D30B		Flexible Coupling Kit	517955S
535d xDrive Gran Turismo							
3.0 (220 kw)	2010.03-2012.06		Front;Rear	Hatchback 4WD N57D30B		Flexible Coupling	517955
	2010.03-2012.06		Front	Hatchback 4WD N57D30B		Flexible Coupling Kit	537669S
	2010.03-2012.06		Front;Rear	Hatchback 4WD N57D30B		Flexible Coupling Kit	517955S
3.0 (230 kw)	2012.07-2017.02		Front;Rear	Hatchback 4WD N57D30B		Flexible Coupling	517955
	2012.07-2017.02		Front	Hatchback 4WD N57D30B		Flexible Coupling Kit	537669S

	YEAR	TRANSM.	FITTING POSITION	BODY STYLE & DRIVE TYPE & ENGINE	REMARKS	PRODUCT	GSP Ref.
BMW							
535d xDrive Gran Turismo							
3.0 (230 kw)	2012.07-2017.02		Front;Rear	Hatchback 4WD N57D30B		Flexible Coupling Kit	517955S
535d xDrive Touring							
3.0 (230 kw)	2011.09-2017.02	AT	Front	Estate 4WD N57D30B		Propshaft	PS900138
	2011.09-2017.02		Front;Rear	Estate 4WD N57D30B		Flexible Coupling	517955
	2011.09-2017.02		Front	Estate 4WD N57D30B		Flexible Coupling Kit	537669S
	2011.09-2017.02		Front;Rear	Estate 4WD N57D30B		Flexible Coupling Kit	517955S
535i							
3.0 (224 kw)	2007.09-2010.03		Front;Rear	Saloon RWD N54 B30 A		Flexible Coupling Kit	517955S
3.0 (225 kw)	2005.08-2010.03		Centre	Saloon RWD N54B30A	Inner diameter:30mm	Center Bearing Support	538647
	2005.08-2010.03		Centre	Saloon RWD N54B30A	Inner diameter:35mm	Center Bearing Support	538663
	2005.08-2010.03		Front;Rear	Saloon RWD N54B30A		Flexible Coupling	517955
	2005.08-2010.03		Front	Saloon RWD N54B30A		Flexible Coupling Kit	537669S
	2005.08-2010.03		Front;Rear	Saloon RWD N54B30A		Flexible Coupling Kit	517955S
	2010.01-2016.10		Centre	Saloon RWD N55B30A		Center Bearing Support	538655
	2010.01-2016.10		Front;Rear	Saloon RWD N55B30A		Flexible Coupling	517955
	2010.01-2016.10		Front	Saloon RWD N55B30A		Flexible Coupling Kit	537669S
	2010.01-2016.10		Front;Rear	Saloon RWD N55B30A		Flexible Coupling Kit	517955S
3.0 (240 kw)	2013.07-2016.10		Centre	Saloon RWD N55B30A		Center Bearing Support	538655
	2013.07-2016.10		Front;Rear	Saloon RWD N55B30A		Flexible Coupling	517955
	2013.07-2016.10		Front	Saloon RWD N55B30A		Flexible Coupling Kit	537669S
	2013.07-2016.10		Front;Rear	Saloon RWD N55B30A		Flexible Coupling Kit	517955S
3.5 (173 kw)	1996.06-1998.08	AT/MT	Rear	Saloon RWD M62B358S1		Joint,propshaft	605057
	1996.06-1998.08		Front	Saloon RWD M62B358S1	Inner diameter:50mm,510596 and 537625 different structure	Flexible Coupling	510596
	1996.06-1998.08		Front	Saloon RWD M62B358S1	Inner diameter:50mm,537625 and 510596 different structure	Flexible Coupling	537625
	1996.06-1998.08		Front	Saloon RWD M62B358S1	Inner diameter:48.5mm	Flexible Coupling	537631
	1996.06-1998.08		Front	Saloon RWD M62B358S1		Flexible Coupling Kit	537631S
3.5 (180 kw)	1998.09-2003.06	AT/MT	Rear	Saloon RWD M62B358S2		Joint,propshaft	605057
	1998.09-2003.06		Front	Saloon RWD M62B358S2	510596 and 537625 different structure	Flexible Coupling	510596
	1998.09-2003.06		Front	Saloon RWD M62B358S2	537625 and 510596 different structure	Flexible Coupling	537625
	1998.09-2003.06		Front	Saloon RWD M62B358S2		Flexible Coupling Kit	537631S
535i Gran Turismo							
3.0 (225 kw)	2009.09-2017.02	AT	Rear	Hatchback RWD N55B30A	for OE No.:26107623697	Propshaft	PS901502
	2009.09-2017.02	AT	Rear	Hatchback RWD N55B30A	for OE No.:26107614659	Propshaft	PS901503
	2009.09-2017.02		Centre	Hatchback RWD N55B30A		Center Bearing Support	538655
	2009.09-2017.02		Front;Rear	Hatchback RWD N55B30A		Flexible Coupling	517955
	2009.09-2017.02		Front	Hatchback RWD N55B30A		Flexible Coupling Kit	537669S
	2009.09-2017.02		Front;Rear	Hatchback RWD N55B30A		Flexible Coupling Kit	517955S
535i Touring							
3.0 (225 kw)	2010.06-2017.02		Centre	Estate RWD N55B30A		Center Bearing Support	538655
	2010.06-2017.02		Front;Rear	Estate RWD N55B30A		Flexible Coupling	517955
	2010.06-2017.02		Front	Estate RWD N55B30A		Flexible Coupling Kit	537669S
	2010.06-2017.02		Front;Rear	Estate RWD N55B30A		Flexible Coupling Kit	517955S
3.0 (240 kw)	2013.07-2017.02		Centre	Estate RWD N55B30A		Center Bearing Support	538655
	2013.07-2017.02		Front;Rear	Estate RWD N55B30A		Flexible Coupling	517955
	2013.07-2017.02		Front;Rear	Estate RWD N55B30A		Flexible Coupling Kit	517955S
535i xDrive							
3.0 (225 kw)	2011.03-2016.10	AT	Front	Saloon 4WD N55B30A		Propshaft	PS900138
	2011.03-2016.10		Centre	Saloon 4WD N55B30A		Center Bearing Support	539061
	2011.03-2016.10		Front;Rear	Saloon 4WD N55B30A		Flexible Coupling	517955
	2011.03-2016.10		Front	Saloon 4WD N55B30A		Flexible Coupling Kit	537669S
	2011.03-2016.10		Front;Rear	Saloon 4WD N55B30A		Flexible Coupling Kit	517955S
3.0 (240 kw)	2013.07-2016.10	AT	Front	Saloon 4WD N55B30A		Propshaft	PS900138
	2013.07-2016.10		Centre	Saloon 4WD N55B30A		Center Bearing Support	539061
	2013.07-2016.10		Front;Rear	Saloon 4WD N55B30A		Flexible Coupling	517955
	2013.07-2016.10		Front	Saloon 4WD N55B30A		Flexible Coupling Kit	537669S
	2013.07-2016.10		Front;Rear	Saloon 4WD N55B30A		Flexible Coupling Kit	517955S
535i xDrive Gran Turismo							
3.0 (225 kw)	2010.09-2017.02	AT	Front	Hatchback 4WD N55B30A		Propshaft	PS900138
	2010.09-2017.02		Centre	Hatchback 4WD N55B30A	For OE No.26 11 7 589 746	Center Bearing Support	538640
	2010.09-2017.02		Centre	Hatchback 4WD N55B30A		Center Bearing Support	538656
	2010.09-2017.02		Front;Rear	Hatchback 4WD N55B30A		Flexible Coupling	517955
	2010.09-2017.02		Front	Hatchback 4WD N55B30A		Flexible Coupling Kit	537669S

	YEAR	TRANSM.	FITTING POSITION	BODY STYLE & DRIVE TYPE & ENGINE	REMARKS	PRODUCT	GSP Ref.
BMW							
535i xDrive Touring							
3.0 (225 kw)	2011.09-2017.02	AT	Front	Estate 4WD N55B30A		Propshaft	PS900138
	2011.09-2017.02		Centre	Estate 4WD N55B30A		Center Bearing Support	539061
	2011.09-2017.02		Front;Rear	Estate 4WD N55B30A		Flexible Coupling	517955
	2011.09-2017.02		Front	Estate 4WD N55B30A		Flexible Coupling Kit	537669S
	2011.09-2017.02		Front;Rear	Estate 4WD N55B30A		Flexible Coupling Kit	517955S
3.0 (240 kw)	2013.07-2017.02	AT	Front	Estate 4WD N55B30A		Propshaft	PS900138
	2013.07-2017.02		Centre	Estate 4WD N55B30A		Center Bearing Support	539061
	2013.07-2017.02		Front;Rear	Estate 4WD N55B30A		Flexible Coupling	517955
	2013.07-2017.02		Front;Rear	Estate 4WD N55B30A		Flexible Coupling Kit	517955S
540d xDrive							
3.0 (235 kw)	2017.07-2020.06		Front;Rear	Saloon 4WD B57D30B		Flexible Coupling	517955
3.0 (250 kw)	2020.07-2023.06		Front;Rear	Saloon 4WD B57D30B		Flexible Coupling	517955
540d xDrive Touring							
3.0 (235 kw)	2017.07-2020.06		Front	Estate 4WD B57D30B		Flexible Coupling	537631
	2017.07-2020.06		Front;Rear	Estate 4WD B57D30B		Flexible Coupling	517955
3.0 (250 kw)	2020.07-		Front	Estate 4WD B57D30B		Flexible Coupling	537631
	2020.07-		Front;Rear	Estate 4WD B57D30B		Flexible Coupling	517955
540i							
3.0 (245 kw)	2020.07-2023.05		Front;Rear	Saloon RWD B58B30C		Flexible Coupling	517955
	2020.07-2023.05		Front;Rear	Saloon RWD B58B30C		Flexible Coupling Kit	517955S
3.0 (250 kw)	2016.09-2020.06		Front;Rear	Saloon RWD B58B30A		Flexible Coupling	517955
	2016.09-2020.06		Front;Rear	Saloon RWD B58B30A		Flexible Coupling Kit	517955S
3.0 (265 kw)	2016.09-2020.06		Front;Rear	Saloon RWD B58B30A		Flexible Coupling	517955
	2016.09-2020.06		Front;Rear	Saloon RWD B58B30A		Flexible Coupling Kit	517955S
4.0 (210 kw)	1992.09-1995.12		Centre	Saloon RWD M60B408S1	Inner diameter:30mm	Center Bearing Support	538677
	1992.09-1995.12		Centre	Saloon RWD M60B408S1	Inner diameter:35mm	Center Bearing Support	539079
	1992.09-1995.12		Front	Saloon RWD M60B408S1		Flexible Coupling	510663
4.0 (220 kw)	2005.09-2007.02	AT	Rear	Saloon RWD N62B40A		Propshaft	PS900130
	2005.09-2007.02		Centre	Saloon RWD N62B40A	AT	Center Bearing Support	538647
	2005.09-2007.02		Centre	Saloon RWD N62B40A	MT	Center Bearing Support	538663
	2005.09-2007.02		Front	Saloon RWD N62B40A	530160 and 530758 different structure	Flexible Coupling	530160
	2005.09-2007.02		Front	Saloon RWD N62B40A	530758 and 530160 different structure	Flexible Coupling	530758
	2005.09-2007.02		Front;Rear	Saloon RWD N62B40A	AT	Flexible Coupling	517955
	2005.09-2007.02		Front	Saloon RWD N62B40A		Flexible Coupling Kit	530758S
	2005.09-2007.02		Front;Rear	Saloon RWD N62B40A		Flexible Coupling Kit	517955S
4.0 (225 kw)	2007.03-2009.12		Centre	Saloon RWD N62B40A		Center Bearing Support	538647
	2007.03-2009.12		Centre	Saloon RWD N62B40A		Center Bearing Support	538663
	2007.03-2009.12		Front	Saloon RWD N62B40A	530160 and 530758 different structure	Flexible Coupling	530160
	2007.03-2009.12		Front	Saloon RWD N62B40A	530758 and 530160 different structure	Flexible Coupling	530758
	2007.03-2009.12		Front;Rear	Saloon RWD N62B40A		Flexible Coupling	517955
	2007.03-2009.12		Front	Saloon RWD N62B40A		Flexible Coupling Kit	530758S
	2007.03-2009.12		Front;Rear	Saloon RWD N62B40A		Flexible Coupling Kit	517955S
4.4 (210 kw)	1996.03-2003.06		Centre	Saloon RWD M62B448S1/M62B448S2		Center Bearing Support	538679
	1996.03-2003.06		Front	Saloon RWD M62B448S1/M62B448S2		Flexible Coupling	510663
540i Touring							
4.0 (210 kw)	1993.09-1996.07		Centre	Estate RWD M60B408S1		Center Bearing Support	539079
	1993.09-1996.07		Front	Estate RWD M60B408S1		Flexible Coupling	510663
4.4 (210 kw)	1997.04-2003.12		Front	Estate RWD M62B448S1/M62B448S2		Flexible Coupling	510663
540i xDrive							
3.0 (245 kw)	2020.07-2023.06		Centre	Saloon 4WD B58B30C		Center Bearing Support	538640
	2020.07-2023.06		Front	Saloon 4WD B58B30C	Inner diameter:50mm	Flexible Coupling	537625
	2020.07-2023.06		Front	Saloon 4WD B58B30C	Inner diameter:48.5mm	Flexible Coupling	537631
	2020.07-2023.06		Front;Rear	Saloon 4WD B58B30C		Flexible Coupling	517955
3.0 (250 kw)	2016.09-2020.06		Centre	Saloon 4WD B58B30A		Center Bearing Support	538640
	2016.09-2020.06		Front	Saloon 4WD B58B30A	Inner diameter:50mm	Flexible Coupling	537625
	2016.09-2020.06		Front	Saloon 4WD B58B30A	Inner diameter:48.5mm	Flexible Coupling	537631
	2016.09-2020.06		Front;Rear	Saloon 4WD B58B30A		Flexible Coupling	517955
3.0 (265 kw)	2016.09-2020.06		Centre	Saloon 4WD B58B30A		Center Bearing Support	538640
	2016.09-2020.06		Front	Saloon 4WD B58B30A	Inner diameter:50mm	Flexible Coupling	537625
	2016.09-2020.06		Front	Saloon 4WD B58B30A	Inner diameter:48.5mm	Flexible Coupling	537631
	2016.09-2020.06		Front;Rear	Saloon 4WD B58B30A		Flexible Coupling	517955
	2016.09-2020.06		Front;Rear	Saloon 4WD B58B30A		Flexible Coupling Kit	517955S

	YEAR	TRANSM.	FITTING POSITION	BODY STYLE & DRIVE TYPE & ENGINE	REMARKS	PRODUCT	GSP Ref.
BMW							
540i xDrive Touring							
3.0 (245 kw)	2020.07-		Centre	Estate 4WD B58B30C		Center Bearing Support	538640
	2020.07-		Front	Estate 4WD B58B30C		Flexible Coupling	537631
	2020.07-		Front;Rear	Estate 4WD B58B30C		Flexible Coupling	517955
3.0 (250 kw)	2017.03-2020.06		Centre	Estate 4WD B58B30A		Center Bearing Support	538640
	2017.03-2020.06		Front	Estate 4WD B58B30A		Flexible Coupling	537631
	2017.03-2020.06		Front;Rear	Estate 4WD B58B30A		Flexible Coupling	517955
	2017.03-2020.06		Front	Estate 4WD B58B30A		Flexible Coupling Kit	537669S
	2017.03-2020.06		Front;Rear	Estate 4WD B58B30A		Flexible Coupling Kit	517955S
3.0 (265 kw)	2017.03-2020.06		Centre	Estate 4WD B58B30A		Center Bearing Support	538640
	2017.03-2020.06		Front	Estate 4WD B58B30A		Flexible Coupling	537631
	2017.03-2020.06		Front;Rear	Estate 4WD B58B30A		Flexible Coupling	517955
545e xDrive							
3.0 (290 kw)	2020.11-2023.06		Front;Rear	Saloon 4WD B58B30C		Flexible Coupling	517955
	2020.11-2023.06		Front;Rear	Saloon 4WD B58B30C		Flexible Coupling Kit	517955S
545i							
4.4 (245 kw)	2003.07-2005.08		Centre	Saloon RWD N62B44A		Center Bearing Support	538663
	2003.07-2005.08		Front	Saloon RWD N62B44A	Inner diameter:57.5mm	Flexible Coupling	517956
	2003.07-2005.08		Front	Saloon RWD N62B44A	Inner diameter:44mm	Flexible Coupling	530160
	2003.07-2005.08		Front	Saloon RWD N62B44A	Inner diameter:43.5mm	Flexible Coupling	530758
	2003.07-2005.08		Front	Saloon RWD N62B44A	Inner diameter:55mm	Flexible Coupling	537669
	2003.07-2005.08		Front;Rear	Saloon RWD N62B44A		Flexible Coupling	537668
	2003.07-2005.08		Front	Saloon RWD N62B44A	AT	Flexible Coupling Kit	537668S
	2003.07-2005.08		Rear	Saloon RWD N62B44A	AT	Flexible Coupling Kit	517957S
545i Touring							
4.4 (245 kw)	2004.06-2005.08		Centre	Estate RWD N62B44A		Center Bearing Support	538663
	2004.06-2005.08		Front	Estate RWD N62B44A	Inner diameter:57.5mm	Flexible Coupling	517956
	2004.06-2005.08		Front	Estate RWD N62B44A	Inner diameter:44mm	Flexible Coupling	530160
	2004.06-2005.08		Front	Estate RWD N62B44A	Inner diameter:43.5mm	Flexible Coupling	530758
	2004.06-2005.08		Front	Estate RWD N62B44A	Inner diameter:55mm	Flexible Coupling	537669
	2004.06-2005.08		Front;Rear	Estate RWD N62B44A	MT	Flexible Coupling	517955
	2004.06-2005.08		Front;Rear	Estate RWD N62B44A	AT;AMT	Flexible Coupling	537668
	2004.06-2005.08		Front	Estate RWD N62B44A	MT,Date from:2005.09	Flexible Coupling Kit	530758S
	2004.06-2005.08		Front	Estate RWD N62B44A	AT	Flexible Coupling Kit	537668S
	2004.06-2005.08		Front	Estate RWD N62B44A	MT,Date to:2005.02	Flexible Coupling Kit	537669S
	2004.06-2005.08		Rear	Estate RWD N62B44A	AT;AMT	Flexible Coupling Kit	517957S
550i							
4.4 (300 kw)	2010.03-2013.06	AT	Rear	Saloon RWD N63B44A	Date to:2011.09	Propshaft	PS901984
	2010.03-2013.06		Centre	Saloon RWD N63B44A		Center Bearing Support	539905
	2010.03-2013.06		Front;Rear	Saloon RWD N63B44A		Flexible Coupling	537668
	2010.03-2013.06		Front	Saloon RWD N63B44A		Flexible Coupling Kit	537668S
	2010.03-2013.06		Rear	Saloon RWD N63B44A		Flexible Coupling Kit	517957S
4.4 (330 kw)	2013.07-2016.10		Centre	Saloon RWD N63B44B		Center Bearing Support	539905
	2013.07-2016.10		Front;Rear	Saloon RWD N63B44B		Flexible Coupling	537668
	2013.07-2016.10		Front	Saloon RWD N63B44B		Flexible Coupling Kit	537668S
	2013.07-2016.10		Rear	Saloon RWD N63B44B		Flexible Coupling Kit	517957S
4.8 (270 kw)	2005.09-2009.12	AT	Rear	Saloon RWD N62B48B	Model year to:2007	Propshaft	PS900130
	2005.09-2009.12		Centre	Saloon RWD N62B48B		Center Bearing Support	538647
	2005.09-2009.12		Centre	Saloon RWD N62B48B		Center Bearing Support	538663
	2005.09-2009.12		Front	Saloon RWD N62B48B	530160 and 530758 different structure	Flexible Coupling	530160
	2005.09-2009.12		Front	Saloon RWD N62B48B	530758 and 530160 different structure	Flexible Coupling	530758
	2005.09-2009.12		Front;Rear	Saloon RWD N62B48B		Flexible Coupling	517955
	2005.09-2009.12		Front	Saloon RWD N62B48B		Flexible Coupling Kit	530758S
	2005.09-2009.12		Front;Rear	Saloon RWD N62B48B		Flexible Coupling Kit	517955S
550i Gran Turismo							
4.4 (300 kw)	2009.08-2012.06	8AT	Rear	Hatchback RWD N63B44A		Propshaft	PS901894
	2009.08-2012.06		Centre	Hatchback RWD N63B44A		Center Bearing Support	539905
	2009.08-2012.06		Front;Rear	Hatchback RWD N63B44A	Bolt Hole Centres:105mm	Flexible Coupling	517955
	2009.08-2012.06		Front;Rear	Hatchback RWD N63B44A	Bolt Hole Centres:110mm	Flexible Coupling	537668
	2009.08-2012.06		Front	Hatchback RWD N63B44A		Flexible Coupling Kit	537668S
	2009.08-2012.06		Rear	Hatchback RWD N63B44A		Flexible Coupling Kit	517957S
4.4 (330 kw)	2012.07-2017.02	8AT	Rear	Hatchback RWD N63B44B		Propshaft	PS901894
	2012.07-2017.02		Front;Rear	Hatchback RWD N63B44B		Flexible Coupling	537668
	2012.07-2017.02		Front	Hatchback RWD N63B44B		Flexible Coupling Kit	537668S
	2012.07-2017.02		Rear	Hatchback RWD N63B44B		Flexible Coupling Kit	517957S

	YEAR	TRANSM.	FITTING POSITION	BODY STYLE & DRIVE TYPE & ENGINE	REMARKS	PRODUCT	GSP Ref.
BMW							
550i Touring							
4.4 (300 kw)	2010.03-2013.06	AT	Rear	Estate RWD N63B44A	Date to:2011.09	Propshaft	PS901984
	2010.03-2013.06		Centre	Estate RWD N63B44A		Center Bearing Support	539905
	2010.03-2013.06		Front;Rear	Estate RWD N63B44A		Flexible Coupling	537668
	2010.03-2013.06		Front	Estate RWD N63B44A		Flexible Coupling Kit	537668S
	2010.03-2013.06		Rear	Estate RWD N63B44A		Flexible Coupling Kit	517957S
4.4 (330 kw)	2013.07-2017.02		Centre	Estate RWD N63B44B		Center Bearing Support	539905
	2013.07-2017.02		Front;Rear	Estate RWD N63B44B		Flexible Coupling	537668
	2013.07-2017.02		Front	Estate RWD N63B44B		Flexible Coupling Kit	537668S
	2013.07-2017.02		Rear	Estate RWD N63B44B		Flexible Coupling Kit	517957S
4.8 (270 kw)	2005.06-2011.12	AT	Rear	Estate RWD N62B48B	Model year to:2007	Propshaft	PS900130
	2005.06-2011.12		Centre	Estate RWD N62B48B		Center Bearing Support	538663
	2005.06-2011.12		Front	Estate RWD N62B48B	530160 and 530758 different structure	Flexible Coupling	530160
	2005.06-2011.12		Front	Estate RWD N62B48B	530758 and 530160 different structure	Flexible Coupling	530758
	2005.06-2011.12		Front;Rear	Estate RWD N62B48B		Flexible Coupling	517955
	2005.06-2011.12		Front	Estate RWD N62B48B		Flexible Coupling Kit	530758S
	2005.06-2011.12		Front;Rear	Estate RWD N62B48B		Flexible Coupling Kit	517955S
550i xDrive							
4.4 (300 kw)	2010.09-2015.09	AT	Front	Saloon 4WD N63B44A		Propshaft	PS900138
	2010.09-2015.09		Front;Rear	Saloon 4WD N63B44A		Flexible Coupling	517955
	2010.09-2015.09		Front	Saloon 4WD N63B44A		Flexible Coupling Kit	537669S
	2010.09-2015.09		Front;Rear	Saloon 4WD N63B44A		Flexible Coupling Kit	517955S
4.4 (330 kw)	2013.07-2016.10	AT	Front	Saloon 4WD N63B44B		Propshaft	PS900138
	2013.07-2016.10		Front;Rear	Saloon 4WD N63B44B		Flexible Coupling	517955
	2013.07-2016.10		Front	Saloon 4WD N63B44B		Flexible Coupling Kit	537669S
	2013.07-2016.10		Front;Rear	Saloon 4WD N63B44B		Flexible Coupling Kit	517955S
550i xDrive Gran Turismo							
4.0 (300 kw)	2012.07-2017.02	AT	Front	Hatchback 4WD N63 B40 A		Propshaft	PS900138
4.4 (300 kw)	2010.06-2012.06	AT	Front	Hatchback 4WD N63B44A		Propshaft	PS900138
	2010.06-2012.06		Centre	Hatchback 4WD N63B44A		Center Bearing Support	539905
	2010.06-2012.06		Front;Rear	Hatchback 4WD N63B44A		Flexible Coupling	517955
	2010.06-2012.06		Front	Hatchback 4WD N63B44A		Flexible Coupling Kit	537669S
4.4 (330 kw)	2012.07-2017.02	AT	Front	Hatchback 4WD N63B44B		Propshaft	PS900138
	2012.07-2017.02		Front;Rear	Hatchback 4WD N63B44B		Flexible Coupling	517955
620d Gran Turismo							
2.0 (120 kw)	2018.07-2020.06		Centre	Hatchback RWD B47D20B		Center Bearing Support	538640
	2018.07-2020.06		Front;Rear	Hatchback RWD B47D20B		Flexible Coupling	517955
	2020.07-		Centre	Hatchback RWD B47D20B		Center Bearing Support	538640
	2020.07-		Front	Hatchback RWD B47D20B	Width:30mm	Flexible Coupling	510596
	2020.07-		Front	Hatchback RWD B47D20B	Width:32mm	Flexible Coupling	533422
	2020.07-		Front;Rear	Hatchback RWD B47D20B		Flexible Coupling	517955
2.0 (140 kw)	2018.07-2020.06		Centre	Hatchback RWD B47D20B		Center Bearing Support	538640
	2018.07-2020.06		Front;Rear	Hatchback RWD B47D20B		Flexible Coupling	517955
	2020.07-		Centre	Hatchback RWD B47D20B		Center Bearing Support	538640
	2020.07-		Front	Hatchback RWD B47D20B	Width:30mm	Flexible Coupling	510596
	2020.07-		Front	Hatchback RWD B47D20B	Width:32mm	Flexible Coupling	533422
	2020.07-		Front;Rear	Hatchback RWD B47D20B		Flexible Coupling	517955
620d xDrive Gran Turismo							
2.0 (120 kw)	2018.07-2020.06		Centre	Hatchback 4WD B47D20B		Center Bearing Support	538640
	2018.07-2020.06		Front;Rear	Hatchback 4WD B47D20B		Flexible Coupling	517955
2.0 (140 kw)	2018.07-2020.06		Centre	Hatchback 4WD B47D20B		Center Bearing Support	538640
	2018.07-2020.06		Front;Rear	Hatchback 4WD B47D20B		Flexible Coupling	517955
	2020.07-		Centre	Hatchback 4WD B47D20B		Center Bearing Support	538640
	2020.07-		Front	Hatchback 4WD B47D20B		Flexible Coupling	537631
	2020.07-		Front;Rear	Hatchback 4WD B47D20B		Flexible Coupling	517955
630d Gran Turismo							
3.0 (155 kw)	2017.06-2020.06		Front;Rear	Hatchback RWD B57D30A		Flexible Coupling	517955
	2020.07-		Front;Rear	Hatchback RWD B57D30B	Bolt Hole Centres:105mm	Flexible Coupling	517955
	2020.07-		Front;Rear	Hatchback RWD B57D30B	Bolt Hole Centres:110mm	Flexible Coupling	537668
	2020.07-		Front;Rear	Hatchback RWD B57D30B		Flexible Coupling Kit	517955S
3.0 (195 kw)	2017.06-2020.06		Front;Rear	Hatchback RWD B57D30A		Flexible Coupling	517955
3.0 (210 kw)	2020.07-		Front;Rear	Hatchback RWD B57D30B	Bolt Hole Centres:105mm	Flexible Coupling	517955
	2020.07-		Front;Rear	Hatchback RWD B57D30B	Bolt Hole Centres:110mm	Flexible Coupling	537668
	2020.07-		Front;Rear	Hatchback RWD B57D30B		Flexible Coupling Kit	517955S

	YEAR	TRANSM.	FITTING POSITION	BODY STYLE & DRIVE TYPE & ENGINE	REMARKS	PRODUCT	GSP Ref.
BMW							
630d xDrive Gran Turismo							
3.0 (155 kw)	2017.06-2020.06		Centre	Hatchback 4WD B57D30A		Center Bearing Support	538640
	2017.06-2020.06		Front	Hatchback 4WD B57D30A		Flexible Coupling	537631
	2017.06-2020.06		Front;Rear	Hatchback 4WD B57D30A		Flexible Coupling	517955
3.0 (183 kw)	2017.06-2020.06		Centre	Hatchback 4WD B57D30A		Center Bearing Support	538640
	2017.06-2020.06		Front	Hatchback 4WD B57D30A		Flexible Coupling	537631
	2017.06-2020.06		Front;Rear	Hatchback 4WD B57D30A		Flexible Coupling	517955
3.0 (195 kw)	2017.06-2020.06		Centre	Hatchback 4WD B57D30A		Center Bearing Support	538640
	2017.06-2020.06		Front	Hatchback 4WD B57D30A		Flexible Coupling	537631
	2017.06-2020.06		Front;Rear	Hatchback 4WD B57D30A		Flexible Coupling	517955
3.0 (210 kw)	2020.07-		Front	Hatchback 4WD B57D30B		Flexible Coupling	537631
	2020.07-		Front;Rear	Hatchback 4WD B57D30B		Flexible Coupling	517955
630i Cabrio							
3.0 (190 kw)	2004.09-2007.08		Centre	Cabriolet RWD N52B30A/N52B30B/N52B30BF		Center Bearing Support	538647
	2004.09-2007.08		Centre	Cabriolet RWD N52B30A/N52B30B/N52B30BF		Center Bearing Support	538672
	2004.09-2007.08		Front	Cabriolet RWD N52B30A/N52B30B/N52B30BF	Width:30mm	Flexible Coupling	510596
	2004.09-2007.08		Front	Cabriolet RWD N52B30A/N52B30B/N52B30BF	Width:32mm	Flexible Coupling	533422
	2004.09-2007.08		Front	Cabriolet RWD N52B30A/N52B30B/N52B30BF		Flexible Coupling Kit	533422S
3.0 (200 kw)	2007.09-2010.08		Centre	Cabriolet RWD N52B30A/N52B30B/N52B30BF/N53B30A		Center Bearing Support	538647
	2007.09-2010.08		Centre	Cabriolet RWD N52B30A/N52B30B/N52B30BF/N53B30A		Center Bearing Support	538672
	2007.09-2010.08		Front	Cabriolet RWD N52B30A/N52B30B/N52B30BF/N53B30A	Width:30mm	Flexible Coupling	510596
	2007.09-2010.08		Front	Cabriolet RWD N52B30A/N52B30B/N52B30BF/N53B30A	Width:32mm	Flexible Coupling	533422
	2007.09-2010.08		Front	Cabriolet RWD N52B30A/N52B30B/N52B30BF/N53B30A		Flexible Coupling	533422
	2007.09-2010.08		Front	Cabriolet RWD N52B30A/N52B30B/N52B30BF/N53B30A		Flexible Coupling Kit	533422S
630i Coupe							
3.0 (190 kw)	2004.09-2007.08		Centre	Coupe RWD N52B30A/N52B30BF		Center Bearing Support	538647
	2004.09-2007.08		Centre	Coupe RWD N52B30A/N52B30BF		Center Bearing Support	538672
	2004.09-2007.08		Front	Coupe RWD N52B30A/N52B30BF	Width:30mm	Flexible Coupling	510596
	2004.09-2007.08		Front	Coupe RWD N52B30A/N52B30BF	Width:32mm	Flexible Coupling	533422
	2004.09-2007.08		Front	Coupe RWD N52B30A/N52B30BF		Flexible Coupling Kit	533422S
3.0 (200 kw)	2007.09-2010.08		Centre	Coupe RWD N52B30A/N52B30B/N52B30BF/N53B30A		Center Bearing Support	538647
	2007.09-2010.08		Centre	Coupe RWD N52B30A/N52B30B/N52B30BF/N53B30A		Center Bearing Support	538672
	2007.09-2010.08		Front	Coupe RWD N52B30A/N52B30B/N52B30BF/N53B30A	Width:30mm	Flexible Coupling	510596
	2007.09-2010.08		Front	Coupe RWD N52B30A/N52B30B/N52B30BF/N53B30A	Width:32mm	Flexible Coupling	533422
	2007.09-2010.08		Front	Coupe RWD N52B30A/N52B30B/N52B30BF/N53B30A		Flexible Coupling	533422
	2007.09-2010.08		Front	Coupe RWD N52B30A/N52B30B/N52B30BF/N53B30A		Flexible Coupling Kit	533422S
630i Gran Turismo							
2.0 (180 kw)	2020.07-		Front;Rear	Hatchback RWD B48B20B		Flexible Coupling	517955
2.0 (183 kw)	2017.06-2020.06		Centre	Hatchback RWD B48B20B		Center Bearing Support	538640
	2017.06-2020.06		Front	Hatchback RWD B48B20B	Width:30mm	Flexible Coupling	510596
	2017.06-2020.06		Front	Hatchback RWD B48B20B	Width:32mm	Flexible Coupling	533422
	2017.06-2020.06		Front;Rear	Hatchback RWD B48B20B		Flexible Coupling	517955
2.0 (190 kw)	2017.06-2020.06		Centre	Hatchback RWD B48B20B		Center Bearing Support	538640
	2017.06-2020.06		Front	Hatchback RWD B48B20B	Inner diameter:50mm,Width:30mm	Flexible Coupling	510596
	2017.06-2020.06		Front	Hatchback RWD B48B20B	Width:32mm	Flexible Coupling	533422
	2017.06-2020.06		Front	Hatchback RWD B48B20B	Width:29.5mm	Flexible Coupling	537625
	2017.06-2020.06		Front;Rear	Hatchback RWD B48B20B		Flexible Coupling	517955
	2017.06-2020.06		Front	Hatchback RWD B48B20B	Width:32mm	Flexible Coupling Kit	533422S
	2017.06-2020.06		Front	Hatchback RWD B48B20B	Width:30mm	Flexible Coupling Kit	537625S
	2020.07-		Front;Rear	Hatchback RWD B48B20B		Flexible Coupling	517955
630i xDrive Gran Turismo							
3.0 (190 kw)	2019.07-		Centre	Hatchback 4WD B58B30C		Center Bearing Support	538640
	2019.07-		Front	Hatchback 4WD B58B30C		Flexible Coupling	537631
	2019.07-		Front;Rear	Hatchback 4WD B58B30C		Flexible Coupling	517955
635d Cabrio							
3.0 (210 kw)	2007.03-2010.05		Centre	Cabriolet RWD M57D306D5		Center Bearing Support	538663
	2007.03-2010.05		Front	Cabriolet RWD M57D306D5	530160 and 530758 different structure	Flexible Coupling	530160
	2007.03-2010.05		Front	Cabriolet RWD M57D306D5	530758 and 530160 different structure	Flexible Coupling	530758
	2007.03-2010.05		Front	Cabriolet RWD M57D306D5		Flexible Coupling Kit	530758S
635d Coupe							
3.0 (210 kw)	2007.03-2010.05		Centre	Coupe RWD M57D306D5		Center Bearing Support	538663
	2007.03-2010.05		Front	Coupe RWD M57D306D5	530160 and 530758 different structure	Flexible Coupling	530160
	2007.03-2010.05		Front	Coupe RWD M57D306D5	530758 and 530160 different structure	Flexible Coupling	530758
	2007.03-2010.05		Front	Coupe RWD M57D306D5		Flexible Coupling Kit	530758S

	YEAR	TRANSM.	FITTING POSITION	BODY STYLE & DRIVE TYPE & ENGINE	REMARKS	PRODUCT	GSP Ref.
BMW							
640d Cabrio							
3.0 (230 kw)	2011.09-2018.06		Centre	Cabriolet RWD N57D30B		Center Bearing Support	539905
	2011.09-2018.06		Front;Rear	Cabriolet RWD N57D30B		Flexible Coupling	537668
	2011.09-2018.06		Front	Cabriolet RWD N57D30B		Flexible Coupling Kit	537668S
	2011.09-2018.06		Rear	Cabriolet RWD N57D30B		Flexible Coupling Kit	517957S
640d Coupe							
3.0 (230 kw)	2011.09-2017.10		Front;Rear	Coupe RWD N57D30B		Flexible Coupling	537668
	2011.09-2017.10		Front	Coupe RWD N57D30B		Flexible Coupling Kit	537668S
	2011.09-2017.10		Rear	Coupe RWD N57D30B		Flexible Coupling Kit	517957S
640d Gran Coupe							
3.0 (230 kw)	2012.03-2018.10	8AT	Rear	Coupe RWD N57D30B	Date to:2018.06	Propshaft	PS901894
	2012.03-2018.10		Front;Rear	Coupe RWD N57D30B		Flexible Coupling	537668
	2012.03-2018.10		Front	Coupe RWD N57D30B		Flexible Coupling Kit	537668S
	2012.03-2018.10		Rear	Coupe RWD N57D30B		Flexible Coupling Kit	517957S
640d xDrive Cabrio							
3.0 (230 kw)	2012.03-2018.06	AT	Front	Cabriolet 4WD N57D30B		Propshaft	PS900138
	2012.03-2018.06		Front;Rear	Cabriolet 4WD N57D30B		Flexible Coupling	517955
	2012.03-2018.06		Front	Cabriolet 4WD N57D30B		Flexible Coupling Kit	537669S
	2012.03-2018.06		Front;Rear	Cabriolet 4WD N57D30B		Flexible Coupling Kit	517955S
640d xDrive Coupe							
3.0 (230 kw)	2012.03-2017.10	AT	Front	Coupe 4WD N57D30B		Propshaft	PS900138
	2012.03-2017.10		Front;Rear	Coupe 4WD N57D30B		Flexible Coupling	517955
	2012.03-2017.10		Front	Coupe 4WD N57D30B		Flexible Coupling Kit	537669S
	2012.03-2017.10		Front;Rear	Coupe 4WD N57D30B		Flexible Coupling Kit	517955S
640d xDrive Gran Coupe							
3.0 (230 kw)	2013.03-2018.10	AT	Front	Coupe 4WD N57D30B		Propshaft	PS900138
	2013.03-2018.10		Front;Rear	Coupe 4WD N57D30B		Flexible Coupling	517955
	2013.03-2018.10		Front	Coupe 4WD N57D30B		Flexible Coupling Kit	537669S
	2013.03-2018.10		Front;Rear	Coupe 4WD N57D30B		Flexible Coupling Kit	517955S
640d xDrive Gran Turismo							
3.0 (235 kw)	2017.11-2020.06		Front;Rear	Hatchback 4WD B57D30B		Flexible Coupling	517955
640i Cabrio							
3.0 (235 kw)	2011.09-2018.06	AT	Rear	Cabriolet RWD N55B30A	for OE No.:26107614685	Propshaft	PS900141
	2011.09-2018.06	AT	Rear	Cabriolet RWD N55B30A	Date to:2017.02;for OE No.:26107632630	Propshaft	PS901384
	2011.09-2018.06		Centre	Cabriolet RWD N55B30A		Center Bearing Support	538655
	2011.09-2018.06		Front;Rear	Cabriolet RWD N55B30A		Flexible Coupling	517955
	2011.09-2018.06		Front;Rear	Cabriolet RWD N55B30A		Flexible Coupling Kit	517955S
640i Coupe							
3.0 (235 kw)	2011.07-2017.10		Centre	Coupe RWD N55B30A		Center Bearing Support	538655
	2011.07-2017.10		Front;Rear	Coupe RWD N55B30A		Flexible Coupling	517955
	2011.07-2017.10		Front;Rear	Coupe RWD N55B30A		Flexible Coupling Kit	517955S
640i Gran Coupe							
3.0 (235 kw)	2012.03-2018.10	AT	Rear	Coupe RWD N55B30A		Propshaft	PS901384
	2012.03-2018.10		Front;Rear	Coupe RWD N55B30A		Flexible Coupling	517955
	2012.03-2018.10		Front;Rear	Coupe RWD N55B30A		Flexible Coupling Kit	517955S
640i Gran Turismo							
3.0 (245 kw)	2020.07-		Front;Rear	Hatchback RWD B58B30C		Flexible Coupling	517955
	2020.07-		Front;Rear	Hatchback RWD B58B30C		Flexible Coupling Kit	517955S
3.0 (250 kw)	2017.06-2020.06		Front;Rear	Hatchback RWD B58B30A/B58B30C		Flexible Coupling	517955
	2017.06-2020.06		Front;Rear	Hatchback RWD B58B30A/B58B30C		Flexible Coupling Kit	517955S
3.0 (265 kw)	2017.06-2020.06		Front;Rear	Hatchback RWD B58B30A/B58B30C		Flexible Coupling	517955
	2017.06-2020.06		Front;Rear	Hatchback RWD B58B30A/B58B30C		Flexible Coupling Kit	517955S
640i xDrive Cabrio							
3.0 (235 kw)	2013.03-2018.06	AT	Front	Cabriolet 4WD N55B30A		Propshaft	PS900138
	2013.03-2018.06		Centre	Cabriolet 4WD N55B30A		Center Bearing Support	539061
	2013.03-2018.06		Front;Rear	Cabriolet 4WD N55B30A		Flexible Coupling	517955
	2013.03-2018.06		Front	Cabriolet 4WD N55B30A		Flexible Coupling Kit	537669S
	2013.03-2018.06		Front;Rear	Cabriolet 4WD N55B30A		Flexible Coupling Kit	517955S
640i xDrive Coupe							
3.0 (235 kw)	2013.03-2017.10	AT	Front	Coupe 4WD N55B30A		Propshaft	PS900138
	2013.03-2017.10		Centre	Coupe 4WD N55B30A		Center Bearing Support	539061
	2013.03-2017.10		Front;Rear	Coupe 4WD N55B30A		Flexible Coupling	517955
	2013.03-2017.10		Front	Coupe 4WD N55B30A		Flexible Coupling Kit	537669S
	2013.03-2017.10		Front;Rear	Coupe 4WD N55B30A		Flexible Coupling Kit	517955S

	YEAR	TRANSM.	FITTING POSITION	BODY STYLE & DRIVE TYPE & ENGINE	REMARKS	PRODUCT	GSP Ref.
BMW							
640i xDrive Gran Coupe							
3.0 (235 kw)	2013.03-2018.10	AT	Front	Coupe 4WD N55B30A		Propshaft	PS900138
	2013.03-2018.10		Centre	Coupe 4WD N55B30A		Center Bearing Support	539061
	2013.03-2018.10		Front;Rear	Coupe 4WD N55B30A		Flexible Coupling	517955
	2013.03-2018.10		Front	Coupe 4WD N55B30A		Flexible Coupling Kit	537669S
	2013.03-2018.10		Front;Rear	Coupe 4WD N55B30A		Flexible Coupling Kit	517955S
640i xDrive Gran Turismo							
3.0 (245 kw)	2020.07-		Centre	Hatchback 4WD B58B30C		Center Bearing Support	538640
	2020.07-		Front	Hatchback 4WD B58B30C		Flexible Coupling	537631
	2020.07-		Front;Rear	Hatchback 4WD B58B30C		Flexible Coupling	517955
3.0 (250 kw)	2017.06-2020.06		Centre	Hatchback 4WD B58B30A/B58B30C		Center Bearing Support	538640
	2017.06-2020.06		Front	Hatchback 4WD B58B30A/B58B30C		Flexible Coupling	537631
	2017.06-2020.06		Front;Rear	Hatchback 4WD B58B30A/B58B30C		Flexible Coupling	517955
3.0 (265 kw)	2017.06-2020.06		Centre	Hatchback 4WD B58B30A/B58B30C		Center Bearing Support	538640
	2017.06-2020.06		Front	Hatchback 4WD B58B30A/B58B30C		Flexible Coupling	537631
	2017.06-2020.06		Front;Rear	Hatchback 4WD B58B30A/B58B30C		Flexible Coupling	517955
645i Cabrio							
4.4 (245 kw)	2004.03-2005.07	AT	Rear	Cabriolet RWD N62B44A		Propshaft	PS900140
	2004.03-2005.07		Centre	Cabriolet RWD N62B44A		Center Bearing Support	538663
	2004.03-2005.07		Front	Cabriolet RWD N62B44A	Inner diameter:57.5mm	Flexible Coupling	517956
	2004.03-2005.07		Front	Cabriolet RWD N62B44A	Inner diameter:44mm	Flexible Coupling	530160
	2004.03-2005.07		Front	Cabriolet RWD N62B44A	Inner diameter:43.5mm	Flexible Coupling	530758
	2004.03-2005.07		Front	Cabriolet RWD N62B44A	Inner diameter:55mm	Flexible Coupling	537669
	2004.03-2005.07		Front;Rear	Cabriolet RWD N62B44A		Flexible Coupling	517955
	2004.03-2005.07		Front	Cabriolet RWD N62B44A	AT	Flexible Coupling Kit	537668S
	2004.03-2005.07		Front	Cabriolet RWD N62B44A	MT	Flexible Coupling Kit	537669S
645i Coupe							
4.4 (245 kw)	2003.09-2005.08	AT	Rear	Coupe RWD N62B44A		Propshaft	PS900140
	2003.09-2005.08		Centre	Coupe RWD N62B44A		Center Bearing Support	538663
	2003.09-2005.08		Front	Coupe RWD N62B44A	Inner diameter:57.5mm	Flexible Coupling	517956
	2003.09-2005.08		Front	Coupe RWD N62B44A	Inner diameter:44mm	Flexible Coupling	530160
	2003.09-2005.08		Front	Coupe RWD N62B44A	Inner diameter:43.5mm	Flexible Coupling	530758
	2003.09-2005.08		Front	Coupe RWD N62B44A	Inner diameter:55mm	Flexible Coupling	537669
	2003.09-2005.08		Front;Rear	Coupe RWD N62B44A	MT	Flexible Coupling	517955
	2003.09-2005.08		Front;Rear	Coupe RWD N62B44A	AT;AMT	Flexible Coupling	537668
	2003.09-2005.08		Front	Coupe RWD N62B44A	AT	Flexible Coupling Kit	537668S
	2003.09-2005.08		Front	Coupe RWD N62B44A	MT	Flexible Coupling Kit	537669S
	2003.09-2005.08		Rear	Coupe RWD N62B44A	AT	Flexible Coupling Kit	517957S
650i Cabrio							
4.4 (298 kw)	2012.01-2012.12		Front;Rear	Cabriolet RWD N63B44A		Flexible Coupling	537668
4.4 (300 kw)	2010.12-2012.06		Centre	Cabriolet RWD N63B44A		Center Bearing Support	539905
	2010.12-2012.06		Front;Rear	Cabriolet RWD N63B44A		Flexible Coupling	537668
	2010.12-2012.06		Front	Cabriolet RWD N63B44A		Flexible Coupling Kit	537668S
	2010.12-2012.06		Rear	Cabriolet RWD N63B44A		Flexible Coupling Kit	517957S
4.4 (330 kw)	2012.07-2018.06		Front;Rear	Cabriolet RWD N63B44B		Flexible Coupling	537668
	2012.07-2018.06		Front	Cabriolet RWD N63B44B		Flexible Coupling Kit	537668S
	2012.07-2018.06		Rear	Cabriolet RWD N63B44B		Flexible Coupling Kit	517957S
4.8 (270 kw)	2005.09-2010.08		Centre	Cabriolet RWD N62B48B		Center Bearing Support	538663
	2005.09-2010.08		Front	Cabriolet RWD N62B48B	530160 and 530758 different structure	Flexible Coupling	530160
	2005.09-2010.08		Front	Cabriolet RWD N62B48B	530758 and 530160 different structure	Flexible Coupling	530758
	2005.09-2010.08		Front;Rear	Cabriolet RWD N62B48B		Flexible Coupling	517955
	2005.09-2010.08		Front	Cabriolet RWD N62B48B		Flexible Coupling Kit	530758S
	2005.09-2010.08		Front;Rear	Cabriolet RWD N62B48B		Flexible Coupling Kit	517955S
650i Coupe							
4.4 (298 kw)	2012.01-2012.12		Front;Rear	Coupe RWD N63B44A		Flexible Coupling	537668
4.4 (300 kw)	2011.07-2012.06		Centre	Coupe RWD N63B44A		Center Bearing Support	539905
	2011.07-2012.06		Front;Rear	Coupe RWD N63B44A		Flexible Coupling	537668
	2011.07-2012.06		Front	Coupe RWD N63B44A		Flexible Coupling Kit	537668S
	2011.07-2012.06		Rear	Coupe RWD N63B44A		Flexible Coupling Kit	517957S
4.4 (330 kw)	2012.07-2017.10		Front;Rear	Coupe RWD N63B44B		Flexible Coupling	537668
	2012.07-2017.10		Front	Coupe RWD N63B44B		Flexible Coupling Kit	537668S
	2012.07-2017.10		Rear	Coupe RWD N63B44B		Flexible Coupling Kit	517957S
4.8 (270 kw)	2005.09-2010.08		Centre	Coupe RWD N62B48B		Center Bearing Support	538663
	2005.09-2010.08		Front	Coupe RWD N62B48B	Inner diameter:44mm,530160 and 530758 different structure	Flexible Coupling	530160
	2005.09-2010.08		Front	Coupe RWD N62B48B	Inner diameter:43.5mm,530758 and 530160 different structure	Flexible Coupling	530758

	YEAR	TRANSM.	FITTING POSITION	BODY STYLE & DRIVE TYPE & ENGINE	REMARKS	PRODUCT	GSP Ref.
BMW							
650i Coupe							
4.8 (270 kw)	2005.09-2010.08		Front	Coupe RWD N62B48B	Inner diameter:55mm	Flexible Coupling	537669
	2005.09-2010.08		Front;Rear	Coupe RWD N62B48B		Flexible Coupling	517955
	2005.09-2010.08		Front	Coupe RWD N62B48B		Flexible Coupling Kit	530758S
	2005.09-2010.08		Front;Rear	Coupe RWD N62B48B		Flexible Coupling Kit	517955S
650i Gran Coupe							
4.4 (330 kw)	2012.07-2018.10		Front;Rear	Coupe RWD N63B44B		Flexible Coupling	537668
	2012.07-2018.10		Front	Coupe RWD N63B44B		Flexible Coupling Kit	537668S
	2012.07-2018.10		Rear	Coupe RWD N63B44B		Flexible Coupling Kit	517957S
650i xDrive Cabrio							
4.0 (300 kw)	2012.07-2018.06	AT	Front	Convertible 4WD N63 B40 A		Propshaft	PS900138
4.4 (300 kw)	2011.09-2012.06	AT	Front	Cabriolet 4WD N63B44A		Propshaft	PS900138
	2011.09-2012.06		Centre	Cabriolet 4WD N63B44A		Center Bearing Support	539905
	2011.09-2012.06		Front;Rear	Cabriolet 4WD N63B44A		Flexible Coupling	517955
	2011.09-2012.06		Front	Cabriolet 4WD N63B44A		Flexible Coupling Kit	537669S
	2011.09-2012.06		Front;Rear	Cabriolet 4WD N63B44A		Flexible Coupling Kit	517955S
4.4 (330 kw)	2012.07-2018.06	AT	Front	Cabriolet 4WD N63B44B		Propshaft	PS900138
	2012.07-2018.06		Front;Rear	Cabriolet 4WD N63B44B		Flexible Coupling	517955
	2012.07-2018.06		Front	Cabriolet 4WD N63B44B		Flexible Coupling Kit	537669S
	2012.07-2018.06		Front;Rear	Cabriolet 4WD N63B44B		Flexible Coupling Kit	517955S
650i xDrive Coupe							
4.0 (300 kw)	2012.07-2017.10	AT	Front	Coupe 4WD N63 B40 A		Propshaft	PS900138
4.4 (300 kw)	2011.09-2015.02	AT	Front	Coupe 4WD N63B44A		Propshaft	PS900138
	2011.09-2015.02		Front;Rear	Coupe 4WD N63B44A		Flexible Coupling	517955
	2011.09-2015.02		Front	Coupe 4WD N63B44A		Flexible Coupling Kit	537669S
	2011.09-2015.02		Front;Rear	Coupe 4WD N63B44A		Flexible Coupling Kit	517955S
4.4 (330 kw)	2012.07-2017.10	AT	Front	Coupe 4WD N63B44B		Propshaft	PS900138
	2012.07-2017.10		Front;Rear	Coupe 4WD N63B44B		Flexible Coupling	517955
	2012.07-2017.10		Front	Coupe 4WD N63B44B		Flexible Coupling Kit	537669S
	2012.07-2017.10		Front;Rear	Coupe 4WD N63B44B		Flexible Coupling Kit	517955S
650i xDrive Gran Coupe							
4.0 (300 kw)	2013.05-2018.10	AT	Front	Coupe 4WD N63 B40 A		Propshaft	PS900138
4.4 (330 kw)	2012.07-2018.10	AT	Front	Coupe 4WD N63B44B		Propshaft	PS900138
	2012.07-2018.10		Front;Rear	Coupe 4WD N63B44B		Flexible Coupling	517955
	2012.07-2018.10		Front	Coupe 4WD N63B44B		Flexible Coupling Kit	537669S
	2012.07-2018.10		Front;Rear	Coupe 4WD N63B44B		Flexible Coupling Kit	517955S
7 ActiveHybrid							
3.0 (260 kw)	2012.08-2015.06		Front;Rear	Saloon RWD N55B30A		Flexible Coupling	517955
	2012.08-2015.06		Front	Saloon RWD N55B30A		Flexible Coupling Kit	537669S
	2012.08-2015.06		Front;Rear	Saloon RWD N55B30A		Flexible Coupling Kit	517955S
4.4 (342 kw)	2010.04-2012.06		Front	Saloon RWD N63B44A		Flexible Coupling Kit	537669S
	2010.04-2012.06		Front;Rear	Saloon RWD N63B44A		Flexible Coupling Kit	517955S
725d							
2.0 (155 kw)	2017.07-2019.02		Front;Rear	Saloon RWD B47D20B		Flexible Coupling	517955
2.0 (170 kw)	2015.06-2019.02		Front;Rear	Saloon RWD B47D20B		Flexible Coupling	517955
2.5 (105 kw)	1996.02-2000.05	AT/MT	Rear	Saloon RWD M51D256T1		Joint,propshaft	605057
	1996.02-2000.05		Front	Saloon RWD M51D256T1	Inner diameter:50mm	Flexible Coupling	537625
	1996.02-2000.05		Front	Saloon RWD M51D256T1	Inner diameter:48.5mm	Flexible Coupling	537631
	1996.02-2000.05		Front	Saloon RWD M51D256T1		Flexible Coupling Kit	537631S
728i							
2.8 (142 kw)	1995.11-2001.09	AT/MT	Rear	Saloon RWD M52B286S1/M52B286S2		Joint,propshaft	605057
	1995.11-2001.09		Front	Saloon RWD M52B286S1/M52B286S2		Flexible Coupling	510596
730d							
3.0 (135 kw)	1998.05-1999.08		Centre	Saloon RWD M57D306D1	Inner diameter:30mm	Center Bearing Support	538661
	1998.05-1999.08		Centre	Saloon RWD M57D306D1	Inner diameter:35mm	Center Bearing Support	538671
	1998.05-1999.08		Front	Saloon RWD M57D306D1		Flexible Coupling	530160
	1998.05-1999.08		Front	Saloon RWD M57D306D1		Flexible Coupling Kit	530160S
3.0 (142 kw)	1999.09-2002.05		Centre	Saloon RWD M57D306D1	Inner diameter:30mm	Center Bearing Support	538661
	1999.09-2002.05		Centre	Saloon RWD M57D306D1	Inner diameter:35mm	Center Bearing Support	538671
	1999.09-2002.05		Front	Saloon RWD M57D306D1		Flexible Coupling	530160
	1999.09-2002.05		Front	Saloon RWD M57D306D1		Flexible Coupling Kit	530160S
3.0 (155 kw)	2003.09-2008.08		Front	Saloon RWD M57D306D3		Flexible Coupling	530160
	2003.09-2008.08		Front	Saloon RWD M57D306D3		Flexible Coupling Kit	530160S
	2009.07-2015.08	AT	Rear	Saloon RWD N57D30A	Model year to:2012	Propshaft	PS901485
	2009.07-2015.08		Front;Rear	Saloon RWD N57D30A		Flexible Coupling	517955

	YEAR	TRANSM.	FITTING POSITION	BODY STYLE & DRIVE TYPE & ENGINE	REMARKS	PRODUCT	GSP Ref.
BMW							
730d							
3.0 (155 kw)	2009.07-2015.08		Front	Saloon RWD N57D30A		Flexible Coupling Kit	537669S
	2009.07-2015.08		Front;Rear	Saloon RWD N57D30A		Flexible Coupling Kit	517955S
	2015.09-2020.06		Front;Rear	Saloon RWD B57D30A		Flexible Coupling	517955
	2015.09-2020.06		Front;Rear	Saloon RWD B57D30A		Flexible Coupling Kit	517955S
3.0 (160 kw)	2002.06-2005.02		Front	Saloon RWD M57D306D2		Flexible Coupling	530160
	2002.06-2005.02		Front	Saloon RWD M57D306D2		Flexible Coupling Kit	530160S
3.0 (170 kw)	2005.06-2008.08		Front	Saloon RWD M57D306D3		Flexible Coupling	530160
	2005.06-2008.08		Front	Saloon RWD M57D306D3	AT	Flexible Coupling Kit	530160S
	2005.07-2008.08		Front	Saloon RWD M57D306D3		Flexible Coupling	530160
	2005.07-2008.08		Front	Saloon RWD M57D306D3	AT	Flexible Coupling Kit	530160S
3.0 (180 kw)	2008.09-2012.06	AT	Rear	Saloon RWD N57D30A		Propshaft	PS901485
	2008.09-2012.06		Centre	Saloon RWD N57D30A	for vehicles without trailer hitch,not for hot climate zones	Center Bearing Support	538655
	2008.09-2012.06		Centre	Saloon RWD N57D30A	for vehicles with trailer hitch,for hot climate zones	Center Bearing Support	539905
	2008.09-2012.06		Front;Rear	Saloon RWD N57D30A		Flexible Coupling	517955
	2008.09-2012.06		Front	Saloon RWD N57D30A		Flexible Coupling Kit	537669S
	2008.09-2012.06		Front;Rear	Saloon RWD N57D30A		Flexible Coupling Kit	517955S
3.0 (190 kw)	2012.07-2015.08		Front;Rear	Saloon RWD N57D30A		Flexible Coupling	517955
	2012.07-2015.08		Front	Saloon RWD N57D30A		Flexible Coupling Kit	537669S
	2012.07-2015.08		Front;Rear	Saloon RWD N57D30A		Flexible Coupling Kit	517955S
3.0 (195 kw)	2015.09-2020.06		Front;Rear	Saloon RWD B57D30A		Flexible Coupling	517955
	2015.09-2020.06		Front;Rear	Saloon RWD B57D30A		Flexible Coupling Kit	517955S
730d xDrive							
3.0 (155 kw)	2013.06-2015.05	AT	Front	Saloon 4WD N57D30A		Propshaft	PS900138
	2013.06-2015.05		Front;Rear	Saloon 4WD N57D30A		Flexible Coupling	517955
	2015.09-2020.06		Front	Saloon 4WD B57D30A		Flexible Coupling	510596
	2015.09-2020.06		Front;Rear	Saloon 4WD B57D30A		Flexible Coupling	517955
3.0 (183 kw)	2015.09-2020.06		Front	Saloon 4WD B57D30A		Flexible Coupling	510596
	2015.09-2020.06		Front;Rear	Saloon 4WD B57D30A		Flexible Coupling	517955
3.0 (190 kw)	2012.07-2015.08	AT	Front	Saloon 4WD N57D30A		Propshaft	PS900138
	2012.07-2015.08		Front;Rear	Saloon 4WD N57D30A		Flexible Coupling	517955
3.0 (195 kw)	2015.09-2020.06		Front	Saloon 4WD B57D30A		Flexible Coupling	510596
	2015.09-2020.06		Front;Rear	Saloon 4WD B57D30A		Flexible Coupling	517955
730i							
2.0 (190 kw)	2015.11-2019.02	AT	Rear	Saloon RWD B48B20B		Propshaft	PS901506
	2015.11-2019.02		Centre	Saloon RWD B48B20B		Center Bearing Support	538640
	2015.11-2019.02		Front	Saloon RWD B48B20B	Width:32mm	Flexible Coupling	533422
	2015.11-2019.02		Front	Saloon RWD B48B20B	Width:30mm	Flexible Coupling	537625
	2015.11-2019.02		Front	Saloon RWD B48B20B	Width:32mm	Flexible Coupling Kit	533422S
	2015.11-2019.02		Front	Saloon RWD B48B20B	Width:30mm	Flexible Coupling Kit	537625S
2.0 (195 kw)	2019.03-2022.06	AT	Rear	Saloon RWD B48B20B		Propshaft	PS901506
3.0 (155 kw)	1994.10-2001.11		Front	Saloon RWD M60B308S1	Inner diameter:50mm,510596 and 537625 different structure	Flexible Coupling	510596
	1994.10-2001.11		Front	Saloon RWD M60B308S1	Inner diameter:50mm,537625 and 510596 different structure	Flexible Coupling	537625
	1994.10-2001.11		Front	Saloon RWD M60B308S1	Inner diameter:48.5mm	Flexible Coupling	537631
	1994.10-2001.11		Front	Saloon RWD M60B308S1		Flexible Coupling Kit	537631S
3.0 (160 kw)	1994.03-1996.02		Front	Saloon RWD M60B308S1	Inner diameter:50mm,510596 and 537625 different structure	Flexible Coupling	510596
	1994.03-1996.02		Front	Saloon RWD M60B308S1	Inner diameter:50mm,537625 and 510596 different structure	Flexible Coupling	537625
	1994.03-1996.02		Front	Saloon RWD M60B308S1	Inner diameter:48.5mm	Flexible Coupling	537631
	1994.03-1996.02		Front	Saloon RWD M60B308S1		Flexible Coupling Kit	537631S
3.0 (170 kw)	2003.03-2005.02	6AT	Rear	Saloon RWD M54B306S3		Propshaft	PS901415
	2003.03-2005.02		Front	Saloon RWD M54B306S3		Flexible Coupling	530160
	2003.03-2005.02		Front	Saloon RWD M54B306S3		Flexible Coupling	530758
	2003.03-2005.02		Front	Saloon RWD M54B306S3	AT	Flexible Coupling Kit	530160S
3.0 (184 kw)	2005.03-2008.07	6AT	Rear	Saloon RWD N52 B30 A		Propshaft	PS901415
3.0 (190 kw)	2005.03-2008.08	6AT	Rear	Saloon RWD N52B30A/N52B30BF		Propshaft	PS901415
	2005.03-2008.08		Front	Saloon RWD N52B30A/N52B30BF	530160 and 530758 different structure	Flexible Coupling	530160
	2005.03-2008.08		Front	Saloon RWD N52B30A/N52B30BF	530758 and 530160 different structure	Flexible Coupling	530758
	2005.03-2008.08		Front	Saloon RWD N52B30A/N52B30BF		Flexible Coupling Kit	530758S
	2009.06-2015.06	AT	Rear	Saloon RWD N52B30A/N52B30AF/N52B30BF	For 730 LI,For Modelcode:F02,Date to:2011.09	Propshaft	PS900147
	2009.06-2015.06	AT	Rear	Saloon RWD N52B30A/N52B30AF/N52B30BF	For 730 I,For Modelcode:F01	Propshaft	PS901503
	2009.06-2015.06	AT	Rear	Saloon RWD N52B30A/N52B30AF/N52B30BF	For 730 LI,For Modelcode:F02,Date from:2011.10	Propshaft	PS901507
	2009.06-2015.06		Centre	Saloon RWD N52B30A/N52B30AF/N52B30BF		Center Bearing Support	538655
	2009.06-2015.06		Front;Rear	Saloon RWD N52B30A/N52B30AF/N52B30BF		Flexible Coupling	517955
	2009.06-2015.06		Front	Saloon RWD N52B30A/N52B30AF/N52B30BF		Flexible Coupling Kit	537669S
	2009.06-2015.06		Front;Rear	Saloon RWD N52B30A/N52B30AF/N52B30BF		Flexible Coupling Kit	517955S

	YEAR	TRANSM.	FITTING POSITION	BODY STYLE & DRIVE TYPE & ENGINE	REMARKS	PRODUCT	GSP Ref.
BMW							
730i							
3.0 (190 kw)	2009.09-2015.06	AT	Rear	Saloon RWD N52B30A/N52B30AF/N52B30BF	For 730 LI,For Modelcode:F02,Date to:2011.09	Propshaft	PS900147
	2009.09-2015.06	AT	Rear	Saloon RWD N52B30A/N52B30AF/N52B30BF	For 730 I,For Modelcode:F01	Propshaft	PS901503
	2009.09-2015.06	AT	Rear	Saloon RWD N52B30A/N52B30AF/N52B30BF	For 730 LI,For Modelcode:F02,Date from:2011.10	Propshaft	PS901507
	2009.09-2015.06		Centre	Saloon RWD N52B30A/N52B30AF/N52B30BF		Center Bearing Support	538655
	2009.09-2015.06		Front;Rear	Saloon RWD N52B30A/N52B30AF/N52B30BF		Flexible Coupling	517955
	2009.09-2015.06		Front	Saloon RWD N52B30A/N52B30AF/N52B30BF		Flexible Coupling Kit	537669S
	2009.09-2015.06		Front;Rear	Saloon RWD N52B30A/N52B30AF/N52B30BF		Flexible Coupling Kit	517955S
735i							
3.5 (173 kw)	1996.03-1998.08	AT/MT	Rear	Saloon RWD M62B358S1		Joint,propshaft	605057
	1996.03-1998.08		Centre	Saloon RWD M62B358S1	Inner diameter:30mm	Center Bearing Support	538661
	1996.03-1998.08		Centre	Saloon RWD M62B358S1	Inner diameter:35mm	Center Bearing Support	538671
	1996.03-1998.08		Front	Saloon RWD M62B358S1	Inner diameter:50mm,510596 and 537625 different structure	Flexible Coupling	510596
	1996.03-1998.08		Front	Saloon RWD M62B358S1	Inner diameter:50mm,537625 and 510596 different structure	Flexible Coupling	537625
	1996.03-1998.08		Front	Saloon RWD M62B358S1	Inner diameter:48.5mm	Flexible Coupling	537631
	1996.03-1998.08		Front	Saloon RWD M62B358S1		Flexible Coupling Kit	537631S
3.5 (175 kw)	1998.09-2001.07		Centre	Saloon RWD M62B358S2		Center Bearing Support	538671
	1998.09-2001.07		Front	Saloon RWD M62B358S2		Flexible Coupling	510596
3.6 (200 kw)	2001.10-2005.02	AT	Rear	Saloon RWD N62B36A	For 735 I,For Modelcode:E65,Date to:2002.10	Propshaft	PS900131
	2001.10-2005.02	AT	Rear	Saloon RWD N62B36A	For 735 LI,For Modelcode:E66,Date to:2002.11	Propshaft	PS900142
	2001.10-2005.02	AT	Rear	Saloon RWD N62B36A	For 735 LI,For Modelcode:E66,Date from:2002.12	Propshaft	PS900143
	2001.10-2005.02		Front	Saloon RWD N62B36A		Flexible Coupling	517956
	2001.10-2005.02		Front	Saloon RWD N62B36A		Flexible Coupling	530160
	2001.10-2005.02		Front	Saloon RWD N62B36A		Flexible Coupling Kit	530160S
	2002.06-2005.02	AT	Rear	Saloon RWD N62B36A	For 735 I,For Modelcode:E65,Date to:2002.10	Propshaft	PS900131
	2002.06-2005.02	AT	Rear	Saloon RWD N62B36A	For 735 LI,For Modelcode:E66,Date to:2002.11	Propshaft	PS900142
	2002.06-2005.02	AT	Rear	Saloon RWD N62B36A	For 735 LI,For Modelcode:E66,Date from:2002.12	Propshaft	PS900143
	2002.06-2005.02		Front	Saloon RWD N62B36A		Flexible Coupling	517956
	2002.06-2005.02		Front	Saloon RWD N62B36A		Flexible Coupling	530160
	2002.06-2005.02		Front	Saloon RWD N62B36A		Flexible Coupling Kit	530160S
4.0 (225 kw)	2005.03-2009.12	AT	Rear	Saloon RWD N62 B40 A		Propshaft	PS900144
740d							
3.0 (225 kw)	2009.09-2012.06		Centre	Saloon RWD N57D30B		Center Bearing Support	539905
	2009.09-2012.06		Front;Rear	Saloon RWD N57D30B	Bolt Hole Centres:105mm	Flexible Coupling	517955
	2009.09-2012.06		Front;Rear	Saloon RWD N57D30B	Bolt Hole Centres:110mm	Flexible Coupling	537668
	2009.09-2012.06		Front	Saloon RWD N57D30B		Flexible Coupling Kit	537668S
	2009.09-2012.06		Rear	Saloon RWD N57D30B		Flexible Coupling Kit	517957S
3.0 (230 kw)	2012.07-2015.08		Front;Rear	Saloon RWD N57D30B		Flexible Coupling	537668
	2012.07-2015.08		Front	Saloon RWD N57D30B		Flexible Coupling Kit	537668S
	2012.07-2015.08		Rear	Saloon RWD N57D30B		Flexible Coupling Kit	517957S
3.9 (180 kw)	1999.02-2002.05		Centre	Saloon RWD M67D398D1	Inner diameter:30mm	Center Bearing Support	538661
	1999.02-2002.05		Centre	Saloon RWD M67D398D1	Inner diameter:35mm	Center Bearing Support	538671
	1999.02-2002.05		Front	Saloon RWD M67D398D1		Flexible Coupling	530160
	1999.02-2002.05		Front	Saloon RWD M67D398D1		Flexible Coupling Kit	530160S
3.9 (190 kw)	2002.06-2005.02		Front	Saloon RWD M67D398D1		Flexible Coupling	537669
	2002.06-2005.02		Front;Rear	Saloon RWD M67D398D1		Flexible Coupling	517955
	2002.06-2005.02		Front	Saloon RWD M67D398D1		Flexible Coupling Kit	537669S
740d xDrive							
3.0 (220 kw)	2022.11-		Front	Saloon 4WD B57D30B		Flexible Coupling	510596
3.0 (225 kw)	2010.03-2012.06	AT	Front	Saloon 4WD N57D30B		Propshaft	PS900138
	2010.03-2012.06	AT	Rear	Saloon 4WD N57D30B	For Modelcode:F02	Propshaft	PS901505
	2010.03-2012.06		Front;Rear	Saloon 4WD N57D30B		Flexible Coupling	517955
	2010.03-2012.06		Front	Saloon 4WD N57D30B		Flexible Coupling Kit	537669S
	2010.03-2012.06		Front;Rear	Saloon 4WD N57D30B		Flexible Coupling Kit	517955S
3.0 (230 kw)	2012.07-2015.08	AT	Front	Saloon 4WD N57D30B		Propshaft	PS900138
	2012.07-2015.08	AT	Rear	Saloon 4WD N57D30B	For Modelcode:F02	Propshaft	PS901505
	2012.07-2015.08		Front;Rear	Saloon 4WD N57D30B		Flexible Coupling	517955
	2012.07-2015.08		Front	Saloon 4WD N57D30B		Flexible Coupling Kit	537669S
	2012.07-2015.08		Front;Rear	Saloon 4WD N57D30B		Flexible Coupling Kit	517955S
3.0 (235 kw)	2015.11-2020.06		Front;Rear	Saloon 4WD B57D30B		Flexible Coupling	517955
	2015.11-2020.06		Front;Rear	Saloon 4WD B57D30B		Flexible Coupling Kit	517955S
740e							
2.0 (240 kw)	2016.04-2019.02		Front;Rear	Saloon RWD B48B20B		Flexible Coupling	517955
	2016.04-2019.02		Front;Rear	Saloon RWD B48B20B		Flexible Coupling Kit	517955S

	YEAR	TRANSM.	FITTING POSITION	BODY STYLE & DRIVE TYPE & ENGINE	REMARKS	PRODUCT	GSP Ref.
BMW							
740e xDrive							
2.0 (240 kw)	2016.04-2019.02		Front	Saloon 4WD B48B20B		Flexible Coupling	510596
740i							
3.0 (224 kw)	2010.09-2015.12	6AT	Rear	Saloon RWD N54 B30 A	Model year to:2012	Propshaft	PS900147
3.0 (235 kw)	2010.09-2015.08	AT	Rear	Saloon RWD N55B30A		Propshaft	PS901503
	2010.09-2015.08		Front;Rear	Saloon RWD N55B30A		Flexible Coupling	517955
	2010.09-2015.08		Front	Saloon RWD N55B30A		Flexible Coupling Kit	537669S
	2010.09-2015.08		Front;Rear	Saloon RWD N55B30A		Flexible Coupling Kit	517955S
	2012.07-2015.08	AT	Rear	Saloon RWD N55B30A		Propshaft	PS901503
	2012.07-2015.08		Front;Rear	Saloon RWD N55B30A		Flexible Coupling	517955
	2012.07-2015.08		Front	Saloon RWD N55B30A		Flexible Coupling Kit	537669S
	2012.07-2015.08		Front;Rear	Saloon RWD N55B30A		Flexible Coupling Kit	517955S
3.0 (240 kw)	2008.09-2012.06	6AT	Rear	Saloon RWD N54B30A		Propshaft	PS900147
	2008.09-2012.06		Centre	Saloon RWD N54B30A		Center Bearing Support	538655
	2008.09-2012.06		Front;Rear	Saloon RWD N54B30A		Flexible Coupling	517955
	2008.09-2012.06		Front	Saloon RWD N54B30A		Flexible Coupling Kit	537669S
	2008.09-2012.06		Front;Rear	Saloon RWD N54B30A		Flexible Coupling Kit	517955S
	2015.09-2019.02		Front;Rear	Saloon RWD B58B30A		Flexible Coupling	517955
	2015.09-2019.02		Front;Rear	Saloon RWD B58B30A		Flexible Coupling Kit	517955S
4.0 (210 kw)	1994.03-1996.02		Centre	Saloon RWD M60B408S1	Inner diameter:30mm	Center Bearing Support	538661
	1994.03-1996.02		Centre	Saloon RWD M60B408S1	Inner diameter:35mm	Center Bearing Support	538671
	1994.03-1996.02		Front	Saloon RWD M60B408S1		Flexible Coupling	510663
4.0 (225 kw)	2005.03-2008.08	AT	Rear	Saloon RWD N62B40A	For Modelcode:E66	Propshaft	PS900143
	2005.03-2008.08		Front	Saloon RWD N62B40A	530160 and 530758 different structure	Flexible Coupling	530160
	2005.03-2008.08		Front	Saloon RWD N62B40A	530758 and 530160 different structure	Flexible Coupling	530758
	2005.03-2008.08		Front	Saloon RWD N62B40A		Flexible Coupling Kit	530758S
4.4 (210 kw)	1996.02-2001.07		Centre	Saloon RWD M62B448S1/M62B448S2	Inner diameter:30mm	Center Bearing Support	538661
	1996.02-2001.07		Centre	Saloon RWD M62B448S1/M62B448S2	Inner diameter:35mm	Center Bearing Support	538671
	1996.02-2001.07		Front	Saloon RWD M62B448S1/M62B448S2		Flexible Coupling	510663
740i xDrive							
3.0 (235 kw)	2012.07-2015.08	AT	Front	Saloon 4WD N55B30A		Propshaft	PS900138
	2012.07-2015.08		Front;Rear	Saloon 4WD N55B30A		Flexible Coupling	517955
3.0 (240 kw)	2016.03-2019.02		Front	Saloon 4WD B58B30A		Flexible Coupling	510596
	2016.03-2019.02		Front;Rear	Saloon 4WD B58B30A		Flexible Coupling	517955
745d							
4.4 (220 kw)	2005.03-2005.07		Front	Saloon RWD M67D448D1		Flexible Coupling	537669
	2005.03-2005.07		Front;Rear	Saloon RWD M67D448D1		Flexible Coupling	517955
	2005.03-2005.07		Front	Saloon RWD M67D448D1		Flexible Coupling Kit	537669S
4.4 (242 kw)	2005.08-2008.08		Front	Saloon RWD M67D448D1		Flexible Coupling	537669
	2005.08-2008.08		Front;Rear	Saloon RWD M67D448D1		Flexible Coupling	517955
	2005.08-2008.08		Front	Saloon RWD M67D448D1		Flexible Coupling Kit	537669S
745i							
4.4 (245 kw)	2001.07-2005.03	AT	Rear	Saloon RWD N62B44A	FOR 745 I,Date to:2002.11	Propshaft	PS900131
	2001.07-2005.03	AT	Rear	Saloon RWD N62B44A	FOR 745 I,Date from:2002.12	Propshaft	PS900144
	2001.07-2005.03		Front	Saloon RWD N62B44A		Flexible Coupling	517956
	2001.07-2005.03		Front	Saloon RWD N62B44A		Flexible Coupling	530160
	2001.07-2005.03		Front	Saloon RWD N62B44A		Flexible Coupling Kit	530160S
	2002.01-2005.03	AT	Rear	Saloon RWD N62B44A	FOR 745 LI,Date to:2002.11	Propshaft	PS900142
	2002.01-2005.03	AT	Rear	Saloon RWD N62B44A	FOR 745 LI,Date from:2002.12	Propshaft	PS900143
	2002.01-2005.03		Front	Saloon RWD N62B44A		Flexible Coupling	517956
	2002.01-2005.03		Front	Saloon RWD N62B44A		Flexible Coupling	530160
	2002.01-2005.03		Front	Saloon RWD N62B44A		Flexible Coupling Kit	530160S
750d xDrive							
3.0 (280 kw)	2012.07-2015.08	AT	Front	Saloon 4WD N57D30C		Propshaft	PS900138
	2012.07-2015.08	AT	Rear	Saloon 4WD N57D30C	For Modelcode:F01	Propshaft	PS901504
	2012.07-2015.08		Front;Rear	Saloon 4WD N57D30C		Flexible Coupling	517955
	2012.07-2015.08		Front;Rear	Saloon 4WD N57D30C		Flexible Coupling	537668
	2012.07-2015.08		Front	Saloon 4WD N57D30C		Flexible Coupling Kit	537668S
	2012.07-2015.08		Rear	Saloon 4WD N57D30C		Flexible Coupling Kit	517957S
3.0 (294 kw)	2016.07-2020.09		Front;Rear	Saloon 4WD B57D30C		Flexible Coupling	517955
	2016.07-2020.09		Front;Rear	Saloon 4WD B57D30C		Flexible Coupling Kit	517955S
	2016.07-2020.10		Front;Rear	Saloon 4WD B57D30C		Flexible Coupling	517955
	2016.07-2020.10		Front;Rear	Saloon 4WD B57D30C		Flexible Coupling Kit	517955S

	YEAR	TRANSM.	FITTING POSITION	BODY STYLE & DRIVE TYPE & ENGINE	REMARKS	PRODUCT	GSP Ref.
BMW							
750i							
4.0 (300 kw)	2013.07-2015.06	AT	Front	Saloon 4WD N63 B40 A		Propshaft	PS900138
	2013.07-2015.06	AT	Rear	Saloon 4WD N63 B40 A	For Modelcode:F02	Propshaft	PS901505
4.4 (300 kw)	2008.09-2012.06	8AT	Rear	Saloon RWD N63B44A	Model code:F01	Propshaft	PS901894
	2008.09-2012.06	AT	Rear	Saloon RWD N63B44A	Model code:F02,Date to:2011.09	Propshaft	PS901982
	2008.09-2012.06		Centre	Saloon RWD N63B44A		Center Bearing Support	539905
	2008.09-2012.06		Front;Rear	Saloon RWD N63B44A		Flexible Coupling	537668
	2008.09-2012.06		Front	Saloon RWD N63B44A		Flexible Coupling Kit	537668S
	2008.09-2012.06		Rear	Saloon RWD N63B44A		Flexible Coupling Kit	517957S
4.4 (330 kw)	2012.07-2015.06	8AT	Rear	Saloon RWD N63B44B		Propshaft	PS901894
	2012.07-2015.06		Front;Rear	Saloon RWD N63B44B		Flexible Coupling	537668
	2012.07-2015.06		Front	Saloon RWD N63B44B		Flexible Coupling Kit	537668S
	2012.07-2015.06		Rear	Saloon RWD N63B44B		Flexible Coupling Kit	517957S
4.4 (331 kw)	2012.09-2015.06		Front	Saloon RWD N63 B44 B		Flexible Coupling Kit	537668S
4.8 (270 kw)	2005.03-2008.08	AT	Rear	Saloon RWD N62B48B	For Modelcode:E66	Propshaft	PS900143
	2005.03-2008.08		Front	Saloon RWD N62B48B	530160 and 530758 different structure	Flexible Coupling	530160
	2005.03-2008.08		Front	Saloon RWD N62B48B	530758 and 530160 different structure	Flexible Coupling	530758
	2005.03-2008.08		Front	Saloon RWD N62B48B		Flexible Coupling Kit	530758S
5.4 (240 kw)	1994.11-2001.07		Centre	Saloon RWD M73B54121/M73B54122	Inner diameter:30mm	Center Bearing Support	538661
	1994.11-2001.07		Centre	Saloon RWD M73B54121/M73B54122	Inner diameter:35mm	Center Bearing Support	538671
	1994.11-2001.07		Front	Saloon RWD M73B54121/M73B54122		Flexible Coupling	510663
750i xDrive							
4.4 (300 kw)	2009.09-2012.06	AT	Front	Saloon 4WD N63B44A		Propshaft	PS900138
	2009.09-2012.06	AT	Rear	Saloon 4WD N63B44A	For Modelcode:F02	Propshaft	PS901505
	2009.09-2012.06		Centre	Saloon 4WD N63B44A		Center Bearing Support	539905
	2009.09-2012.06		Front;Rear	Saloon 4WD N63B44A		Flexible Coupling	517955
	2009.09-2012.06		Front	Saloon 4WD N63B44A		Flexible Coupling Kit	537669S
	2009.09-2012.06		Front;Rear	Saloon 4WD N63B44A		Flexible Coupling Kit	517955S
4.4 (330 kw)	2012.07-2015.06	AT	Front	Saloon 4WD N63B44B		Propshaft	PS900138
	2012.07-2015.06	AT	Rear	Saloon 4WD N63B44B	For Modelcode:F02	Propshaft	PS901505
	2012.07-2015.06		Front;Rear	Saloon 4WD N63B44B		Flexible Coupling	517955
	2012.07-2015.06		Front	Saloon 4WD N63B44B		Flexible Coupling Kit	537669S
	2012.07-2015.06		Front;Rear	Saloon 4WD N63B44B		Flexible Coupling Kit	517955S
	2015.09-2019.02		Front	Saloon 4WD N63B44C		Flexible Coupling	510596
760i							
6.0 (327 kw)	2003.01-2008.08	AT	Rear	Saloon RWD N73B60A/N73B60B	For Modelcode:E66	Propshaft	PS900145
	2003.01-2008.08		Front	Saloon RWD N73B60A/N73B60B		Flexible Coupling	537669
	2003.01-2008.08		Front;Rear	Saloon RWD N73B60A/N73B60B		Flexible Coupling	517955
	2003.01-2008.08		Front	Saloon RWD N73B60A/N73B60B		Flexible Coupling Kit	537669S
6.0 (400 kw)	2009.09-2015.08		Centre	Saloon RWD N74B60A		Center Bearing Support	538655
840d xDrive Cabrio							
3.0 (235 kw)	2018.07-2020.10		Front;Rear	Cabriolet 4WD B57D30B		Flexible Coupling	517955
840d xDrive Coupe							
3.0 (235 kw)	2018.07-2020.10		Front;Rear	Coupe 4WD B57D30B		Flexible Coupling	517955
840d xDrive Gran Coupe							
3.0 (235 kw)	2019.07-2020.10		Front;Rear	Coupe 4WD B57D30B		Flexible Coupling	517955
840i							
4.0 (210 kw)	1993.03-1996.02	MT	-	Coupe RWD M60B408S1		Joint,propshaft	635056
	1993.03-1996.02		Front	Coupe RWD M60B408S1		Flexible Coupling	510663
4.4 (210 kw)	1996.03-1999.06	MT	-	Coupe RWD M62B448S1		Joint,propshaft	635056
	1996.03-1999.06		Front	Coupe RWD M62B448S1		Flexible Coupling	510663
840i Cabrio							
3.0 (245 kw)	2020.11-		Front;Rear	Cabriolet RWD B58B30C		Flexible Coupling	517955
3.0 (250 kw)	2019.07-2020.10		Front;Rear	Cabriolet RWD B58B30C		Flexible Coupling	517955
840i Coupe							
3.0 (245 kw)	2020.11-		Front;Rear	Coupe RWD B58B30C		Flexible Coupling	517955
3.0 (250 kw)	2019.07-		Front;Rear	Coupe RWD B58B30C		Flexible Coupling	517955
840i Gran Coupe							
3.0 (245 kw)	2020.11-		Front;Rear	Coupe RWD B58B30C		Flexible Coupling	517955
3.0 (250 kw)	2019.07-		Front;Rear	Coupe RWD B58B30C		Flexible Coupling	517955
840i xDrive Gran Coupe							
3.0 (245 kw)	2020.11-		Front;Rear	Coupe 4WD B58B30C		Flexible Coupling	517955
3.0 (250 kw)	2019.07-2020.10		Front	Coupe 4WD B58B30C		Flexible Coupling	537631
	2019.07-2020.10		Front;Rear	Coupe 4WD B58B30C		Flexible Coupling	517955

	YEAR	TRANSM.	FITTING POSITION	BODY STYLE & DRIVE TYPE & ENGINE	REMARKS	PRODUCT	GSP Ref.
BMW							
850i							
5.4 (240 kw)	1995.11-1999.12	MT	-	Coupe RWD M73B54121		Joint,propshaft	635056
	1995.11-1999.12		Front	Coupe RWD M73B54121		Flexible Coupling	510663
5.6 (277 kw)	1993.09-1995.12	MT	-	Coupe RWD S70 B56 (56121)		Joint,propshaft	635056
5.6 (280 kw)	1993.04-1996.12	MT	-	Coupe RWD S70B56121		Joint,propshaft	635056
M Coupe							
3.0 (250 kw)	2011.03-2012.06		Centre	Coupe RWD N54B30A		Center Bearing Support	538664
	2011.03-2012.06		Front;Rear	Coupe RWD N54B30A		Flexible Coupling	517955
	2011.03-2012.06		Front	Coupe RWD N54B30A		Flexible Coupling Kit	537669S
	2011.03-2012.06		Front;Rear	Coupe RWD N54B30A		Flexible Coupling Kit	517955S
M135 xDrive							
2.0 (221 kw)	2024.07-		Centre	Hatchback 4WD B48A20H		Center Bearing Support	538640
	2024.07-		Front	Hatchback 4WD B48A20H		Flexible Coupling	510597
	2024.07-		Front	Hatchback 4WD B48A20H		Flexible Coupling Kit	510597S
M135i							
3.0 (235 kw)	2011.11-2016.06	AT	Rear	Hatchback RWD N55B30A	Model year to:2015	Propshaft	PS901440
	2011.11-2016.06		Centre	Hatchback RWD N55B30A		Center Bearing Support	538672
	2011.11-2016.06		Front;Rear	Hatchback RWD N55B30A		Flexible Coupling	517955
	2011.11-2016.06		Front;Rear	Hatchback RWD N55B30A		Flexible Coupling Kit	517955S
	2012.07-2015.02	AT	Rear	Hatchback RWD N55B30A		Propshaft	PS901440
	2012.07-2015.02		Centre	Hatchback RWD N55B30A		Center Bearing Support	538672
	2012.07-2015.02		Front;Rear	Hatchback RWD N55B30A		Flexible Coupling	517955
	2012.07-2015.02		Front;Rear	Hatchback RWD N55B30A		Flexible Coupling Kit	517955S
3.0 (240 kw)	2015.03-2016.06		Centre	Hatchback RWD N55B30A		Center Bearing Support	538672
	2015.03-2016.06		Front;Rear	Hatchback RWD N55B30A		Flexible Coupling	517955
	2015.03-2016.06		Front;Rear	Hatchback RWD N55B30A		Flexible Coupling Kit	517955S
M135i xDrive							
3.0 (235 kw)	2012.02-2016.06		Centre	Hatchback 4WD N55B30A		Center Bearing Support	538672
	2012.02-2016.06		Front	Hatchback 4WD N55B30A		Flexible Coupling	537631
	2012.02-2016.06		Front;Rear	Hatchback 4WD N55B30A		Flexible Coupling	517955
	2012.11-2015.02		Centre	Hatchback 4WD N55B30A		Center Bearing Support	538672
	2012.11-2015.02		Front	Hatchback 4WD N55B30A		Flexible Coupling	537631
	2012.11-2015.02		Front;Rear	Hatchback 4WD N55B30A		Flexible Coupling	517955
	2012.11-2015.02		Front;Rear	Hatchback 4WD N55B30A		Flexible Coupling Kit	517955S
3.0 (240 kw)	2015.03-2016.06		Centre	Hatchback 4WD N55B30A		Center Bearing Support	538672
	2015.03-2016.06		Front	Hatchback 4WD N55B30A		Flexible Coupling	537631
	2015.03-2016.06		Front;Rear	Hatchback 4WD N55B30A		Flexible Coupling	517955
	2015.03-2016.06		Front;Rear	Hatchback 4WD N55B30A		Flexible Coupling Kit	517955S
M140i							
3.0 (250 kw)	2015.10-2019.06		Centre	Hatchback RWD B58B30A		Center Bearing Support	538672
	2015.10-2019.06		Front;Rear	Hatchback RWD B58B30A		Flexible Coupling	517955
	2015.10-2019.06		Front;Rear	Hatchback RWD B58B30A		Flexible Coupling Kit	517955S
	2016.07-2019.06		Centre	Hatchback RWD B58B30A		Center Bearing Support	538672
	2016.07-2019.06		Front;Rear	Hatchback RWD B58B30A		Flexible Coupling	517955
	2016.07-2019.06		Front;Rear	Hatchback RWD B58B30A		Flexible Coupling Kit	517955S
M140i xDrive							
3.0 (250 kw)	2015.09-2019.06		Centre	Hatchback 4WD B58B30A		Center Bearing Support	538672
	2015.09-2019.06		Front;Rear	Hatchback 4WD B58B30A		Flexible Coupling	517955
	2015.09-2019.06		Front;Rear	Hatchback 4WD B58B30A		Flexible Coupling Kit	517955S
	2016.07-2019.06		Centre	Hatchback 4WD B58B30A		Center Bearing Support	538672
	2016.07-2019.06		Front;Rear	Hatchback 4WD B58B30A		Flexible Coupling	517955
	2016.07-2019.06		Front	Hatchback 4WD B58B30A		Flexible Coupling Kit	537669S
	2016.07-2019.06		Front;Rear	Hatchback 4WD B58B30A		Flexible Coupling Kit	517955S
M2 Coupe							
3.0 (272 kw)	2015.11-2018.06	AT	Rear	Coupe RWD N55B30A	For Modelcode:F87	Propshaft	PS901490
3.0 (302 kw)	2018.06-2021.06	AT	Rear	Coupe RWD S55B30A	For Modelcode:F87	Propshaft	PS901490
3.0 (331 kw)	2019.11-2021.06	AT	Rear	Coupe RWD S55B30A	For Modelcode:F87	Propshaft	PS901490
M235i Cabrio							
3.0 (240 kw)	2014.10-2016.06	AT	Rear	Cabriolet RWD N55B30A		Propshaft	PS901440
	2014.10-2016.06		Front;Rear	Cabriolet RWD N55B30A		Flexible Coupling	517955
	2014.10-2016.06		Front	Cabriolet RWD N55B30A		Flexible Coupling Kit	537669S
	2014.10-2016.06		Front;Rear	Cabriolet RWD N55B30A		Flexible Coupling Kit	517955S
M235i Coupe							
3.0 (235 kw)	2014.03-2016.06	AT	Rear	Coupe RWD N55 B30 A		Propshaft	PS901440
	2014.03-2016.06		Front;Rear	Coupe RWD N55 B30 A		Flexible Coupling Kit	517955S

	YEAR	TRANSM.	FITTING POSITION	BODY STYLE & DRIVE TYPE & ENGINE	REMARKS	PRODUCT	GSP Ref.
BMW							
M235i Coupe							
3.0 (240 kw)	2013.10-2016.06	AT	Rear	Coupe RWD N55B30A		Propshaft	PS901440
	2013.10-2016.06		Front;Rear	Coupe RWD N55B30A		Flexible Coupling	517955
	2013.10-2016.06		Front	Coupe RWD N55B30A		Flexible Coupling Kit	537669S
	2013.10-2016.06		Front;Rear	Coupe RWD N55B30A		Flexible Coupling Kit	517955S
M235i xDrive Cabrio							
3.0 (240 kw)	2015.07-2016.06		Centre	Cabriolet 4WD N55B30A		Center Bearing Support	538672
	2015.07-2016.06		Front	Cabriolet 4WD N55B30A		Flexible Coupling	510596
M235i xDrive Coupe							
3.0 (240 kw)	2014.07-2016.06		Centre	Coupe 4WD N55B30A		Center Bearing Support	538672
	2014.07-2016.06		Front	Coupe 4WD N55B30A		Flexible Coupling	510596
	2014.07-2016.06		Front;Rear	Coupe 4WD N55B30A		Flexible Coupling	517955
M235i xDrive Gran Coupe							
2.0 (225 kw)	2019.11-		Centre	Coupe 4WD B48A20E		Center Bearing Support	538640
M240i Cabrio							
3.0 (250 kw)	2015.09-2021.06		Front;Rear	Cabriolet RWD B58B30A		Flexible Coupling	517955
	2015.09-2021.06		Front;Rear	Cabriolet RWD B58B30A		Flexible Coupling Kit	517955S
M240i Coupe							
3.0 (250 kw)	2015.09-2021.06		Front;Rear	Coupe RWD B58B30A		Flexible Coupling	517955
	2015.09-2021.06		Front;Rear	Coupe RWD B58B30A		Flexible Coupling Kit	517955S
M240i xDrive Cabrio							
3.0 (250 kw)	2015.09-2020.10		Front;Rear	Cabriolet 4WD B58B30A		Flexible Coupling	517955
M240i xDrive Coupe							
3.0 (250 kw)	2015.09-2020.10		Front;Rear	Coupe 4WD B58B30A		Flexible Coupling	517955
3.0 (275 kw)	2021.08-		Front	Coupe 4WD B58B30B		Flexible Coupling	537631
M3							
3.0 (210 kw)	1994.10-1995.07		Front	Saloon RWD S50B306S1		Flexible Coupling	537625
3.0 (317 kw)	2014.03-2015.06		Centre	Saloon RWD S55B30A		Center Bearing Support	538664
3.0 (331 kw)	2016.03-2018.10		Centre	Saloon RWD S55B30A		Center Bearing Support	538664
3.0 (338 kw)	2018.01-2018.10		Centre	Saloon RWD S55B30A		Center Bearing Support	538664
3.2 (236 kw)	1995.10-1998.01		Front	Saloon RWD S50B326S1		Flexible Coupling	537625
4.0 (309 kw)	2007.12-2011.10	MT	Rear	Saloon RWD S65B40A		Propshaft	PS901496
	2007.12-2011.10		Centre	Saloon RWD S65B40A		Center Bearing Support	538672
	2007.12-2011.10		Front	Saloon RWD S65B40A		Flexible Coupling	538512
4.4 (331 kw)	2011.03-2011.12		Centre	Saloon RWD S65B44A		Center Bearing Support	538672
	2011.03-2011.12		Front	Saloon RWD S65B44A		Flexible Coupling	538512
M3 Cabrio							
3.2 (252 kw)	2001.03-2006.08		Centre	Cabriolet RWD S54B326S4		Center Bearing Support	538653
4.0 (309 kw)	2008.03-2013.10	MT	Rear	Cabriolet RWD S65B40A		Propshaft	PS901496
	2008.03-2013.10		Front	Cabriolet RWD S65B40A		Flexible Coupling	538512
M3 Coupe							
3.0 (210 kw)	1992.11-1995.07		Front	Coupe RWD S50B306S1		Flexible Coupling	537625
3.0 (217 kw)	1993.09-1995.05		Front	Coupe RWD S50B306S1		Flexible Coupling	537625
3.2 (236 kw)	1995.10-1998.11		Front	Coupe RWD S50B326S1		Flexible Coupling	537625
3.2 (252 kw)	2000.07-2006.05		Centre	Coupe RWD S54B326S4		Center Bearing Support	538653
3.2 (265 kw)	2003.05-2003.12		Centre	Coupe RWD S54B326S4		Center Bearing Support	538653
4.0 (309 kw)	2007.06-2013.06	MT	Rear	Coupe RWD S65B40A		Propshaft	PS901496
	2007.06-2013.06		Centre	Coupe RWD S65B40A		Center Bearing Support	538672
	2007.06-2013.06		Front	Coupe RWD S65B40A		Flexible Coupling	538512
4.4 (331 kw)	2007.03-		Centre	Coupe RWD S65B44A		Center Bearing Support	538672
	2007.03-		Front	Coupe RWD S65B44A		Flexible Coupling	538512
M340d xDrive							
3.0 (250 kw)	2020.04-		Front	Saloon 4WD B57D30B		Flexible Coupling	510596
M340d xDrive Touring							
3.0 (250 kw)	2020.04-		Front	Estate 4WD B57D30B		Flexible Coupling	510596
M340i xDrive							
3.0 (275 kw)	2019.07-		Centre	Saloon 4WD B58B30B		Center Bearing Support	538640
	2019.07-		Front	Saloon 4WD B58B30B		Flexible Coupling	537631
	2020.11-		Front	Saloon 4WD B58B30B		Flexible Coupling	510596
3.0 (285 kw)	2019.03-		Centre	Saloon 4WD B58B30B		Center Bearing Support	538640
	2019.03-		Front	Saloon 4WD B58B30B		Flexible Coupling	537631
M340i xDrive Touring							
3.0 (275 kw)	2019.11-		Centre	Estate 4WD B58B30B		Center Bearing Support	538640
	2019.11-		Front	Estate 4WD B58B30B		Flexible Coupling	537631
	2020.11-		Front	Estate 4WD B58B30B		Flexible Coupling	510596

	YEAR	TRANSM.	FITTING POSITION	BODY STYLE & DRIVE TYPE & ENGINE	REMARKS	PRODUCT	GSP Ref.
BMW							
M340i xDrive Touring							
3.0 (285 kw)	2019.11-		Front	Estate 4WD B58B30B		Flexible Coupling	510596
M4 Cabrio							
3.0 (317 kw)	2014.07-2020.08		Centre	Cabriolet RWD S55B30A		Center Bearing Support	538664
3.0 (331 kw)	2016.03-2020.08		Centre	Cabriolet RWD S55B30A		Center Bearing Support	538664
M4 Coupe							
3.0 (317 kw)	2014.01-2020.06		Centre	Coupe RWD S55B30A		Center Bearing Support	538664
3.0 (331 kw)	2016.03-2020.06		Centre	Coupe RWD S55B30A		Center Bearing Support	538664
3.0 (338 kw)	2017.07-2019.06		Centre	Coupe RWD S55B30A		Center Bearing Support	538664
M440d xDrive Cabrio							
3.0 (250 kw)	2021.11-		Front	Cabriolet 4WD B57D30B		Flexible Coupling	537631
M440d xDrive Coupe							
3.0 (250 kw)	2021.03-		Front	Coupe 4WD B57D30B		Flexible Coupling	537631
M440i Cabrio							
3.0 (275 kw)	2021.07-		Front;Rear	Cabriolet RWD B58B30B		Flexible Coupling	517955
	2021.07-		Front;Rear	Cabriolet RWD B58B30B		Flexible Coupling Kit	517955S
M440i xDrive Cabrio							
3.0 (275 kw)	2020.11-		Front	Cabriolet 4WD B58B30B		Flexible Coupling	537631
3.0 (285 kw)	2020.11-		Front	Cabriolet 4WD B58B30B		Flexible Coupling	537631
M440i xDrive Coupe							
3.0 (275 kw)	2020.11-		Front	Coupe 4WD B58B30B		Flexible Coupling	537631
3.0 (285 kw)	2020.07-		Front	Coupe 4WD B58B30B		Flexible Coupling	537631
M440i xDrive Gran Coupe							
3.0 (275 kw)	2021.07-		Centre	Coupe 4WD B58B30B		Center Bearing Support	538640
	2021.07-		Front	Coupe 4WD B58B30B		Flexible Coupling	510596
M5							
3.8 (250 kw)	1992.01-1995.07		Centre	Saloon RWD S38B386S1		Center Bearing Support	538677
4.4 (412 kw)	2011.09-2016.10	MT	Rear	Saloon RWD S63B44B		Propshaft	PS900137
4.9 (294 kw)	1998.10-2003.06	MT	-	Saloon RWD S62B508S1		Joint,propshaft	635056
5.0 (373 kw)	2004.09-2009.12		Front	Saloon RWD S85B50A		Flexible Coupling	538512
M5 Touring							
3.8 (250 kw)	1992.04-1995.07		Centre	Estate RWD S38B386S1		Center Bearing Support	538677
5.0 (373 kw)	2007.03-2010.04		Front	Estate RWD S85B50A		Flexible Coupling	538512
M550d xDrive							
3.0 (280 kw)	2012.03-2016.10	AT	Front	Saloon 4WD N57D30C		Propshaft	PS900138
	2012.03-2016.10		Front;Rear	Saloon 4WD N57D30C		Flexible Coupling	517955
	2012.03-2016.10		Front;Rear	Saloon 4WD N57D30C		Flexible Coupling	537668
	2012.03-2016.10		Front	Saloon 4WD N57D30C		Flexible Coupling Kit	537668S
	2012.03-2016.10		Rear	Saloon 4WD N57D30C		Flexible Coupling Kit	517957S
	2012.03-2016.10		Front;Rear	Saloon 4WD N57D30C		Flexible Coupling Kit	517955S
3.0 (294 kw)	2017.06-2020.06		Front;Rear	Saloon 4WD B57D30C		Flexible Coupling	517955
M550d xDrive Touring							
3.0 (280 kw)	2012.01-2017.02	AT	Front	Estate 4WD N57D30C		Propshaft	PS900138
	2012.01-2017.02		Front;Rear	Estate 4WD N57D30C		Flexible Coupling	517955
	2012.01-2017.02		Front;Rear	Estate 4WD N57D30C		Flexible Coupling	537668
	2012.01-2017.02		Front	Estate 4WD N57D30C		Flexible Coupling Kit	537668S
	2012.01-2017.02		Rear	Estate 4WD N57D30C		Flexible Coupling Kit	517957S
	2012.01-2017.02		Front;Rear	Estate 4WD N57D30C		Flexible Coupling Kit	517955S
3.0 (294 kw)	2017.07-		Front;Rear	Estate 4WD B57D30C		Flexible Coupling	517955
M550i xDrive							
4.4 (340 kw)	2017.03-2019.06		Front	Saloon 4WD N63B44C	Inner diameter:50mm	Flexible Coupling	537625
	2017.03-2019.06		Front	Saloon 4WD N63B44C	Inner diameter:48.5mm	Flexible Coupling	537631
	2017.03-2019.06		Front;Rear	Saloon 4WD N63B44C		Flexible Coupling	517955
4.4 (390 kw)	2019.07-2023.06		Front	Saloon 4WD N63B44D		Flexible Coupling	537631
	2019.07-2023.06		Front;Rear	Saloon 4WD N63B44D		Flexible Coupling	517955
M6 Cabrio							
5.0 (373 kw)	2006.09-2010.08		Front	Cabriolet RWD S85B50A		Flexible Coupling	538512
M6 Coupe							
5.0 (373 kw)	2005.04-2011.12		Front	Coupe RWD S85B50A		Flexible Coupling	538512
M6 Gran Coupe							
4.4 (412 kw)	2013.03-2018.10	MT	Rear	Coupe RWD S63B44B		Propshaft	PS900137
M760i xDrive							
6.6 (448 kw)	2016.07-2019.02	AT	Front	Saloon 4WD N74B66B		Propshaft	PS900139

	YEAR	TRANSM.	FITTING POSITION	BODY STYLE & DRIVE TYPE & ENGINE	REMARKS	PRODUCT	GSP Ref.
BMW							
M850i xDrive Cabrio							
4.4 (390 kw)	2019.03-		Front;Rear	Cabriolet 4WD N63B44D		Flexible Coupling	517955
M850i xDrive Coupe							
4.4 (390 kw)	2018.10-		Front;Rear	Coupe 4WD N63B44D		Flexible Coupling	517955
M850i xDrive Gran Coupe							
4.4 (390 kw)	2019.07-		Front	Coupe 4WD N63B44D		Flexible Coupling	510596
	2019.07-		Front;Rear	Coupe 4WD N63B44D		Flexible Coupling	517955
X1 sDrive 16d							
2.0 (85 kw)	2012.07-2015.06		Centre	SUV RWD N47D20C		Center Bearing Support	538672
	2012.07-2015.06		Front	SUV RWD N47D20C	510596 and 537625 different structure	Flexible Coupling	510596
	2012.07-2015.06		Front	SUV RWD N47D20C	537625 and 510596 different structure	Flexible Coupling	537625
	2012.07-2015.06		Rear	SUV RWD N47D20C		Flexible Coupling	533878
	2012.07-2015.06		Front	SUV RWD N47D20C		Flexible Coupling Kit	510596S
	2012.07-2015.06		Rear	SUV RWD N47D20C		Flexible Coupling Kit	538112S
X1 sDrive 16i							
1.6 (105 kw)	2013.03-2015.06	8AT	Rear	SUV RWD N20B16A		Propshaft	PS901383
	2013.03-2015.06		Centre	SUV RWD N20B16A		Center Bearing Support	538672
	2013.03-2015.06		Front	SUV RWD N20B16A	510596 and 537625 different structure	Flexible Coupling	510596
	2013.03-2015.06		Front	SUV RWD N20B16A	537625 and 510596 different structure	Flexible Coupling	537625
	2013.03-2015.06		Rear	SUV RWD N20B16A		Flexible Coupling	533878
	2013.03-2015.06		Front	SUV RWD N20B16A		Flexible Coupling Kit	510596S
	2013.03-2015.06		Rear	SUV RWD N20B16A	AT	Flexible Coupling Kit	538112S
X1 sDrive 18d							
2.0 (100 kw)	2009.12-2015.06		Centre	SUV RWD N47D20C		Center Bearing Support	538672
	2009.12-2015.06		Front	SUV RWD N47D20C	510596 and 537625 different structure	Flexible Coupling	510596
	2009.12-2015.06		Front	SUV RWD N47D20C	537625 and 510596 different structure	Flexible Coupling	537625
	2009.12-2015.06		Rear	SUV RWD N47D20C		Flexible Coupling	533878
	2009.12-2015.06		Front	SUV RWD N47D20C		Flexible Coupling Kit	510596S
	2009.12-2015.06		Rear	SUV RWD N47D20C		Flexible Coupling Kit	538112S
2.0 (105 kw)	2009.12-2015.06		Centre	SUV RWD N47D20C		Center Bearing Support	538672
	2009.12-2015.06		Front	SUV RWD N47D20C	510596 and 537625 different structure	Flexible Coupling	510596
	2009.12-2015.06		Front	SUV RWD N47D20C	537625 and 510596 different structure	Flexible Coupling	537625
	2009.12-2015.06		Rear	SUV RWD N47D20C		Flexible Coupling	533878
	2009.12-2015.06		Front	SUV RWD N47D20C		Flexible Coupling Kit	510596S
	2009.12-2015.06		Rear	SUV RWD N47D20C		Flexible Coupling Kit	538112S
X1 sDrive 18i							
2.0 (100 kw)	2010.03-2015.06	AT	Rear	SUV RWD N46B20B	Date to:2012.07	Propshaft	PS900125
	2010.03-2015.06	AT	Rear	SUV RWD N46B20B	Date from:2012.08	Propshaft	PS900162
	2010.03-2015.06		Centre	SUV RWD N46B20B		Center Bearing Support	538672
	2010.03-2015.06		Front	SUV RWD N46B20B	Inner diameter:50mm,510596 and 537625 different structure	Flexible Coupling	510596
	2010.03-2015.06		Front	SUV RWD N46B20B	Inner diameter:38.5mm	Flexible Coupling	510641
	2010.03-2015.06		Front	SUV RWD N46B20B	Inner diameter:50mm,537625 and 510596 different structure	Flexible Coupling	537625
	2010.03-2015.06		Front	SUV RWD N46B20B	Inner diameter:50mm,510596S and 537625S different structure	Flexible Coupling Kit	510596S
	2010.03-2015.06		Front	SUV RWD N46B20B	AT,Inner diameter:38.5mm	Flexible Coupling Kit	510641S
	2010.03-2015.06		Front	SUV RWD N46B20B	Inner diameter:50mm,537625S and 510596S different structure	Flexible Coupling Kit	537625S
2.0 (110 kw)	2010.03-2015.06	AT	Rear	SUV RWD N46B20B/N46B20BD	Date to:2012.07	Propshaft	PS900125
	2010.03-2015.06	AT	Rear	SUV RWD N46B20B/N46B20BD	Date from:2012.08	Propshaft	PS900162
	2010.03-2015.06		Centre	SUV RWD N46B20B/N46B20BD		Center Bearing Support	538672
	2010.03-2015.06		Front	SUV RWD N46B20B/N46B20BD		Flexible Coupling	510596
	2010.03-2015.06		Front	SUV RWD N46B20B/N46B20BD		Flexible Coupling	510641
	2010.03-2015.06		Front	SUV RWD N46B20B/N46B20BD		Flexible Coupling	537625
	2010.03-2015.06		Front	SUV RWD N46B20B/N46B20BD		Flexible Coupling Kit	510596S
	2010.03-2015.06		Front	SUV RWD N46B20B/N46B20BD		Flexible Coupling Kit	510641S
	2010.03-2015.06		Front	SUV RWD N46B20B/N46B20BD		Flexible Coupling Kit	537625S
X1 sDrive 20d							
2.0 (120 kw)	2010.03-2015.06		Centre	SUV RWD N47D20C		Center Bearing Support	538672
	2010.03-2015.06		Front	SUV RWD N47D20C	510596 and 537625 different structure	Flexible Coupling	510596
	2010.03-2015.06		Front	SUV RWD N47D20C	537625 and 510596 different structure	Flexible Coupling	537625
	2010.03-2015.06		Rear	SUV RWD N47D20C		Flexible Coupling	533878
	2010.03-2015.06		Front;Rear	SUV RWD N47D20C		Flexible Coupling	517955
	2010.03-2015.06		Front	SUV RWD N47D20C		Flexible Coupling Kit	510596S
	2010.03-2015.06		Rear	SUV RWD N47D20C	AT	Flexible Coupling Kit	538112S
	2010.03-2015.06		Front;Rear	SUV RWD N47D20C		Flexible Coupling Kit	517955S
2.0 (130 kw)	2009.10-2015.06		Centre	SUV RWD N47D20C		Center Bearing Support	538672
	2009.10-2015.06		Front	SUV RWD N47D20C	510596 and 537625 different structure	Flexible Coupling	510596

	YEAR	TRANSM.	FITTING POSITION	BODY STYLE & DRIVE TYPE & ENGINE	REMARKS	PRODUCT	GSP Ref.
BMW							
X1 sDrive 20d							
2.0 (130 kw)	2009.10-2015.06		Front	SUV RWD N47D20C	537625 and 510596 different structure	Flexible Coupling	537625
	2009.10-2015.06		Rear	SUV RWD N47D20C		Flexible Coupling	533878
	2009.10-2015.06		Front;Rear	SUV RWD N47D20C		Flexible Coupling	517955
	2009.10-2015.06		Front	SUV RWD N47D20C		Flexible Coupling Kit	510596S
	2009.10-2015.06		Rear	SUV RWD N47D20C	AT	Flexible Coupling Kit	538112S
	2009.10-2015.06		Front;Rear	SUV RWD N47D20C		Flexible Coupling Kit	517955S
2.0 (135 kw)	2012.07-2015.06		Centre	SUV RWD N47D20C		Center Bearing Support	538672
	2012.07-2015.06		Front	SUV RWD N47D20C	510596 and 537625 different structure	Flexible Coupling	510596
	2012.07-2015.06		Front	SUV RWD N47D20C	537625 and 510596 different structure	Flexible Coupling	537625
	2012.07-2015.06		Rear	SUV RWD N47D20C		Flexible Coupling	533878
	2012.07-2015.06		Front;Rear	SUV RWD N47D20C		Flexible Coupling	517955
	2012.07-2015.06		Front	SUV RWD N47D20C		Flexible Coupling Kit	510596S
	2012.07-2015.06		Rear	SUV RWD N47D20C	AT	Flexible Coupling Kit	538112S
	2012.07-2015.06		Front;Rear	SUV RWD N47D20C		Flexible Coupling Kit	517955S
X1 sDrive 20i							
2.0 (135 kw)	2011.09-2015.06	8AT	Rear	SUV RWD N20B20A		Propshaft	PS901383
	2011.09-2015.06		Centre	SUV RWD N20B20A		Center Bearing Support	538672
	2011.09-2015.06		Front	SUV RWD N20B20A	510596 and 537625 different structure	Flexible Coupling	510596
	2011.09-2015.06		Front	SUV RWD N20B20A	537625 and 510596 different structure	Flexible Coupling	537625
	2011.09-2015.06		Rear	SUV RWD N20B20A		Flexible Coupling	533878
	2011.09-2015.06		Front	SUV RWD N20B20A		Flexible Coupling Kit	510596S
	2011.09-2015.06		Rear	SUV RWD N20B20A	AT	Flexible Coupling Kit	538112S
X1 sDrive 28i							
2.0 (180 kw)	2013.01-2015.06	8AT	Rear	SUV RWD N20B20A		Propshaft	PS901383
	2013.01-2015.06		Centre	SUV RWD N20B20A		Center Bearing Support	538672
	2013.01-2015.06		Rear	SUV RWD N20B20A		Flexible Coupling Kit	538112S
X1 xDrive 18d							
2.0 (100 kw)	2009.12-2015.06	AT	Front	SUV 4WD N47D20C		Propshaft	PS900124
	2009.12-2015.06	AT	Rear	SUV 4WD N47D20C		Propshaft	PS900123
	2009.12-2015.06		Centre	SUV 4WD N47D20C		Center Bearing Support	538672
	2009.12-2015.06		Front	SUV 4WD N47D20C		Flexible Coupling	517956
	2009.12-2015.06		Rear	SUV 4WD N47D20C		Flexible Coupling	533878
	2009.12-2015.06		Front	SUV 4WD N47D20C		Flexible Coupling Kit	517956S
	2009.12-2015.06		Rear	SUV 4WD N47D20C		Flexible Coupling Kit	538112S
	2015.11-2022.06		Centre	SUV 4WD B47C20A		Center Bearing Support	538640
	2015.11-2022.06		Front	SUV 4WD B47C20A		Flexible Coupling	510597
	2015.11-2022.06		Front	SUV 4WD B47C20A		Flexible Coupling Kit	510597S
2.0 (105 kw)	2009.10-2015.06	AT	Front	SUV 4WD N47D20C		Propshaft	PS900124
	2009.10-2015.06	AT	Rear	SUV 4WD N47D20C		Propshaft	PS900123
	2009.10-2015.06		Centre	SUV 4WD N47D20C		Center Bearing Support	538672
	2009.10-2015.06		Front	SUV 4WD N47D20C	Inner diameter:50mm	Flexible Coupling	510596
	2009.10-2015.06		Front	SUV 4WD N47D20C	Inner diameter:57.5mm	Flexible Coupling	517956
	2009.10-2015.06		Rear	SUV 4WD N47D20C		Flexible Coupling	533878
	2009.10-2015.06		Front	SUV 4WD N47D20C		Flexible Coupling Kit	517956S
	2009.10-2015.06		Rear	SUV 4WD N47D20C		Flexible Coupling Kit	538112S
2.0 (110 kw)	2015.11-2022.06		Centre	SUV 4WD B47C20A/B47C20B		Center Bearing Support	538640
	2015.11-2022.06		Front	SUV 4WD B47C20A/B47C20B		Flexible Coupling	510597
	2015.11-2022.06		Front	SUV 4WD B47C20A/B47C20B		Flexible Coupling Kit	510597S
X1 xDrive 20d							
2.0 (120 kw)	2010.03-2015.06	AT	Front	SUV 4WD N47D20C		Propshaft	PS900124
	2010.03-2015.06	AT	Rear	SUV 4WD N47D20C		Propshaft	PS900123
	2010.03-2015.06		Centre	SUV 4WD N47D20C		Center Bearing Support	538672
	2010.03-2015.06		Rear	SUV 4WD N47D20C		Flexible Coupling	533878
	2010.03-2015.06		Front	SUV 4WD N47D20C		Flexible Coupling Kit	517956S
	2010.03-2015.06		Rear	SUV 4WD N47D20C		Flexible Coupling Kit	538112S
	2015.11-2022.06		Centre	SUV 4WD B47C20A/B47C20B		Center Bearing Support	538640
	2015.11-2022.06		Front	SUV 4WD B47C20A/B47C20B		Flexible Coupling	510597
	2015.11-2022.06		Front	SUV 4WD B47C20A/B47C20B		Flexible Coupling Kit	510597S
2.0 (130 kw)	2009.10-2012.06	AT	Front	SUV 4WD N47D20C		Propshaft	PS900124
	2009.10-2012.06	AT	Rear	SUV 4WD N47D20C		Propshaft	PS900123
	2009.10-2012.06		Centre	SUV 4WD N47D20C		Center Bearing Support	538672
	2009.10-2012.06		Front	SUV 4WD N47D20C		Flexible Coupling	517956
	2009.10-2012.06		Rear	SUV 4WD N47D20C		Flexible Coupling	533878
	2009.10-2012.06		Front	SUV 4WD N47D20C		Flexible Coupling Kit	517956S

	YEAR	TRANSM.	FITTING POSITION	BODY STYLE & DRIVE TYPE & ENGINE	REMARKS	PRODUCT	GSP Ref.
BMW							
X1 xDrive 20d							
2.0 (130 kw)	2009.10-2012.06		Rear	SUV 4WD N47D20C		Flexible Coupling Kit	538112S
2.0 (135 kw)	2012.07-2015.06	AT	Front	SUV 4WD N47D20C		Propshaft	PS900124
	2012.07-2015.06	AT	Rear	SUV 4WD N47D20C		Propshaft	PS900123
	2012.07-2015.06		Centre	SUV 4WD N47D20C		Center Bearing Support	538672
	2012.07-2015.06		Front	SUV 4WD N47D20C		Flexible Coupling	517956
	2012.07-2015.06		Rear	SUV 4WD N47D20C		Flexible Coupling	533878
	2012.07-2015.06		Front	SUV 4WD N47D20C		Flexible Coupling Kit	517956S
	2012.07-2015.06		Rear	SUV 4WD N47D20C		Flexible Coupling Kit	538112S
2.0 (140 kw)	2015.11-2022.06		Centre	SUV 4WD B47C20A/B47C20B		Center Bearing Support	538640
	2015.11-2022.06		Front	SUV 4WD B47C20A/B47C20B		Flexible Coupling	510597
	2015.11-2022.06		Front	SUV 4WD B47C20A/B47C20B		Flexible Coupling Kit	510597S
X1 xDrive 20i							
2.0 (131 kw)	2020.11-2022.06		Centre	SUV 4WD B48A20A/B48A20F		Center Bearing Support	538640
	2020.11-2022.06		Front	SUV 4WD B48A20A/B48A20F		Flexible Coupling	510597
	2020.11-2022.06		Front	SUV 4WD B48A20A/B48A20F		Flexible Coupling Kit	510597S
2.0 (135 kw)	2011.09-2015.06	AT	Front	SUV 4WD N20B20A		Propshaft	PS900124
	2011.09-2015.06	6MT	Rear	SUV 4WD N20B20A		Propshaft	PS901868
	2011.09-2015.06	AT	Rear	SUV 4WD N20B20A		Propshaft	PS900123
	2011.09-2015.06		Centre	SUV 4WD N20B20A		Center Bearing Support	538672
	2011.09-2015.06		Front	SUV 4WD N20B20A		Flexible Coupling	517956
	2011.09-2015.06		Rear	SUV 4WD N20B20A		Flexible Coupling	533878
	2011.09-2015.06		Front	SUV 4WD N20B20A		Flexible Coupling Kit	517956S
	2011.09-2015.06		Rear	SUV 4WD N20B20A		Flexible Coupling Kit	538112S
2.0 (141 kw)	2015.07-2022.06		Centre	SUV 4WD B48A20A/B48A20B/B48A20F		Center Bearing Support	538640
	2015.07-2022.06		Front	SUV 4WD B48A20A/B48A20B/B48A20F		Flexible Coupling	510597
	2015.07-2022.06		Front	SUV 4WD B48A20A/B48A20B/B48A20F		Flexible Coupling Kit	510597S
X1 xDrive 23d							
2.0 (150 kw)	2009.09-2015.06	AT	Front	SUV 4WD N47D20D		Propshaft	PS900124
	2009.09-2015.06		Centre	SUV 4WD N47D20D		Center Bearing Support	538672
	2009.09-2015.06		Front	SUV 4WD N47D20D		Flexible Coupling	517956
	2009.09-2015.06		Front;Rear	SUV 4WD N47D20D		Flexible Coupling	517955
	2009.09-2015.06		Front	SUV 4WD N47D20D		Flexible Coupling Kit	517956S
	2009.09-2015.06		Front;Rear	SUV 4WD N47D20D		Flexible Coupling Kit	517955S
2.0 (155 kw)	2022.07-		Front	SUV 4WD B47C20B		Flexible Coupling	510597
	2022.07-		Front	SUV 4WD B47C20B		Flexible Coupling Kit	510597S
X1 xDrive 23i							
2.0 (160 kw)	2022.07-		Front	SUV 4WD B48A20P		Flexible Coupling	510597
	2022.07-		Front	SUV 4WD B48A20P		Flexible Coupling Kit	510597S
X1 xDrive 25d							
2.0 (160 kw)	2012.07-2015.06	AT	Front	SUV 4WD N47D20D		Propshaft	PS900124
	2012.07-2015.06		Centre	SUV 4WD N47D20D	MT	Center Bearing Support	538664
	2012.07-2015.06		Centre	SUV 4WD N47D20D	AT	Center Bearing Support	538672
	2012.07-2015.06		Front	SUV 4WD N47D20D		Flexible Coupling	517956
	2012.07-2015.06		Front;Rear	SUV 4WD N47D20D		Flexible Coupling	517955
	2012.07-2015.06		Front	SUV 4WD N47D20D	Inner diameter:56.5mm	Flexible Coupling Kit	517956S
	2012.07-2015.06		Front	SUV 4WD N47D20D	Inner diameter:55mm	Flexible Coupling Kit	537669S
2.0 (170 kw)	2015.09-2022.05		Centre	SUV 4WD B47C20B		Center Bearing Support	538640
	2015.09-2022.05		Front	SUV 4WD B47C20B		Flexible Coupling	510597
	2015.09-2022.05		Front	SUV 4WD B47C20B		Flexible Coupling Kit	510597S
X1 xDrive 25e							
1.5 (162 kw)	2020.03-2022.06		Centre	SUV 4WD B38A15A		Center Bearing Support	538640
	2020.03-2022.06		Front	SUV 4WD B38A15A		Flexible Coupling	510597
	2020.03-2022.06		Front	SUV 4WD B38A15A		Flexible Coupling Kit	510597S
X1 xDrive 25i							
2.0 (170 kw)	2015.07-2021.10		Centre	SUV 4WD B46A20B/B48A20B		Center Bearing Support	538640
	2015.07-2021.10		Front	SUV 4WD B46A20B/B48A20B		Flexible Coupling	510597
	2015.07-2021.10		Front	SUV 4WD B46A20B/B48A20B		Flexible Coupling Kit	510597S
3.0 (160 kw)	2010.03-2011.08		Centre	SUV 4WD N52B30A		Center Bearing Support	538672
X1 xDrive 28i							
2.0 (180 kw)	2011.03-2015.06	6MT	Rear	SUV 4WD N20B20A		Propshaft	PS901868
	2011.03-2015.06		Centre	SUV 4WD N20B20A		Center Bearing Support	538672
	2011.03-2015.06		Front	SUV 4WD N20B20A		Flexible Coupling	517956
	2011.03-2015.06		Rear	SUV 4WD N20B20A		Flexible Coupling	533878
	2011.03-2015.06		Front	SUV 4WD N20B20A		Flexible Coupling Kit	517956S

	YEAR	TRANSM.	FITTING POSITION	BODY STYLE & DRIVE TYPE & ENGINE	REMARKS	PRODUCT	GSP Ref.
BMW							
X1 xDrive 28i							
2.0 (180 kw)	2011.04-2015.06	AT	Front	SUV 4WD N20 B20 A		Propshaft	PS900124
	2011.04-2015.06	AT	Rear	SUV 4WD N20 B20 A		Propshaft	PS900123
3.0 (190 kw)	2009.09-2011.08	AT	Front	SUV 4WD N52B30A		Propshaft	PS900124
	2009.09-2011.08		Centre	SUV 4WD N52B30A		Center Bearing Support	538672
	2009.09-2011.08		Rear	SUV 4WD N52B30A		Flexible Coupling	533878
3.0 (194 kw)	2010.03-2011.06	AT	Front	SUV 4WD N52B30A		Propshaft	PS900124
X1 xDrive 35i							
3.0 (225 kw)	2011.03-2015.06	AT	Front	SUV 4WD N55 B30 A		Propshaft	PS900124
X2 xDrive 18d							
2.0 (100 kw)	2018.03-2023.10		Front	SUV 4WD B47C20A/B47C20B		Flexible Coupling	510597
	2018.03-2023.10		Front	SUV 4WD B47C20A/B47C20B		Flexible Coupling Kit	510597S
2.0 (110 kw)	2018.03-2023.10		Front	SUV 4WD B47C20B		Flexible Coupling	510597
	2018.03-2023.10		Front	SUV 4WD B47C20B		Flexible Coupling Kit	510597S
X2 xDrive 20d							
2.0 (120 kw)	2017.11-2023.10		Front	SUV 4WD B47C20A		Flexible Coupling	510597
	2017.11-2023.10		Front	SUV 4WD B47C20A		Flexible Coupling Kit	510597S
	2023.11-		Centre	SUV 4WD B47C20B		Center Bearing Support	538640
	2023.11-		Front	SUV 4WD B47C20B		Flexible Coupling	510597
	2023.11-		Front	SUV 4WD B47C20B		Flexible Coupling Kit	510597S
2.0 (140 kw)	2017.11-2023.10		Front	SUV 4WD B47C20A/B47C20B		Flexible Coupling	510597
	2017.11-2023.10		Front	SUV 4WD B47C20A/B47C20B		Flexible Coupling Kit	510597S
X2 xDrive 20i							
2.0 (131 kw)	2020.11-2023.10		Front	SUV 4WD B48A20A		Flexible Coupling	510597
	2020.11-2023.10		Front	SUV 4WD B48A20A		Flexible Coupling Kit	510597S
2.0 (141 kw)	2018.03-2020.10		Front	SUV 4WD B48A20A		Flexible Coupling	510597
	2018.03-2020.10		Front	SUV 4WD B48A20A		Flexible Coupling Kit	510597S
X2 xDrive 25d							
2.0 (170 kw)	2017.11-2023.09		Front	SUV 4WD B47C20B		Flexible Coupling	510597
	2017.11-2023.09		Front	SUV 4WD B47C20B		Flexible Coupling Kit	510597S
X2 xDrive M35i							
2.0 (221 kw)	2023.11-		Centre	SUV 4WD B48A20H		Center Bearing Support	538640
	2023.11-		Front	SUV 4WD B48A20H		Flexible Coupling	510597
	2023.11-		Front	SUV 4WD B48A20H		Flexible Coupling Kit	510597S
2.0 (225 kw)	2018.11-2023.10		Front	SUV 4WD B48A20E		Flexible Coupling	510597
	2018.11-2023.10		Front	SUV 4WD B48A20E		Flexible Coupling Kit	510597S
X3							
2.0 (110 kw)	2004.09-2007.08	6MT	Front	SUV 4WD M47D204D4	Model year to:2005	Propshaft	PS900153
	2004.09-2007.08	MT	Front	SUV 4WD M47D204D4	Model year from:2006	Propshaft	PS900122
	2004.09-2007.08		Centre	SUV 4WD M47D204D4	Height:48mm	Center Bearing Support	538647
	2004.09-2007.08		Centre	SUV 4WD M47D204D4	Height:50mm	Center Bearing Support	538673
	2004.09-2007.08		Front	SUV 4WD M47D204D4	510596 and 537625 different structure	Flexible Coupling	510596
	2004.09-2007.08		Front	SUV 4WD M47D204D4	Inner diameter:44mm	Flexible Coupling	530160
	2004.09-2007.08		Front	SUV 4WD M47D204D4	537625 and 510596 different structure	Flexible Coupling	537625
	2004.09-2007.08		Front	SUV 4WD M47D204D4	Inner diameter:48.5mm	Flexible Coupling	537631
	2004.09-2007.08		Front	SUV 4WD M47D204D4	Bolt Hole Centres:110mm	Flexible Coupling Kit	530160S
	2004.09-2007.08		Front	SUV 4WD M47D204D4	Bolt Hole Centres:96mm	Flexible Coupling Kit	537631S
	2005.09-2008.08		Front	SUV 4WD N46B20B	Inner diameter:50mm,510596 and 537625 different structure	Flexible Coupling	510596
	2005.09-2008.08		Front	SUV 4WD N46B20B	Inner diameter:50mm,537625 and 510596 different structure	Flexible Coupling	537625
	2005.09-2008.08		Front	SUV 4WD N46B20B	Inner diameter:48.5mm	Flexible Coupling	537631
	2005.09-2008.08		Front	SUV 4WD N46B20B		Flexible Coupling Kit	537631S
2.0 (130 kw)	2007.09-2008.08	AT	Rear	SUV 4WD N47D20A		Propshaft	PS901382
	2007.09-2008.08		Centre	SUV 4WD N47D20A	Height:48mm	Center Bearing Support	538647
	2007.09-2008.08		Centre	SUV 4WD N47D20A	Height:50mm	Center Bearing Support	538673
	2007.09-2008.08		Front	SUV 4WD N47D20A	Inner diameter:50mm	Flexible Coupling	510596
	2007.09-2008.08		Front	SUV 4WD N47D20A	Inner diameter:44mm	Flexible Coupling	530160
	2007.09-2008.08		Front	SUV 4WD N47D20A	Inner diameter:43.5mm	Flexible Coupling	530758
	2007.09-2008.08		Front	SUV 4WD N47D20A		Flexible Coupling Kit	530758S
2.5 (141 kw)	2004.03-2006.07	AT	Front	SUV 4WD M54B256S5	Model year from:2005	Propshaft	PS900153
	2004.03-2006.07	AT	Rear	SUV 4WD M54B256S5		Propshaft	PS900154
	2004.03-2006.07	MT	Rear	SUV 4WD M54B256S5		Propshaft	PS900163
	2004.03-2006.07		Centre	SUV 4WD M54B256S5		Center Bearing Support	538647
	2004.03-2006.07		Front	SUV 4WD M54B256S5	Inner diameter:50mm,510596 and 537625 different structure	Flexible Coupling	510596
	2004.03-2006.07		Front	SUV 4WD M54B256S5	Inner diameter:44mm	Flexible Coupling	530160
	2004.03-2006.07		Front	SUV 4WD M54B256S5	Inner diameter:50mm,537625 and 510596 different structure	Flexible Coupling	537625

	YEAR	TRANSM.	FITTING POSITION	BODY STYLE & DRIVE TYPE & ENGINE	REMARKS	PRODUCT	GSP Ref.
BMW							
X3							
2.5 (141 kw)	2004.03-2006.07		Front	SUV 4WD M54B256S5	Inner diameter:48.5mm	Flexible Coupling	537631
	2004.03-2006.07		Front	SUV 4WD M54B256S5		Flexible Coupling Kit	537631S
2.5 (155 kw)	2006.08-2008.08		Front	SUV 4WD N52B25A/N52B25AF/N52B25BF		Flexible Coupling	530160
	2006.08-2008.08		Front	SUV 4WD N52B25A/N52B25AF/N52B25BF		Flexible Coupling Kit	530758S
2.5 (160 kw)	2006.08-2008.08	6AT	Rear	SUV 4WD N52B25A/N52B25AF/N52B25BF		Propshaft	PS900156
	2006.08-2008.08	6MT	Rear	SUV 4WD N52B25A/N52B25AF/N52B25BF		Propshaft	PS900157
	2006.08-2008.08		Centre	SUV 4WD N52B25A/N52B25AF/N52B25BF		Center Bearing Support	538647
	2006.08-2008.08		Front	SUV 4WD N52B25A/N52B25AF/N52B25BF	Inner diameter:50mm	Flexible Coupling	510596
	2006.08-2008.08		Front	SUV 4WD N52B25A/N52B25AF/N52B25BF	Inner diameter:44mm	Flexible Coupling	530160
	2006.08-2008.08		Front	SUV 4WD N52B25A/N52B25AF/N52B25BF	Inner diameter:43.5mm	Flexible Coupling	530758
	2006.08-2008.08		Front	SUV 4WD N52B25A/N52B25AF/N52B25BF		Flexible Coupling Kit	530758S
3.0 (150 kw)	2003.10-2005.08	AT	Front	SUV 4WD M57D306D2		Propshaft	PS900153
	2003.10-2005.08		Centre	SUV 4WD M57D306D2		Center Bearing Support	538647
	2003.10-2005.08		Front	SUV 4WD M57D306D2	Inner diameter:50mm;510596 and 537625 different structure	Flexible Coupling	510596
	2003.10-2005.08		Front	SUV 4WD M57D306D2	Inner diameter:50mm;537625 and 510596 different structure	Flexible Coupling	537625
	2003.10-2005.08		Front	SUV 4WD M57D306D2	Inner diameter:48.5mm	Flexible Coupling	537631
	2003.10-2005.08		Front	SUV 4WD M57D306D2		Flexible Coupling Kit	537631S
3.0 (160 kw)	2004.10-2008.08	AT	Front	SUV 4WD M57D306D3		Propshaft	PS900153
	2004.10-2008.08		Centre	SUV 4WD M57D306D3		Center Bearing Support	538647
	2004.10-2008.08		Front	SUV 4WD M57D306D3	510596 and 537625 different structure	Flexible Coupling	510596
	2004.10-2008.08		Front	SUV 4WD M57D306D3	537625 and 510596 different structure	Flexible Coupling	537625
	2004.10-2008.08		Front	SUV 4WD M57D306D3		Flexible Coupling Kit	537631S
3.0 (168 kw)	2004.01-2006.12	AT	Front	SUV 4WD M54 B30 (306S3)	Model year from:2005	Propshaft	PS900153
	2004.01-2006.12	MT	Rear	SUV 4WD M54 B30 (306S3)		Propshaft	PS900163
3.0 (170 kw)	2003.09-2006.07		Centre	SUV 4WD M54B306S3		Center Bearing Support	538647
	2003.09-2006.07		Front	SUV 4WD M54B306S3	Inner diameter:50mm;510596 and 537625 different structure	Flexible Coupling	510596
	2003.09-2006.07		Front	SUV 4WD M54B306S3	Inner diameter:50mm;537625 and 510596 different structure	Flexible Coupling	537625
	2003.09-2006.07		Front	SUV 4WD M54B306S3	Inner diameter:48.5mm	Flexible Coupling	537631
	2003.09-2006.07		Front	SUV 4WD M54B306S3		Flexible Coupling Kit	537631S
3.0 (194 kw)	2007.01-2008.12	6AT	Rear	SUV 4WD N52B30A/N52KB30		Propshaft	PS900156
	2007.01-2008.12	6MT	Rear	SUV 4WD N52B30A/N52KB30		Propshaft	PS900157
3.0 (200 kw)	2006.08-2008.08	6AT	Rear	SUV 4WD N52B30A/N52B30BF		Propshaft	PS900156
	2006.08-2008.08	6MT	Rear	SUV 4WD N52B30A/N52B30BF		Propshaft	PS900157
	2006.08-2008.08		Centre	SUV 4WD N52B30A/N52B30BF		Center Bearing Support	538647
	2006.08-2008.08		Front	SUV 4WD N52B30A/N52B30BF	Inner diameter:50mm	Flexible Coupling	510596
	2006.08-2008.08		Front	SUV 4WD N52B30A/N52B30BF	Inner diameter:44mm	Flexible Coupling	530160
	2006.08-2008.08		Front	SUV 4WD N52B30A/N52B30BF	Inner diameter:43.5mm	Flexible Coupling	530758
	2006.08-2008.08		Front	SUV 4WD N52B30A/N52B30BF		Flexible Coupling Kit	530758S
3.0 (210 kw)	2006.09-2008.08		-	SUV 4WD M57D306D5		Joint,propshaft	630003
	2006.09-2008.08		Centre	SUV 4WD M57D306D5		Center Bearing Support	538647
	2006.09-2008.08		Front	SUV 4WD M57D306D5	Inner diameter:50mm	Flexible Coupling	510596
	2006.09-2008.08		Front	SUV 4WD M57D306D5	Inner diameter:44mm	Flexible Coupling	530160
	2006.09-2008.08		Front	SUV 4WD M57D306D5	Inner diameter:43.5mm	Flexible Coupling	530758
	2006.09-2008.08		Front	SUV 4WD M57D306D5		Flexible Coupling Kit	530758S
X3 sDrive 18d							
2.0 (100 kw)	2012.10-2014.03		Centre	SUV RWD N47D20C		Center Bearing Support	538646
	2012.10-2014.03		Front;Rear	SUV RWD N47D20C		Flexible Coupling	517955
	2012.10-2014.03		Front;Rear	SUV RWD N47D20C		Flexible Coupling Kit	517955S
	2018.04-2020.06		Front	SUV RWD B47D20A/B47D20B	Width:30mm	Flexible Coupling	510596
	2018.04-2020.06		Front	SUV RWD B47D20A/B47D20B	Bolt Hole Centres:96mm,Width:32mm	Flexible Coupling	533422
	2018.04-2020.06		Front;Rear	SUV RWD B47D20A/B47D20B	Bolt Hole Centres:105mm	Flexible Coupling	517955
2.0 (105 kw)	2012.10-2014.03		Centre	SUV RWD N47D20C		Center Bearing Support	538646
	2012.10-2014.03		Front;Rear	SUV RWD N47D20C		Flexible Coupling	517955
	2012.10-2014.03		Front;Rear	SUV RWD N47D20C		Flexible Coupling Kit	517955S
2.0 (110 kw)	2014.04-2017.08		Centre	SUV RWD B47D20A		Center Bearing Support	539921
	2014.04-2017.08		Front;Rear	SUV RWD B47D20A		Flexible Coupling	517955
	2014.04-2017.08		Front;Rear	SUV RWD B47D20A		Flexible Coupling Kit	517955S
	2018.04-		Front	SUV Van RWD B47D20A/B47D20B	Width:30mm	Flexible Coupling	510596
	2018.04-		Front	SUV Van RWD B47D20A/B47D20B	Width:32mm	Flexible Coupling	533422
	2018.04-2020.06		Centre	SUV RWD B47D20A/B47D20B		Center Bearing Support	538656
	2018.04-2020.06		Front	SUV RWD B47D20A/B47D20B	Width:30mm	Flexible Coupling	510596
	2018.04-2020.06		Front	SUV RWD B47D20A/B47D20B	Bolt Hole Centres:96mm,Width:32mm	Flexible Coupling	533422
	2018.04-2020.06		Front;Rear	SUV RWD B47D20A/B47D20B	Bolt Hole Centres:105mm	Flexible Coupling	517955
	2020.07-		Centre	SUV RWD B47D20B		Center Bearing Support	538656

	YEAR	TRANSM.	FITTING POSITION	BODY STYLE & DRIVE TYPE & ENGINE	REMARKS	PRODUCT	GSP Ref.
BMW							
X3 sDrive 18d							
2.0 (110 kw)	2020.07-		Front;Rear	SUV RWD B47D20B		Flexible Coupling	517955
X3 sDrive 20i							
1.6 (125 kw)	2014.04-2017.08	AT	Rear	SUV RWD N20B16A		Propshaft	PS901689
	2014.04-2017.08		Centre	SUV RWD N20B16A		Center Bearing Support	539921
	2014.04-2017.08		Front	SUV RWD N20B16A	510596 and 537625 different structure	Flexible Coupling	510596
	2014.04-2017.08		Front	SUV RWD N20B16A	537625 and 510596 different structure	Flexible Coupling	537625
	2014.04-2017.08		Rear	SUV RWD N20B16A		Flexible Coupling	533878
	2014.04-2017.08		Front	SUV RWD N20B16A		Flexible Coupling Kit	510596S
	2014.04-2017.08		Rear	SUV RWD N20B16A	AT	Flexible Coupling Kit	538112S
	2017.12-		Centre	SUV RWD B48B16A		Center Bearing Support	538656
	2017.12-		Front	SUV RWD B48B16A	Width:30mm	Flexible Coupling	510596
	2017.12-		Front	SUV RWD B48B16A	Width:32mm	Flexible Coupling	533422
2.0 (135 kw)	2014.04-2017.08	AT	Rear	SUV RWD N20B20A		Propshaft	PS901689
	2014.04-2017.08		Centre	SUV RWD N20B20A		Center Bearing Support	539921
	2014.04-2017.08		Front	SUV RWD N20B20A	510596 and 537625 different structure	Flexible Coupling	510596
	2014.04-2017.08		Front	SUV RWD N20B20A	537625 and 510596 different structure	Flexible Coupling	537625
	2014.04-2017.08		Rear	SUV RWD N20B20A		Flexible Coupling	533878
	2014.04-2017.08		Front	SUV RWD N20B20A		Flexible Coupling Kit	510596S
	2014.04-2017.08		Rear	SUV RWD N20B20A	AT	Flexible Coupling Kit	538112S
	2017.12-		Centre	SUV RWD B48B20A		Center Bearing Support	538656
	2017.12-		Front	SUV RWD B48B20A	Width:30mm	Flexible Coupling	510596
	2017.12-		Front	SUV RWD B48B20A	Width:32mm	Flexible Coupling	533422
X3 sDrive 28i							
2.0 (180 kw)	2014.04-2017.08	AT	Rear	SUV RWD N20 B20 A		Propshaft	PS901689
X3 xDrive 18d							
2.0 (100 kw)	2009.04-2011.12		Front	SUV 4WD N47D20C		Flexible Coupling	530160
	2009.04-2011.12		Front	SUV 4WD N47D20C		Flexible Coupling Kit	530758S
2.0 (105 kw)	2008.09-2011.12		Centre	SUV 4WD N47D20C	Height:48mm	Center Bearing Support	538647
	2008.09-2011.12		Centre	SUV 4WD N47D20C	Height:50mm	Center Bearing Support	538673
	2008.09-2011.12		Front	SUV 4WD N47D20C	Inner diameter:50mm	Flexible Coupling	510596
	2008.09-2011.12		Front	SUV 4WD N47D20C	Inner diameter:44mm	Flexible Coupling	530160
	2008.09-2011.12		Front	SUV 4WD N47D20C	Inner diameter:43.5mm	Flexible Coupling	530758
	2008.09-2011.12		Front	SUV 4WD N47D20C		Flexible Coupling Kit	530758S
X3 xDrive 20d							
2.0 (120 kw)	2008.09-2010.08	AT	Rear	SUV 4WD N47D20A/N47D20C		Propshaft	PS901382
	2008.09-2010.08		Front	SUV 4WD N47D20A/N47D20C	Inner diameter:50mm	Flexible Coupling	510596
	2008.09-2010.08		Front	SUV 4WD N47D20A/N47D20C	Inner diameter:44mm	Flexible Coupling	530160
	2008.09-2010.08		Front	SUV 4WD N47D20A/N47D20C		Flexible Coupling Kit	530758S
	2010.09-2017.08	AT	Front	SUV 4WD B47D20A/N47D20C		Propshaft	PS900161
	2010.09-2017.08	8AT	Rear	SUV 4WD B47D20A/N47D20C		Propshaft	PS900164
	2010.09-2017.08		Centre	SUV 4WD B47D20A/N47D20C		Center Bearing Support	539921
	2010.09-2017.08		Front	SUV 4WD B47D20A/N47D20C	510596 and 537625 different structure	Flexible Coupling	510596
	2010.09-2017.08		Front	SUV 4WD B47D20A/N47D20C	537625 and 510596 different structure	Flexible Coupling	537625
	2010.09-2017.08		Front	SUV 4WD B47D20A/N47D20C		Flexible Coupling Kit	510596S
	2017.08-2020.03		Front	SUV 4WD B47D20A/B47D20B		Flexible Coupling	537849
2.0 (130 kw)	2008.09-2010.08	AT	Rear	SUV 4WD N47D20A/N47D20C		Propshaft	PS901382
	2008.09-2010.08		Centre	SUV 4WD N47D20A/N47D20C		Center Bearing Support	538647
	2008.09-2010.08		Front	SUV 4WD N47D20A/N47D20C	Inner diameter:50mm	Flexible Coupling	510596
	2008.09-2010.08		Front	SUV 4WD N47D20A/N47D20C	Inner diameter:44mm	Flexible Coupling	530160
	2008.09-2010.08		Front	SUV 4WD N47D20A/N47D20C		Flexible Coupling Kit	530758S
2.0 (135 kw)	2010.09-2014.03	AT	Front	SUV 4WD N47D20C		Propshaft	PS900161
	2010.09-2014.03	AT	Rear	SUV 4WD N47D20C		Propshaft	PS900164
	2010.09-2014.03		Centre	SUV 4WD N47D20C		Center Bearing Support	539921
	2010.09-2014.03		Front	SUV 4WD N47D20C	Inner diameter:50mm,510596 and 537625 different structure	Flexible Coupling	510596
	2010.09-2014.03		Front	SUV 4WD N47D20C	Inner diameter:50mm,537625 and 510596 different structure	Flexible Coupling	537625
	2010.09-2014.03		Front	SUV 4WD N47D20C	Inner diameter:48.5mm	Flexible Coupling	537631
	2010.09-2014.03		Front	SUV 4WD N47D20C		Flexible Coupling Kit	510596S
2.0 (140 kw)	2014.04-2017.08	AT	Front	SUV 4WD B47D20A		Propshaft	PS900161
	2014.04-2017.08	8AT	Rear	SUV 4WD B47D20A		Propshaft	PS900164
	2014.04-2017.08		Centre	SUV 4WD B47D20A		Center Bearing Support	539921
	2014.04-2017.08		Front	SUV 4WD B47D20A	510596 and 537625 different structure	Flexible Coupling	510596
	2014.04-2017.08		Front	SUV 4WD B47D20A	537625 and 510596 different structure	Flexible Coupling	537625
	2014.04-2017.08		Front	SUV 4WD B47D20A		Flexible Coupling Kit	510596S
	2017.08-2020.03		Front	SUV 4WD B47D20A/B47D20B		Flexible Coupling	537849

	YEAR	TRANSM.	FITTING POSITION	BODY STYLE & DRIVE TYPE & ENGINE	REMARKS	PRODUCT	GSP Ref.
BMW							
X3 xDrive 20i							
2.0 (110 kw)	2008.09-2011.08		Front	SUV 4WD N46B20B	Inner diameter:50mm	Flexible Coupling	510596
	2008.09-2011.08		Front	SUV 4WD N46B20B	Inner diameter:48.5mm	Flexible Coupling	537631
2.0 (135 kw)	2011.10-2017.08	AT	Front	SUV 4WD N20B20A		Propshaft	PS900161
	2011.10-2017.08	8AT	Rear	SUV 4WD N20B20A		Propshaft	PS900164
	2011.10-2017.08		Front	SUV 4WD N20B20A	510596 and 537625 different structure	Flexible Coupling	510596
	2011.10-2017.08		Front	SUV 4WD N20B20A	537625 and 510596 different structure	Flexible Coupling	537625
	2011.10-2017.08		Front	SUV 4WD N20B20A		Flexible Coupling Kit	510596S
	2017.12-		Front	SUV 4WD B48B20A	Width:30mm;Inner diameter:50mm	Flexible Coupling	510596
	2017.12-		Front	SUV 4WD B48B20A	Width:32mm	Flexible Coupling	533422
	2017.12-		Front	SUV 4WD B48B20A	Inner diameter:48.5mm	Flexible Coupling	537849
	2017.12-		Front	SUV 4WD B48B20A		Flexible Coupling Kit	533422S
X3 xDrive 25d							
2.0 (155 kw)	2018.04-		Centre	SUV 4WD B47D20B		Center Bearing Support	538656
	2018.04-		Front	SUV 4WD B47D20B		Flexible Coupling	537631
2.0 (170 kw)	2018.04-		Centre	SUV 4WD B47D20B		Center Bearing Support	538656
	2018.04-		Front	SUV 4WD B47D20B		Flexible Coupling	537631
X3 xDrive 25i							
2.5 (160 kw)	2008.09-2010.08		Centre	SUV 4WD N52B25A/N52B25AF/N52B25BF		Center Bearing Support	538647
	2008.09-2010.08		Front	SUV 4WD N52B25A/N52B25AF/N52B25BF	Inner diameter:50mm	Flexible Coupling	510596
	2008.09-2010.08		Front	SUV 4WD N52B25A/N52B25AF/N52B25BF	Inner diameter:44mm	Flexible Coupling	530160
	2008.09-2010.08		Front	SUV 4WD N52B25A/N52B25AF/N52B25BF		Flexible Coupling Kit	530758S
X3 xDrive 28i							
2.0 (180 kw)	2012.04-2017.08	AT	Front	SUV 4WD N20B20A		Propshaft	PS900161
	2012.04-2017.08	8AT	Rear	SUV 4WD N20B20A		Propshaft	PS901460
	2012.04-2017.08		Centre	SUV 4WD N20B20A		Center Bearing Support	539921
	2012.04-2017.08		Front	SUV 4WD N20B20A	510596 and 537625 different structure	Flexible Coupling	510596
	2012.04-2017.08		Front	SUV 4WD N20B20A	537625 and 510596 different structure	Flexible Coupling	537625
	2012.04-2017.08		Front	SUV 4WD N20B20A		Flexible Coupling Kit	510596S
3.0 (190 kw)	2011.01-2012.10	AT	Front	SUV 4WD N52B30A/N52B30AF/N52B30BF		Propshaft	PS900161
	2011.01-2012.10	8AT	Rear	SUV 4WD N52B30A/N52B30AF/N52B30BF		Propshaft	PS900164
	2011.01-2012.10		Centre	SUV 4WD N52B30A/N52B30AF/N52B30BF		Center Bearing Support	539921
	2011.01-2012.10		Front	SUV 4WD N52B30A/N52B30AF/N52B30BF	510596 and 537625 different structure	Flexible Coupling	510596
	2011.01-2012.10		Front	SUV 4WD N52B30A/N52B30AF/N52B30BF	537625 and 510596 different structure	Flexible Coupling	537625
	2011.01-2012.10		Front	SUV 4WD N52B30A/N52B30AF/N52B30BF		Flexible Coupling Kit	510596S
X3 xDrive 30d							
3.0 (155 kw)	2008.09-2011.04		-	SUV 4WD M57D306D3		Joint,propshaft	630003
	2008.09-2011.04		Front	SUV 4WD M57D306D3	Inner diameter:50mm	Flexible Coupling	510596
	2008.09-2011.04		Front	SUV 4WD M57D306D3	Inner diameter:44mm	Flexible Coupling	530160
	2008.09-2011.04		Front	SUV 4WD M57D306D3		Flexible Coupling Kit	530758S
	2011.04-2017.08	AT	Front	SUV 4WD N57D30A		Propshaft	PS900161
	2011.04-2017.08		Centre	SUV 4WD N57D30A		Center Bearing Support	539921
	2011.04-2017.08		Front	SUV 4WD N57D30A		Flexible Coupling	510596
3.0 (160 kw)	2008.09-2011.04		Rear	SUV 4WD M57D306D3		Joint,propshaft	630003
	2008.09-2011.04		Centre	SUV 4WD M57D306D3		Center Bearing Support	538647
	2008.09-2011.04		Front	SUV 4WD M57D306D3	Inner diameter:50mm	Flexible Coupling	510596
	2008.09-2011.04		Front	SUV 4WD M57D306D3	Inner diameter:44mm	Flexible Coupling	530160
	2008.09-2011.04		Front	SUV 4WD M57D306D3	Inner diameter:48.5mm	Flexible Coupling	537631
	2008.09-2011.04		Front	SUV 4WD M57D306D3		Flexible Coupling Kit	530758S
3.0 (183 kw)	2011.06-2017.08	AT	Front	SUV 4WD N57D30A		Propshaft	PS900161
	2011.06-2017.08		Centre	SUV 4WD N57D30A		Center Bearing Support	539921
	2011.06-2017.08		Front	SUV 4WD N57D30A		Flexible Coupling	510596
	2018.04-2020.06		Front	SUV 4WD B57D30A		Flexible Coupling	510596
	2018.04-2020.06		Front;Rear	SUV 4WD B57D30A		Flexible Coupling	517955
	2020.07-		Front	SUV 4WD B57D30B		Flexible Coupling	510596
	2020.07-		Front;Rear	SUV 4WD B57D30B		Flexible Coupling	517955
3.0 (190 kw)	2011.04-2017.08	AT	Front	SUV 4WD N57D30A		Propshaft	PS900161
	2011.04-2017.08		Centre	SUV 4WD N57D30A		Center Bearing Support	539921
	2011.04-2017.08		Front	SUV 4WD N57D30A		Flexible Coupling	537631
3.0 (195 kw)	2017.07-2020.06		Front	SUV 4WD B57D30A		Flexible Coupling	510596
	2017.07-2020.06		Front;Rear	SUV 4WD B57D30A		Flexible Coupling	517955
3.0 (204 kw)	2016.06-2017.08	AT	Front	SUV 4WD N57D30A		Propshaft	PS900161
	2016.06-2017.08		Centre	SUV 4WD N57D30A		Center Bearing Support	539921
	2016.06-2017.08		Front	SUV 4WD N57D30A		Flexible Coupling	510596

	YEAR	TRANSM.	FITTING POSITION	BODY STYLE & DRIVE TYPE & ENGINE	REMARKS	PRODUCT	GSP Ref.
BMW							
X3 xDrive 30d							
3.0 (210 kw)	2011.04-2016.05	AT	Front	SUV 4WD N57D30A		Propshaft	PS900161
	2011.04-2016.05		Centre	SUV 4WD N57D30A		Center Bearing Support	539921
	2011.04-2016.05		Front	SUV 4WD N57D30A		Flexible Coupling	510596
	2020.07-		Front	SUV 4WD B57D30B		Flexible Coupling	510596
	2020.07-		Front;Rear	SUV 4WD B57D30B		Flexible Coupling	517955
X3 xDrive 30e							
2.0 (200 kw)	2023.01-		Centre	SUV 4WD B46B20B/B48B20A		Center Bearing Support	538656
	2023.01-		Front	SUV 4WD B46B20B/B48B20A		Flexible Coupling	510596
	2023.01-		Front	SUV 4WD B46B20B/B48B20A		Flexible Coupling Kit	510596S
2.0 (215 kw)	2019.12-		Centre	SUV 4WD B46B20B/B48B20A		Center Bearing Support	538656
	2019.12-		Front	SUV 4WD B46B20B/B48B20A		Flexible Coupling	510596
	2019.12-		Front	SUV 4WD B46B20B/B48B20A		Flexible Coupling Kit	510596S
X3 xDrive 30i							
2.0 (183 kw)	2017.08-		Front	SUV 4WD B48B20B		Flexible Coupling	537849
2.0 (185 kw)	2017.08-		Front	SUV 4WD B48B20B		Flexible Coupling	537849
3.0 (200 kw)	2008.09-2010.08		Centre	SUV 4WD N52B30A/N52B30BF		Center Bearing Support	538647
	2008.09-2010.08		Front	SUV 4WD N52B30A/N52B30BF	Inner diameter:50mm	Flexible Coupling	510596
	2008.09-2010.08		Front	SUV 4WD N52B30A/N52B30BF	Inner diameter:44mm	Flexible Coupling	530160
	2008.09-2010.08		Front	SUV 4WD N52B30A/N52B30BF		Flexible Coupling Kit	530758S
X3 xDrive 35d							
3.0 (210 kw)	2008.09-2011.08		Centre	SUV 4WD M57D306D5		Center Bearing Support	538647
	2008.09-2011.08		Front	SUV 4WD M57D306D5		Flexible Coupling	530160
3.0 (230 kw)	2011.10-2017.08	AT	Front	SUV 4WD N57D30B		Propshaft	PS900161
	2011.10-2017.08		Centre	SUV 4WD N57D30B		Center Bearing Support	539921
	2011.10-2017.08		Front	SUV 4WD N57D30B		Flexible Coupling	537631
X3 xDrive 35i							
3.0 (225 kw)	2010.09-2017.08	AT	Front	SUV 4WD N55B30A		Propshaft	PS900161
	2010.09-2017.08	8AT	Rear	SUV 4WD N55B30A		Propshaft	PS900164
	2010.09-2017.08		Centre	SUV 4WD N55B30A		Center Bearing Support	539921
	2010.09-2017.08		Front	SUV 4WD N55B30A	510596 and 537625 different structure	Flexible Coupling	510596
	2010.09-2017.08		Front	SUV 4WD N55B30A	537625 and 510596 different structure	Flexible Coupling	537625
	2010.09-2017.08		Front	SUV 4WD N55B30A		Flexible Coupling Kit	510596S
X3 xDrive M40d							
3.0 (240 kw)	2018.08-2020.06		Front	SUV 4WD B57D30B		Flexible Coupling	510596
3.0 (250 kw)	2020.07-		Front	SUV 4WD B57D30B		Flexible Coupling	510596
X3 xDrive M40i							
3.0 (260 kw)	2018.09-2019.08		Front	SUV 4WD B58B30A		Flexible Coupling	537849
3.0 (265 kw)	2017.08-		Front	SUV 4WD B58B30A		Flexible Coupling	537849
3.0 (285 kw)	2019.09-		Front	SUV 4WD B58B30B		Flexible Coupling	510596
X4 xDrive 20d							
2.0 (120 kw)	2014.04-2018.03	AT	Front	SUV 4WD B47D20A		Propshaft	PS900161
	2014.04-2018.03	8AT	Rear	SUV 4WD B47D20A		Propshaft	PS900164
	2014.04-2018.03		Centre	SUV 4WD B47D20A		Center Bearing Support	539921
	2014.04-2018.03		Front	SUV 4WD B47D20A	510596 and 537625 different structure	Flexible Coupling	510596
	2014.04-2018.03		Front	SUV 4WD B47D20A	537625 and 510596 different structure	Flexible Coupling	537625
	2014.04-2018.03		Front	SUV 4WD B47D20A		Flexible Coupling Kit	510596S
	2018.04-2020.08		Front	SUV 4WD B47D20A/B47D20B		Flexible Coupling	537631
2.0 (140 kw)	2014.04-2018.03	AT	Front	SUV 4WD B47D20A		Propshaft	PS900161
	2014.04-2018.03	8AT	Rear	SUV 4WD B47D20A		Propshaft	PS900164
	2014.04-2018.03		Centre	SUV 4WD B47D20A		Center Bearing Support	539921
	2014.04-2018.03		Front	SUV 4WD B47D20A	510596 and 537625 different structure	Flexible Coupling	510596
	2014.04-2018.03		Front	SUV 4WD B47D20A	537625 and 510596 different structure	Flexible Coupling	537625
	2014.04-2018.03		Front	SUV 4WD B47D20A		Flexible Coupling Kit	510596S
	2018.04-2020.08		Front	SUV 4WD B47D20A/B47D20B	510596 and 537849 and 537631 different structure	Flexible Coupling	510596
	2018.04-2020.08		Front	SUV 4WD B47D20A/B47D20B	537631 and 537849 and 510596 different structure	Flexible Coupling	537631
	2018.04-2020.08		Front	SUV 4WD B47D20A/B47D20B	537849 and 537631 and 510596 different structure	Flexible Coupling	537849
X4 xDrive 20i							
2.0 (135 kw)	2014.04-2018.03	AT	Front	SUV 4WD N20B20A		Propshaft	PS900161
	2014.04-2018.03	8AT	Rear	SUV 4WD N20B20A		Propshaft	PS900164
	2014.04-2018.03		Centre	SUV 4WD N20B20A		Center Bearing Support	539921
	2014.04-2018.03		Front	SUV 4WD N20B20A	510596 and 537625 different structure	Flexible Coupling	510596
	2014.04-2018.03		Front	SUV 4WD N20B20A	537625 and 510596 different structure	Flexible Coupling	537625
	2014.04-2018.03		Front	SUV 4WD N20B20A		Flexible Coupling Kit	510596S
	2018.04-		Front	SUV 4WD B48B20A	Inner diameter:50mm	Flexible Coupling	510596

	YEAR	TRANSM.	FITTING POSITION	BODY STYLE & DRIVE TYPE & ENGINE	REMARKS	PRODUCT	GSP Ref.
BMW							
X4 xDrive 20i							
2.0 (135 kw)	2018.04-		Front	SUV 4WD B48B20A	Inner diameter:48.5mm	Flexible Coupling	537849
X4 xDrive 25d							
2.0 (155 kw)	2018.04-		Centre	SUV 4WD B47D20B		Center Bearing Support	538656
	2018.04-		Front	SUV 4WD B47D20B		Flexible Coupling	537631
2.0 (170 kw)	2018.04-		Centre	SUV 4WD B47D20B		Center Bearing Support	538656
	2018.04-		Front	SUV 4WD B47D20B		Flexible Coupling	537631
X4 xDrive 28i							
2.0 (179 kw)	2014.04-2018.03	8AT	Rear	SUV 4WD N20 B20 A		Propshaft	PS901460
2.0 (180 kw)	2014.04-2018.03	AT	Front	SUV 4WD N20B20A		Propshaft	PS900161
	2014.04-2018.03	8AT	Rear	SUV 4WD N20B20A	for OE No.:26107589801	Propshaft	PS900164
	2014.04-2018.03	8AT	Rear	SUV 4WD N20B20A	for OE No.:26107630377	Propshaft	PS901460
	2014.04-2018.03		Centre	SUV 4WD N20B20A		Center Bearing Support	539921
	2014.04-2018.03		Front	SUV 4WD N20B20A	510596 and 537625 different structure	Flexible Coupling	510596
	2014.04-2018.03		Front	SUV 4WD N20B20A	537625 and 510596 different structure	Flexible Coupling	537625
	2014.04-2018.03		Front	SUV 4WD N20B20A		Flexible Coupling Kit	510596S
X4 xDrive 30d							
3.0 (155 kw)	2014.04-2018.03	AT	Front	SUV 4WD N57D30A		Propshaft	PS900161
	2014.04-2018.03		Centre	SUV 4WD N57D30A		Center Bearing Support	539921
	2014.04-2018.03		Front	SUV 4WD N57D30A		Flexible Coupling	510596
3.0 (183 kw)	2015.04-2018.03	AT	Front	SUV 4WD N57D30A		Propshaft	PS900161
	2015.04-2018.03		Front	SUV 4WD N57D30A		Flexible Coupling	510596
	2018.09-2020.06		Front	SUV 4WD B57D30A		Flexible Coupling	537631
	2018.09-2020.06		Front;Rear	SUV 4WD B57D30A		Flexible Coupling	517955
	2020.07-		Front;Rear	SUV 4WD B57D30B		Flexible Coupling	517955
3.0 (190 kw)	2014.04-2018.03	AT	Front	SUV 4WD N57D30A		Propshaft	PS900161
	2014.04-2018.03		Centre	SUV 4WD N57D30A		Center Bearing Support	539921
	2014.04-2018.03		Front	SUV 4WD N57D30A		Flexible Coupling	537631
3.0 (195 kw)	2018.04-2020.06		Front	SUV 4WD B57D30A		Flexible Coupling	537631
	2018.04-2020.06		Front;Rear	SUV 4WD B57D30A		Flexible Coupling	517955
3.0 (204 kw)	2014.04-2018.03	AT	Front	SUV 4WD N57D30A		Propshaft	PS900161
	2014.04-2018.03		Centre	SUV 4WD N57D30A		Center Bearing Support	539921
	2014.04-2018.03		Front	SUV 4WD N57D30A		Flexible Coupling	510596
3.0 (210 kw)	2014.04-2018.03	AT	Front	SUV 4WD N57D30A		Propshaft	PS900161
	2014.04-2018.03		Centre	SUV 4WD N57D30A		Center Bearing Support	539921
	2014.04-2018.03		Front	SUV 4WD N57D30A		Flexible Coupling	510596
	2020.07-		Front;Rear	SUV 4WD B57D30B		Flexible Coupling	517955
X4 xDrive 30i							
2.0 (180 kw)	2021.07-		Centre	SUV 4WD B46B20B/B48B20B		Center Bearing Support	538656
	2021.07-		Front	SUV 4WD B46B20B/B48B20B		Flexible Coupling Kit	537631S
2.0 (185 kw)	2018.04-		Front	SUV 4WD B48B20B	Inner diameter:50mm	Flexible Coupling	510596
	2018.04-		Front	SUV 4WD B48B20B	Inner diameter:48.5mm	Flexible Coupling	537849
X4 xDrive 35d							
3.0 (230 kw)	2014.04-2018.03	AT	Front	SUV 4WD N57D30B		Propshaft	PS900161
	2014.04-2018.03		Centre	SUV 4WD N57D30B		Center Bearing Support	539921
	2014.04-2018.03		Front	SUV 4WD N57D30B		Flexible Coupling	537631
X4 xDrive 35i							
3.0 (225 kw)	2014.04-2018.03	AT	Front	SUV 4WD N55B30A		Propshaft	PS900161
	2014.04-2018.03	8AT	Rear	SUV 4WD N55B30A		Propshaft	PS900164
	2014.04-2018.03		Centre	SUV 4WD N55B30A		Center Bearing Support	539921
	2014.04-2018.03		Front	SUV 4WD N55B30A	510596 and 537625 different structure	Flexible Coupling	510596
	2014.04-2018.03		Front	SUV 4WD N55B30A	537625 and 510596 different structure	Flexible Coupling	537625
	2014.04-2018.03		Front	SUV 4WD N55B30A		Flexible Coupling Kit	510596S
X4 xDrive M40d							
3.0 (240 kw)	2018.04-2020.06		Front	SUV 4WD B57D30B		Flexible Coupling	537631
	2018.04-2020.06		Front;Rear	SUV 4WD B57D30B		Flexible Coupling	517955
X4 xDrive M40i							
3.0 (260 kw)	2018.04-2019.08		Front	SUV 4WD B58B30A	Inner diameter:50mm	Flexible Coupling	510596
	2018.04-2019.08		Front	SUV 4WD B58B30A	Inner diameter:48.5mm	Flexible Coupling	537849
3.0 (265 kw)	2015.12-2018.03	AT	Front	SUV 4WD N55B30A		Propshaft	PS900161
	2015.12-2018.03		Centre	SUV 4WD N55B30A		Center Bearing Support	539921
	2015.12-2018.03		Front	SUV 4WD N55B30A	510596 and 537625 different structure	Flexible Coupling	510596
	2015.12-2018.03		Front	SUV 4WD N55B30A	537625 and 510596 different structure	Flexible Coupling	537625
	2015.12-2018.03		Front	SUV 4WD N55B30A		Flexible Coupling Kit	510596S

	YEAR	TRANSM.	FITTING POSITION	BODY STYLE & DRIVE TYPE & ENGINE	REMARKS	PRODUCT	GSP Ref.
BMW **X5**							
3.0 (135 kw)	2001.03-2003.09	AT	Front	SUV 4WD M57D306D1	for OE No.:26207508629	Propshaft	PS900149
	2001.03-2003.09	AT	Front	SUV 4WD M57D306D1	for OE No.:26207524371	Propshaft	PS900150
	2001.03-2003.09	AT	Rear	SUV 4WD M57D306D1	for OE No.:26107549305	Propshaft	PS900151
	2001.03-2003.09	AT	Rear	SUV 4WD M57D306D1	for OE No.:26107549298	Propshaft	PS900152
	2001.03-2003.09	AT/MT	Rear	SUV 4WD M57D306D1	for OE No.:26107510001	Propshaft	PS900630
	2001.03-2003.09		Centre	SUV 4WD M57D306D1		Center Bearing Support	538662
	2001.03-2003.09		Front	SUV 4WD M57D306D1	Inner diameter:50mm,510596 and 537625 different structure	Flexible Coupling	510596
	2001.03-2003.09		Front	SUV 4WD M57D306D1	Inner diameter:38.5mm	Flexible Coupling	510641
	2001.03-2003.09		Front	SUV 4WD M57D306D1	Inner diameter:50mm,537625 and 510596 different structure	Flexible Coupling	537625
	2001.03-2003.09		Front	SUV 4WD M57D306D1		Flexible Coupling Kit	510596S
	2001.03-2003.09		Front	SUV 4WD M57D306D1		Flexible Coupling Kit	537798S
3.0 (155 kw)	2003.09-2006.12	AT	Front	SUV 4WD M57D306D2	for OE No.:26207508629	Propshaft	PS900149
	2003.09-2006.12	AT	Front	SUV 4WD M57D306D2	for OE No.:26207524371	Propshaft	PS900150
	2003.09-2006.12	AT	Rear	SUV 4WD M57D306D2	for OE No.:26107549305	Propshaft	PS900151
	2003.09-2006.12	AT	Rear	SUV 4WD M57D306D2	for OE No.:26107549298	Propshaft	PS900152
	2003.09-2006.12	AT/MT	Rear	SUV 4WD M57D306D2	for OE No.:26107510001	Propshaft	PS900630
	2003.09-2006.12	AT/MT	Rear	SUV 4WD M57D306D2		Joint,propshaft	605057
	2003.09-2006.12		Front	SUV 4WD M57D306D2		Flexible Coupling	537631
	2003.09-2006.12		Front	SUV 4WD M57D306D2		Flexible Coupling Kit	537631S
	2006.12-2008.09		Front	SUV 4WD M57D306D3		Flexible Coupling	510596
3.0 (160 kw)	2003.12-2006.12	AT	Front	SUV 4WD M57D306D2	for OE No.:26207508629	Propshaft	PS900149
	2003.12-2006.12	AT	Front	SUV 4WD M57D306D2	for OE No.:26207524371	Propshaft	PS900150
	2003.12-2006.12	AT	Rear	SUV 4WD M57D306D2	for OE No.:26107549305	Propshaft	PS900151
	2003.12-2006.12	AT	Rear	SUV 4WD M57D306D2	for OE No.:26107549298	Propshaft	PS900152
	2003.12-2006.12	AT/MT	Rear	SUV 4WD M57D306D2	for OE No.:26107510001	Propshaft	PS900630
	2003.12-2006.12	AT/MT	Rear	SUV 4WD M57D306D2		Joint,propshaft	605057
	2003.12-2006.12		Centre	SUV 4WD M57D306D2		Center Bearing Support	538662
	2003.12-2006.12		Front	SUV 4WD M57D306D2	Inner diameter:38.5mm	Flexible Coupling	510641
	2003.12-2006.12		Front	SUV 4WD M57D306D2	Inner diameter:50mm	Flexible Coupling	537625
	2003.12-2006.12		Front	SUV 4WD M57D306D2	Inner diameter:48.5mm	Flexible Coupling	537631
	2003.12-2006.12		Front	SUV 4WD M57D306D2		Flexible Coupling Kit	537631S
	2003.12-2006.12		Front	SUV 4WD M57D306D2		Flexible Coupling Kit	537798S
3.0 (168 kw)	2000.06-2006.12	AT	Front	SUV 4WD M54 B30(306S3)	Date to:2003.10	Propshaft	PS900149
	2000.06-2006.12	AT	Front	SUV 4WD M54 B30(306S3)	Date from:2003.11	Propshaft	PS900150
	2000.06-2006.12	AT	Rear	SUV 4WD M54 B30(306S3)	Date from:2003.10	Propshaft	PS900152
	2000.06-2006.12	AT	Rear	SUV 4WD M54 B30(306S3)	Date from:2001.04,Date to:2003.09	Propshaft	PS900630
3.0 (170 kw)	2000.04-2006.10	AT	Front	SUV 4WD M54B306S3	Date to:2003.10	Propshaft	PS900149
	2000.04-2006.10	AT	Front	SUV 4WD M54B306S3	Date from:2003.11	Propshaft	PS900150
	2000.04-2006.10	AT	Rear	SUV 4WD M54B306S3	Date from:2003.10	Propshaft	PS900152
	2000.04-2006.10	AT	Rear	SUV 4WD M54B306S3	Date from:2001.05,Date to:2003.09	Propshaft	PS900630
	2000.04-2006.10	MT	Rear	SUV 4WD M54B306S3	Date from:2003.10	Propshaft	PS900151
	2000.04-2006.10	AT/MT	Rear	SUV 4WD M54B306S3		Joint,propshaft	605057
	2000.04-2006.10		Centre	SUV 4WD M54B306S3		Center Bearing Support	538662
	2000.04-2006.10		Front	SUV 4WD M54B306S3	Inner diameter:50mm,510596 and 537625 different structure	Flexible Coupling	510596
	2000.04-2006.10		Front	SUV 4WD M54B306S3	Inner diameter:38.5mm	Flexible Coupling	510641
	2000.04-2006.10		Front	SUV 4WD M54B306S3	Inner diameter:50mm,537625 and 510596 different structure	Flexible Coupling	537625
	2000.04-2006.10		Front	SUV 4WD M54B306S3	Inner diameter:48.5mm	Flexible Coupling	537631
	2000.04-2006.10		Front	SUV 4WD M54B306S3		Flexible Coupling Kit	510596S
	2000.04-2006.10		Front	SUV 4WD M54B306S3		Flexible Coupling Kit	537631S
	2000.04-2006.10		Front	SUV 4WD M54B306S3		Flexible Coupling Kit	537798S
3.0 (173 kw)	2007.02-2008.09	AT	Front	SUV 4WD M57D306D3		Propshaft	PS900155
	2007.02-2008.09	6AT	Rear	SUV 4WD M57D306D3		Propshaft	PS900165
	2007.02-2008.09		Centre	SUV 4WD M57D306D3		Center Bearing Support	539921
	2007.02-2008.09		Front	SUV 4WD M57D306D3	Inner diameter:50mm,510596 and 537625 different structure	Flexible Coupling	510596
	2007.02-2008.09		Front	SUV 4WD M57D306D3	Inner diameter:38.5mm	Flexible Coupling	510641
	2007.02-2008.09		Front	SUV 4WD M57D306D3	Inner diameter:50mm,537625 and 510596 different structure	Flexible Coupling	537625
	2007.02-2008.09		Front	SUV 4WD M57D306D3	Inner diameter:48.5mm	Flexible Coupling	537631
	2007.02-2008.09		Front	SUV 4WD M57D306D3	Inner diameter:50mm	Flexible Coupling Kit	510596S
	2007.02-2008.09		Front	SUV 4WD M57D306D3	Inner diameter:48.5mm	Flexible Coupling Kit	537631S
	2007.02-2008.09		Front	SUV 4WD M57D306D3	Inner diameter:38.5mm	Flexible Coupling Kit	537798S
3.0 (200 kw)	2006.10-2008.09	AT	Front	SUV 4WD N52B30A/N52B30AF/N52B30BF		Propshaft	PS900155
	2006.10-2008.09	AT	Rear	SUV 4WD N52B30A/N52B30AF/N52B30BF	for OE No.:26107564396	Propshaft	PS900165
	2006.10-2008.09	AT	Rear	SUV 4WD N52B30A/N52B30AF/N52B30BF	for OE No.:26107564394	Propshaft	PS900167
	2006.10-2008.09		Centre	SUV 4WD N52B30A/N52B30AF/N52B30BF		Center Bearing Support	539921

	YEAR	TRANSM.	FITTING POSITION	BODY STYLE & DRIVE TYPE & ENGINE	REMARKS	PRODUCT	GSP Ref.
BMW							
X5							
3.0 (200 kw)	2006.10-2008.09		Front	SUV 4WD N52B30A/N52B30AF/N52B30BF	Inner diameter:50mm,510596 and 537625 different structure	Flexible Coupling	510596
	2006.10-2008.09		Front	SUV 4WD N52B30A/N52B30AF/N52B30BF	Inner diameter:38.5mm	Flexible Coupling	510641
	2006.10-2008.09		Front	SUV 4WD N52B30A/N52B30AF/N52B30BF	Inner diameter:50mm,537625 and 510596 different structure	Flexible Coupling	537625
	2006.10-2008.09		Front	SUV 4WD N52B30A/N52B30AF/N52B30BF	Inner diameter:50mm	Flexible Coupling Kit	510596S
	2006.10-2008.09		Front	SUV 4WD N52B30A/N52B30AF/N52B30BF	Inner diameter:38.5mm	Flexible Coupling Kit	537798S
3.0 (210 kw)	2007.10-2008.09	AT	Front	SUV 4WD M57D306D5		Propshaft	PS900155
	2007.10-2008.09	6AT	Rear	SUV 4WD M57D306D5		Propshaft	PS900166
	2007.10-2008.09		Centre	SUV 4WD M57D306D5		Center Bearing Support	539921
	2007.10-2008.09		Front	SUV 4WD M57D306D5	Inner diameter:38.5mm	Flexible Coupling	510641
	2007.10-2008.09		Front	SUV 4WD M57D306D5	Inner diameter:50mm	Flexible Coupling	537625
	2007.10-2008.09		Front	SUV 4WD M57D306D5	Inner diameter:48.5mm	Flexible Coupling	537631
	2007.10-2008.09		Front	SUV 4WD M57D306D5	Inner diameter:48.5mm	Flexible Coupling Kit	537631S
	2007.10-2008.09		Front	SUV 4WD M57D306D5	Inner diameter:38.5mm	Flexible Coupling Kit	537798S
4.4 (210 kw)	2000.01-2003.09	AT	Front	SUV 4WD M62B448S2		Propshaft	PS900149
	2000.01-2003.09	AT	Rear	SUV 4WD M62B448S2	for OE No.:26107549305	Propshaft	PS900151
	2000.01-2003.09	AT	Rear	SUV 4WD M62B448S2	Date from:2001.02;for OE No.:26107510001	Propshaft	PS900630
	2000.01-2003.09	AT/MT	Rear	SUV 4WD M62B448S2		Joint,propshaft	605057
	2000.01-2003.09		Centre	SUV 4WD M62B448S2		Center Bearing Support	538662
	2000.01-2003.09		Front	SUV 4WD M62B448S2	Inner diameter:50mm,510596 and 537625 different structure	Flexible Coupling	510596
	2000.01-2003.09		Front	SUV 4WD M62B448S2	Inner diameter:38.5mm	Flexible Coupling	510641
	2000.01-2003.09		Front	SUV 4WD M62B448S2	Inner diameter:50mm,537625 and 510596 different structure	Flexible Coupling	537625
	2000.01-2003.09		Front	SUV 4WD M62B448S2	Inner diameter:48.5mm	Flexible Coupling	537631
	2000.01-2003.09		Front	SUV 4WD M62B448S2		Flexible Coupling Kit	510596S
	2000.01-2003.09		Front	SUV 4WD M62B448S2		Flexible Coupling Kit	537798S
4.4 (235 kw)	2003.10-2006.10	AT	Front	SUV 4WD N62B44A		Propshaft	PS900150
	2003.10-2006.10	AT	Rear	SUV 4WD N62B44A	With High speed synchronisation	Propshaft	PS900151
	2003.10-2006.10	AT	Rear	SUV 4WD N62B44A	Without High speed synchronisation	Propshaft	PS900152
	2003.10-2006.10	AT/MT	Rear	SUV 4WD N62B44A		Joint,propshaft	605057
	2003.10-2006.10		Centre	SUV 4WD N62B44A		Center Bearing Support	538662
	2003.10-2006.10		Front	SUV 4WD N62B44A	Inner diameter:38.5mm	Flexible Coupling	510641
	2003.10-2006.10		Front	SUV 4WD N62B44A	Inner diameter:50mm	Flexible Coupling	537625
	2003.10-2006.10		Front	SUV 4WD N62B44A	Inner diameter:48.5mm	Flexible Coupling	537631
	2003.10-2006.10		Front	SUV 4WD N62B44A		Flexible Coupling Kit	537631S
	2003.10-2006.10		Front	SUV 4WD N62B44A		Flexible Coupling Kit	537798S
4.6 (255 kw)	2001.10-2003.09	AT	Front	SUV 4WD M62B468S1		Propshaft	PS900149
	2001.10-2003.09	AT	Rear	SUV 4WD M62B468S1		Propshaft	PS900630
	2001.10-2003.09	AT/MT	Rear	SUV 4WD M62B468S1		Joint,propshaft	605057
	2001.10-2003.09		Centre	SUV 4WD M62B468S1		Center Bearing Support	538662
	2001.10-2003.09		Front	SUV 4WD M62B468S1	Inner diameter:50mm,510596 and 537625 different structure	Flexible Coupling	510596
	2001.10-2003.09		Front	SUV 4WD M62B468S1	Inner diameter:38.5mm	Flexible Coupling	510641
	2001.10-2003.09		Front	SUV 4WD M62B468S1	Inner diameter:50mm,537625 and 510596 different structure	Flexible Coupling	537625
	2001.10-2003.09		Front	SUV 4WD M62B468S1		Flexible Coupling Kit	510596S
	2001.10-2003.09		Front	SUV 4WD M62B468S1		Flexible Coupling Kit	537798S
4.8 (261 kw)	2006.10-2008.09		Centre	SUV 4WD N62B48B		Center Bearing Support	539921
	2006.10-2008.09		Front	SUV 4WD N62B48B	Inner diameter:50mm,510596 and 537625 different structure	Flexible Coupling	510596
	2006.10-2008.09		Front	SUV 4WD N62B48B	Inner diameter:50mm,537625 and 510596 different structure	Flexible Coupling	537625
	2006.10-2008.09		Front	SUV 4WD N62B48B	Inner diameter:48.5mm	Flexible Coupling	537631
	2006.10-2008.09		Front	SUV 4WD N62B48B		Flexible Coupling Kit	510596S
	2006.10-2008.09		Front	SUV 4WD N62B48B		Flexible Coupling Kit	537631S
4.8 (265 kw)	2004.04-2006.09	AT	Front	SUV 4WD N62B48A		Propshaft	PS900150
	2004.04-2006.09	6AT	Rear	SUV 4WD N62B48A		Propshaft	PS900151
	2004.04-2006.09	AT/MT	Rear	SUV 4WD N62B48A		Joint,propshaft	605057
	2004.04-2006.09		Centre	SUV 4WD N62B48A		Center Bearing Support	538662
	2004.04-2006.09		Front	SUV 4WD N62B48A	Inner diameter:38.5mm	Flexible Coupling	510641
	2004.04-2006.09		Front	SUV 4WD N62B48A	Inner diameter:50mm	Flexible Coupling	537625
	2004.04-2006.09		Front	SUV 4WD N62B48A	Inner diameter:48.5mm	Flexible Coupling	537631
	2004.04-2006.09		Front	SUV 4WD N62B48A		Flexible Coupling Kit	537631S
	2004.04-2006.09		Front	SUV 4WD N62B48A		Flexible Coupling Kit	537798S
X5 M							
4.4 (408 kw)	2009.07-2013.07	6AT	Front	SUV 4WD S63B44A	Model year to:2010	Propshaft	PS900158
	2009.07-2013.07	6AT	Front	SUV 4WD S63B44A	Model year from:2011	Propshaft	PS900159
	2009.07-2013.07		Centre	SUV 4WD S63B44A		Center Bearing Support	539921
	2009.07-2013.07		Front	SUV 4WD S63B44A		Flexible Coupling	537631
	2009.07-2013.07		Front;Rear	SUV 4WD S63B44A		Flexible Coupling	517955

	YEAR	TRANSM.	FITTING POSITION	BODY STYLE & DRIVE TYPE & ENGINE	REMARKS	PRODUCT	GSP Ref.
BMW							
X5 M							
4.4 (408 kw)	2009.07-2013.07		Front;Rear	SUV 4WD S63B44A		Flexible Coupling Kit	517955S
4.4 (414 kw)	2009.09-2013.06	AT	Front	SUV 4WD S63 B44 A	Date to:2010.04;for OE No.:26207556020	Propshaft	PS900158
	2009.09-2013.06	AT	Front	SUV 4WD S63 B44 A	for OE No.:26208605866	Propshaft	PS900159
4.4 (423 kw)	2014.12-2018.07	AT	Front	SUV 4WD S63B44B		Propshaft	PS900159
	2014.12-2018.07	8AT	Rear	SUV 4WD S63B44B		Propshaft	PS901414
X5 sDrive 25d							
2.0 (155 kw)	2013.12-2018.07		Centre	SUV RWD B47D20B/N47D20D		Center Bearing Support	538646
	2013.12-2018.07		Front;Rear	SUV RWD B47D20B/N47D20D		Flexible Coupling	517955
	2013.12-2018.07		Front;Rear	SUV RWD B47D20B/N47D20D		Flexible Coupling Kit	517955S
2.0 (160 kw)	2013.12-2015.07		Centre	SUV RWD N47D20D		Center Bearing Support	538646
	2013.12-2015.07		Front;Rear	SUV RWD N47D20D		Flexible Coupling	517955
	2013.12-2015.07		Front;Rear	SUV RWD N47D20D		Flexible Coupling Kit	517955S
2.0 (170 kw)	2015.08-2018.07		Front;Rear	SUV RWD B47D20B		Flexible Coupling	517955
	2015.08-2018.07		Front;Rear	SUV RWD B47D20B		Flexible Coupling Kit	517955S
X5 xDrive 25d							
2.0 (155 kw)	2013.12-2015.07	AT	Front	SUV 4WD N47D20D		Propshaft	PS900159
	2013.12-2015.07	8AT	Rear	SUV 4WD N47D20D		Propshaft	PS900160
	2013.12-2015.07	8AT	-	SUV 4WD N47D20D		Joint,propshaft	802222
	2013.12-2015.07		Centre	SUV 4WD N47D20D		Center Bearing Support	539921
	2013.12-2015.07		Front	SUV 4WD N47D20D	510596 and 537625 different structure	Flexible Coupling	510596
	2013.12-2015.07		Front	SUV 4WD N47D20D	537625 and 510596 different structure	Flexible Coupling	537625
	2013.12-2015.07		Front	SUV 4WD N47D20D		Flexible Coupling Kit	510596S
	2019.08-2023.03		Front	SUV 4WD B47D20B		Flexible Coupling	510596
2.0 (160 kw)	2013.12-2015.07	AT	Front	SUV 4WD N47D20D		Propshaft	PS900159
	2013.12-2015.07	8AT	Rear	SUV 4WD N47D20D		Propshaft	PS900160
	2013.12-2015.07	8AT	-	SUV 4WD N47D20D		Joint,propshaft	802222
	2013.12-2015.07		Centre	SUV 4WD N47D20D		Center Bearing Support	539921
	2013.12-2015.07		Front	SUV 4WD N47D20D	510596 and 537625 different structure	Flexible Coupling	510596
	2013.12-2015.07		Front	SUV 4WD N47D20D	537625 and 510596 different structure	Flexible Coupling	537625
	2013.12-2015.07		Front	SUV 4WD N47D20D		Flexible Coupling Kit	510596S
2.0 (170 kw)	2015.08-2018.07	AT	Front	SUV 4WD B47D20B		Propshaft	PS900159
	2015.08-2018.07	8AT	Rear	SUV 4WD B47D20B		Propshaft	PS900160
	2015.08-2018.07	8AT	-	SUV 4WD B47D20B		Joint,propshaft	802222
	2015.08-2018.07		Centre	SUV 4WD B47D20B		Center Bearing Support	539921
	2015.08-2018.07		Front	SUV 4WD B47D20B	510596 and 537625 different structure	Flexible Coupling	510596
	2015.08-2018.07		Front	SUV 4WD B47D20B	537625 and 510596 different structure	Flexible Coupling	537625
	2015.08-2018.07		Front	SUV 4WD B47D20B		Flexible Coupling Kit	510596S
	2019.08-2023.03		Centre	SUV 4WD B47D20B		Center Bearing Support	538656
	2019.08-2023.03		Front	SUV 4WD B47D20B		Flexible Coupling	510596
3.0 (160 kw)	2015.06-2018.07		Front	SUV 4WD N57D30A		Flexible Coupling	537625
	2015.06-2018.07		Front	SUV 4WD N57D30A		Flexible Coupling Kit	510596S
X5 xDrive 28i							
2.0 (180 kw)	2015.06-2018.07	AT	Front	SUV 4WD N20B20A		Propshaft	PS901463
	2015.06-2018.07		Centre	SUV 4WD N20B20A		Center Bearing Support	539921
	2015.06-2018.07		Front	SUV 4WD N20B20A		Flexible Coupling	510596
X5 xDrive 30d							
3.0 (155 kw)	2008.10-2013.07	8AT	Rear	SUV 4WD M57D306D3/N57D30A		Propshaft	PS900168
	2008.10-2013.07		Centre	SUV 4WD M57D306D3/N57D30A		Center Bearing Support	539921
	2008.10-2013.07		Front	SUV 4WD M57D306D3/N57D30A	510596 and 537625 different structure	Flexible Coupling	510596
	2008.10-2013.07		Front	SUV 4WD M57D306D3/N57D30A	537625 and 510596 different structure	Flexible Coupling	537625
	2008.10-2013.07		Front	SUV 4WD M57D306D3/N57D30A		Flexible Coupling Kit	510596S
3.0 (173 kw)	2008.10-2010.03		Centre	SUV 4WD M57D306D3		Center Bearing Support	539921
	2008.10-2010.03		Front	SUV 4WD M57D306D3	Inner diameter:50mm,510596 and 537625 different structure	Flexible Coupling	510596
	2008.10-2010.03		Front	SUV 4WD M57D306D3	Inner diameter:38.5mm	Flexible Coupling	510641
	2008.10-2010.03		Front	SUV 4WD M57D306D3	Inner diameter:50mm;537625 and 510596 different structure	Flexible Coupling	537625
	2008.10-2010.03		Front	SUV 4WD M57D306D3	Inner diameter:50mm	Flexible Coupling Kit	510596S
	2008.10-2010.03		Front	SUV 4WD M57D306D3	Inner diameter:38.5mm	Flexible Coupling Kit	537798S
3.0 (180 kw)	2010.04-2013.07	AT	Front	SUV 4WD N57D30A		Propshaft	PS900159
	2010.04-2013.07	8AT	Rear	SUV 4WD N57D30A	Without Increased towing capability	Propshaft	PS900160
	2010.04-2013.07	8AT	Rear	SUV 4WD N57D30A	With Increased towing capability	Propshaft	PS900168
	2010.04-2013.07	8AT	-	SUV 4WD N57D30A	Without Increased towing capability	Joint,propshaft	802222
	2010.04-2013.07		Centre	SUV 4WD N57D30A		Center Bearing Support	539921
	2010.04-2013.07		Front	SUV 4WD N57D30A	Inner diameter:50mm,510596 and 537625 different structure	Flexible Coupling	510596
	2010.04-2013.07		Front	SUV 4WD N57D30A	Inner diameter:50mm,537625 and 510596 different structure	Flexible Coupling	537625

	YEAR	TRANSM.	FITTING POSITION	BODY STYLE & DRIVE TYPE & ENGINE	REMARKS	PRODUCT	GSP Ref.
BMW							
X5 xDrive 30d							
3.0 (180 kw)	2010.04-2013.07		Front	SUV 4WD N57D30A	Inner diameter:48.5mm	Flexible Coupling	537631
	2010.04-2013.07		Front	SUV 4WD N57D30A		Flexible Coupling Kit	510596S
3.0 (183 kw)	2013.12-2018.07	AT	Front	SUV 4WD N57D30A		Propshaft	PS900159
	2013.12-2018.07	8AT	Rear	SUV 4WD N57D30A	for OE No.:26107589128	Propshaft	PS900160
	2013.12-2018.07	8AT	Rear	SUV 4WD N57D30A	for OE No.:26107589129	Propshaft	PS900168
	2013.12-2018.07	8AT	-	SUV 4WD N57D30A		Joint,propshaft	802222
	2013.12-2018.07		Centre	SUV 4WD N57D30A		Center Bearing Support	539921
	2013.12-2018.07		Front	SUV 4WD N57D30A	510596 and 537625 different structure	Flexible Coupling	510596
	2013.12-2018.07		Front	SUV 4WD N57D30A	537625 and 510596 different structure	Flexible Coupling	537625
	2013.12-2018.07		Front	SUV 4WD N57D30A		Flexible Coupling Kit	510596S
	2018.08-2020.07		Front;Rear	SUV 4WD B57D30A		Flexible Coupling	517955
3.0 (190 kw)	2013.08-2018.07	AT	Front	SUV 4WD N57D30A		Propshaft	PS900159
	2013.08-2018.07	8AT	Rear	SUV 4WD N57D30A	for OE No.:26107589128	Propshaft	PS900160
	2013.08-2018.07	8AT	Rear	SUV 4WD N57D30A	for OE No.:26107589129	Propshaft	PS900168
	2013.08-2018.07	8AT	-	SUV 4WD N57D30A		Joint,propshaft	802222
	2013.08-2018.07		Centre	SUV 4WD N57D30A		Center Bearing Support	539921
	2013.08-2018.07		Front	SUV 4WD N57D30A	Inner diameter:50mm,510596 and 537625 different structure	Flexible Coupling	510596
	2013.08-2018.07		Front	SUV 4WD N57D30A	Inner diameter:50mm,537625 and 510596 different structure	Flexible Coupling	537625
	2013.08-2018.07		Front	SUV 4WD N57D30A	Inner diameter:48.5mm	Flexible Coupling	537631
	2013.08-2018.07		Front	SUV 4WD N57D30A		Flexible Coupling Kit	510596S
3.0 (195 kw)	2018.08-2020.07		Front;Rear	SUV 4WD B57D30A		Flexible Coupling	517955
3.0 (204 kw)	2013.08-2018.07	AT	Front	SUV 4WD N57D30A		Propshaft	PS900159
	2013.08-2018.07	8AT	Rear	SUV 4WD N57D30A	for OE No.:26107589128	Propshaft	PS900160
	2013.08-2018.07	8AT	Rear	SUV 4WD N57D30A	for OE No.:26107589129	Propshaft	PS900168
	2013.08-2018.07	8AT	-	SUV 4WD N57D30A		Joint,propshaft	802222
	2013.08-2018.07		Centre	SUV 4WD N57D30A		Center Bearing Support	539921
	2013.08-2018.07		Front	SUV 4WD N57D30A	510596 and 537625 different structure	Flexible Coupling	510596
	2013.08-2018.07		Front	SUV 4WD N57D30A	537625 and 510596 different structure	Flexible Coupling	537625
	2013.08-2018.07		Front	SUV 4WD N57D30A		Flexible Coupling Kit	510596S
3.0 (210 kw)	2013.08-2018.07	AT	Front	SUV 4WD N57D30A		Propshaft	PS900159
	2013.08-2018.07	8AT	Rear	SUV 4WD N57D30A	for OE No.:26107589128	Propshaft	PS900160
	2013.08-2018.07	8AT	Rear	SUV 4WD N57D30A	for OE No.:26107589129	Propshaft	PS900168
	2013.08-2018.07	8AT	-	SUV 4WD N57D30A		Joint,propshaft	802222
	2013.08-2018.07		Centre	SUV 4WD N57D30A		Center Bearing Support	539921
	2013.08-2018.07		Front	SUV 4WD N57D30A	510596 and 537625 different structure	Flexible Coupling	510596
	2013.08-2018.07		Front	SUV 4WD N57D30A	537625 and 510596 different structure	Flexible Coupling	537625
	2013.08-2018.07		Front	SUV 4WD N57D30A		Flexible Coupling Kit	510596S
	2020.08-		Front;Rear	SUV 4WD B57D30B		Flexible Coupling	517955
X5 xDrive 30i							
3.0 (200 kw)	2008.10-2010.03		Centre	SUV 4WD N52B30A		Center Bearing Support	539921
	2008.10-2010.03		Front	SUV 4WD N52B30A	Inner diameter:50mm	Flexible Coupling	510596
	2008.10-2010.03		Front	SUV 4WD N52B30A	Inner diameter:38.5mm	Flexible Coupling	510641
	2008.10-2010.03		Front	SUV 4WD N52B30A		Flexible Coupling Kit	537798S
X5 xDrive 35d							
3.0 (210 kw)	2008.10-2010.03	AT	Front	SUV 4WD M57D306D5		Propshaft	PS900159
	2008.10-2010.03	6AT	Rear	SUV 4WD M57D306D5		Propshaft	PS900166
	2008.10-2010.03		Centre	SUV 4WD M57D306D5		Center Bearing Support	539921
	2008.10-2010.03		Front	SUV 4WD M57D306D5		Flexible Coupling	510641
	2008.10-2010.03		Front	SUV 4WD M57D306D5		Flexible Coupling Kit	537798S
X5 xDrive 35i							
3.0 (225 kw)	2010.04-2013.07	AT	Front	SUV 4WD N55B30A		Propshaft	PS900159
	2010.04-2013.07	8AT	Rear	SUV 4WD N55B30A	for OE No.:26107589128	Propshaft	PS900160
	2010.04-2013.07	8AT	Rear	SUV 4WD N55B30A	for OE No.:26107589129	Propshaft	PS900168
	2010.04-2013.07	8AT	-	SUV 4WD N55B30A		Joint,propshaft	802222
	2010.04-2013.07		Centre	SUV 4WD N55B30A		Center Bearing Support	539921
	2010.04-2013.07		Front	SUV 4WD N55B30A	Inner diameter:50mm,510596 and 537625 different structure	Flexible Coupling	510596
	2010.04-2013.07		Front	SUV 4WD N55B30A	Inner diameter:50mm,537625 and 510596 different structure	Flexible Coupling	537625
	2010.04-2013.07		Front	SUV 4WD N55B30A	Inner diameter:48.5mm	Flexible Coupling	537631
	2010.04-2013.07		Front	SUV 4WD N55B30A		Flexible Coupling Kit	510596S
	2013.12-2018.07	AT	Front	SUV 4WD N55B30A		Propshaft	PS900159
	2013.12-2018.07	8AT	Rear	SUV 4WD N55B30A	for OE No.:26107589128	Propshaft	PS900160
	2013.12-2018.07	8AT	Rear	SUV 4WD N55B30A	for OE No.:26107589129	Propshaft	PS900168
	2013.12-2018.07	8AT	-	SUV 4WD N55B30A		Joint,propshaft	802222
	2013.12-2018.07		Centre	SUV 4WD N55B30A		Center Bearing Support	539921

	YEAR	TRANSM.	FITTING POSITION	BODY STYLE & DRIVE TYPE & ENGINE	REMARKS	PRODUCT	GSP Ref.
BMW							
X5 xDrive 35i							
3.0 (225 kw)	2013.12-2018.07		Front	SUV 4WD N55B30A	Inner diameter:50mm,510596 and 537625 different structure	Flexible Coupling	510596
	2013.12-2018.07		Front	SUV 4WD N55B30A	Inner diameter:50mm,537625 and 510596 different structure	Flexible Coupling	537625
	2013.12-2018.07		Front	SUV 4WD N55B30A	Inner diameter:48.5mm	Flexible Coupling	537631
	2013.12-2018.07		Front	SUV 4WD N55B30A		Flexible Coupling Kit	510596S
3.0 (235 kw)	2012.02-2013.06	AT	Front	SUV 4WD N55B30A		Propshaft	PS900159
	2012.02-2013.06	8AT	Rear	SUV 4WD N55B30A	for OE No.:26107589128	Propshaft	PS900160
	2012.02-2013.06	8AT	Rear	SUV 4WD N55B30A	for OE No.:26107589129	Propshaft	PS900168
	2012.02-2013.06	8AT	-	SUV 4WD N55B30A		Joint,propshaft	802222
	2012.02-2013.06		Centre	SUV 4WD N55B30A		Center Bearing Support	539921
	2012.02-2013.06		Front	SUV 4WD N55B30A	510596 and 537625 different structure	Flexible Coupling	510596
	2012.02-2013.06		Front	SUV 4WD N55B30A	537625 and 510596 different structure	Flexible Coupling	537625
	2012.02-2013.06		Front	SUV 4WD N55B30A		Flexible Coupling Kit	510596S
3.0 (240 kw)	2013.12-2018.07	AT	Front	SUV 4WD N55B30A		Propshaft	PS900159
	2013.12-2018.07	8AT	Rear	SUV 4WD N55B30A	for OE No.:26107589128	Propshaft	PS900160
	2013.12-2018.07	8AT	Rear	SUV 4WD N55B30A	for OE No.:26107589129	Propshaft	PS900168
	2013.12-2018.07	8AT	-	SUV 4WD N55B30A		Joint,propshaft	802222
	2013.12-2018.07		Centre	SUV 4WD N55B30A		Center Bearing Support	539921
	2013.12-2018.07		Front	SUV 4WD N55B30A	510596 and 537625 different structure	Flexible Coupling	510596
	2013.12-2018.07		Front	SUV 4WD N55B30A	537625 and 510596 different structure	Flexible Coupling	537625
	2013.12-2018.07		Front	SUV 4WD N55B30A		Flexible Coupling Kit	510596S
X5 xDrive 40d							
3.0 (225 kw)	2010.04-2013.10	AT	Front	SUV 4WD N57D30B		Propshaft	PS900159
	2010.04-2013.10	8AT	Rear	SUV 4WD N57D30B		Propshaft	PS900168
	2010.04-2013.10		Centre	SUV 4WD N57D30B		Center Bearing Support	539921
	2010.04-2013.10		Front	SUV 4WD N57D30B		Flexible Coupling	537631
3.0 (230 kw)	2013.12-2018.07	AT	Front	SUV 4WD N57D30B		Propshaft	PS900159
	2013.12-2018.07	8AT	Rear	SUV 4WD N57D30B		Propshaft	PS900168
	2013.12-2018.07		Centre	SUV 4WD N57D30B		Center Bearing Support	539921
	2013.12-2018.07		Front	SUV 4WD N57D30B		Flexible Coupling	537631
X5 xDrive 40e							
2.0 (205 kw)	2015.08-2018.07		Centre	SUV 4WD N20B20A		Center Bearing Support	539921
	2015.08-2018.07		Front	SUV 4WD N20B20A		Flexible Coupling	510596
2.0 (230 kw)	2015.08-2018.07		Centre	SUV 4WD N20B20A		Center Bearing Support	539921
	2015.08-2018.07		Front	SUV 4WD N20B20A		Flexible Coupling	510596
X5 xDrive 40i							
3.0 (225 kw)	2012.01-2013.12	AT	Front	SUV 4WD N55B30A		Propshaft	PS900159
	2012.01-2013.12	8AT	Rear	SUV 4WD N55B30A	for OE No.:26107589128	Propshaft	PS900160
	2012.01-2013.12	8AT	Rear	SUV 4WD N55B30A	for OE No.:26107589129	Propshaft	PS900168
	2012.01-2013.12	8AT	-	SUV 4WD N55B30A		Joint,propshaft	802222
	2012.01-2013.12		Centre	SUV 4WD N55B30A		Center Bearing Support	539921
	2012.01-2013.12		Front	SUV 4WD N55B30A		Flexible Coupling	537625
	2012.01-2013.12		Front	SUV 4WD N55B30A		Flexible Coupling Kit	510596S
3.0 (250 kw)	2018.08-2023.03		Front	SUV 4WD B58B30C		Flexible Coupling	510596
X5 xDrive 45e							
3.0 (235 kw)	2019.06-2023.03		Front;Rear	SUV 4WD B58B30C		Flexible Coupling	517955
X5 xDrive 48i							
4.8 (261 kw)	2008.10-2010.03		Centre	SUV 4WD N62B48B		Center Bearing Support	539921
	2008.10-2010.03		Front	SUV 4WD N62B48B		Flexible Coupling	510596
X5 xDrive 50i							
4.0 (300 kw)	2013.08-2018.07	AT	Front	SUV 4WD N63 B40 A		Propshaft	PS900159
	2013.08-2018.07	8AT	Rear	SUV 4WD N63 B40 A		Propshaft	PS900168
4.4 (300 kw)	2010.04-2013.07	AT	Front	SUV 4WD N63B44A		Propshaft	PS900159
	2010.04-2013.07	8AT	Rear	SUV 4WD N63B44A		Propshaft	PS900168
	2010.04-2013.07		Centre	SUV 4WD N63B44A		Center Bearing Support	539921
	2010.04-2013.07		Front	SUV 4WD N63B44A		Flexible Coupling	537631
4.4 (330 kw)	2013.08-2018.07	AT	Front	SUV 4WD N63B44B		Propshaft	PS900159
	2013.08-2018.07	8AT	Rear	SUV 4WD N63B44B		Propshaft	PS900168
	2013.08-2018.07		Centre	SUV 4WD N63B44B		Center Bearing Support	539921
	2013.08-2018.07		Front	SUV 4WD N63B44B		Flexible Coupling	510596
X5 xDrive M50d							
3.0 (280 kw)	2012.06-2013.10		Centre	SUV 4WD N57D30C		Center Bearing Support	539921
	2012.06-2013.10		Front	SUV 4WD N57D30C		Flexible Coupling	537631
	2012.06-2013.10		Front;Rear	SUV 4WD N57D30C		Flexible Coupling	517955
	2012.06-2013.10		Front;Rear	SUV 4WD N57D30C		Flexible Coupling Kit	517955S

	YEAR	TRANSM.	FITTING POSITION	BODY STYLE & DRIVE TYPE & ENGINE	REMARKS	PRODUCT	GSP Ref.
BMW							
X5 xDrive M50d							
3.0 (280 kw)	2013.12-2018.07	AT	Front	SUV 4WD N57D30C		Propshaft	PS900159
	2013.12-2018.07		Centre	SUV 4WD N57D30C		Center Bearing Support	539921
	2013.12-2018.07		Front	SUV 4WD N57D30C		Flexible Coupling	537631
	2013.12-2018.07		Front;Rear	SUV 4WD N57D30C		Flexible Coupling	517955
	2013.12-2018.07		Front;Rear	SUV 4WD N57D30C		Flexible Coupling Kit	517955S
3.0 (294 kw)	2018.08-2023.03		Front;Rear	SUV 4WD B57D30C		Flexible Coupling	517955
X5 xDrive M50i							
4.4 (390 kw)	2019.08-2023.03		Centre	SUV 4WD N63B44D		Center Bearing Support	538655
	2019.08-2023.03		Front;Rear	SUV 4WD N63B44D		Flexible Coupling	517955
X6 ActiveHybrid							
4.4 (357 kw)	2009.01-2014.06	AT	Front	SUV 4WD N63B44A	Date to:2010.04	Propshaft	PS900158
	2009.01-2014.06	AT	Front	SUV 4WD N63B44A	Date from:2010.05	Propshaft	PS900159
	2009.01-2014.06	AT	Rear	SUV 4WD N63B44A		Propshaft	PS900166
	2009.01-2014.06		Centre	SUV 4WD N63B44A		Center Bearing Support	539921
	2009.01-2014.06		Front	SUV 4WD N63B44A		Flexible Coupling	537631
	2009.01-2014.06		Front	SUV 4WD N63B44A		Flexible Coupling Kit	537631S
X6 M							
4.4 (408 kw)	2009.07-2014.07	AT	Front	SUV 4WD S63B44A		Propshaft	PS900159
	2009.07-2014.07		Centre	SUV 4WD S63B44A		Center Bearing Support	539921
	2009.07-2014.07		Front	SUV 4WD S63B44A		Flexible Coupling	537631
	2009.07-2014.07		Front;Rear	SUV 4WD S63B44A		Flexible Coupling	517955
	2009.07-2014.07		Front;Rear	SUV 4WD S63B44A		Flexible Coupling Kit	517955S
4.4 (423 kw)	2014.12-2019.07	AT	Rear	SUV 4WD S63B44B		Propshaft	PS901414
	2014.12-2019.07		Centre	SUV 4WD S63B44B		Center Bearing Support	539921
X6 xDrive 30d							
3.0 (155 kw)	2010.04-2014.07	AT	Front	SUV 4WD N57D30A		Propshaft	PS900159
	2010.04-2014.07	AT	Rear	SUV 4WD N57D30A		Propshaft	PS900168
	2010.04-2014.07		Centre	SUV 4WD N57D30A		Center Bearing Support	539921
	2010.04-2014.07		Front	SUV 4WD N57D30A		Flexible Coupling	510596
	2014.08-2019.07	AT	Front	SUV 4WD N57D30A	Model year to:2018	Propshaft	PS900159
	2014.08-2019.07	AT	Rear	SUV 4WD N57D30A	for OE No.:26107589128	Propshaft	PS900160
	2014.08-2019.07	AT	Rear	SUV 4WD N57D30A	for OE No.:26107589129	Propshaft	PS900168
	2014.08-2019.07	AT	-	SUV 4WD N57D30A		Joint,propshaft	802222
	2014.08-2019.07		Centre	SUV 4WD N57D30A		Center Bearing Support	539921
	2014.08-2019.07		Front	SUV 4WD N57D30A	510596 and 537625 different structure	Flexible Coupling	510596
	2014.08-2019.07		Front	SUV 4WD N57D30A	537625 and 510596 different structure	Flexible Coupling	537625
	2014.08-2019.07		Front	SUV 4WD N57D30A		Flexible Coupling Kit	510596S
	2019.08-2020.07		Front;Rear	SUV 4WD B57D30A		Flexible Coupling	517955
3.0 (173 kw)	2008.04-2010.03	AT	Front	SUV 4WD M57D306D3		Propshaft	PS900155
	2008.04-2010.03	AT	Rear	SUV 4WD M57D306D3		Propshaft	PS900166
	2008.04-2010.03		Centre	SUV 4WD M57D306D3		Center Bearing Support	539921
	2008.04-2010.03		Front	SUV 4WD M57D306D3	Inner diameter:38.5mm	Flexible Coupling	510641
	2008.04-2010.03		Front	SUV 4WD M57D306D3	Inner diameter:50mm	Flexible Coupling	537625
	2008.04-2010.03		Front	SUV 4WD M57D306D3	Inner diameter:48.5mm	Flexible Coupling	537631
	2008.04-2010.03		Front	SUV 4WD M57D306D3	Inner diameter:48.5mm	Flexible Coupling Kit	537631S
	2008.04-2010.03		Front	SUV 4WD M57D306D3	Inner diameter:38.5mm	Flexible Coupling Kit	537798S
3.0 (180 kw)	2010.04-2014.06	AT	Front	SUV 4WD N57D30A		Propshaft	PS900159
	2010.04-2014.06	AT	Rear	SUV 4WD N57D30A		Propshaft	PS900168
	2010.04-2014.06		Centre	SUV 4WD N57D30A		Center Bearing Support	539921
	2010.04-2014.06		Front	SUV 4WD N57D30A		Flexible Coupling	537631
3.0 (183 kw)	2014.12-2019.07	AT	Front	SUV 4WD N57D30A	Model year to:2018	Propshaft	PS900159
	2014.12-2019.07	AT	Rear	SUV 4WD N57D30A	for OE No.:26107589128	Propshaft	PS900160
	2014.12-2019.07	AT	Rear	SUV 4WD N57D30A	for OE No.:26107589129	Propshaft	PS900168
	2014.12-2019.07	AT	-	SUV 4WD N57D30A		Joint,propshaft	802222
	2014.12-2019.07		Centre	SUV 4WD N57D30A		Center Bearing Support	539921
	2014.12-2019.07		Front	SUV 4WD N57D30A	510596 and 537625 different structure	Flexible Coupling	510596
	2014.12-2019.07		Front	SUV 4WD N57D30A	537625 and 510596 different structure	Flexible Coupling	537625
	2014.12-2019.07		Front	SUV 4WD N57D30A		Flexible Coupling Kit	510596S
	2019.08-2020.07		Front;Rear	SUV 4WD B57D30A		Flexible Coupling	517955
3.0 (190 kw)	2014.08-2019.07	AT	Front	SUV 4WD N57D30A	Model year to:2018	Propshaft	PS900159
	2014.08-2019.07	AT	Rear	SUV 4WD N57D30A	for OE No.:26107589128	Propshaft	PS900160
	2014.08-2019.07	AT	Rear	SUV 4WD N57D30A	for OE No.:26107589129	Propshaft	PS900168
	2014.08-2019.07	AT	-	SUV 4WD N57D30A		Joint,propshaft	802222
	2014.08-2019.07		Centre	SUV 4WD N57D30A		Center Bearing Support	539921

	YEAR	TRANSM.	FITTING POSITION	BODY STYLE & DRIVE TYPE & ENGINE	REMARKS	PRODUCT	GSP Ref.
BMW							
X6 xDrive 30d							
3.0 (190 kw)	2014.08-2019.07		Front	SUV 4WD N57D30A		Flexible Coupling	510596
	2014.08-2019.07		Front	SUV 4WD N57D30A		Flexible Coupling	537631
3.0 (195 kw)	2019.08-2020.07		Front;Rear	SUV 4WD B57D30A		Flexible Coupling	517955
3.0 (204 kw)	2014.08-2019.07	AT	Front	SUV 4WD N57D30A	Model year to:2018	Propshaft	PS900159
	2014.08-2019.07	AT	Rear	SUV 4WD N57D30A	for OE No.:26107589128	Propshaft	PS900160
	2014.08-2019.07	AT	Rear	SUV 4WD N57D30A	for OE No.:26107589129	Propshaft	PS900168
	2014.08-2019.07	AT	-	SUV 4WD N57D30A		Joint,propshaft	802222
	2014.08-2019.07		Centre	SUV 4WD N57D30A		Center Bearing Support	539921
	2014.08-2019.07		Front	SUV 4WD N57D30A	510596 and 537625 different structure	Flexible Coupling	510596
	2014.08-2019.07		Front	SUV 4WD N57D30A	537625 and 510596 different structure	Flexible Coupling	537625
	2014.08-2019.07		Front	SUV 4WD N57D30A		Flexible Coupling Kit	510596S
3.0 (210 kw)	2020.08-2023.03		Front;Rear	SUV 4WD B57D30B		Flexible Coupling	517955
X6 xDrive 35d							
3.0 (210 kw)	2008.01-2010.03	AT	Front	SUV 4WD M57D306D5		Propshaft	PS900155
	2008.01-2010.03	AT	Rear	SUV 4WD M57D306D5		Propshaft	PS900166
	2008.01-2010.03		Centre	SUV 4WD M57D306D5		Center Bearing Support	539921
	2008.01-2010.03		Front	SUV 4WD M57D306D5	for one-piece propshaft	Flexible Coupling	510641
	2008.01-2010.03		Front	SUV 4WD M57D306D5	for two-piece propshaft	Flexible Coupling	537625
	2008.01-2010.03		Front	SUV 4WD M57D306D5	for two-piece propshaft	Flexible Coupling Kit	537631S
	2008.01-2010.03		Front	SUV 4WD M57D306D5	for one-piece propshaft	Flexible Coupling Kit	537798S
X6 xDrive 35i							
3.0 (224 kw)	2008.01-2014.06	AT	Front	SUV 4WD N54B30A/N55B30A	for OE No.:26207556019	Propshaft	PS900155
	2008.01-2014.06	AT	Front	SUV 4WD N54B30A/N55B30A	Date from:2010.04;for OE No.:26208605866	Propshaft	PS900159
	2008.01-2014.06	AT	Rear	SUV 4WD N54B30A/N55B30A	for OE No.:26107564398	Propshaft	PS900166
	2008.01-2014.06	AT	Rear	SUV 4WD N54B30A/N55B30A	Date from:2010.04;for OE No.:26107589129	Propshaft	PS900168
3.0 (225 kw)	2008.01-2014.07	AT	Front	SUV 4WD N54B30A/N55B30A	for OE No.:26207556019	Propshaft	PS900155
	2008.01-2014.07	AT	Front	SUV 4WD N54B30A/N55B30A	Date from:2010.04;for OE No.:26208605866	Propshaft	PS900159
	2008.01-2014.07	AT	Rear	SUV 4WD N54B30A/N55B30A	for OE No.:26107564398	Propshaft	PS900166
	2008.01-2014.07	AT	Rear	SUV 4WD N54B30A/N55B30A	Date from:2010.04;for OE No.:26107589129	Propshaft	PS900168
	2008.01-2014.07		Centre	SUV 4WD N54B30A/N55B30A		Center Bearing Support	539921
	2008.01-2014.07		Front	SUV 4WD N54B30A/N55B30A	Inner diameter:38.5mm	Flexible Coupling	510641
	2008.01-2014.07		Front	SUV 4WD N54B30A/N55B30A	Inner diameter:50mm	Flexible Coupling	537625
	2008.01-2014.07		Front	SUV 4WD N54B30A/N55B30A	Inner diameter:48.5mm	Flexible Coupling	537631
	2008.01-2014.07		Front	SUV 4WD N54B30A/N55B30A	Inner diameter:48.5mm	Flexible Coupling Kit	537631S
	2008.01-2014.07		Front	SUV 4WD N54B30A/N55B30A	Inner diameter:38.5mm	Flexible Coupling Kit	537798S
	2014.08-2019.07	AT	Front	SUV 4WD N55B30A	Model year to:2018	Propshaft	PS900159
	2014.08-2019.07	AT	Rear	SUV 4WD N55B30A	for OE No.:26107589128	Propshaft	PS900160
	2014.08-2019.07	AT	Rear	SUV 4WD N55B30A	for OE No.:26107589129	Propshaft	PS900168
	2014.08-2019.07	AT	-	SUV 4WD N55B30A		Joint,propshaft	802222
	2014.08-2019.07		Centre	SUV 4WD N55B30A		Center Bearing Support	539921
	2014.08-2019.07		Front	SUV 4WD N55B30A	Inner diameter:50mm,510596 and 537625 different structure	Flexible Coupling	510596
	2014.08-2019.07		Front	SUV 4WD N55B30A	Inner diameter:50mm,537625 and 510596 different structure	Flexible Coupling	537625
	2014.08-2019.07		Front	SUV 4WD N55B30A	Inner diameter:48.5mm	Flexible Coupling	537631
	2014.08-2019.07		Front	SUV 4WD N55B30A		Flexible Coupling Kit	510596S
3.0 (235 kw)	2012.08-2014.06	AT	Front	SUV 4WD N55B30A		Propshaft	PS900159
	2012.08-2014.06	AT	Rear	SUV 4WD N55B30A		Propshaft	PS900168
	2012.08-2014.06		Front	SUV 4WD N55B30A		Flexible Coupling	510596
3.0 (240 kw)	2009.08-2010.03	AT	Front	SUV 4WD N54B30A		Propshaft	PS900155
	2009.08-2010.03	AT	Rear	SUV 4WD N54B30A		Propshaft	PS900166
	2009.08-2010.03		Centre	SUV 4WD N54B30A		Center Bearing Support	539921
	2009.08-2010.03		Front	SUV 4WD N54B30A		Flexible Coupling	510596
	2014.08-2019.07	AT	Front	SUV 4WD N55B30A	Model year to:2018	Propshaft	PS900159
	2014.08-2019.07	AT	Rear	SUV 4WD N55B30A	for OE No.:26107589128	Propshaft	PS900160
	2014.08-2019.07	AT	Rear	SUV 4WD N55B30A	for OE No.:26107589129	Propshaft	PS900168
	2014.08-2019.07	AT	-	SUV 4WD N55B30A		Joint,propshaft	802222
	2014.08-2019.07		Centre	SUV 4WD N55B30A		Center Bearing Support	539921
	2014.08-2019.07		Front	SUV 4WD N55B30A	510596 and 537625 different structure	Flexible Coupling	510596
	2014.08-2019.07		Front	SUV 4WD N55B30A	537625 and 510596 different structure	Flexible Coupling	537625
	2014.08-2019.07		Front	SUV 4WD N55B30A		Flexible Coupling Kit	510596S
X6 xDrive 40d							
3.0 (225 kw)	2010.04-2014.06	AT	Front	SUV 4WD N57D30B	Model year from:2010	Propshaft	PS900159
	2010.04-2014.06	AT	Rear	SUV 4WD N57D30B	Model year from:2010	Propshaft	PS900168
	2010.04-2014.06		Centre	SUV 4WD N57D30B		Center Bearing Support	539921
	2010.04-2014.06		Front	SUV 4WD N57D30B		Flexible Coupling	537631

	YEAR	TRANSM.	FITTING POSITION	BODY STYLE & DRIVE TYPE & ENGINE	REMARKS	PRODUCT	GSP Ref.
BMW							
X6 xDrive 40d							
3.0 (230 kw)	2014.12-2019.07	AT	Front	SUV 4WD N57D30B	Model year to:2018	Propshaft	PS900159
	2014.12-2019.07	AT	Rear	SUV 4WD N57D30B		Propshaft	PS900168
	2014.12-2019.07		Centre	SUV 4WD N57D30B		Center Bearing Support	539921
	2014.12-2019.07		Front	SUV 4WD N57D30B	Inner diameter:50mm,510596 and 537625 different structure	Flexible Coupling	510596
	2014.12-2019.07		Front	SUV 4WD N57D30B	Inner diameter:50mm,537625 and 510596 different structure	Flexible Coupling	537625
	2014.12-2019.07		Front	SUV 4WD N57D30B	Inner diameter:48.5mm	Flexible Coupling	537631
	2014.12-2019.07		Front	SUV 4WD N57D30B		Flexible Coupling Kit	510596S
X6 xDrive 40i							
3.0 (235 kw)	2012.08-2014.06	AT	Front	SUV 4WD N55B30A		Propshaft	PS900159
	2012.08-2014.06	AT	Rear	SUV 4WD N55B30A		Propshaft	PS900168
	2012.08-2014.06		Front	SUV 4WD N55B30A		Flexible Coupling	510596
3.0 (250 kw)	2019.08-2023.03		Front	SUV 4WD B58B30C		Flexible Coupling	537849
X6 xDrive 50i							
4.0 (300 kw)	2014.08-2019.07	AT	Front	SUV 4WD N63 B40 A	Model year to:2018	Propshaft	PS900159
	2014.08-2019.07	AT	Rear	SUV 4WD N63 B40 A		Propshaft	PS900168
4.4 (300 kw)	2008.07-2014.07	AT	Front	SUV 4WD N63B44A	Date to:2010.04	Propshaft	PS900158
	2008.07-2014.07	AT	Front	SUV 4WD N63B44A	Date from:2010.05	Propshaft	PS900159
	2008.07-2014.07	AT	Rear	SUV 4WD N63B44A	for OE No.:26107564398	Propshaft	PS900166
	2008.07-2014.07	AT	Rear	SUV 4WD N63B44A	Date from:2010.04;for OE No.:26107589129	Propshaft	PS900168
	2008.07-2014.07		Centre	SUV 4WD N63B44A		Center Bearing Support	539921
	2008.07-2014.07		Front	SUV 4WD N63B44A	Inner diameter:50mm	Flexible Coupling	537625
	2008.07-2014.07		Front	SUV 4WD N63B44A	Inner diameter:48.5mm	Flexible Coupling	537631
	2008.07-2014.07		Front	SUV 4WD N63B44A		Flexible Coupling Kit	537631S
4.4 (330 kw)	2009.08-2014.06	AT	Front	SUV 4WD N63B44A	Date to:2010.04	Propshaft	PS900158
	2009.08-2014.06	AT	Front	SUV 4WD N63B44A	Date from:2010.05	Propshaft	PS900159
	2009.08-2014.06	AT	Rear	SUV 4WD N63B44A	for OE No.:26107564398	Propshaft	PS900166
	2009.08-2014.06	AT	Rear	SUV 4WD N63B44A	Date from:2010.04;for OE No.:26107589129	Propshaft	PS900168
	2009.08-2014.06		Centre	SUV 4WD N63B44A		Center Bearing Support	539921
	2009.08-2014.06		Front	SUV 4WD N63B44A		Flexible Coupling	537631
	2009.08-2014.06		Front	SUV 4WD N63B44A		Flexible Coupling Kit	537631S
	2014.08-2019.07	AT	Front	SUV 4WD N63B44B	Model year to:2018	Propshaft	PS900159
	2014.08-2019.07	AT	Rear	SUV 4WD N63B44B		Propshaft	PS900168
	2014.08-2019.07		Centre	SUV 4WD N63B44B		Center Bearing Support	539921
	2014.08-2019.07		Front	SUV 4WD N63B44B		Flexible Coupling	510596
X6 xDrive M50d							
3.0 (280 kw)	2012.04-2014.06	AT	Front	SUV 4WD N57D30C		Propshaft	PS900159
	2012.04-2014.06		Centre	SUV 4WD N57D30C		Center Bearing Support	539921
	2012.04-2014.06		Front	SUV 4WD N57D30C		Flexible Coupling	510596
	2012.04-2014.06		Front;Rear	SUV 4WD N57D30C		Flexible Coupling	517955
	2012.04-2014.06		Front;Rear	SUV 4WD N57D30C		Flexible Coupling Kit	517955S
	2014.08-2019.07	AT	Front	SUV 4WD N57D30C	Model year to:2018	Propshaft	PS900159
	2014.08-2019.07		Centre	SUV 4WD N57D30C		Center Bearing Support	539921
	2014.08-2019.07		Front	SUV 4WD N57D30C		Flexible Coupling	510596
	2014.08-2019.07		Front;Rear	SUV 4WD N57D30C		Flexible Coupling	517955
	2014.08-2019.07		Front;Rear	SUV 4WD N57D30C		Flexible Coupling Kit	517955S
3.0 (294 kw)	2019.08-2023.03		Front;Rear	SUV 4WD B57D30C		Flexible Coupling	517955
X6 xDrive M50i							
4.4 (390 kw)	2019.08-2023.03		Front;Rear	SUV 4WD N63B44D		Flexible Coupling	517955
X7 xDrive 30d							
3.0 (155 kw)	2019.03-2020.07		Front;Rear	SUV 4WD B57D30A		Flexible Coupling	517955
3.0 (183 kw)	2019.03-		Front;Rear	SUV 4WD B57D30A		Flexible Coupling	517955
3.0 (195 kw)	2019.03-		Front;Rear	SUV 4WD B57D30A		Flexible Coupling	517955
X7 xDrive 40i							
3.0 (250 kw)	2019.03-		Front	SUV 4WD B58B30C		Flexible Coupling	537631
X7 xDrive M50d							
3.0 (294 kw)	2019.03-		Front;Rear	SUV 4WD B57D30C		Flexible Coupling	517955
X7 xDrive M50i							
4.4 (390 kw)	2019.07-		Front;Rear	SUV 4WD N63B44D		Flexible Coupling	517955
Z3 Cabrio							
1.8 (85 kw)	1995.10-1998.10	5MT	Rear	Cabriolet RWD M43B184E2		Propshaft	PS901413
	1995.10-1998.10		Centre	Cabriolet RWD M43B184E2		Center Bearing Support	538661
	1995.10-1998.10		Front	Cabriolet RWD M43B184E2		Flexible Coupling	510597
	1995.10-1998.10		Front	Cabriolet RWD M43B184E2		Flexible Coupling Kit	510597S

	YEAR	TRANSM.	FITTING POSITION	BODY STYLE & DRIVE TYPE & ENGINE	REMARKS	PRODUCT	GSP Ref.
BMW							
Z3 Cabrio							
1.9 (85 kw)	1999.01-2003.01	5MT	Rear	Cabriolet RWD M43B194E1		Propshaft	PS901413
	1999.01-2003.01		Centre	Cabriolet RWD M43B194E1		Center Bearing Support	538661
	1999.01-2003.01		Front	Cabriolet RWD M43B194E1		Flexible Coupling	510597
	1999.01-2003.01		Front	Cabriolet RWD M43B194E1		Flexible Coupling	510641
	1999.01-2003.01		Front	Cabriolet RWD M43B194E1		Flexible Coupling Kit	510597S
1.9 (87 kw)	1998.10-2002.10	5MT	Rear	Cabriolet RWD M43B194E1		Propshaft	PS901413
	1998.10-2002.10		Centre	Cabriolet RWD M43B194E1		Center Bearing Support	538661
	1998.10-2002.10		Front	Cabriolet RWD M43B194E1		Flexible Coupling	510597
	1998.10-2002.10		Front	Cabriolet RWD M43B194E1		Flexible Coupling	510641
	1998.10-2002.10		Front	Cabriolet RWD M43B194E1		Flexible Coupling Kit	510597S
1.9 (103 kw)	1995.11-1999.03	5MT	Rear	Cabriolet RWD M44B194S1		Propshaft	PS901413
	1995.11-1999.03		Centre	Cabriolet RWD M44B194S1		Center Bearing Support	538661
	1995.11-1999.03		Front	Cabriolet RWD M44B194S1		Flexible Coupling	510597
	1995.11-1999.03		Front	Cabriolet RWD M44B194S1		Flexible Coupling	510641
	1995.11-1999.03		Front	Cabriolet RWD M44B194S1	Width:32mm	Flexible Coupling Kit	510597S
	1995.11-1999.03		Front	Cabriolet RWD M44B194S1	Width:28mm	Flexible Coupling Kit	510641S
2.0 (110 kw)	1998.09-2000.07		Centre	Cabriolet RWD M52B206S4		Center Bearing Support	538661
	1998.09-2000.07		Front	Cabriolet RWD M52B206S4	Inner diameter:50mm,510596 and 537625 different structure	Flexible Coupling	510596
	1998.09-2000.07		Front	Cabriolet RWD M52B206S4	Inner diameter:38mm	Flexible Coupling	510597
	1998.09-2000.07		Front	Cabriolet RWD M52B206S4	Inner diameter:50mm,537625 and 510596 different structure	Flexible Coupling	537625
	1998.09-2000.07		Front	Cabriolet RWD M52B206S4		Flexible Coupling Kit	510596S
	1998.09-2000.07		Front	Cabriolet RWD M52B206S4		Flexible Coupling Kit	510597S
2.2 (120 kw)	2000.08-2003.01		Front	Cabriolet RWD M54B226S1		Flexible Coupling	510596
2.2 (125 kw)	2000.10-2002.06		Centre	Cabriolet RWD M54B226S1		Center Bearing Support	538661
	2000.10-2002.06		Front	Cabriolet RWD M54B226S1	Inner diameter:50mm,510596 and 537625 different structure	Flexible Coupling	510596
	2000.10-2002.06		Front	Cabriolet RWD M54B226S1	Inner diameter:38mm	Flexible Coupling	510597
	2000.10-2002.06		Front	Cabriolet RWD M54B226S1	Inner diameter:50mm,537625 and 510596 different structure	Flexible Coupling	537625
	2000.10-2002.06		Front	Cabriolet RWD M54B226S1		Flexible Coupling Kit	510596S
	2000.10-2002.06		Front	Cabriolet RWD M54B226S1		Flexible Coupling Kit	510597S
2.8 (142 kw)	1996.11-2000.05		Centre	Cabriolet RWD M52B286S1		Center Bearing Support	538661
	1996.11-2000.05		Front	Cabriolet RWD M52B286S1	Inner diameter:50mm,510596 and 537625 different structure	Flexible Coupling	510596
	1996.11-2000.05		Front	Cabriolet RWD M52B286S1	Inner diameter:38mm	Flexible Coupling	510597
	1996.11-2000.05		Front	Cabriolet RWD M52B286S1	Inner diameter:50mm,537625 and 510596 different structure	Flexible Coupling	537625
	1996.11-2000.05		Front	Cabriolet RWD M52B286S1		Flexible Coupling Kit	510596S
	1996.11-2000.05		Front	Cabriolet RWD M52B286S1		Flexible Coupling Kit	510597S
3.0 (170 kw)	2000.06-2002.06		Centre	Cabriolet RWD M54B306S3		Center Bearing Support	538661
	2000.06-2002.06		Front	Cabriolet RWD M54B306S3	510596 and 537625 different structure	Flexible Coupling	510596
	2000.06-2002.06		Front	Cabriolet RWD M54B306S3	537625 and 510596 different structure	Flexible Coupling	537625
	2000.06-2002.06		Front	Cabriolet RWD M54B306S3		Flexible Coupling Kit	510596S
Z3 Coupe							
2.8 (142 kw)	1998.01-2000.05		Centre	Coupe RWD M52B286S1/M52B286S2		Center Bearing Support	538661
	1998.01-2000.05		Front	Coupe RWD M52B286S1/M52B286S2	Inner diameter:50mm,510596 and 537625 different structure	Flexible Coupling	510596
	1998.01-2000.05		Front	Coupe RWD M52B286S1/M52B286S2	Inner diameter:38mm	Flexible Coupling	510597
	1998.01-2000.05		Front	Coupe RWD M52B286S1/M52B286S2	Inner diameter:50mm,537625 and 510596 different structure	Flexible Coupling	537625
	1998.01-2000.05		Front	Coupe RWD M52B286S1/M52B286S2		Flexible Coupling Kit	510596S
	1998.01-2000.05		Front	Coupe RWD M52B286S1/M52B286S2		Flexible Coupling Kit	510597S
3.0 (170 kw)	2000.06-2002.07		Centre	Coupe RWD M54B306S3		Center Bearing Support	538661
	2000.06-2002.07		Front	Coupe RWD M54B306S3	510596 and 537625 different structure	Flexible Coupling	510596
	2000.06-2002.07		Front	Coupe RWD M54B306S3	537625 and 510596 different structure	Flexible Coupling	537625
	2000.06-2002.07		Front	Coupe RWD M54B306S3		Flexible Coupling Kit	510596S
Z4 Cabrio							
2.0 (110 kw)	2005.03-2009.02		Centre	Cabriolet RWD N46B20B		Center Bearing Support	538653
	2005.03-2009.02		Front	Cabriolet RWD N46B20B		Flexible Coupling	510641
	2005.03-2009.02		Front	Cabriolet RWD N46B20B		Flexible Coupling Kit	510641S
2.2 (125 kw)	2003.10-2005.10		Centre	Cabriolet RWD M54B226S1		Center Bearing Support	538653
	2003.10-2005.10		Front	Cabriolet RWD M54B226S1	Inner diameter:50mm,510596 and 537625 different structure	Flexible Coupling	510596
	2003.10-2005.10		Front	Cabriolet RWD M54B226S1	Inner diameter:38mm	Flexible Coupling	510597
	2003.10-2005.10		Front	Cabriolet RWD M54B226S1	Inner diameter:50mm,537625 and 510596 different structure	Flexible Coupling	537625
	2003.10-2005.10		Front	Cabriolet RWD M54B226S1		Flexible Coupling Kit	510596S
	2003.10-2005.10		Front	Cabriolet RWD M54B226S1		Flexible Coupling Kit	510597S
2.5 (130 kw)	2005.09-2009.02		Centre	Cabriolet RWD N52B25A		Center Bearing Support	538653
	2005.09-2009.02		Front	Cabriolet RWD N52B25A	510596 and 537625 different structure	Flexible Coupling	510596
	2005.09-2009.02		Front	Cabriolet RWD N52B25A	537625 and 510596 different structure	Flexible Coupling	537625
	2005.09-2009.02		Front	Cabriolet RWD N52B25A		Flexible Coupling Kit	510596S

	YEAR	TRANSM.	FITTING POSITION	BODY STYLE & DRIVE TYPE & ENGINE	REMARKS	PRODUCT	GSP Ref.
BMW							
Z4 Cabrio							
2.5 (141 kw)	2002.12-2005.12	AT	Rear	Cabriolet RWD M54B256S5		Propshaft	PS901508
	2002.12-2005.12		Centre	Cabriolet RWD M54B256S5		Center Bearing Support	538653
	2002.12-2005.12		Front	Cabriolet RWD M54B256S5	Inner diameter:50mm,510596 and 537625 different structure	Flexible Coupling	510596
	2002.12-2005.12		Front	Cabriolet RWD M54B256S5	Inner diameter:38mm	Flexible Coupling	510597
	2002.12-2005.12		Front	Cabriolet RWD M54B256S5	Inner diameter:50mm,537625 and 510596 different structure	Flexible Coupling	537625
	2002.12-2005.12		Front	Cabriolet RWD M54B256S5		Flexible Coupling Kit	510596S
	2002.12-2005.12		Front	Cabriolet RWD M54B256S5		Flexible Coupling Kit	510597S
2.5 (155 kw)	2005.09-2009.02		Front	Cabriolet RWD N52B25A		Flexible Coupling	510596
2.5 (160 kw)	2006.01-2008.08		Centre	Cabriolet RWD N52B25A		Center Bearing Support	538653
	2006.01-2008.08		Front	Cabriolet RWD N52B25A	510596 and 537625 different structure	Flexible Coupling	510596
	2006.01-2008.08		Front	Cabriolet RWD N52B25A	537625 and 510596 different structure	Flexible Coupling	537625
	2006.01-2008.08		Front	Cabriolet RWD N52B25A		Flexible Coupling Kit	510596S
3.0 (170 kw)	2002.12-2005.12	AT	Rear	Cabriolet RWD M54B306S3		Propshaft	PS901508
	2002.12-2005.12		Centre	Cabriolet RWD M54B306S3		Center Bearing Support	538653
	2002.12-2005.12		Front	Cabriolet RWD M54B306S3	510596 and 537625 different structure	Flexible Coupling	510596
	2002.12-2005.12		Front	Cabriolet RWD M54B306S3	537625 and 510596 different structure	Flexible Coupling	537625
	2002.12-2005.12		Front	Cabriolet RWD M54B306S3		Flexible Coupling Kit	510596S
3.0 (190 kw)	2006.01-2008.08		Front	Convertible RWD N52 B30 A, N52 B30 BF		Flexible Coupling Kit	510596S
3.0 (195 kw)	2006.01-2008.08		Centre	Cabriolet RWD N52B30A/N52B30BF		Center Bearing Support	538653
	2006.01-2008.08		Front	Cabriolet RWD N52B30A/N52B30BF	510596 and 537625 different structure	Flexible Coupling	510596
	2006.01-2008.08		Front	Cabriolet RWD N52B30A/N52B30BF	537625 and 510596 different structure	Flexible Coupling	537625
	2006.01-2008.08		Front	Cabriolet RWD N52B30A/N52B30BF		Flexible Coupling Kit	510596S
3.2 (252 kw)	2006.01-2008.08		Centre	Cabriolet RWD S54B326S4		Center Bearing Support	538653
Z4 Coupe							
3.0 (195 kw)	2006.04-2008.08		Centre	Coupe RWD N52B30A		Center Bearing Support	538653
	2006.04-2008.08		Front	Coupe RWD N52B30A	510596 and 537625 different structure	Flexible Coupling	510596
	2006.04-2008.08		Front	Coupe RWD N52B30A	537625 and 510596 different structure	Flexible Coupling	537625
	2006.04-2008.08		Front	Coupe RWD N52B30A		Flexible Coupling Kit	510596S
3.2 (252 kw)	2006.04-2008.08		Centre	Coupe RWD S54B326S4		Center Bearing Support	538653
Z4 M40i Cabrio							
3.0 (250 kw)	2018.11-		Centre	Cabriolet RWD B58B30C		Center Bearing Support	538640
	2018.11-		Front;Rear	Cabriolet RWD B58B30C		Flexible Coupling	517955
Z4 Roadster							
3.0 (160 kw)	2005.09-2008.12		Front	Convertible RWD N52B30A		Flexible Coupling Kit	510596S
Z4 sDrive 18i Cabrio							
2.0 (115 kw)	2013.04-2016.08		Front	Cabriolet RWD N20B20A	510596 and 537625 different structure	Flexible Coupling	510596
	2013.04-2016.08		Front	Cabriolet RWD N20B20A	537625 and 510596 different structure	Flexible Coupling	537625
	2013.04-2016.08		Front	Cabriolet RWD N20B20A		Flexible Coupling Kit	510596S
Z4 sDrive 20i Cabrio							
2.0 (120 kw)	2011.09-2016.08		Front	Cabriolet RWD N20B20A	510596 and 537625 different structure	Flexible Coupling	510596
	2011.09-2016.08		Front	Cabriolet RWD N20B20A	537625 and 510596 different structure	Flexible Coupling	537625
	2011.09-2016.08		Front	Cabriolet RWD N20B20A		Flexible Coupling Kit	510596S
	2018.11-		Front	Cabriolet RWD B46B20B/B48B20B	Width:30mm	Flexible Coupling	510596
	2018.11-		Front	Cabriolet RWD B46B20B/B48B20B	Width:32mm	Flexible Coupling	533422
2.0 (135 kw)	2011.09-2016.08		Front	Cabriolet RWD N20B20A	510596 and 537625 different structure	Flexible Coupling	510596
	2011.09-2016.08		Front	Cabriolet RWD N20B20A	537625 and 510596 different structure	Flexible Coupling	537625
	2011.09-2016.08		Front	Cabriolet RWD N20B20A		Flexible Coupling Kit	510596S
2.0 (145 kw)	2018.11-		Front	Cabriolet RWD B46B20B/B48B20B	Width:30mm	Flexible Coupling	510596
	2018.11-		Front	Cabriolet RWD B46B20B/B48B20B	Width:32mm	Flexible Coupling	533422
Z4 sDrive 23i Cabrio							
2.5 (150 kw)	2009.03-2011.08	6AT	Rear	Cabriolet RWD N52B25A/N52B25BF		Propshaft	PS901895
	2009.03-2011.08		Front	Cabriolet RWD N52B25A/N52B25BF	510596 and 537625 different structure	Flexible Coupling	510596
	2009.03-2011.08		Front	Cabriolet RWD N52B25A/N52B25BF	537625 and 510596 different structure	Flexible Coupling	537625
	2009.03-2011.08		Front	Cabriolet RWD N52B25A/N52B25BF		Flexible Coupling Kit	510596S
Z4 sDrive 28i Cabrio							
2.0 (180 kw)	2011.09-2016.08		Front	Cabriolet RWD N20B20A	510596 and 537625 different structure	Flexible Coupling	510596
	2011.09-2016.08		Front	Cabriolet RWD N20B20A	537625 and 510596 different structure	Flexible Coupling	537625
	2011.09-2016.08		Front	Cabriolet RWD N20B20A		Flexible Coupling Kit	510596S
Z4 sDrive 30i Cabrio							
2.0 (190 kw)	2018.11-		Front	Cabriolet RWD B48B20B	Width:30mm	Flexible Coupling	510596
	2018.11-		Front	Cabriolet RWD B48B20B	Width:32mm	Flexible Coupling	533422
3.0 (190 kw)	2009.02-2011.08	6AT	Rear	Cabriolet RWD N52B30A/N52B30B/N52B30BF		Propshaft	PS901895
	2009.02-2011.08		Front	Cabriolet RWD N52B30A/N52B30B/N52B30BF	510596 and 537625 different structure	Flexible Coupling	510596
	2009.02-2011.08		Front	Cabriolet RWD N52B30A/N52B30B/N52B30BF	537625 and 510596 different structure	Flexible Coupling	537625

	YEAR	TRANSM.	FITTING POSITION	BODY STYLE & DRIVE TYPE & ENGINE	REMARKS	PRODUCT	GSP Ref.
BMW							
Z4 sDrive 30i Cabrio							
3.0 (190 kw)	2009.02-2011.08		Front	Cabriolet RWD N52B30A/N52B30B/N52B30BF		Flexible Coupling Kit	510596S
3.0 (195 kw)	2009.05-2011.08	6AT	Rear	Cabriolet RWD N52B30A		Propshaft	PS901895
Z4 sDrive 35i Cabrio							
3.0 (224 kw)	2009.02-2016.08	DCT	Rear	Cabriolet RWD N54B30A	Date from:2010.07;for OE No.:26107614436	Propshaft	PS900169
	2009.02-2016.08	DCT	Rear	Cabriolet RWD N54B30A	for OE No.:26107572935	Propshaft	PS900170
3.0 (225 kw)	2009.02-2016.08	DCT	Rear	Cabriolet RWD N54B30A	Date from:2010.07;for OE No.:26107614436	Propshaft	PS900169
	2009.02-2016.08	DCT	Rear	Cabriolet RWD N54B30A	for OE No.:26107572935	Propshaft	PS900170
	2009.02-2016.08		Front;Rear	Cabriolet RWD N54B30A		Flexible Coupling	517955
	2009.02-2016.08		Front	Cabriolet RWD N54B30A		Flexible Coupling Kit	537669S
	2009.02-2016.08		Front;Rear	Cabriolet RWD N54B30A		Flexible Coupling Kit	517955S
Z4 sDrive 35is Cabrio							
3.0 (250 kw)	2010.03-2016.08	DCT	Rear	Cabriolet RWD N54B30A	Date from:2010.07;for OE No.:26107614436	Propshaft	PS900169
	2010.03-2016.08	DCT	Rear	Cabriolet RWD N54B30A	for OE No.:26107572935	Propshaft	PS900170
	2010.03-2016.08		Front;Rear	Cabriolet RWD N54B30A		Flexible Coupling	517955
	2010.03-2016.08		Front	Cabriolet RWD N54B30A		Flexible Coupling Kit	537669S
	2010.03-2016.08		Front;Rear	Cabriolet RWD N54B30A		Flexible Coupling Kit	517955S
Z8 Cabrio							
4.9 (294 kw)	2000.01-2003.12	AT/MT	Rear	Cabriolet RWD S62B508S1		Joint,propshaft	605057
	2000.01-2003.12		Front	Cabriolet RWD S62B508S1		Flexible Coupling	510663
BMW (BRILLIANCE)							
318i							
2.0 (105 kw)	2004.06-2005.06	MT	Rear	Saloon RWD N42 B20 BZ, N46 B20 CA		Propshaft	PS901493
325i							
2.5 (141 kw)	2003.07-2005.06	AT	Rear	Saloon RWD M54 B25 (256S5)		Propshaft	PS900115
335Li							
3.0 (225 kw)	2012.07-2016.12		Front;Rear	Saloon RWD N55 B30 A		Flexible Coupling Kit	517955S
520Li							
2.0 (115 kw)	2009.06-2010.09	AT	Rear	Saloon RWD N46 B20 CD		Propshaft	PS900133
2.0 (135 kw)	2013.09-2017.05	AT	Rear	Saloon RWD N20 B20 D		Propshaft	PS900136
523Li							
2.5 (130 kw)	2006.10-2010.12	AT	Rear	Saloon RWD N52 B25 BE		Propshaft	PS900132
525Li							
2.0 (160 kw)	2012.08-2017.05	AT	Rear	Saloon RWD N20 B20 A, N20 B20 C		Propshaft	PS900136
2.5 (160 kw)	2006.11-2010.04	AT	Rear	Saloon RWD N52 B25 BF		Propshaft	PS900132
530Li							
3.0 (190 kw)	2006.11-2010.05	AT	Rear	Saloon RWD N52 B30 BF		Propshaft	PS900132
BUICK							
Enclave							
3.6 (215 kw)	2009.01-2013.12	6AT	Rear	SUV 4WD LLT	Model year from:2012	Propshaft	PS900172
Envision							
2.0 (188 kw)	2016.03-2020.12	AT	Rear	SUV 4WD LTG		Propshaft	PS900171
2.5 (147 kw)	2016.05-2020.12	AT	Rear	SUV 4WD LCV		Propshaft	PS900171
Rainier							
4.2 (205 kw)	2003.09-2007.12		Front	SUV 4WD LL8(254CUL6)	RPO Code:NP8	Joint,propshaft	608073
5.3 (224 kw)	2004.09-2007.12	AT	Rear	SUV 4WD LM4		Propshaft	PS901520
	2004.09-2007.12		Front	SUV 4WD LM4	RPO Code:NP8	Joint,propshaft	608073
Rendez Vous							
3.4 (138 kw)	2000.04-2006.09		-	SUV 4WD LA1		Joint,propshaft	606026
Terraza							
3.5 (149 kw)	2004.09-2006.12	AT	Rear	MPV 4WD LX9	Model year from:2005	Propshaft	PS901521
3.9 (179 kw)	2005.09-2006.12	AT	Rear	MPV 4WD LZ9	For Model year:2006	Propshaft	PS901521
CADILLAC							
ATS							
2.0 (203 kw)	2012.08-	AT	Front	Saloon 4WD LTG		Propshaft	PS900175
	2014.09-	AT	Front	Coupe 4WD LTG		Propshaft	PS900175
CTS							
2.0 (203 kw)	2014.01-	AT	Front	Saloon 4WD LTG		Propshaft	PS900175
2.8 (155 kw)	2008.01-2009.12		-	Saloon RWD LP1		Center Bearing Support Kit	539944S
2.8 (158 kw)	2005.03-2007.09	5AT	Rear	Saloon RWD LP1		Propshaft	PS900176
	2005.03-2007.09		-	Saloon RWD LP1		Center Bearing Support	539943
	2005.03-2007.09		-	Saloon RWD LP1		Center Bearing Support Kit	539943S
3.0 (201 kw)	2009.09-2013.10	AT	Front	Saloon 4WD LF1, LFW		Propshaft	PS900002
	2009.09-2013.10		-	Saloon RWD LF1, LFW		Center Bearing Support Kit	539944S
	2009.09-2013.10		-	Saloon 4WD LF1, LFW		Center Bearing Support Kit	539944S

	YEAR	TRANSM.	FITTING POSITION	BODY STYLE & DRIVE TYPE & ENGINE	REMARKS	PRODUCT	GSP Ref.
CADILLAC							
CTS							
3.0 (203 kw)	2008.01-2013.09	AT	Front	Saloon 4WD LF1		Propshaft	PS900002
3.2 (160 kw)	2002.06-2005.05		-	Saloon RWD LA3		Center Bearing Support	539943
	2002.06-2005.05		-	Saloon RWD LA3		Center Bearing Support Kit	539943S
3.6 (189 kw)	2004.01-2007.12	5AT	Rear	Saloon RWD LY7		Propshaft	PS900176
	2004.01-2007.12		-	Saloon RWD LY7		Center Bearing Support	539943
	2004.01-2007.12		-	Saloon RWD LY7		Center Bearing Support Kit	539943S
3.6 (190 kw)	2004.01-2007.12	6AT	Rear	Saloon RWD LY7	Model year from:2004	Propshaft	PS900176
	2004.01-2007.12		-	Saloon RWD LY7		Center Bearing Support	539943
	2004.01-2007.12		-	Saloon RWD LY7		Center Bearing Support Kit	539943S
3.6 (199 kw)	2010.01-2013.09	AT	Front	Saloon 4WD LLT		Propshaft	PS900002
3.6 (227 kw)	2008.03-2012.12	AT	Front	Saloon 4WD LLT		Propshaft	PS900002
3.6 (229 kw)	2008.01-2012.12		-	Coupe RWD LLT		Center Bearing Support Kit	539944S
	2008.01-2012.12		-	Coupe 4WD LLT		Center Bearing Support Kit	539944S
	2008.01-2013.09	6AT	Front	Saloon 4WD LLT		Propshaft	PS900002
	2008.01-2013.09		-	Saloon 4WD LLT		Center Bearing Support Kit	539944S
	2008.01-2013.09		-	Saloon RWD LLT		Center Bearing Support Kit	539944S
3.6 (237 kw)	2011.09-2013.09	6AT	Front	Saloon 4WD LLT		Propshaft	PS900002
	2012.01-2013.09	AT	Front	Saloon 4WD LFX	Model year to:2014	Propshaft	PS900002
5.7 (294 kw)	2004.10-2007.09		-	Saloon RWD LS6(346CUV8)		Center Bearing Support	539943
	2004.10-2007.09		-	Saloon RWD LS6(346CUV8)		Center Bearing Support Kit	539943S
5.7 (298 kw)	2004.01-2005.12		Rear	Saloon RWD LS6(346CUV8)		Propshaft	PS901522
	2004.01-2005.12		-	Saloon RWD LS6(346CUV8)		Center Bearing Support	539943
	2004.01-2005.12		-	Saloon RWD LS6(346CUV8)		Center Bearing Support Kit	539943S
6.0 (298 kw)	2005.09-2007.09		Rear	Saloon RWD LS2(364CUV8)	Model year from:2006	Propshaft	PS901522
Escalade							
5.3 (213 kw)	2002.09-2003.12		Rear	SUV 4WD LM7	For Model year:2002	Propshaft	PS901526
5.7 (190 kw)	1998.10-2000.12	AT	Rear	SUV 4WD L31	For Model year:2008	Propshaft	PS901524
	1998.10-2000.12	AT	Rear	SUV 4WD L31	Model year from:1999,Model year to:2000	Propshaft	PS901525
6.0 (257 kw)	2001.06-2006.12		Rear	SUV 4WD LQ9(364CUV8)	For Model year:2002	Propshaft	PS901526
6.2 (296 kw)	2006.10-2014.07	AT	Rear	SUV 4WD L92	Model year from:2007,Model year to:2008	Propshaft	PS901532
6.2 (301 kw)	2006.10-2014.07	AT	Rear	SUV 4WD L92	Model year from:2007,Model year to:2008;for OE No.:15109402	Propshaft	PS901529
	2006.10-2014.07	AT	Rear	SUV 4WD L94/L9H	Model year from:2009	Propshaft	PS901530
	2006.10-2014.07	AT	Rear	SUV 4WD L92	Model year from:2007,Model year to:2008;for OE No.:15814474	Propshaft	PS901532
	2006.10-2014.07	AT	Rear	SUV 4WD L94/L9H	Model year from:2007,Model year to:2008	Propshaft	PS901532
	2007.01-2010.12		Rear	Pickup 4WD L92, L94	Model year to:2008	Propshaft	PS901532
Escalade EXT							
6.0 (257 kw)	2001.09-2006.12	AT	Rear	Pickup 4WD LQ9(364CUV8)	For Model year:2002	Propshaft	PS901534
6.2 (301 kw)	2006.09-2013.12		Rear	Pickup 4WD L92, L94	Model year from:2007,Model year to:2008	Propshaft	PS901532
SRX							
2.8 (224 kw)	2009.01-	6AT	Rear	SUV 4WD LAU		Propshaft	PS900180
3.0 (183 kw)	2014.01-2016.04	6AT	Rear	SUV 4WD LF1		Propshaft	PS900180
3.0 (195 kw)	2009.10-2016.04	6AT	Rear	SUV 4WD LF1		Propshaft	PS900180
3.0 (198 kw)	2009.01-2016.12	6AT	Rear	SUV 4WD LF1		Propshaft	PS900180
3.6 (190 kw)	2004.01-2009.12	5AT	Rear	SUV RWD LY7	for OE No.:25773497	Propshaft	PS900178
	2004.01-2010.12	5AT	Front	SUV 4WD LY7		Propshaft	PS900002
	2004.01-2010.12	5AT	Rear	SUV 4WD LY7		Propshaft	PS900179
3.6 (194 kw)	2003.09-2006.12	AT	Rear	SUV RWD LY7	Model year from:2004;for OE No.:25773497	Propshaft	PS900178
3.6 (230 kw)	2012.01-2016.04	6AT	Rear	SUV 4WD LFX		Propshaft	PS900180
3.6 (234 kw)	2012.10-2016.04	6AT	Rear	SUV 4WD LFX		Propshaft	PS900180
4.6 (239 kw)	2003.09-2007.12	5AT	Front	SUV 4WD LH2	Model year from:2004	Propshaft	PS900002
	2003.09-2007.12	AT	Rear	SUV 4WD LH2		Propshaft	PS901535
STS							
3.6 (225 kw)	2005.01-2007.12	AT	Front	Saloon 4WD LLT		Propshaft	PS900002
3.6 (229 kw)	2008.01-2011.12		-	Saloon RWD LLT		Center Bearing Support	539943
	2008.01-2011.12		-	Saloon RWD LLT		Center Bearing Support Kit	539943S
4.4 (350 kw)	2005.09-2007.12	AT	Front	Saloon 4WD LC3(267CUV8)		Propshaft	PS900002
4.6 (235 kw)	2007.09-2010.12		Rear	Saloon RWD LH2		Propshaft	PS901536
4.6 (239 kw)	2004.09-2005.12	5AT	Front	Saloon 4WD LH2		Propshaft	PS900002
	2005.05-2007.12	AT	Rear	Saloon RWD LH2		Propshaft	PS901536
	2007.09-2010.12		-	Saloon RWD LH2		Center Bearing Support	539943
	2007.09-2010.12		-	Saloon RWD LH2		Center Bearing Support Kit	539943S

	YEAR	TRANSM.	FITTING POSITION	BODY STYLE & DRIVE TYPE & ENGINE	REMARKS	PRODUCT	GSP Ref.
CADILLAC (SGM)							
CTS							
2.8 (156 kw)	2005.01-2006.12	5AT	Rear	Saloon RWD LP1		Propshaft	PS901523
	2005.01-2006.12		-	Saloon RWD LP1		Center Bearing Support Kit	539944S
3.6 (190 kw)	2005.01-2006.12	5AT	Rear	Saloon RWD LY7		Propshaft	PS901523
	2005.01-2006.12		-	Saloon RWD LY7		Center Bearing Support Kit	539944S
CHERY							
Tiggo							
2.4 (95 kw)	2005.03-	MT	Front	SUV 4WD 4G64S4M		Propshaft	PS901922
	2005.03-	MT	Rear	SUV 4WD 4G64S4M		Propshaft	PS901819
CHEVROLET							
Astro							
4.3 (142 kw)	1994.10-2005.05	AT	Rear	Van 4WD L35(262CUL6)	Model year from:1999,Model year to:2003	Propshaft	PS901538
	1994.10-2005.05		Front	Van 4WD L35(262CUL6)		Joint,propshaft	699117
Astro Bus							
4.3 (142 kw)	1994.10-2005.05		Rear	Bus 4WD L35(262CUL6)	Model year from:1999,Model year to:2003	Propshaft	PS901538
	1994.10-2005.05		Front	Bus 4WD L35(262CUL6)		Joint,propshaft	699117
Astro Extended Cargo							
4.3 (123 kw)	1992.09-1994.12		Front	Van 4WD LB4		Joint,propshaft	699117
4.3 (142 kw)	1994.09-2005.12		Rear	Van 4WD L35(262CUL6)	Model year from:1999,Model year to:2003	Propshaft	PS901538
Avalanche							
5.3 (235 kw)	2005.06-2013.12		Rear	Pickup 4WD LC9(325CUV8), LMG	Model year from:2007;for OE No.:22845688	Propshaft	PS901530
	2005.06-2013.12	AT	Rear	Pickup 4WD LC9(325CUV8), LMG	Model year from:2007,Model year to:2008;for OE No.:15814474	Propshaft	PS901532
Avalanche 1500							
5.3 (231 kw)	2009.01-2013.12		Rear	Pickup 4WD LMG	For OE No.:22845688	Propshaft	PS901530
	2009.01-2013.12		Rear	Pickup 4WD LMG	Model year from:2007,Model year to:2008;for OE No.:15814474	Propshaft	PS901532
5.3 (235 kw)	2006.05-2013.12	AT	Rear	Pickup 4WD LY5(325CUV8)	Model year from:2007,Model year to:2008	Propshaft	PS901532
5.3 (239 kw)	2006.09-2013.12	AT	Rear	Pickup 4WD LY5(325CUV8)	Model year from:2007	Propshaft	PS901532
	2011.12-2013.12	AT	Front	Pickup 4WD LMG	Model year from:2007	Propshaft	202539
	2011.12-2013.12	AT	Rear	Pickup 4WD LMG	Model year from:2007,Model year to:2008	Propshaft	PS901532
Blazer							
4.3 (119 kw)	1994.10-1995.09		Front	Terrain cab wagon closed 4WD LB4		Joint,propshaft	699117
4.3 (132 kw)	1996.08-2003.10		Front	Closed Off-Road Vehicle RWD C 43 NE		Joint,propshaft	699274
4.3 (142 kw)	1994.09-2005.09		Front	Closed Off-Road Vehicle RWD L35(262CUL6)		Joint,propshaft	699117
5.7 (149 kw)	1991.10-1994.12		Front	Terrain cab wagon closed 4WD LO5	For Model year:1994	Propshaft	PS900186
5.7 (157 kw)	1991.10-1996.09	AT	Front	Terrain cab wagon closed 4WD LO5	For Model year:1994	Propshaft	PS900186
6.5 (134 kw)	1993.09-1994.12		Front	Terrain cab wagon closed 4WD L56	For Model year:1994	Propshaft	PS900186
Blazer S10							
4.3 (142 kw)	1994.01-2005.09		Front	Closed Off-Road Vehicle 4WD L35(262CUL6)	Model year from:1999	Propshaft	PS901543
	1994.01-2005.09		Rear	Closed Off-Road Vehicle 4WD L35(262CUL6)	Model year from:1996,Model year to:1999;for OE No.:26055464	Propshaft	PS901541
	1994.01-2005.09	AT	Rear	Closed Off-Road Vehicle 4WD L35(262CUL6)	Model year from:1998;for OE No.:15038490	Propshaft	PS901542
	1994.01-2005.09		Front	Closed Off-Road Vehicle 4WD L35(262CUL6)	RPO Code:NP1	Joint,propshaft	608072
	1994.01-2005.09		Front	Closed Off-Road Vehicle 4WD L35(262CUL6)		Joint,propshaft	699117
	1994.10-2002.08		Front	Closed Off-Road Vehicle 4WD L35(262CUL6), LU3	Model year from:1999	Propshaft	PS901543
	1994.10-2002.08		Rear	Closed Off-Road Vehicle 4WD L35(262CUL6), LU3	Model year from:1996,Model year to:1999;for OE No.:26055464	Propshaft	PS901541
	1994.10-2002.08	AT	Rear	Closed Off-Road Vehicle 4WD L35(262CUL6), LU3	Model year from:1998;for OE No.:15038490	Propshaft	PS901542
C1500							
4.3 (119 kw)	1991.10-1996.09		Front	Pickup RWD LB4	For Model year:1994	Propshaft	PS900186
5.0 (130 kw)	1987.06-1994.12	AT	Front	Pickup RWD LO3	For Model year:1994	Propshaft	PS900186
	1987.09-1995.12		Front	Pickup RWD LO3	For Model year:1994	Propshaft	PS900186
C2500							
4.3 (119 kw)	1988.01-1996.12		Front	Pickup RWD LB4	For Model year:1994	Propshaft	PS900186
Camaro							
2.0 (175 kw)	2016.01-	MT	Rear	Coupe RWD LTG	Model year to:2023	Propshaft	PS901548
2.0 (202 kw)	2016.01-	MT	Rear	Cabriolet RWD LTG	Model year to:2023	Propshaft	PS901548
	2016.01-	MT	Rear	Coupe RWD LTG	Model year to:2023	Propshaft	PS901548
2.0 (205 kw)	2015.09-	MT	Rear	Coupe RWD LTG	Model year from:2016,Model year to:2023	Propshaft	PS901548
3.6 (215 kw)	2011.04-2011.12	AT	Rear	Coupe RWD LLT		Propshaft	PS901547
3.6 (224 kw)	2009.09-2010.12	AT	Rear	Coupe RWD LLT		Propshaft	PS901547
3.6 (227 kw)	2009.09-2012.12	AT	Rear	Coupe RWD LLT		Propshaft	PS901547
3.6 (232 kw)	2010.01-2011.12	AT	Rear	Coupe RWD LLT		Propshaft	PS901547
	2011.01-	AT	Rear	Convertible RWD LLT	Model year to:2015	Propshaft	PS901547
	2011.01-	MT	Rear	Convertible RWD LLT	Model year from:2016,Model year to:2023	Propshaft	PS901548
3.6 (241 kw)	2011.09-2015.12	AT	Rear	Coupe RWD LFX		Propshaft	PS901547
	2012.12-2015.12	AT	Rear	Cabriolet RWD LFX	Model year to:2015	Propshaft	PS901547
	2012.12-2015.12	MT	Rear	Cabriolet RWD LFX	Model year from:2016,Model year to:2023	Propshaft	PS901548

	YEAR	TRANSM.	FITTING POSITION	BODY STYLE & DRIVE TYPE & ENGINE	REMARKS	PRODUCT	GSP Ref.
CHEVROLET							
Camaro							
3.6 (250 kw)	2015.09-	MT	Rear	Coupe RWD LGX	Model year from:2016,Model year to:2023	Propshaft	PS901548
	2016.05-	MT	Rear	Convertible RWD LGX	Model year to:2023	Propshaft	PS901548
5.7 (212 kw)	1996.01-1999.06	AT	Rear	Coupe RWD LS1		Propshaft	PS901544
	1997.10-2002.12	AT	Rear	Cabriolet RWD LS1	Model year from:1998	Propshaft	PS901544
6.2 (295 kw)	2012.03-2015.12	AT	Rear	Coupe RWD L99(376CUV8)		Propshaft	PS901545
6.2 (298 kw)	2009.09-2015.12	AT	Rear	Coupe RWD L99(376CUV8)	Model year from:2010	Propshaft	PS901545
	2011.01-2015.12	AT	Rear	Cabriolet RWD L99(376CUV8)	Model year to:2015	Propshaft	PS901545
6.2 (318 kw)	2009.09-2015.12	AT	Rear	Coupe RWD LS3(376CUV8)	Model year from:2010	Propshaft	PS901545
	2011.01-2015.12	AT	Rear	Cabriolet RWD LS3(376CUV8)	Model year to:2015	Propshaft	PS901545
6.2 (432 kw)	2011.09-	AT	Rear	Convertible RWD LSA	Model year to:2015	Propshaft	PS901545
	2013.05-2015.12	AT	Rear	Coupe RWD LSA		Propshaft	PS901545
7.0 (377 kw)	2014.09-2015.12	MT	Rear	Coupe RWD LS7		Propshaft	PS901546
Captiva							
2.0 (93 kw)	2006.10-2009.12	MT	Rear	SUV 4WD LLW		Propshaft	PS900182
	2006.10-2009.12		Centre	SUV 4WD LLW		Center Bearing Support	538642
	2006.10-2009.12		Centre	SUV FWD LLW		Center Bearing Support	538642
	2006.10-2009.12		Centre	SUV Van FWD LLW		Center Bearing Support	538642
2.0 (110 kw)	2006.07-2011.02	AT	Rear	SUV 4WD LLW		Propshaft	PS900182
	2006.07-2011.02		Centre	SUV 4WD LLW		Center Bearing Support	538642
	2006.07-2011.02		Centre	SUV Van 4WD LLW		Center Bearing Support	538642
	2007.09-2011.06		Centre	SUV FWD LLW		Center Bearing Support	538642
2.0 (120 kw)	2011.01-	AT	Rear	SUV 4WD LNP		Propshaft	PS900182
	2011.01-		Centre	SUV FWD LNP		Center Bearing Support	538642
2.2 (120 kw)	2011.03-	MT	Rear	SUV 4WD LNQ		Propshaft	PS900182
	2011.03-		Centre	SUV FWD LNQ		Center Bearing Support	538642
	2011.03-		Centre	SUV 4WD LNQ		Center Bearing Support	538642
2.2 (135 kw)	2011.03-	AT/MT	Rear	SUV 4WD LNQ		Propshaft	PS900182
	2011.03-		Centre	SUV 4WD LNQ		Center Bearing Support	538642
	2012.01-		Centre	SUV FWD LNQ		Center Bearing Support	538642
2.4 (100 kw)	2006.06-2011.02	MT	Rear	SUV 4WD LD9(147CUL4)		Propshaft	PS900182
	2006.06-2011.02		Centre	SUV 4WD LD9(147CUL4)		Center Bearing Support	538642
	2006.06-2011.02		Centre	SUV FWD LD9(147CUL4)		Center Bearing Support	538642
	2007.01-2011.02	MT	Rear	SUV 4WD LD9(147CUL4)		Propshaft	PS900182
	2007.01-2011.02		Centre	SUV 4WD LD9(147CUL4)		Center Bearing Support	538642
2.4 (103 kw)	2006.12-2011.02		Centre	SUV FWD LD9(146CUL4)		Center Bearing Support	538642
	2006.12-2011.02		Centre	SUV 4WD LD9(146CUL4)		Center Bearing Support	538642
2.4 (105 kw)	2006.12-2011.02		Centre	SUV 4WD LD9(146CUL4)		Center Bearing Support	538642
2.4 (123 kw)	2011.03-	MT	Rear	SUV 4WD LE5		Propshaft	PS900182
	2011.03-		Centre	SUV 4WD LE5		Center Bearing Support	538642
	2011.03-		Centre	SUV FWD LE5		Center Bearing Support	538642
2.4 (124 kw)	2011.03-	MT	Rear	SUV 4WD LE9(145CUL4)		Propshaft	PS900182
2.4 (126 kw)	2012.11-	MT	Rear	SUV 4WD LE9(145CUL4)		Propshaft	PS900182
	2012.11-		Centre	SUV FWD LE9(145CUL4)		Center Bearing Support	538642
3.0 (186 kw)	2012.01-		Centre	SUV 4WD LFW		Center Bearing Support	538642
3.0 (190 kw)	2010.11-2018.09	AT	Rear	SUV 4WD LF1/LFW		Propshaft	PS900182
	2010.11-2018.09		Centre	SUV 4WD LF1/LFW		Center Bearing Support	538642
3.0 (197 kw)	2012.01-	AT	Rear	SUV 4WD LFW		Propshaft	PS900182
3.2 (169 kw)	2006.06-2011.02	AT	Rear	SUV 4WD LU1		Propshaft	PS900182
	2006.06-2011.02		Centre	SUV 4WD LU1		Center Bearing Support	538642
Captiva Sport							
2.4 (100 kw)	2007.01-		Centre	SUV FWD LD9(146CUL4)		Center Bearing Support	538642
3.0 (197 kw)	2012.01-		Centre	SUV 4WD LF1, LFW		Center Bearing Support	538642
Colorado							
5.3 (224 kw)	2008.09-2012.12	AT	Front	Pickup 4WD LH8(325CUV8)	Model year from:2009	Propshaft	202439
Colorado Standard Cab Pickup							
5.3 (224 kw)	2008.09-2012.12	AT	Front	Pickup 4WD LH8(325CUV8)	Model year from:2009	Propshaft	202439
Colorado/S10/Luv D-Max							
2.8 (130 kw)	2003.04-2006.09	AT	Front	Pickup 4WD LK5	Model year from:2004	Propshaft	202439
	2003.04-2006.09		Rear	Pickup 4WD LK5	Model year from:2004;for OE No.:25787947	Propshaft	PS901549
	2003.04-2006.09		Rear	Pickup 4WD LK5	Model year from:2004;for OE No.:25787946	Propshaft	PS901550
Colorado/S10/LUV D-Max							
2.9 (139 kw)	2006.10-	AT	Front	Pickup 4WD LLV	Model year from:2007	Propshaft	202439
	2006.10-		Rear	Pickup 4WD LLV	Model year from:2007;for OE No.:25787947	Propshaft	PS901549
	2006.10-		Rear	Pickup 4WD LLV	For Model year:2007;for OE No.:25787946	Propshaft	PS901550

	YEAR	TRANSM.	FITTING POSITION	BODY STYLE & DRIVE TYPE & ENGINE	REMARKS	PRODUCT	GSP Ref.
CHEVROLET							
Colorado/S10/Luv D-Max							
3.5 (164 kw)	2005.05-2006.09	AT	Front	Pickup 4WD L52	Model year from:2004	Propshaft	202439
	2005.05-2006.09		Rear	Pickup 4WD L52	Model year from:2004;for OE No.:25787947	Propshaft	PS901549
	2005.05-2006.09		Rear	Pickup 4WD L52	Model year from:2004;for OE No.:25787946	Propshaft	PS901550
Colorado/S10/LUV D-Max							
3.7 (181 kw)	2006.10-	AT	Front	Pickup 4WD L5R	Model year from:2007	Propshaft	202439
	2006.10-		Rear	Pickup 4WD L5R	Model year from:2007;for OE No.:25787947	Propshaft	PS901549
	2006.10-		Rear	Pickup 4WD L5R	For Model year:2007;for OE No.:25787946	Propshaft	PS901550
Equinox							
3.4 (138 kw)	2004.08-2009.09	5AT	Rear	SUV 4WD LNJ	Model year from:2005,Model year to:2006	Propshaft	PS900190
	2004.08-2009.09	AT	Rear	SUV 4WD LNJ	Model year from:2008	Propshaft	PS900191
	2004.08-2009.09		-	SUV FWD LNJ		Joint,propshaft	635046
	2004.08-2009.09	5AT	-	SUV 4WD LNJ		Joint,propshaft	635046
3.6 (197 kw)	2007.09-2009.12	AT	Rear	SUV 4WD LY7	Model year from:2008	Propshaft	PS901441
K1500 Extended Cab Pickup							
5.7 (190 kw)	1995.09-1999.12		Front	Pickup 4WD L31	Model year to:1998	Propshaft	PS901537
K1500 Standard Cab Pickup							
4.3 (149 kw)	1995.09-1998.12	AT	Rear	Pickup 4WD L35(262CUL6)	Model year to:1996	Propshaft	PS901524
5.0 (172 kw)	1995.09-1999.12	AT	Rear	Pickup 4WD L30(306CUV8)	Model year to:1996	Propshaft	PS901524
5.7 (190 kw)	1995.09-1999.12	AT	Rear	Pickup 4WD L31	Model year to:1996	Propshaft	PS901524
6.5 (142 kw)	1993.09-1997.12	AT	Rear	Pickup 4WD L65(396CUV8)	Model year to:1996	Propshaft	PS901524
K2500							
4.3 (119 kw)	1988.01-1995.12		Front	Pickup 4WD LB4	For Model year:1994	Propshaft	PS900186
	1988.01-1995.12		Front	Pickup 4WD LB4	For Model year:1995	Propshaft	PS901537
	1992.09-1995.12		Front	Pickup 4WD LB4	For Model year:1994	Propshaft	PS900186
	1992.09-1995.12		Front	Pickup 4WD LB4	For Model year:1995	Propshaft	PS901537
K2500 Crew Cab Pickup							
5.7 (190 kw)	1998.09-2000.12	AT	Front	Pickup 4WD L31		Propshaft	PS900185
K2500 Extended Cab Pickup							
6.5 (142 kw)	1992.09-1997.12		Front	Pickup 4WD L65(396CUV8)	For Model year:1994	Propshaft	PS900186
	1992.09-1997.12		Front	Pickup 4WD L65(396CUV8)	For Model year:1995	Propshaft	PS901537
S10							
2.2 (84 kw)	1994.10-2005.05	AT	Front	Pickup 4WD L43	Model year to:1996	Propshaft	299304
2.2 (89 kw)	2002.09-2003.12		Front	Pickup 4WD LN2	RPO Code:NP1	Joint,propshaft	608072
	2002.09-2003.12		Front	Pickup 4WD LN2	RPO Code:NP8	Joint,propshaft	608073
2.2 (90 kw)	1994.10-2005.05	AT	Front	Pickup 4WD LN2	Model year to:1996	Propshaft	299304
4.3 (119 kw)	1994.10-1995.09	AT	Front	Pickup 4WD LB4		Propshaft	299304
4.3 (127 kw)	1995.10-1998.09	AT	Front	Pickup 4WD LF6(262CUV6)	Model year to:1996	Propshaft	299304
4.3 (132 kw)	1999.08-2001.03		Front	Closed Off-Road Vehicle 4WD C 43 NE		Joint,propshaft	699274
4.3 (142 kw)	1997.10-2004.09		Front	Closed Off-Road Vehicle 4WD L35(262CUL6)	Model year from:1999	Propshaft	PS901543
	1997.10-2004.09		Rear	Closed Off-Road Vehicle 4WD L35(262CUL6)	Model year to:1996	Propshaft	PS901541
	1997.10-2004.09		Front	Closed Off-Road Vehicle 4WD L35(262CUL6)	RPO Code:NP8	Joint,propshaft	608073
	1997.10-2004.09		Front	Closed Off-Road Vehicle 4WD L35(262CUL6)		Joint,propshaft	699274
S10 Pickup							
4.3 (142 kw)	1994.10-2002.08		Front	Pickup 4WD L35(262CUL6)		Propshaft	PS901543
	1994.10-2002.08		Front	Pickup 4WD L35(262CUL6)	RPO Code:NP1	Joint,propshaft	608072
	1994.10-2002.08		Front	Pickup 4WD L35(262CUL6)	RPO Code:NP8	Joint,propshaft	608073
Silverado 1500							
5.3 (235 kw)	2006.09-2013.10	AT	Front	Pickup 4WD LMG		Propshaft	202539
6.0 (224 kw)	1999.10-2007.12	AT	Rear	Pickup RWD LQ4(364CUV8)	Model year to:2005	Propshaft	PS900543
Silverado 1500 Crew Cab Pickup							
4.3 (145 kw)	2004.09-2007.12	AT	Front	Pickup 4WD LU3	Model year from:2008	Propshaft	202539
	2004.09-2007.12	AT	Rear	Pickup 4WD LU3	Model year to:2012	Propshaft	PS901394
Silverado 1500 Standard Cab Pickup							
4.8 (225 kw)	2010.09-2013.12	AT	Rear	Pickup 4WD L20	Model year to:2012	Propshaft	PS901394
5.3 (240 kw)	2008.09-2009.12	AT	Front	Pickup 4WD LMG		Propshaft	202539
	2008.09-2009.12	AT	Rear	Pickup 4WD LMG		Propshaft	PS901394
Silverado 2500							
6.6 (224 kw)	2001.10-2006.08	AT	Rear	Pickup 4WD LB7	Model year to:2004;for OE No.:15109398	Propshaft	PS901393
	2001.10-2006.08	AT	Rear	Pickup RWD LB7	Model year to:2004;for OE No.:15109392	Propshaft	PS901395
	2001.10-2006.08	AT	Rear	Pickup 4WD LB7	Model year to:2004;for OE No.:15109392	Propshaft	PS901395
8.1 (254 kw)	2001.10-2006.08	AT	Rear	Pickup 4WD L18(496CUV8)	Model year to:2004;for OE No.:15109398	Propshaft	PS901393
	2001.10-2006.08	AT	Rear	Pickup 4WD L18(496CUV8)	Model year to:2004;for OE No.:15109392	Propshaft	PS901395

	YEAR	TRANSM.	FITTING POSITION	BODY STYLE & DRIVE TYPE & ENGINE	REMARKS	PRODUCT	GSP Ref.
CHEVROLET							
Silverado 2500 Crew Cab Pickup							
6.0 (224 kw)	2003.09-2004.12	AT	Rear	Pickup 4WD LQ4(364CUV8)	Model year to:2004;for OE No.:15109398	Propshaft	PS901393
	2003.09-2004.12	AT	Rear	Pickup RWD LQ4(364CUV8)	Model year to:2004;for OE No.:15109392	Propshaft	PS901395
	2003.09-2004.12	AT	Rear	Pickup 4WD LQ4(364CUV8)	Model year to:2004;for OE No.:15109392	Propshaft	PS901395
Silverado 2500 HD							
6.0 (263 kw)	2007.09-2008.12	AT	Front	Pickup 4WD LY6		Propshaft	202537
6.0 (272 kw)	2007.09-2010.12	AT	Front	Pickup 4WD LMM		Propshaft	202537
6.6 (224 kw)	2001.01-2005.12	AT/MT	Rear	Pickup RWD LB7	Model year to:2005;for OE No.:15109392	Propshaft	PS901395
	2001.10-2007.12	AT/MT	Rear	Pickup 4WD LB7, LMM	Model year to:2005;for OE No.:15109398	Propshaft	PS901393
	2001.10-2007.12	AT/MT	Rear	Pickup 4WD LB7, LMM	Model year to:2005;for OE No.:15109392	Propshaft	PS901395
8.1 (254 kw)	2001.10-2002.12	AT/MT	Rear	Pickup RWD L18(496CUV8)		Propshaft	PS901395
Silverado 2500 HD Standard Cab Pickup							
6.0 (268 kw)	2008.09-2013.12	AT	Front	Pickup 4WD L96	Model year to:2010	Propshaft	202537
Silverado 3500 HD							
6.0 (233 kw)	2007.09-2008.12	AT	Front	Pickup 4WD LY6		Propshaft	202537
6.0 (263 kw)	2007.09-2008.12	AT	Front	Pickup 4WD LY6		Propshaft	202537
6.0 (268 kw)	2008.09-2013.12	AT	Front	Pickup 4WD L96	Model year to:2010	Propshaft	202537
Silverado 3500 HD Standard Cab Pickup							
6.6 (272 kw)	2007.09-2010.12	AT	Front	Pickup 4WD LMM		Propshaft	202537
Suburban							
6.0 (239 kw)	2002.10-2006.06		Rear	SUV 4WD LQ4(364CUV8)		Propshaft	PS901533
8.1 (254 kw)	2000.05-2006.06		Rear	SUV 4WD L18(496CUV8)	Model year from:2001	Propshaft	PS901540
Suburban 1500							
5.3 (213 kw)	1999.09-2003.12		Rear	SUV 4WD LM7		Propshaft	PS901533
5.3 (217 kw)	2001.09-2007.09		Front	SUV RWD L59		Propshaft	PS901528
5.3 (220 kw)	2003.09-2006.12		Rear	SUV 4WD LM7		Propshaft	PS901533
	2003.09-2006.12		Rear	SUV 4WD L59		Propshaft	PS901533
5.3 (239 kw)	2006.09-2009.12	AT	Front	SUV 4WD LMG	Model year from:2007	Propshaft	202539
	2006.09-2009.12		Rear	SUV 4WD LMG	Model year from:2007,Model year to:2008	Propshaft	PS901532
	2006.09-2013.12	AT	Front	SUV 4WD LC9(325CUV8), LY5(325CUV8)	Model year from:2007,Model year to:2009	Propshaft	202539
	2006.09-2013.12		Rear	SUV 4WD LC9(325CUV8), LY5(325CUV8)	Model year from:2007,Model year to:2008	Propshaft	PS901532
5.3 (243 kw)	2010.01-	AT	Front	SUV 4WD LC9(325CUV8)/LMG		Propshaft	202539
5.7 (190 kw)	1995.10-1999.09	AT	Rear	SUV 4WD L31	Model year from:1998,Model year to:1999	Propshaft	PS901524
6.0 (250 kw)	2005.09-2006.12		Rear	SUV 4WD LQ4(364CUV8)	For Model year:2006	Propshaft	PS901533
6.0 (262 kw)	2006.09-2013.12		Rear	SUV 4WD L96	Model year from:2008,Model year to:2009	Propshaft	PS901530
6.0 (273 kw)	2007.09-2009.12		Rear	SUV 4WD L76	Model year from:2008	Propshaft	PS901530
Suburban 2500							
5.7 (190 kw)	1995.10-1999.09	AT	Rear	SUV 4WD L31	Model year from:1998,Model year to:1999	Propshaft	PS901524
6.0 (243 kw)	2004.09-2005.12		Rear	SUV 4WD LQ4(364CUV8)		Propshaft	PS901533
6.0 (250 kw)	2005.09-2006.12		Rear	SUV 4WD LQ4(364CUV8)		Propshaft	PS901533
6.0 (262 kw)	2006.07-2014.06	AT	Front	SUV 4WD L96	for OE No.:84669663	Propshaft	202537
	2006.07-2014.06	AT	Front	SUV 4WD L96	for OE No.:22845694	Propshaft	202539
	2006.07-2014.06		Rear	SUV 4WD L96		Propshaft	PS901530
6.0 (273 kw)	2006.09-2009.12	AT	Front	SUV 4WD L76		Propshaft	202537
	2006.09-2009.12		Rear	SUV 4WD L76	Model year from:2008	Propshaft	PS901530
8.1 (239 kw)	2004.09-2005.12		Rear	SUV 4WD L18(496CUV8)		Propshaft	PS901533
8.1 (242 kw)	2005.09-2006.12		Rear	SUV 4WD L18(496CUV8)		Propshaft	PS901533
Suburban 3500 HD							
6.0 (268 kw)	2015.09-2018.12	AT	Front	Closed Off-Road Vehicle 4WD L96		Propshaft	202537
	2015.09-2019.12	AT	Front	Closed Off-Road Vehicle 4WD L96		Propshaft	202537
Tahoe							
4.8 (220 kw)	2007.09-2009.12	AT	Front	SUV 4WD LY2		Propshaft	202539
	2007.09-2009.12	AT	Rear	SUV RWD LY2	Model year to:2008	Propshaft	PS901392
5.3 (239 kw)	2006.10-2014.03	AT	Front	SUV 4WD LMG/LY5(325CUV8)	Model year from:2007,Model year to:2009	Propshaft	202539
	2006.10-2014.03	AT	Rear	SUV RWD LY5(325CUV8)	Model year to:2008	Propshaft	PS901392
	2007.01-2014.07	AT	Front	SUV 4WD LC9(325CUV8), LMG	Model year to:2013	Propshaft	202539
	2007.01-2014.07	AT	Rear	SUV RWD LMG	Model year to:2008	Propshaft	PS901392
5.7 (147 kw)	1994.10-1999.12	AT	Front	SUV 4WD LO5	Model year from:1995	Propshaft	PS901537
5.7 (184 kw)	1995.01-1999.12	AT	Front	SUV 4WD LO5	For Model year:1995	Propshaft	PS901537
5.7 (190 kw)	1995.10-1999.12	AT	Front	SUV 4WD L31	Model year from:1995	Propshaft	PS901537
6.0 (248 kw)	2007.09-2012.12	AT	Front	SUV 4WD LFA	Model year from:2008,Model year to:2009	Propshaft	202539
	2010.01-2013.12	AT	Front	SUV 4WD LZ1		Propshaft	202539
6.5 (135 kw)	1994.10-1999.12		Front	SUV 4WD L65	Model year from:1995	Propshaft	PS901537
6.5 (142 kw)	1994.10-1999.12	4AT	Front	SUV 4WD L56	Model year from:1998	Propshaft	PS900187

	YEAR	TRANSM.	FITTING POSITION	BODY STYLE & DRIVE TYPE & ENGINE	REMARKS	PRODUCT	GSP Ref.
CHEVROLET							
Tracker							
1.4 (103 kw)	2013.07-2015.12	MT	Rear	SUV 4WD LUJ		Propshaft	PS900174
Trailblazer							
4.2 (201 kw)	2001.09-2007.02	AT	Front	SUV 4WD LL8(254CUL6)	Model year from:2002	Propshaft	PS900188
	2001.09-2007.02		Front	SUV 4WD LL8(254CUL6)	RPO Code:NP8	Joint,propshaft	608073
4.2 (205 kw)	2002.09-2009.12		Rear	SUV RWD LL8(254CUL6)		Propshaft	PS901519
	2003.04-2005.09	AT	Front	SUV 4WD LL8(254CUL6)		Propshaft	PS900188
	2003.04-2005.09		Front	SUV 4WD LL8(254CUL6)	RPO Code:NP8	Joint,propshaft	608073
4.2 (213 kw)	2007.09-2009.12		Front	SUV 4WD LL8(254CUL6)		Propshaft	PS900188
	2007.09-2009.12		Front	SUV 4WD LL8(254CUL6)	RPO Code:NP8	Joint,propshaft	608073
4.2 (217 kw)	2005.08-2008.09	AT	Front	SUV 4WD LL8(254CUL6)		Propshaft	PS900188
	2005.08-2008.09		Front	SUV 4WD LL8(254CUL6)	RPO Code:NP8	Joint,propshaft	608073
5.3 (216 kw)	2002.09-2009.12		Front	SUV 4WD LM4	RPO Code:NP8	Joint,propshaft	608073
6.0 (290 kw)	2007.09-2009.12		Rear	SUV 4WD LS2(364CUV8)		Propshaft	PS901391
6.0 (295 kw)	2006.09-2008.02	AT	Front	SUV 4WD LS2(364CUV8)	Model year from:2006	Propshaft	PS900188
	2006.09-2008.02		Front	SUV 4WD LS2(364CUV8)	RPO Code:NP8	Joint,propshaft	608073
Traverse							
3.6 (215 kw)	2008.09-	AT	Rear	SUV 4WD LLT	Model year from:2012,Model year to:2017	Propshaft	PS900172
Trax							
1.4 (103 kw)	2012.12-	MT	Rear	SUV 4WD LUV		Propshaft	PS900174
1.6 (100 kw)	2014.11-2015.12	MT	Rear	SUV 4WD LVL		Propshaft	PS900174
1.7 (96 kw)	2012.12-	MT	Rear	SUV 4WD LUD		Propshaft	PS900174
Uplander							
3.5 (149 kw)	2005.01-2006.12	AT	Rear	MPV 4WD LX9	Model year from:2005	Propshaft	PS901521
3.9 (179 kw)	2005.01-2008.09	AT	Rear	MPV 4WD LZ9	For Model year:2006	Propshaft	PS901521
CHRYSLER							
300							
3.6 (215 kw)	2012.01-	AT	Front	Saloon 4WD ERB	Model year to:2014	Propshaft	PS900193
	2012.01-	AT	Front	Saloon RWD ERB	Model year from:2015	Propshaft	PS901409
	2012.01-	AT	Front	Saloon 4WD ERB	Model year from:2015	Propshaft	PS901409
	2012.01-	AT	Rear	Saloon RWD ERB	Model year from:2015;for OE No.:68261528AD	Propshaft	PS901408
	2012.01-	AT	Rear	Saloon 4WD ERB	Model year from:2015;for OE No.:68261528AD	Propshaft	PS901408
	2012.01-	AT	Rear	Saloon RWD ERB	Model year from:2015,Model year to:2017;for OE No.:52123973AH	Propshaft	PS901459
	2012.01-	AT	Rear	Saloon 4WD ERB	Model year to:2014	Propshaft	PS901509
	2012.01-		Centre	Saloon RWD ERB		Center Bearing Support	538612
	2012.01-		Centre	Saloon 4WD ERB		Center Bearing Support	538612
	2012.01-		Front;Rear	Saloon RWD ERB		Flexible Coupling	512678
	2012.01-		Front;Rear	Saloon RWD ERB		Flexible Coupling Kit	538514S
3.6 (218 kw)	2010.09-	AT	Rear	Saloon RWD ERB	Model year from:2015,Model year to:2017	Propshaft	PS901459
	2010.09-		Centre	Saloon RWD ERB		Center Bearing Support	538612
	2010.09-		Front;Rear	Saloon RWD ERB		Flexible Coupling Kit	538514S
5.7 (271 kw)	2010.09-	AT	Front	Saloon 4WD EZH	Model year to:2014	Propshaft	PS900193
	2010.09-	5AT	Rear	Saloon 4WD EZH	Model year to:2014	Propshaft	PS901510
	2010.09-		Centre	Saloon RWD EZH		Center Bearing Support	538612
	2010.09-		Centre	Saloon 4WD EZH		Center Bearing Support	538612
6.4 (350 kw)	2011.09-		Centre	Saloon RWD ESG		Center Bearing Support	538612
300C							
2.7 (130 kw)	2007.01-2010.12	4AT	Rear	Estate RWD EER	Model year to:2008	Propshaft	PS901411
	2007.01-2010.12		Centre	Estate RWD EER		Center Bearing Support	538612
	2007.01-2011.07	4AT	Rear	Saloon RWD EER	Model year to:2008	Propshaft	PS901411
	2007.01-2011.07		Centre	Saloon RWD EER		Center Bearing Support	538612
2.7 (133 kw)	2009.09-2010.12		Front;Rear	Saloon RWD EER		Flexible Coupling Kit	538514S
2.7 (142 kw)	2004.09-2010.12	4AT	Rear	Estate RWD EER	Model year from:2007,Model year to:2008	Propshaft	PS901411
	2004.09-2010.12		Centre	Estate RWD EER		Center Bearing Support	538612
	2004.09-2010.12		Front;Rear	Estate RWD EER	4AT	Flexible Coupling	512678
	2004.09-2010.12		Front;Rear	Estate RWD EER		Flexible Coupling Kit	538514S
	2004.09-2011.07	4AT	Rear	Saloon RWD EER	Model year to:2008	Propshaft	PS901411
	2004.09-2011.07		Centre	Saloon RWD EER		Center Bearing Support	538612
	2004.09-2011.07		Front;Rear	Saloon RWD EER	4AT	Flexible Coupling	512678
	2004.09-2011.07		Front;Rear	Saloon RWD EER		Flexible Coupling Kit	538514S
3.0 (155 kw)	2005.09-2011.12		Centre	Saloon RWD EXL		Center Bearing Support	538612
	2005.09-2011.12		Front	Saloon RWD EXL		Flexible Coupling	512672
	2005.09-2011.12		Front;Rear	Saloon RWD EXL		Flexible Coupling	512677
	2005.09-2011.12		Rear	Saloon RWD EXL		Flexible Coupling Kit	537848S
	2005.09-2011.12		Front;Rear	Saloon RWD EXL		Flexible Coupling Kit	512677S

	YEAR	TRANSM.	FITTING POSITION	BODY STYLE & DRIVE TYPE & ENGINE	REMARKS	PRODUCT	GSP Ref.
CHRYSLER **300C**							
3.0 (160 kw)	2005.09-2010.12	5AT	Rear	Saloon RWD EXL	Model year from:2006,Model year to:2007	Propshaft	PS901412
	2005.09-2010.12		Centre	Estate RWD EXL		Center Bearing Support	538612
	2005.09-2010.12		Centre	Saloon RWD EXL		Center Bearing Support	538612
	2005.09-2010.12		Front	Estate RWD EXL		Flexible Coupling	512672
	2005.09-2010.12		Front	Saloon RWD EXL		Flexible Coupling	512672
	2005.09-2010.12		Front;Rear	Estate RWD EXL		Flexible Coupling	512677
	2005.09-2010.12		Front;Rear	Saloon RWD EXL		Flexible Coupling	512677
	2005.09-2010.12		Rear	Estate RWD EXL		Flexible Coupling Kit	537848S
	2005.09-2010.12		Rear	Saloon RWD EXL		Flexible Coupling Kit	537848S
	2005.09-2010.12		Front;Rear	Estate RWD EXL		Flexible Coupling Kit	512677S
	2005.09-2010.12		Front;Rear	Saloon RWD EXL		Flexible Coupling Kit	512677S
3.0 (172 kw)	2014.04-		Centre	Saloon RWD EHD		Center Bearing Support	538612
3.0 (176 kw)	2011.09-		Centre	Saloon RWD EXF		Center Bearing Support	538612
3.5 (183 kw)	2004.09-2010.12	AT	Front	Estate 4WD EGG		Propshaft	PS900193
	2004.09-2010.12	5AT	Rear	Estate RWD EGG	Model year from:2006,Model year to:2008;for OE No.:4593681AA	Propshaft	PS901410
	2004.09-2010.12	5AT	Rear	Saloon RWD EGG	Model year from:2007,Model year to:2008;for OE No.:4593681AA	Propshaft	PS901410
	2004.09-2010.12	5AT	Rear	Estate RWD EGG	Model year from:2007,Model year to:2008;for OE No.:04593679AA	Propshaft	PS901411
	2004.09-2010.12	5AT	Rear	Saloon RWD EGG	Model year from:2007,Model year to:2008;for OE No.:04593679AA	Propshaft	PS901411
	2004.09-2010.12	AT	Rear	Estate 4WD EGG	Model year from:2009,Model year to:2010	Propshaft	PS901509
	2004.09-2010.12		Centre	Estate 4WD EGG		Center Bearing Support	538612
	2004.09-2010.12		Centre	Estate RWD EGG		Center Bearing Support	538612
	2004.09-2010.12		Centre	Saloon RWD EGG		Center Bearing Support	538612
	2004.09-2010.12		Front;Rear	Estate 4WD EGG	5AT	Flexible Coupling	512678
	2004.09-2010.12		Front;Rear	Estate RWD EGG	5AT	Flexible Coupling	512678
	2004.09-2010.12		Front;Rear	Saloon RWD EGG	5AT	Flexible Coupling	512678
	2004.09-2010.12		Front;Rear	Estate 4WD EGG		Flexible Coupling Kit	538514S
	2004.09-2010.12		Front;Rear	Estate RWD EGG		Flexible Coupling Kit	538514S
	2004.09-2010.12		Front;Rear	Saloon RWD EGG		Flexible Coupling Kit	538514S
3.5 (186 kw)	2004.09-2010.12	AT	Rear	Saloon RWD EGG	Model year from:2007,Model year to:2008;for OE No.:4593681AA	Propshaft	PS901410
	2004.09-2010.12	AT	Rear	Saloon RWD EGG	Model year from:2007,Model year to:2008;for OE No.:04593679AA	Propshaft	PS901411
	2005.01-2010.12	AT	Front	Saloon 4WD EGG		Propshaft	PS900193
	2005.01-2010.12	AT	Rear	Saloon 4WD EGG	Model year from:2009,Model year to:2010	Propshaft	PS901509
	2005.01-2010.12		Centre	Saloon 4WD EGG		Center Bearing Support	538612
	2005.01-2010.12		Front;Rear	Saloon 4WD EGG	5AT	Flexible Coupling	512678
	2005.01-2010.12		Front;Rear	Saloon 4WD EGG		Flexible Coupling Kit	538514S
3.6 (210 kw)	2011.01-	8AT	Front	Saloon RWD ERB	Model year from:2015	Propshaft	PS901409
	2011.01-	AT	Rear	Saloon RWD ERB	Model year from:2015;for OE No.:68261528AD	Propshaft	PS901408
	2011.01-	AT	Rear	Saloon RWD ERB	Model year from:2015,Model year to:2017;for OE No.:52123973AH	Propshaft	PS901459
	2011.01-		Centre	Saloon RWD ERB		Center Bearing Support	538612
	2011.01-		Front;Rear	Saloon RWD ERB		Flexible Coupling	512678
	2011.01-		Front;Rear	Saloon RWD ERB		Flexible Coupling Kit	538514S
	2012.12-	AT	Front	Saloon 4WD ERB	Model year to:2014	Propshaft	PS900193
	2012.12-	AT	Front	Saloon 4WD ERB	Model year from:2015	Propshaft	PS901409
	2012.12-	AT	Rear	Saloon 4WD ERB	Model year from:2015;for OE No.:68261528AD	Propshaft	PS901408
	2012.12-	AT	Rear	Saloon 4WD ERB	Model year to:2014	Propshaft	PS901509
	2012.12-		Centre	Saloon 4WD ERB		Center Bearing Support	538612
3.6 (213 kw)	2017.01-	AT	Front	Saloon RWD ERB		Propshaft	PS901409
	2017.01-	AT	Rear	Saloon RWD ERB		Propshaft	PS901408
	2017.01-		Centre	Saloon RWD ERB		Center Bearing Support	538612
3.6 (216 kw)	2015.04-	AT	Front	Saloon RWD ERB		Propshaft	PS901409
	2015.04-	AT	Rear	Saloon RWD ERB	for OE No.:68261528AD	Propshaft	PS901408
	2015.04-	AT	Rear	Saloon RWD ERB	Model year to:2017;for OE No.:52123973AH	Propshaft	PS901459
	2015.04-		Centre	Saloon RWD ERB		Center Bearing Support	538612
3.6 (218 kw)	2011.01-	AT	Front	Saloon RWD ERB	Model year from:2015	Propshaft	PS901409
	2011.01-	5AT/8AT	Rear	Saloon RWD ERB	Model year from:2015;for OE No.:68261528AD	Propshaft	PS901408
	2011.01-	AT	Rear	Saloon RWD ERB	Model year from:2015,Model year to:2017;for OE No.:52123973AH	Propshaft	PS901459
	2011.01-		Centre	Saloon RWD ERB		Center Bearing Support	538612
	2011.01-		Front;Rear	Saloon RWD ERB		Flexible Coupling Kit	538514S
	2011.09-	AT	Rear	Saloon 4WD ERB	Model year from:2012,Model year to:2014	Propshaft	PS901509
	2011.09-		Centre	Saloon 4WD ERB		Center Bearing Support	538612
	2011.09-		Front;Rear	Saloon 4WD ERB		Flexible Coupling Kit	538514S
3.6 (224 kw)	2014.09-2023.12		Centre	Saloon RWD ERB		Center Bearing Support	538612
	2014.09-2023.12		Centre	Saloon 4WD ERB		Center Bearing Support	538612

	YEAR	TRANSM.	FITTING POSITION	BODY STYLE & DRIVE TYPE & ENGINE	REMARKS	PRODUCT	GSP Ref.
CHRYSLER							
300C							
5.7 (250 kw)	2004.09-2008.08	AT	Front	Saloon 4WD EZB		Propshaft	PS900193
	2004.09-2008.08		Centre	Saloon 4WD EZB		Center Bearing Support	538612
	2004.09-2008.08		Front;Rear	Saloon 4WD EZB		Flexible Coupling Kit	538514S
	2004.09-2010.12	AT	Rear	Saloon RWD EZB/EZD/EZH	Modelcode:LX	Propshaft	PS901787
	2004.09-2010.12		Centre	Estate RWD EZB/EZD/EZH		Center Bearing Support	538612
	2004.09-2010.12		Centre	Saloon RWD EZB/EZD/EZH		Center Bearing Support	538612
	2004.09-2010.12		Front;Rear	Saloon RWD EZB/EZD/EZH	Engine Code:EZH	Flexible Coupling	512677
	2004.09-2010.12		Front;Rear	Estate RWD EZB/EZD/EZH		Flexible Coupling	512678
	2004.09-2010.12		Front;Rear	Saloon RWD EZB/EZD/EZH	5AT,Engine Code:EZB	Flexible Coupling	512678
	2004.09-2010.12		Front;Rear	Estate RWD EZB/EZD/EZH		Flexible Coupling Kit	538514S
	2004.09-2010.12		Front;Rear	Saloon RWD EZB/EZD/EZH		Flexible Coupling Kit	538514S
	2005.04-2010.12	AT	Front	Estate 4WD EZB/EZH		Propshaft	PS900193
	2005.04-2010.12		Centre	Estate 4WD EZB/EZH		Center Bearing Support	538612
	2005.04-2010.12		Front;Rear	Estate 4WD EZB/EZH	5AT	Flexible Coupling	512678
	2005.04-2010.12		Front;Rear	Estate 4WD EZB/EZH		Flexible Coupling Kit	538514S
5.7 (256 kw)	2004.09-2007.12		Centre	Saloon RWD EZB		Center Bearing Support	538612
	2004.09-2007.12		Front;Rear	Saloon RWD EZB		Flexible Coupling Kit	538514S
5.7 (265 kw)	2009.05-2010.12	5AT	Rear	Saloon RWD EZH	Modelcode:LX	Propshaft	PS901787
	2009.05-2010.12		Centre	Saloon RWD EZH		Center Bearing Support	538612
	2009.05-2010.12		Front;Rear	Saloon RWD EZH		Flexible Coupling	512677
	2009.05-2010.12		Front;Rear	Saloon RWD EZH		Flexible Coupling Kit	512677S
5.7 (268 kw)	2008.09-2010.12	5AT	Rear	Saloon RWD EZH	Modelcode:LX,Date to:2014.12	Propshaft	PS901787
	2008.09-2010.12		Centre	Saloon RWD EZH		Center Bearing Support	538612
	2008.09-2010.12		Front;Rear	Saloon RWD EZH		Flexible Coupling Kit	538514S
	2009.05-2010.12	AT	Front	Saloon 4WD EZD/EZH	Model year to:2014	Propshaft	PS900193
	2009.05-2010.12	5AT	Rear	Saloon 4WD EZD/EZH	Model year from:2009,Model year to:2014	Propshaft	PS901510
	2009.05-2010.12		Centre	Saloon 4WD EZD/EZH		Center Bearing Support	538612
	2009.05-2010.12		Front;Rear	Saloon 4WD EZD/EZH		Flexible Coupling Kit	538514S
6.1 (317 kw)	2005.06-2010.12		Centre	Estate RWD ESF		Center Bearing Support	538612
	2005.06-2010.12		Centre	Saloon RWD ESF		Center Bearing Support	538612
6.4 (347 kw)	2012.01-		Centre	Saloon RWD ESG		Center Bearing Support	538612
6.4 (401 kw)	2012.01-		Centre	Saloon RWD ESG		Center Bearing Support	538612
Aspen							
4.7 (172 kw)	2006.02-2008.12	AT	Front	SUV 4WD EVA	For Model year:2007	Propshaft	PS900218
	2006.02-2008.12	5AT	Rear	SUV 4WD EVA	Model year from:2007	Propshaft	PS900194
4.7 (226 kw)	2008.01-2009.12	5AT	Front	SUV 4WD EVE		Propshaft	PS901407
5.7 (254 kw)	2006.02-2009.12	5AT	Front	SUV 4WD EZB	Model year from:2007	Propshaft	PS901407
	2006.02-2009.12	AT	Rear	SUV RWD EZB		Propshaft	PS901406
5.7 (280 kw)	2008.04-2008.12	5AT	Front	SUV 4WD EZD		Propshaft	PS901407
	2008.04-2008.12	5AT	Rear	SUV RWD EZD		Propshaft	PS901406
5.7 (293 kw)	2008.04-2009.12	AT	Front	SUV 4WD EZE	for OE No.:52123197AB	Propshaft	PS900218
	2008.04-2009.12	AT	Front	SUV 4WD EZE	for OE No.:52123196AA	Propshaft	PS901407
	2008.04-2009.12	AT	Rear	SUV 4WD EZE		Propshaft	PS900194
	2008.04-2009.12	AT	Rear	SUV RWD EZE		Propshaft	PS901406
Pacifica							
3.5 (186 kw)	2003.08-2008.09	4AT	Rear	MPV 4WD EGN	Model year to:2006	Propshaft	PS901458
4.0 (190 kw)	2006.06-2008.09	AT	Rear	MPV 4WD EMM	Model year from:2007,Model year to:2007	Propshaft	PS901457
CUPRA							
Ateca							
2.0 (221 kw)	2018.09-		Front	SUV 4WD DNFC/DNUE		Flexible Coupling	537626
	2018.09-		Rear	SUV 4WD DNFC/DNUE		Flexible Coupling	533882
	2018.09-		Front	SUV 4WD DNFC/DNUE		Flexible Coupling Kit	537626S
	2018.09-		Rear	SUV 4WD DNFC/DNUE		Flexible Coupling Kit	533882S
Formentor							
2.0 (140 kw)	2021.01-		Front	SUV 4WD DNNA		Flexible Coupling	537626
	2021.01-		Rear	SUV 4WD DNNA		Flexible Coupling	533882
	2021.01-		Front	SUV 4WD DNNA		Flexible Coupling Kit	537626S
	2021.01-		Rear	SUV 4WD DNNA		Flexible Coupling Kit	533882S
2.0 (228 kw)	2020.07-		Front	SUV 4WD DNFB		Flexible Coupling	537626
	2020.07-		Rear	SUV 4WD DNFB		Flexible Coupling	533882
	2020.07-		Front	SUV 4WD DNFB		Flexible Coupling Kit	537626S
	2020.07-		Rear	SUV 4WD DNFB		Flexible Coupling Kit	533882S

	YEAR	TRANSM.	FITTING POSITION	BODY STYLE & DRIVE TYPE & ENGINE	REMARKS	PRODUCT	GSP Ref.
CUPRA **Leon Sportstourer**							
2.0 (228 kw)	2021.06-		Front	Estate 4WD DNFB		Flexible Coupling	537626
	2021.06-		Rear	Estate 4WD DNFB		Flexible Coupling	533882
	2021.06-		Front	Estate 4WD DNFB		Flexible Coupling Kit	537626S
	2021.06-		Rear	Estate 4WD DNFB		Flexible Coupling Kit	533882S
DACIA **Duster**							
1.2 (92 kw)	2015.06-2018.01		Centre	SUV 4WD H5F404		Center Bearing Support Kit	539031S
	2017.10-	MT	Rear	SUV 4WD H5F410		Propshaft	PS900557
1.3 (96 kw)	2019.01-	MT	Rear	SUV 4WD H5H470/H5H480/H5H494		Propshaft	PS900557
1.3 (110 kw)	2019.01-	MT	Rear	SUV 4WD H5H470/H5H480		Propshaft	PS900557
1.5 (66 kw)	2010.10-2018.01		Centre	SUV 4WD K9K884/K9K894		Center Bearing Support Kit	539031S
1.5 (80 kw)	2013.04-2018.01	MT	Rear	SUV Van 4WD K9K858	Date to:2018.01	Propshaft	PS900557
	2013.08-2018.01	MT	Rear	SUV 4WD K9K658/K9K856/K9K858/K9K898		Propshaft	PS900557
	2013.08-2018.01		Centre	SUV 4WD K9K658/K9K856/K9K858/K9K898		Center Bearing Support Kit	539031S
	2017.10-	MT	Rear	SUV 4WD K9K658		Propshaft	PS900557
1.5 (81 kw)	2010.10-2018.01	MT	Rear	SUV 4WD K9K856/K9K858/K9K896/K9K898		Propshaft	PS900557
	2010.10-2018.01		Centre	SUV 4WD K9K856/K9K858/K9K896/K9K898		Center Bearing Support Kit	539031S
1.5 (84 kw)	2022.01-		Centre	SUV 4WD K9K874		Center Bearing Support Kit	539031S
1.5 (85 kw)	2017.10-	MT	Rear	SUV 4WD K9K874/K9K878		Propshaft	PS900557
1.6 (77 kw)	2010.03-2018.01		Centre	SUV 4WD K4M490/K4M606/K4M646/K4M690		Center Bearing Support Kit	539031S
1.6 (84 kw)	2015.06-2018.01	MT	Rear	SUV 4WD H4M730		Propshaft	PS900557
	2015.06-2018.01	MT	Rear	SUV Van 4WD H4M738	Date to:2018.01	Propshaft	PS900557
	2015.06-2018.01		Centre	SUV 4WD H4M730		Center Bearing Support Kit	539031S
	2017.10-	MT	Rear	SUV 4WD H4M738		Propshaft	PS900557
DAF **FA 65 CF 180**							
6.24 (133 kw)	1998.02-2000.12		Centre	Platform/Chassis 4x2 NS 133 M		Center Bearing Support	538678
FA 65 CF 210							
6.24 (156 kw)	1998.02-2000.12		Centre	Platform/Chassis 4x2 NS 156 M		Center Bearing Support	538678
FA 65 CF 240							
6.24 (177 kw)	1998.02-2000.12		Centre	Platform/Chassis 4x2 NS 177 M		Center Bearing Support	538678
FA 65.180							
6.24 (133 kw)	1993.03-1998.02		Centre	Platform/Chassis 4x2 NS 133 L, NS 133 M		Center Bearing Support	538678
FA 65.210							
6.24 (156 kw)	1993.03-1998.02		Centre	Platform/Chassis 4x2 NS 156 L, NS 156 M		Center Bearing Support	538678
FA 65.240							
6.24 (177 kw)	1996.05-1998.02		Centre	Platform/Chassis 4x2 NS 177 M		Center Bearing Support	538678
FA 65.300							
6.691 (220 kw)	2009.01-2013.05		Centre	Platform/Chassis 4x2 GR 220 (01.09-.)		Center Bearing Support	538678
FA 75 CF 250							
9.2 (183 kw)	1998.02-2000.12		Centre	Platform/Chassis 4x2 PF 183 M		Center Bearing Support	538678
FA 75 CF 290							
9.2 (212 kw)	1998.02-2000.12		Centre	Platform/Chassis 4x2 PF 212 M		Center Bearing Support	538678
FA 75 CF 320							
9.2 (235 kw)	1998.02-2000.12		Centre	Platform/Chassis 4x2 PF 235 M		Center Bearing Support	538678
FA 75.250							
9.2 (183 kw)	2001.01-2013.05		Centre	Platform/Chassis 4x2 PE 183 C (01.01-.), PR 183 S (10.06-.)		Center Bearing Support	538678
FA 75.310							
9.2 (228 kw)	2001.01-2013.05		Centre	Platform/Chassis 4x2 PE 228 C (01.01-.), PR 228 S (10.06-.)		Center Bearing Support	538678
FA 75.360							
9.2 (265 kw)	2001.01-2013.05		Centre	Platform/Chassis 4x2 PE 265 C (01.01-.), PR 265 S (10.06-.)		Center Bearing Support	538678
FA 85 CF 340							
12.58 (250 kw)	1998.02-2000.12		Centre	Platform/Chassis 4x2 XF 250 M		Center Bearing Support	538678
FA 85 CF 380							
12.58 (280 kw)	1998.02-2000.12		Centre	Platform/Chassis 4x2 XF 280 M		Center Bearing Support	538678
FA 85 CF 430							
12.58 (315 kw)	1998.02-2000.12		Centre	Platform/Chassis 4x2 XF 315 M		Center Bearing Support	538678
FA 85.340							
12.58 (250 kw)	2001.01-2013.05		Centre	Platform/Chassis 4x2 XE 250 C (01.01-.)		Center Bearing Support	538678
FAC 85 CF 340							
12.58 (250 kw)	1998.02-2000.12		Centre	Platform/Chassis 8x2/4 XF 250 M		Center Bearing Support	538678
FAC 85 CF 380							
12.58 (280 kw)	1998.02-2000.12		Centre	Platform/Chassis 8x2/4 XF 280 M		Center Bearing Support	538678

	YEAR	TRANSM.	FITTING POSITION	BODY STYLE & DRIVE TYPE & ENGINE	REMARKS	PRODUCT	GSP Ref.
DAF							
FAC 85 CF 430							
12.58 (315 kw)	1998.02-2000.12		Centre	Platform/Chassis 8x2/4 XF 315 M		Center Bearing Support	538678
FAD 75.250							
9.2 (183-184 kw)	2001.01-2013.05		Centre	Platform/Chassis 8x4/4 PR 183 S (10.06-.)		Center Bearing Support	538678
FAD 75.310							
9.2 (228 kw)	2001.01-2013.05		Centre	Platform/Chassis 8x4/4 PR 228 S (10.06-.)		Center Bearing Support	538678
FAD 75.360							
9.2 (265 kw)	2001.01-2013.05		Centre	Platform/Chassis 8x4/4 PR 265 S (10.06-.)		Center Bearing Support	538678
FAD 85 CF 340							
12.58 (250 kw)	1998.02-2000.12		Centre	Platform/Chassis 8x4/4 XF 250 M		Center Bearing Support	538678
FAD 85 CF 380							
12.58 (280 kw)	1998.02-2000.12		Centre	Platform/Chassis 8x4/4 XF 280 M		Center Bearing Support	538678
FAG 75 CF 250,FAN 75 CF 250							
9.2 (183 kw)	1998.02-2000.12		Centre	Platform/Chassis 6x2/4 PF 183 M		Center Bearing Support	538678
FAG 75 CF 290,FAN 75 CF 290							
9.2 (212 kw)	1998.02-2000.12		Centre	Platform/Chassis 6x2/4 PF 212 M		Center Bearing Support	538678
FAG 75 CF 320,FAN 75 CF 320							
9.2 (235 kw)	1998.02-2000.12		Centre	Platform/Chassis 6x2/4 PF 235 M		Center Bearing Support	538678
FAG 75.250, FAN 75.250							
9.2 (183 kw)	2001.01-2013.05		Centre	Platform/Chassis 6x2/4 PE 183 C (01.01-.), PE 183 C (01.01-.), PE 183 C (01.01-.), PR 183 S (10.06-.)		Center Bearing Support	538678
FAG 75.310, FAN 75.310							
9.2 (228 kw)	2001.01-2013.05		Centre	Platform/Chassis 6x2/4 PE 228 C (01.01-.), PE 228 C (01.01-.), PE 228 C (01.01-.), PR 228 S (10.06-.)		Center Bearing Support	538678
FAG 75.360, FAN 75.360							
9.2 (265 kw)	2001.01-2013.05		Centre	Platform/Chassis 6x2/4 PE 265 C (01.01-.), PE 265 C (01.01-.), PE 265 C (01.01-.), PR 265 S (10.06-.)		Center Bearing Support	538678
FAR 75 CF 250,FAS 75 CF 250							
9.2 (183 kw)	1998.02-2000.12		Centre	Platform/Chassis 6x2 PF 183 M		Center Bearing Support	538678
FAR 75 CF 290,FAS 75 CF 290							
9.2 (212 kw)	1998.02-2000.12		Centre	Platform/Chassis 6x2 PF 212 M		Center Bearing Support	538678
FAR 75 CF 320,FAS 75 CF 320							
9.2 (235 kw)	1998.02-2000.12		Centre	Platform/Chassis 6x2 PF 235 M		Center Bearing Support	538678
FAR 75.250, FAS 75.250							
9.2 (183 kw)	2001.01-2013.05		Centre	Platform/Chassis 6x2 PE 183 C (01.01-.), PE 183 C (01.01-.), PE 183 C (01.01-.), PR 183 S (10.06-.)		Center Bearing Support	538678
FAR 75.310, FAS 75.310							
9.2 (228 kw)	2001.01-2013.05		Centre	Platform/Chassis 6x2 PE 228 C (01.01-.), PE 228 C (01.01-.), PE 228 C (01.01-.), PR 228 S (10.06-.)		Center Bearing Support	538678
FAR 75.360, FAS 75.360							
9.2 (265 kw)	2001.01-2013.05		Centre	Platform/Chassis 6x2 PE 265 C (01.01-.), PE 265 C (01.01-.), PE 265 C (01.01-.), PR 265 S (10.06-.)		Center Bearing Support	538678
FAT 75 CF 250							
9.2 (183 kw)	1998.02-2000.12		Centre	Platform/Chassis 6x4 PF 183 M		Center Bearing Support	538678
FAT 75 CF 290							
9.2 (212 kw)	1998.02-2000.12		Centre	Platform/Chassis 6x4 PF 212 M		Center Bearing Support	538678
FAT 75 CF 320							
9.2 (235 kw)	1998.02-2000.12		Centre	Platform/Chassis 6x4 PF 235 M		Center Bearing Support	538678
FAT 75.250							
9.2 (183 kw)	2001.01-2013.05		Centre	Platform/Chassis 6x4 PE 183 C (01.01-.), PR 183 S (10.06-.)		Center Bearing Support	538678
FAT 75.310							
9.2 (228 kw)	2001.01-2013.05		Centre	Platform/Chassis 6x4 PE 228 C (01.01-.), PR 228 S (10.06-.)		Center Bearing Support	538678
FAT 75.360							
9.2 (265 kw)	2001.01-2013.05		Centre	Platform/Chassis 6x4 PE 265 C (01.01-.), PR 265 S (10.06-.)		Center Bearing Support	538678
FAV 65 CF 180							
6.24 (133 kw)	1998.02-2000.12		Centre	Platform/Chassis 4x4 NS 133 M		Center Bearing Support	538678
FAV 65 CF 210							
6.24 (156 kw)	1998.02-2000.12		Centre	Platform/Chassis 4x4 NS 156 M		Center Bearing Support	538678
FAV 65.180							
6.24 (133 kw)	1993.03-1998.02		Centre	Platform/Chassis 4x4 NS 133 L, NS 133 M		Center Bearing Support	538678
FAV 65.210							
6.24 (156 kw)	1993.03-1998.02		Centre	Platform/Chassis 4x4 NS 156 L, NS 156 M		Center Bearing Support	538678
FT 75 CF 250							
9.2 (183 kw)	1998.02-2000.12		Centre	Truck Tractor 4x2 PF 183 M		Center Bearing Support	538678
FT 75 CF 290							
9.2 (212 kw)	1998.02-2000.12		Centre	Truck Tractor 4x2 PF 212 M		Center Bearing Support	538678
FT 75 CF 320							
9.2 (235 kw)	1998.02-2000.12		Centre	Truck Tractor 4x2 PF 235 M		Center Bearing Support	538678
FT 75.250							
9.2 (183 kw)	2001.01-2013.05		Centre	Truck Tractor 4x2 PE 183 C (01.01-.), PR 183 S (10.06-.)		Center Bearing Support	538678

	YEAR	TRANSM.	FITTING POSITION	BODY STYLE & DRIVE TYPE & ENGINE	REMARKS	PRODUCT	GSP Ref.
DAF							
FT 75.310							
9.2 (228 kw)	2001.01-2013.05		Centre	Truck Tractor 4x2 PE 228 C (01.01-.), PR 228 S (10.06-.)		Center Bearing Support	538678
FT 75.360							
9.2 (265 kw)	2001.01-2013.05		Centre	Truck Tractor 4x2 PE 265 C (01.01-.), PR 265 S (10.06-.)		Center Bearing Support	538678
FTG 85.460							
12.9 (340 kw)	2005.10-2013.05		Centre	Truck Tractor 6x2/4 MX 340 (10.05-.)		Center Bearing Support	538678
FTG 85.480							
12.58 (355 kw)	2001.01-2013.05		Centre	Truck Tractor 6x2/4 XE 355 C (01.01-.)		Center Bearing Support	538678
FTG 85.510							
12.9 (375 kw)	2005.10-2013.05		Centre	Truck Tractor 6x2/4 MX 375 (10.05-.)		Center Bearing Support	538678
FTP 85.340							
12.58 (250 kw)	2001.01-2013.05		Centre	Truck Tractor 6x2 XE 250 C		Center Bearing Support	538678
FTP 85.380							
12.58 (280 kw)	2001.01-2013.05		Centre	Truck Tractor 6x2 XE 280 C (01.01-.)		Center Bearing Support	538678
FTP 85.430							
12.58 (315 kw)	2001.01-2013.05		Centre	Truck Tractor 6x2 XE 315 C (01.01-.)		Center Bearing Support	538678
FTP 85.480							
12.58 (355 kw)	2001.01-2013.05		Centre	Truck Tractor 6x2 XF 355 M		Center Bearing Support	538678
FTR 85.360, FTS 85.360, FTP 85.360							
12.9 (265 kw)	2006.10-2013.05		Centre	Truck Tractor 6x2 MX 265 (10.06-.)		Center Bearing Support	538678
FTR 85.410, FTS 85.410, FTP 85.410							
12.9 (300 kw)	2005.10-2013.05		Centre	Truck Tractor 6x2 MX 300 (10.05-.)		Center Bearing Support	538678
FTR 85.460, FTS 85.460, FTP 85.460							
12.9 (340 kw)	2005.10-2013.05		Centre	Truck Tractor 6x2 MX 340 (10.05-.)		Center Bearing Support	538678
FTR 85.510, FTS 85.510, FTP 85.510							
12.9 (375 kw)	2005.10-2013.05		Centre	Truck Tractor 6x2 MX 375 (10.05-.)		Center Bearing Support	538678
FTR 95.380							
12.58 (280 kw)	2002.01-2006.12		Centre	Truck Tractor 6x2 XE 280 C		Center Bearing Support	538678
FTR 95.430							
12.58 (315 kw)	2002.01-2006.12		Centre	Truck Tractor 6x2 XE 315 C		Center Bearing Support	538678
FTR 95.480							
12.58 (355 kw)	2002.01-2006.12		Centre	Truck Tractor 6x2 XE 355 C		Center Bearing Support	538678
FTR 95.530							
12.58 (390 kw)	2002.09-2006.03		Centre	Truck Tractor 6x2 XE 390 C (09.02-.)		Center Bearing Support	538678
FTS 95.380							
12.58 (280 kw)	2002.01-2006.12		Centre	Truck Tractor 6x2 XE 280 C		Center Bearing Support	538678
FTS 95.430							
12.58 (315 kw)	2002.01-2006.12		Centre	Truck Tractor 6x2 XE 315 C		Center Bearing Support	538678
FTS 95.480							
12.58 (355 kw)	2002.01-2006.12		Centre	Truck Tractor 6x2 XE 355 C		Center Bearing Support	538678
FTS 95.530							
12.58 (390 kw)	2002.09-2006.03		Centre	Truck Tractor 6x2 XE 390 C (09.02-.)		Center Bearing Support	538678
FTT 95.380							
12.58 (280 kw)	2002.01-2006.03		Centre	Truck Tractor 6x4 XE 280 C		Center Bearing Support	538678
FTT 95.430							
12.58 (315 kw)	2002.01-2006.03		Centre	Truck Tractor 6x4 XE 315 C		Center Bearing Support	538678
FTT 95.480							
12.58 (355 kw)	2002.01-2006.03		Centre	Truck Tractor 6x4 XE 355 C		Center Bearing Support	538678
FTT 95.530							
12.58 (390 kw)	2002.09-2006.03		Centre	Truck Tractor 6x4 XE 390 C (09.02-.)		Center Bearing Support	538678
DAIHATSU							
Hijet							
1.0 (33 kw)	1992.12-1998.05	MT	Front	Van RWD CB41		Propshaft	PS900195
	1992.12-1998.05	MT	Front	Van RWD CB41		Propshaft	PS900196
	1992.12-1998.05	MT	Front	Van RWD CB41		Propshaft	PS900197
	1992.12-1998.05	MT	Front	Van RWD CB41		Propshaft	PS900198
	1992.12-1998.05	MT	Front	Van RWD CB41		Propshaft	PS900199
1.0 (35 kw)	1994.07-1998.05	MT	Front	Bus RWD CB42 (03.95-.)		Propshaft	PS900195
	1994.07-1998.05	MT	Front	Van RWD CB42 (03.95-.)		Propshaft	PS900195
	1994.07-1998.05	MT	Front	Bus RWD CB42 (03.95-.)		Propshaft	PS900196
	1994.07-1998.05	MT	Front	Van RWD CB42 (03.95-.)		Propshaft	PS900196
	1994.07-1998.05	MT	Front	Bus RWD CB42 (03.95-.)		Propshaft	PS900197
	1994.07-1998.05	MT	Front	Van RWD CB42 (03.95-.)		Propshaft	PS900197
	1994.07-1998.05	MT	Front	Bus RWD CB42 (03.95-.)		Propshaft	PS900198
	1994.07-1998.05	MT	Front	Van RWD CB42 (03.95-.)		Propshaft	PS900198

	YEAR	TRANSM.	FITTING POSITION	BODY STYLE & DRIVE TYPE & ENGINE	REMARKS	PRODUCT	GSP Ref.
DAIHATSU							
Hijet							
1.0 (35 kw)	1994.07-1998.05	MT	Front	Bus RWD CB42 (03.95-.)		Propshaft	PS900199
	1994.07-1998.05	MT	Front	Van RWD CB42 (03.95-.)		Propshaft	PS900199
Terios							
1.3 (61 kw)	1997.03-2000.09		Front	Terrain cab wagon closed 4WD HCEJ	Date from:1999.05,Date to:2000.04	Propshaft	PS900470
	1997.03-2000.09		Centre	Terrain cab wagon closed 4WD HCEJ		Center Bearing Support	539010
1.3 (63 kw)	2000.10-2002.09		Front	Terrain cab wagon closed 4WD K3VE		Propshaft	PS900470
	2000.10-2002.09		Centre	Terrain cab wagon closed 4WD K3VE		Center Bearing Support	539010
1.3 (103 kw)	2002.10-2005.10	4AT	Front	Terrain cab wagon closed 4WD K3VE		Propshaft	PS900470
DODGE							
Caliber							
2.4 (125 kw)	2006.02-2011.11	CVT	Rear	Hatchback 4WD ED3	Model year from:2007,Model year to:2008	Propshaft	PS900303
2.4 (223 kw)	2006.10-		Rear	Hatchback 4WD ED4	Model year from:2007,Model year to:2008	Propshaft	PS900303
Challenger							
3.5 (186 kw)	2009.01-2010.12	4AT/5AT	Rear	Coupe RWD EGG	Model year from:2009	Propshaft	PS901405
	2009.01-2010.12		Centre	Coupe RWD EGG		Center Bearing Support	538612
	2009.01-2010.12		Front;Rear	Coupe RWD EGG	5AT	Flexible Coupling	512678
	2009.01-2010.12		Front;Rear	Coupe RWD EGG		Flexible Coupling Kit	538514S
3.6 (227 kw)	2010.09-	AT	Rear	Coupe RWD ERB	Model year to:2014	Propshaft	PS901405
	2010.09-		Centre	Coupe RWD ERB		Center Bearing Support	538612
	2010.09-		Front;Rear	Coupe RWD ERB		Flexible Coupling Kit	538514S
	2011.01-	5AT	Front	Coupe RWD ERB	Model year from:2018	Propshaft	PS901409
	2011.01-	5AT	Rear	Coupe RWD ERB	Model year from:2018	Propshaft	PS901404
	2011.01-		Centre	Coupe RWD ERB		Center Bearing Support	538612
	2011.01-		Front;Rear	Coupe RWD ERB	5AT	Flexible Coupling	512678
	2011.01-		Front;Rear	Coupe RWD ERB		Flexible Coupling Kit	538514S
	2017.09-	AT	Front	Coupe 4WD ERB	Model year from:2018	Propshaft	PS901409
5.7 (277 kw)	2008.09-2014.12		Centre	Coupe RWD EZC/EZH		Center Bearing Support	538612
	2008.09-2014.12		Front;Rear	Coupe RWD EZC/EZH		Flexible Coupling	512677
	2008.09-2014.12		Front;Rear	Coupe RWD EZC/EZH		Flexible Coupling Kit	512677S
5.7 (280 kw)	2009.01-		Centre	Coupe RWD EZC/EZH		Center Bearing Support	538612
6.1 (317 kw)	2007.09-2010.12		Centre	Coupe RWD ESF		Center Bearing Support	538612
6.2 (527 kw)	2014.09-		Centre	Coupe RWD ESD		Center Bearing Support	538612
6.4 (346 kw)	2011.08-		Centre	Coupe RWD ESG		Center Bearing Support	538612
6.4 (351 kw)	2011.01-2014.12		Centre	Coupe RWD ESG/ESH		Center Bearing Support	538612
6.4 (362 kw)	2015.01-		Centre	Coupe RWD ESG/ESH		Center Bearing Support	538612
Charger							
2.7 (141 kw)	2006.04-2010.12	AT	Rear	Saloon RWD EER	Model year from:2007,Model year to:2008;for OE No.:4593681AA	Propshaft	PS901410
	2006.04-2010.12	AT	Rear	Saloon RWD EER	Model year from:2007;for OE No.:4593679AC	Propshaft	PS901411
	2006.04-2010.12		Centre	Saloon RWD EER		Center Bearing Support	538612
3.5 (186 kw)	2005.06-2010.12	AT	Front	Saloon 4WD EGJ	Model year from:2007	Propshaft	PS900193
	2005.06-2010.12	AT	Rear	Saloon RWD EGG	Model year from:2006,Model year to:2008;for OE No.:4593681AA	Propshaft	PS901410
	2005.06-2010.12	AT	Rear	Saloon RWD EGG	Model year from:2007,Model year to:2008;for OE No.:04593679AA	Propshaft	PS901411
	2005.06-2010.12	AT	Rear	Saloon 4WD EGJ	Model year from:2009,Model year to:2010	Propshaft	PS901509
	2005.06-2010.12		Centre	Saloon RWD EGG		Center Bearing Support	538612
3.6 (215 kw)	2012.01-2014.12	AT	Front	Saloon 4WD ERB		Propshaft	PS900193
	2012.01-2014.12	AT	Rear	Saloon 4WD ERB	For OE No.:4593860AE	Propshaft	PS901509
	2012.01-2014.12	AT	Rear	Saloon 4WD ERB	For OE No.:4593681AE	Propshaft	PS901511
	2012.01-2014.12		Centre	Saloon 4WD ERB		Center Bearing Support	538612
	2012.01-2018.12	AT	Front	Saloon RWD ERB	Model year from:2018	Propshaft	PS901409
	2012.01-2018.12	AT	Rear	Saloon RWD ERB	Model year from:2018;for OE No.:68212031AB	Propshaft	PS901408
	2012.01-2018.12	AT	Rear	Saloon RWD ERB	Model year from:2018;for OE No.:52123973AB	Propshaft	PS901459
	2012.01-2018.12		Centre	Saloon RWD ERB		Center Bearing Support	538612
3.6 (218 kw)	2011.01-	AT	Front	Saloon RWD ERB	Model year from:2018	Propshaft	PS901409
	2011.01-	AT	Rear	Saloon RWD ERB	Model year from:2018;for OE No.:68212031AB	Propshaft	PS901408
	2011.01-	AT	Rear	Saloon RWD ERB	Model year from:2018;for OE No.:52123973AB	Propshaft	PS901459
	2011.01-		Centre	Saloon RWD ERB		Center Bearing Support	538612
	2011.01-		Front;Rear	Saloon RWD ERB	5AT	Flexible Coupling	512678
	2011.01-		Front;Rear	Saloon RWD ERB		Flexible Coupling Kit	538514S
	2011.01-2014.12	AT	Front	Saloon 4WD ERB	Model year from:2018	Propshaft	PS901409
	2011.01-2014.12	AT	Rear	Saloon 4WD ERB	Model year from:2018	Propshaft	PS901408
	2011.01-2014.12		Centre	Saloon 4WD ERB		Center Bearing Support	538612
	2011.01-2014.12		Front;Rear	Saloon 4WD ERB		Flexible Coupling Kit	538514S
	2011.09-		Centre	Saloon RWD ERB		Center Bearing Support	538612
	2011.09-		Centre	Saloon 4WD ERB		Center Bearing Support	538612

	YEAR	TRANSM.	FITTING POSITION	BODY STYLE & DRIVE TYPE & ENGINE	REMARKS	PRODUCT	GSP Ref.
DODGE							
Charger							
3.6 (218 kw)	2011.09-		Front;Rear	Saloon RWD ERB		Flexible Coupling Kit	538514S
3.6 (224 kw)	2018.01-		Centre	Saloon RWD ERB		Center Bearing Support	538612
	2018.09-		Centre	Saloon RWD ERB		Center Bearing Support	538612
	2018.09-		Centre	Saloon 4WD ERB		Center Bearing Support	538612
3.6 (227 kw)	2017.09-		Centre	Saloon RWD ERB		Center Bearing Support	538612
5.7 (254 kw)	2006.09-2008.12	AT	Front	Saloon 4WD EZB	Model year from:2007	Propshaft	PS900193
5.7 (272 kw)	2012.06-	AT	Front	Saloon RWD EZH	Model year from:2015,Model year to:2020	Propshaft	PS901409
	2012.06-	5AT	Rear	Saloon RWD EZH	Date to:2014.12	Propshaft	PS901787
	2012.06-	AT	Rear	Saloon RWD EZH	Model year from:2015,Model year to:2020	Propshaft	PS901408
	2012.06-		Centre	Saloon RWD EZH		Center Bearing Support	538612
5.7 (276 kw)	2008.09-2010.12	AT	Front	Saloon 4WD EZD, EZH		Propshaft	PS900193
	2010.09-2014.12		Centre	Saloon RWD EZH		Center Bearing Support	538612
	2011.01-	AT	Front	Saloon 4WD EZH	Model year to:2014	Propshaft	PS900193
	2011.01-	AT	Front	Saloon RWD EZH	Model year from:2015,Model year to:2020	Propshaft	PS901409
	2011.01-	AT	Front	Saloon 4WD EZH	Model year from:2015,Model year to:2020	Propshaft	PS901409
	2011.01-	5AT	Rear	Saloon 4WD EZH	Model year to:2014	Propshaft	PS901510
	2011.01-	AT	Rear	Saloon RWD EZH	Model year from:2015,Model year to:2020	Propshaft	PS901408
	2011.01-	AT	Rear	Saloon 4WD EZH	Model year from:2015,Model year to:2020	Propshaft	PS901408
	2011.01-		Centre	Saloon RWD EZH		Center Bearing Support	538612
	2011.01-		Centre	Saloon 4WD EZH		Center Bearing Support	538612
	2011.01-		Front;Rear	Saloon RWD EZH		Flexible Coupling	512677
	2011.01-		Front;Rear	Saloon 4WD EZH		Flexible Coupling	512677
	2011.01-		Front;Rear	Saloon RWD EZH		Flexible Coupling Kit	512677S
	2011.01-		Front;Rear	Saloon 4WD EZH		Flexible Coupling Kit	512677S
	2011.11-		Centre	Saloon 4WD EZH		Center Bearing Support	538612
6.1 (317 kw)	2005.09-2010.12		Centre	Saloon RWD ESF		Center Bearing Support	538612
6.2 (527 kw)	2015.01-		Centre	Saloon RWD ESD		Center Bearing Support	538612
6.4 (351 kw)	2012.01-2014.12		Centre	Saloon RWD ESG		Center Bearing Support	538612
6.4 (362 kw)	2015.01-		Centre	Saloon RWD ESG		Center Bearing Support	538612
Dakota							
3.7 (157 kw)	2003.10-	AT	Front	Pickup 4WD EKG	Model year from:2007	Propshaft	PS900202
	2003.10-	AT	Front	Pickup 4WD EKG	Model year to:2007	Propshaft	PS900221
	2003.10-	AT	Rear	Pickup RWD EKG	For Model year:2004	Propshaft	PS900200
	2003.10-	AT	Rear	Pickup RWD EKG	Model year from:2005,Model year to:2011;Two Piece Shaft	Propshaft	PS900201
	2003.10-	AT	Rear	Pickup 4WD EKG	Model year from:2007,Model year to:2011	Propshaft	PS901403
	2003.10-	AT	Rear	Pickup RWD EKG	Model year from:2007,Model year to:2011;One Piece Shaft	Propshaft	PS901403
	2004.09-2010.12	AT	Front	Pickup 4WD EKG	Model year from:2007	Propshaft	PS900202
	2004.09-2010.12	AT	Rear	Pickup RWD EKG	Model year from:2005	Propshaft	PS900201
3.9 (128 kw)	1995.10-2004.09	AT	Front	Pickup 4WD MAGNUMV6	Model year from:2001;for OE No.:52105982AC	Propshaft	PS900220
	1995.10-2004.09	AT	Front	Pickup 4WD MAGNUMV6	Model year from:2001;for OE No.:52105981AC	Propshaft	PS900221
	1995.10-2004.09	AT	Rear	Pickup 4WD MAGNUMV6	Model year from:2001	Propshaft	PS901403
	1995.10-2004.09	AT	Rear	Pickup RWD MAGNUMV6	Model year from:2001	Propshaft	PS901403
4.7 (172 kw)	2000.10-2003.09	AT	Front	Pickup 4WD EVA	For Model year:2000	Propshaft	PS900203
	2000.10-2003.09	AT	Front	Pickup 4WD EVA	Model year from:2001;for OE No.:52105982AC	Propshaft	PS900220
	2000.10-2003.09	AT	Front	Pickup 4WD EVA	Model year from:2001;for OE No.:52105981AC	Propshaft	PS900221
	2003.10-	AT	Rear	Pickup RWD EVA	Model year to:2007	Propshaft	PS901403
	2004.10-2011.12	MT	Front	Pickup 4WD EVA	Model year to:2007;for OE No.:52105982AC	Propshaft	PS900220
	2004.10-2011.12	MT	Front	Pickup 4WD EVA	Model year to:2004;for OE No.:52105981AC	Propshaft	PS900221
	2004.10-2011.12	AT	Rear	Pickup 4WD EVA	Model year to:2007	Propshaft	PS901403
4.7 (190 kw)	2004.10-	AT	Front	Pickup 4WD EVC	Model year to:2007	Propshaft	PS900220
	2004.10-	AT	Rear	Pickup 4WD EVC	Model year to:2007	Propshaft	PS901403
Dakota Crew Cab Pickup							
4.7 (172 kw)	1999.09-2004.12	AT	Front	Pickup 4WD EVC	For Model year:2000	Propshaft	PS900203
Dakota Extended Cab							
4.7 (172 kw)	1999.09-2004.12	AT	Front	Pickup 4WD EVC	For Model year:2000	Propshaft	PS900203
Dakota Standard Cab Pickup							
3.7 (157 kw)	2003.09-2004.12	5MT	Rear	Pickup RWD EKG		Propshaft	PS901400
4.7 (172 kw)	1999.09-2004.12	5MT	Rear	Pickup RWD EVC	Model year from:2001	Propshaft	PS901400
Durango							
3.6 (216 kw)	2010.12-	AT	Front	SUV 4WD ERB	Model year from:2011,Model year to:2023;for OE No.:52853642AF	Propshaft	PS901378
	2010.12-	AT	Front	SUV 4WD ERB	Model year from:2011,Model year to:2013;for OE No.:52853641AF	Propshaft	PS901379
	2010.12-	AT	Rear	SUV 4WD ERB	Model year from:2011,Model year to:2011;215MM	Propshaft	PS901456
	2010.12-	AT	-	SUV 4WD ERB	Model year from:2011,Model year to:2023	Joint,propshaft	605140
	2010.12-	AT	-	SUV 4WD ERB	Model year from:2011,Model year to:2013;for OE No.:52853641AD	Joint,propshaft	605143

	YEAR	TRANSM.	FITTING POSITION	BODY STYLE & DRIVE TYPE & ENGINE	REMARKS	PRODUCT	GSP Ref.
DODGE							
Durango							
3.6 (216 kw)	2011.01-	AT	Front	SUV 4WD ERB	Model year to:2023;for OE No.:52853642AF	Propshaft	PS901378
	2011.01-	AT	Front	SUV RWD ERB	Model year to:2013;for OE No.:52853641AF	Propshaft	PS901379
	2011.01-	AT	Front	SUV 4WD ERB	Model year to:2013;for OE No.:52853641AF	Propshaft	PS901379
	2011.01-	AT	Rear	SUV RWD ERB	Model year from:2017	Propshaft	PS901454
	2011.01-	AT	-	SUV RWD ERB	Model year to:2023;for OE No.:52853642AD	Joint,propshaft	605140
	2011.01-	AT	-	SUV 4WD ERB	Model year to:2023;for OE No.:52853642AD	Joint,propshaft	605140
	2011.01-	AT	-	SUV RWD ERB	Model year to:2013;for OE No.:52853641AD	Joint,propshaft	605143
	2011.01-	AT	-	SUV 4WD ERB	Model year to:2013;for OE No.:52853641AD	Joint,propshaft	605143
	2011.01-2013.12	AT	Front	SUV RWD ERB	Model year from:2011,Model year to:2013;for OE No.:52853641AF	Propshaft	PS901379
	2011.01-2013.12	AT	Rear	SUV RWD ERB	Model year from:2014,Model year to:2017	Propshaft	PS901454
	2011.01-2013.12	AT	Rear	SUV RWD ERB	Model year from:2011,Model year to:2013;230MM	Propshaft	PS901455
	2011.01-2013.12	AT	Rear	SUV RWD ERB	Model year from:2011,Model year to:2011;215MM	Propshaft	PS901456
	2011.01-2013.12	AT	-	SUV RWD ERB	Model year from:2011,Model year to:2023;for OE No.:52853642AD	Joint,propshaft	605140
	2011.01-2013.12	AT	-	SUV RWD ERB	Model year from:2011,Model year to:2013;for OE No.:52853641AD	Joint,propshaft	605143
3.6 (220 kw)	2013.09-	AT	Front	SUV 4WD ERB	Model year to:2023	Propshaft	PS901378
	2013.09-	AT	-	SUV 4WD ERB	Model year to:2023	Joint,propshaft	605140
3.7 (157 kw)	2003.11-2008.12	4AT	Rear	SUV RWD EKG	Model year from:2008,Model year to:2009	Propshaft	PS901406
4.7 (172 kw)	2003.11-2008.12	4AT	Front	SUV 4WD EVA	Model year from:2006,Model year to:2008	Propshaft	PS901407
	2003.11-2008.12	4AT	Rear	SUV RWD EVA		Propshaft	PS901406
4.7 (175 kw)	1999.10-2003.10	4AT	Front	SUV 4WD EVA	Model year from:2001	Propshaft	PS900220
	1999.10-2003.10	AT	Front	SUV 4WD EVA	For Model year:2000	Propshaft	PS900203
4.7 (226 kw)	2008.01-2008.12	AT	Front	SUV 4WD EVE	for OE No.:52123197AB	Propshaft	PS900218
	2008.01-2008.12	AT	Front	SUV 4WD EVE	for OE No.:52123196AA	Propshaft	PS901407
	2008.01-2008.12	AT	Rear	SUV 4WD EVE		Propshaft	PS900194
5.2 (172 kw)	1997.12-1999.09	AT	Front	SUV 4WD ELF	For Model year:2000	Propshaft	PS900203
5.7 (250 kw)	2003.09-2009.12	AT	Front	SUV 4WD EZA, EZB, EZD	Model year from:2004;for OE No.:52123197AB	Propshaft	PS900218
	2003.09-2009.12	AT	Front	SUV 4WD EZA, EZB, EZD	Model year from:2006;for OE No.:52123196AA	Propshaft	PS901407
	2003.09-2009.12	AT	Rear	SUV 4WD EZA, EZB, EZD		Propshaft	PS900194
	2003.09-2009.12	AT	Rear	SUV RWD EZA, EZB, EZD		Propshaft	PS901406
5.7 (257 kw)	2003.11-2008.12	4AT	Front	SUV 4WD EZA	Model year from:2006;for OE No.:52123196AA	Propshaft	PS901407
	2003.11-2008.12	AT	Front	SUV 4WD EZA	Model year from:2004,Model year to:2009;for OE No.:52123197AB	Propshaft	PS900218
5.7 (268 kw)	2011.01-	AT	Front	SUV RWD EZH	Model year to:2023	Propshaft	PS901379
	2011.01-	AT	Front	SUV 4WD EZH	Model year to:2023	Propshaft	PS901379
	2011.01-	AT	-	SUV RWD EZH	Model year to:2023	Joint,propshaft	605143
	2011.01-	AT	-	SUV 4WD EZH	Model year to:2023	Joint,propshaft	605143
Journey							
3.5 (173 kw)	2008.06-2010.12	AT	Rear	MPV 4WD EGF	Model year from:2009	Propshaft	PS901399
3.6 (211 kw)	2011.01-	AT	Rear	MPV 4WD ERB	Model year to:2019	Propshaft	PS901399
Magnum							
2.7 (142 kw)	2005.01-2008.12	4AT/5AT	Rear	Estate RWD EER		Propshaft	PS901411
3.5 (187 kw)	2007.01-2008.12	4AT	Rear	Estate RWD EGG	Model year from:2007	Propshaft	PS901411
5.7 (254 kw)	2004.06-2005.12	5AT	Front	Estate 4WD EZB		Propshaft	PS900193
Nitro							
3.7 (151 kw)	2006.10-2012.04	4AT	Front	SUV 4WD EKG	Model year to:2011	Propshaft	202522
	2006.10-2012.04	AT	-	SUV 4WD EKG	Model year to:2008	Joint,propshaft	699199
4.0 (194 kw)	2007.09-2011.12	4AT	Front	SUV 4WD EGS	For Model year:2008	Propshaft	202522
	2007.09-2011.12	AT	-	SUV 4WD EGS		Joint,propshaft	699199
Ram 1500							
3.7 (157 kw)	2001.06-2008.09	8AT	Rear	Pickup RWD EKG	Model year from:2004,Model year to:2005	Propshaft	PS900206
	2001.06-2008.09	AT	Rear	Pickup RWD EKG	Model year from:2006	Propshaft	PS900208
	2001.06-2008.09		Front	Pickup RWD EKG		Joint,propshaft	808078
3.7 (160 kw)	2001.09-2008.12	AT	Front	Pickup 4WD EKG		Propshaft	201406
	2001.09-2008.12	AT	Rear	Pickup RWD EKG	Model year from:2004,Model year to:2005	Propshaft	PS900206
	2001.09-2008.12	AT	Rear	Pickup 4WD EKG	Model year from:2002,Model year to:2004	Propshaft	PS901451
	2001.09-2008.12		Front	Pickup 4WD EKG		Joint,propshaft	808078
	2008.09-2010.12	6AT	Rear	Pickup RWD EKG	Model year to:2010	Propshaft	PS901397
3.7 (163 kw)	2001.09-2008.12	AT	Rear	Pickup 4WD EKG	Model year from:2002,Model year to:2004	Propshaft	PS901451
	2001.09-2008.12		Front	Pickup 4WD EKG		Joint,propshaft	808078
4.7 (172 kw)	2001.06-2008.09	AT	Front	Pickup 4WD EVA		Propshaft	201406
	2001.06-2008.09	AT	Rear	Pickup RWD EVA	Model year from:2004,Model year to:2005	Propshaft	PS900206
	2001.06-2008.09	AT	Rear	Pickup 4WD EVA	Model year from:2002,Model year to:2004	Propshaft	PS901451
	2001.06-2008.09		-	Pickup 4WD EVA		Joint,propshaft	801349
4.7 (175 kw)	2001.09-2007.12	AT	Rear	Pickup 4WD EVA	Model year from:2002,Model year to:2004	Propshaft	PS901451
	2001.09-2007.12		Front	Pickup 4WD EVA		Joint,propshaft	808078

	YEAR	TRANSM.	FITTING POSITION	BODY STYLE & DRIVE TYPE & ENGINE	REMARKS	PRODUCT	GSP Ref.
DODGE							
Ram 1500							
4.7 (175 kw)	2005.09-2007.12		Front	Pickup 4WD EVA		Joint,propshaft	808078
4.7 (230 kw)	2008.10-2012.12		-	Pickup 4WD EVC		Joint,propshaft	801349
5.2 (164 kw)	1994.01-2001.12	MT	Front	Pickup 4WD ELF	Model year from:2000	Propshaft	PS900211
5.2 (172 kw)	1993.01-2001.05	MT	Front	Pickup 4WD ELF	Model year from:2000	Propshaft	PS900211
5.7 (254 kw)	2003.01-2008.12	AT	Front	Pickup 4WD EZB		Propshaft	201406
	2003.01-2008.12		Front	Pickup 4WD EZB		Joint,propshaft	808078
5.7 (257 kw)	2008.10-2011.12	AT	Front	Pickup 4WD EZA	Model year to:2010	Propshaft	201406
	2008.10-2011.12		-	Pickup 4WD EZA		Joint,propshaft	801349
5.9 (180 kw)	2001.06-2008.09	AT	Rear	Pickup 4WD EML	Model year from:2002,Model year to:2004	Propshaft	PS901451
	2001.06-2008.09		-	Pickup 4WD EML		Joint,propshaft	801349
5.9 (184 kw)	1993.01-2001.09	MT	Front	Pickup 4WD EML	Model year from:2000	Propshaft	PS900211
RAM 1500 Crew Cab Pickup							
4.7 (175 kw)	2001.09-2007.12	AT	Rear	Pickup RWD EVA	Model year from:2004,Model year to:2005	Propshaft	PS900206
Ram 1500 Crew Cab Pickup							
5.7 (257 kw)	2002.09-2007.12	AT	Rear	Pickup RWD EZB	Model year from:2004,Model year to:2005	Propshaft	PS900206
RAM 1500 Crew Cab Pickup							
5.7 (257 kw)	2002.09-2008.12	AT	Front	Pickup 4WD EZB		Propshaft	201406
	2002.09-2008.12		Front	Pickup 4WD EZB		Joint,propshaft	808078
Ram 1500 Crew Cab Pickup							
5.9 (183 kw)	2001.09-2003.12		Front	Pickup 4WD EML		Joint,propshaft	808078
RAM 1500 Crew Cab Pickup							
8.3 (373 kw)	2004.09-2006.12		Front	Pickup RWD EWC		Joint,propshaft	808078
Ram 1500 Extended Cab Pickup							
4.7 (231 kw)	2008.09-2010.12	AT	Front	Pickup 4WD EVC		Propshaft	201406
RAM 1500 Pickup							
4.7 (175 kw)	2001.08-2008.09	AT	Front	Pickup 4WD EVC		Propshaft	201406
	2001.08-2008.09	AT	Rear	Pickup 4WD EVC	Model year from:2002,Model year to:2004	Propshaft	PS901451
	2001.08-2008.09		Front	Pickup 4WD EVC		Joint,propshaft	808078
	2001.08-2008.09		-	Pickup 4WD EVC		Joint,propshaft	801349
Ram 1500 Standard Cab Pickup							
5.7 (291 kw)	2008.09-2010.12	AT	Front	Pickup 4WD EZE, EZH		Propshaft	201406
	2008.09-2010.12	6AT	Rear	Pickup RWD EZD, EZE, EZH	Model year to:2010	Propshaft	PS901397
5.9 (183 kw)	2001.09-2003.12		Front	Pickup 4WD EML		Joint,propshaft	808078
Ram 2500							
5.2 (172 kw)	1993.01-2001.05	MT	Front	Pickup 4WD ELF		Propshaft	PS901452
5.9 (154 kw)	1996.10-2001.05	AT	Front	Pickup 4WD ETC	Model year from:2001	Propshaft	PS901398
5.9 (175 kw)	1997.09-2001.12	AT	Front	Pickup 4WD ETC	Model year from:2001	Propshaft	PS901398
5.9 (180 kw)	2001.06-2008.09	5MT	Front	Pickup 4WD ETC	Model year from:2006	Propshaft	PS901448
	2001.06-2008.09	6MT	Front	Pickup 4WD ETC	Model year from:2003,Model year to:2005;for OE No.:52105932AG	Propshaft	PS901449
	2001.06-2008.09	AT	Front	Pickup 4WD ETC		Propshaft	PS900204
	2001.06-2008.09	MT	Front	Pickup 4WD ETC	For Model year:2005;for OE No.:52853143AE	Propshaft	PS900212
5.9 (184 kw)	1993.01-2001.09	AT	Front	Pickup 4WD EML	Model year from:2001	Propshaft	PS901398
5.9 (243 kw)	2003.06-2008.09	5MT	Front	Pickup 4WD ETH	Model year from:2006	Propshaft	PS901448
	2003.06-2008.09	6MT	Front	Pickup 4WD ETH	Model year from:2003,Model year to:2005;for OE No.:52105932AG	Propshaft	PS901449
	2003.06-2008.09	AT	Front	Pickup 4WD ETH		Propshaft	PS900204
	2003.06-2008.09	MT	Front	Pickup 4WD ETH	For Model year:2005;for OE No.:52853143AE	Propshaft	PS900212
	2003.09-2005.12	AT	Front	Pickup 4WD ETH		Propshaft	PS900204
	2003.09-2005.12	MT	Front	Pickup 4WD ETH	For Model year:2005	Propshaft	PS900212
	2005.09-2007.12	AT	Front	Pickup 4WD ETH		Propshaft	PS900204
Ram 2500 Cab & Chassis							
5.7 (257 kw)	2002.09-2005.12	5MT	Front	Pickup 4WD EZA	Model year from:2006	Propshaft	PS901448
	2002.09-2005.12	AT	Front	Pickup 4WD EZA	Model year to:2006	Propshaft	PS900215
	2002.09-2005.12	MT	Front	Pickup 4WD EZA	For Model year:2005	Propshaft	PS900212
Ram 2500 Crew Cab Pickup							
6.7 (260 kw)	2006.09-2008.12	AT	Front	Pickup 4WD ETJ		Propshaft	PS900204
RAM 2500 Extended Cab Pickup							
5.9 (172 kw)	1994.09-1997.12	MT	Front	Pickup 4WD EML		Propshaft	PS901452
Ram 2500 Standard Cab Pickup							
5.9 (175 kw)	1997.09-2000.12	AT	Front	Pickup 4WD ETC	Model year to:2002	Propshaft	PS901398
	1997.09-2000.12	MT	Front	Pickup 4WD ETC	Model year to:1998	Propshaft	PS901452
RAM 2500 Standard Cab Pickup							
6.7 (260 kw)	2008.09-2010.12	AT	Front	Pickup 4WD ETJ		Propshaft	PS900204

	YEAR	TRANSM.	FITTING POSITION	BODY STYLE & DRIVE TYPE & ENGINE	REMARKS	PRODUCT	GSP Ref.
DODGE							
Ram 3500							
5.7 (246 kw)	2002.09-2008.12	6MT	Front	Pickup 4WD EZA	Model year from:2006	Propshaft	PS901448
	2002.09-2008.12	AT	Front	Pickup 4WD EZA	Model year from:2003,Model year to:2006	Propshaft	PS900215
	2002.09-2008.12	MT	Front	Pickup 4WD EZA	For Model year:2005	Propshaft	PS900212
	2004.04-2008.09	5MT	Front	Pickup 4WD EZA	Model year from:2006	Propshaft	PS901448
	2004.04-2008.09	AT	Front	Pickup 4WD EZA	Model year to:2006	Propshaft	PS900215
	2004.04-2008.09	MT	Front	Pickup 4WD EZA	For Model year:2005	Propshaft	PS900212
	2005.09-2008.12	5MT	Front	Pickup 4WD EZA	Model year from:2006	Propshaft	PS901448
	2005.09-2008.12	AT	Front	Pickup 4WD EZA	Model year to:2006	Propshaft	PS900215
5.7 (257 kw)	2001.06-2008.12	5MT	Front	Pickup 4WD EZA	Model year from:2006	Propshaft	PS901448
	2001.06-2008.12	AT	Front	Pickup 4WD EZA	Model year from:2003,Model year to:2006	Propshaft	PS900215
	2001.06-2008.12	MT	Front	Pickup 4WD EZA	For Model year:2005	Propshaft	PS900212
5.9 (154 kw)	1996.10-2001.05	AT	Front	Pickup 4WD ETC	Model year from:2001	Propshaft	PS901398
5.9 (172 kw)	1994.09-1997.12	MT	Front	Pickup 4WD 9C		Propshaft	PS901452
	2001.06-2008.09	5MT	Front	Pickup 4WD ETC	Model year from:2006	Propshaft	PS901448
	2001.06-2008.09	6MT	Front	Pickup 4WD ETC	Model year from:2003,Model year to:2005;for OE No.:52105932AG	Propshaft	PS901449
	2001.06-2008.09	AT	Front	Pickup 4WD ETC		Propshaft	PS900204
	2001.06-2008.09	MT	Front	Pickup 4WD ETC	For Model year:2005;for OE No.:52853143AE	Propshaft	PS900212
5.9 (180 kw)	2001.06-2008.09	5MT	Front	Pickup 4WD ETC	Model year from:2006	Propshaft	PS901448
	2001.06-2008.09	6MT	Front	Pickup 4WD ETC	Model year from:2003,Model year to:2005;for OE No.:52105932AG	Propshaft	PS901449
	2001.06-2008.09	AT	Front	Pickup 4WD ETC		Propshaft	PS900204
	2001.06-2008.09	MT	Front	Pickup 4WD ETC	For Model year:2005;for OE No.:52853143AE	Propshaft	PS900212
5.9 (184 kw)	1993.01-2001.09	AT	Front	Pickup 4WD EML	Model year from:2001	Propshaft	PS901398
8.0 (224 kw)	1994.09-2000.12	MT	Front	Pickup 4WD EWA	Model year to:1998	Propshaft	PS901452
8.0 (228 kw)	2001.09-2008.12	AT	Front	Pickup 4WD EWA	Model year to:2002	Propshaft	PS901398
Ram Van							
3.9 (128 kw)	1993.08-2003.09	3AT	Rear	Van RWD EHC	Model year from:2000	Propshaft	PS901396
Sprinter 2500							
2.7 (115 kw)	2003.09-2006.12	AT	Rear	Van RWD EX8		Propshaft	PS900549
	2003.09-2006.12	AT	Rear	Platform/Chassis RWD EX8		Propshaft	PS900549
3.0 (115 kw)	2006.09-2009.12	5AT	Rear	Van RWD EXM		Propshaft	PS901368
Sprinter 3500							
2.7 (115 kw)	2002.09-2006.12	AT	Rear	Van RWD EX8		Propshaft	PS900549
	2005.01-2006.12	AT	Rear	Platform/Chassis RWD EX8		Propshaft	PS900549
3.0 (115 kw)	2006.09-2009.12	5AT	Front	Van RWD EXM	Wheelbase:4325 mm	Propshaft	PS901444
	2006.09-2009.12	5AT	Front	Platform/Chassis RWD EXM	Wheelbase:4325 mm	Propshaft	PS901444
	2006.09-2009.12	5AT	Rear	Van RWD EXM	Wheelbase:4325 mm,two parts	Propshaft	PS901369
	2006.09-2009.12	5AT	Rear	Platform/Chassis RWD EXM	Wheelbase:4325 mm,two parts	Propshaft	PS901369
	2006.09-2009.12	5AT	Rear	Van RWD EXM	Wheelbase:4325 mm,three parts	Propshaft	PS901445
	2006.09-2009.12	5AT	Rear	Platform/Chassis RWD EXM	Wheelbase:4325 mm,three parts	Propshaft	PS901445
3.5 (189 kw)	2006.09-2008.12	5AT	Rear	Platform/Chassis RWD EG2		Propshaft	PS901368
FIAT							
500X							
2.0 (100 kw)	2014.09-2018.09		Rear	SUV 4WD 55263087/55263088/55283099		Propshaft	PS900623
2.0 (103 kw)	2014.09-2018.09		Rear	SUV 4WD 55263087/55263088		Propshaft	PS900623
2.0 (110 kw)	2018.09-2020.09	AT	Rear	SUV 4WD 55263088		Propshaft	PS900623
Panda							
0.9 (63 kw)	2012.02-		-	Hatchback FWD 312A2000		Joint,propshaft	635064
	2012.09-	MT	Rear	Hatchback 4WD 312A2000		Propshaft	PS900222
	2012.09-	MT	-	Hatchback 4WD 312A2000		Joint,propshaft	635064
	2012.09-		Centre	Hatchback 4WD 312A2000		Center Bearing Support	538641
0.9 (66 kw)	2014.06-	MT	Rear	Hatchback 4WD 312A7000		Propshaft	PS900222
	2014.06-	MT	-	Hatchback 4WD 312A7000		Joint,propshaft	635064
	2014.06-		Centre	Hatchback 4WD 312A7000		Center Bearing Support	538641
1.1 (37 kw)	1991.05-1995.03		Front;Rear	Hatchback 4WD 156C046		Center Bearing Support	539039
1.1 (40 kw)	1995.04-2004.07		Front;Rear	Hatchback 4WD 176B2000/187A1000		Center Bearing Support	539039
1.2 (44 kw)	2004.08-2012.12	MT	Rear	Hatchback 4WD 188A4000	Date to:2012.12	Propshaft	PS900222
	2004.08-2012.12		-	Hatchback 4WD 188A4000		Joint,propshaft	635064
	2004.08-2012.12		Centre	Hatchback 4WD 188A4000		Center Bearing Support	538641
1.2 (51 kw)	2010.03-2012.12	5MT	-	Hatchback FWD 169A4000		Joint,propshaft	635064
	2010.04-2012.12	MT	Rear	Hatchback 4WD 169A4000	Date to:2012.12	Propshaft	PS900222
	2010.04-2012.12		-	Hatchback 4WD 169A4000		Joint,propshaft	635064
	2010.04-2012.12		Centre	Hatchback 4WD 169A4000		Center Bearing Support	538641
1.3 (51 kw)	2004.08-2012.12	MT	Rear	Hatchback 4WD 188A8000	Date to:2012.12	Propshaft	PS900222
	2004.08-2012.12		-	Hatchback 4WD 188A8000		Joint,propshaft	635064

	YEAR	TRANSM.	FITTING POSITION	BODY STYLE & DRIVE TYPE & ENGINE	REMARKS	PRODUCT	GSP Ref.
FIAT							
Panda							
1.3 (51 kw)	2004.08-2012.12		Centre	Hatchback 4WD 188A8000		Center Bearing Support	538641
1.3 (55 kw)	2010.09-2012.12	MT	Rear	Hatchback 4WD 169A1000	Date to:2012.12	Propshaft	PS900222
	2010.09-2012.12		-	Hatchback 4WD 169A1000		Joint,propshaft	635064
	2010.09-2012.12		Centre	Hatchback 4WD 169A1000		Center Bearing Support	538641
	2012.06-	MT	Rear	Hatchback 4WD 199A9000		Propshaft	PS900222
	2012.06-	MT	-	Hatchback 4WD 199A9000		Joint,propshaft	635064
	2012.06-		Centre	Hatchback 4WD 199A9000		Center Bearing Support	538641
1.3 (59 kw)	2014.06-	MT	Rear	Hatchback 4WD 312A8000		Propshaft	PS900222
	2014.06-		-	Hatchback 4WD 312A8000		Joint,propshaft	635064
	2014.06-		Centre	Hatchback 4WD 312A8000		Center Bearing Support	538641
1.3 (70 kw)	2015.04-	MT	Rear	Hatchback 4WD 312B1000		Propshaft	PS900222
	2015.04-		Centre	Hatchback 4WD 312B1000		Center Bearing Support	538641
Panda Classic							
1.2 (51 kw)	2012.01-2013.08	MT	Rear	Hatchback 4WD 169A4000	Date from:2012.01	Propshaft	PS900222
	2012.01-2013.08		-	Hatchback 4WD 169A4000		Joint,propshaft	635064
	2012.01-2013.08	5MT	-	Hatchback FWD 169A4000		Joint,propshaft	635064
	2012.01-2013.08		Centre	Hatchback 4WD 169A4000		Center Bearing Support	538641
1.3 (55 kw)	2012.01-2013.08	MT	Rear	Hatchback 4WD 169A5000	Date from:2012.01	Propshaft	PS900222
	2012.01-2013.08		-	Hatchback 4WD 169A5000		Joint,propshaft	635064
	2012.01-2013.08		Centre	Hatchback 4WD 169A5000		Center Bearing Support	538641
Panda Van							
0.9 (63 kw)	2012.02-		Centre	Hatchback Van FWD 312A2000		Center Bearing Support	538641
	2013.01-	MT	Rear	Hatchback Van 4WD 312A2000	Date from:2013.01	Propshaft	PS900222
	2013.01-	MT	-	Hatchback Van 4WD 312A2000		Joint,propshaft	635064
1.2 (44 kw)	2004.09-2012.12	MT	Rear	Hatchback Van 4WD 188A4000	Date to:2012.12	Propshaft	PS900222
	2004.09-2012.12		-	Hatchback Van 4WD 188A4000		Joint,propshaft	635064
	2004.09-2012.12		Centre	Hatchback Van 4WD 188A4000		Center Bearing Support	538641
1.2 (51 kw)	2010.09-2012.12	MT	Rear	Hatchback Van 4WD 169A4000	Date to:2012.12	Propshaft	PS900222
	2010.09-2012.12		-	Hatchback Van 4WD 169A4000		Joint,propshaft	635064
	2010.09-2012.12		Centre	Hatchback Van 4WD 169A4000		Center Bearing Support	538641
1.3 (51 kw)	2004.03-2012.12	MT	Rear	Hatchback Van 4WD 188A8000		Propshaft	PS900222
	2004.03-2012.12		-	Hatchback Van 4WD 188A8000		Joint,propshaft	635064
	2004.03-2012.12		Centre	Hatchback Van 4WD 188A8000		Center Bearing Support	538641
1.3 (55 kw)	2006.06-2012.12	MT	Rear	Hatchback Van 4WD 169A1000	Date from:2006.06 to 2012.12	Propshaft	PS900222
	2006.06-2012.12		-	Hatchback Van 4WD 169A1000		Joint,propshaft	635064
	2006.06-2012.12		Centre	Hatchback Van 4WD 169A1000		Center Bearing Support	538641
	2013.01-	MT	Rear	Hatchback Van 4WD 199A9000	Date from:2013.01	Propshaft	PS900222
	2013.01-	MT	-	Hatchback Van 4WD 199A9000		Joint,propshaft	635064
	2013.01-		Centre	Hatchback Van 4WD 199A9000		Center Bearing Support	538641
1.3 (59 kw)	2015.05-	MT	Rear	Hatchback Van 4WD 225A2000	Date from:2015.05	Propshaft	PS900222
	2015.05-		Centre	Hatchback Van 4WD 225A2000		Center Bearing Support	538641
FORD							
Consul							
1.7 (48 kw)	1972.02-1975.08	MT	Rear	Saloon RWD TV17L	Wheel Side,Transmission End,Rear Axle Left and Right	Joint,propshaft	618001
	1972.02-1975.08	MT	Rear	Coupe RWD TV17L	Wheel Side,Transmission End,Rear Axle Left and Right	Joint,propshaft	618001
	1972.02-1975.08	MT	Rear	Estate RWD TV17L	Wheel Side,Transmission End,Rear Axle Left and Right	Joint,propshaft	618001
1.7 (55 kw)	1972.02-1975.12	MT	Rear	Saloon RWD TV17HC	Wheel Side,Transmission End,Rear Axle Left and Right	Joint,propshaft	618001
	1972.02-1975.12	MT	Rear	Coupe RWD TV17HC	Wheel Side,Transmission End,Rear Axle Left and Right	Joint,propshaft	618001
	1972.02-1975.12	MT	Rear	Estate RWD TV17HC	Wheel Side,Transmission End,Rear Axle Left and Right	Joint,propshaft	618001
2.0 (66 kw)	1974.09-1975.12	MT	Rear	Saloon RWD TV20HKL	Wheel Side,Transmission End,Rear Axle Left and Right	Joint,propshaft	618001
2.0 (73 kw)	1972.02-1975.08	MT	Rear	Saloon RWD TL20NE	Wheel Side,Transmission End,Rear Axle Left and Right	Joint,propshaft	618001
	1972.02-1975.08	MT	Rear	Coupe RWD TL20NE	Wheel Side,Transmission End,Rear Axle Left and Right	Joint,propshaft	618001
	1972.02-1975.08	MT	Rear	Estate RWD TL20NE	Wheel Side,Transmission End,Rear Axle Left and Right	Joint,propshaft	618001
2.3 (79 kw)	1972.02-1975.12	MT	Rear	Saloon RWD TV23	Wheel Side,Transmission End,Rear Axle Left and Right	Joint,propshaft	618001
	1972.02-1975.12	MT	Rear	Coupe RWD TV23	Wheel Side,Transmission End,Rear Axle Left and Right	Joint,propshaft	618001
	1972.02-1975.12	MT	Rear	Estate RWD TV23	Wheel Side,Transmission End,Rear Axle Left and Right	Joint,propshaft	618001
Fiesta							
1.3 (37 kw)	1996.01-2002.04		Centre	Hatchback FWD JJA/JJC/JJE/JJJ/JJK/JJM		Center Bearing Support	538652
1.3 (44 kw)	1995.06-2002.04		Centre	Hatchback FWD J4C/J4J/J4L/J4Q/J4R/J4T		Center Bearing Support	538652
1.4 (66 kw)	1996.01-2002.04		Centre	Hatchback FWD FHA/FHE		Center Bearing Support	538652
1.8 (44 kw)	1995.08-2000.08		Centre	Hatchback FWD RTJ/RTK		Center Bearing Support	538652
Focus CC							
1.6 (74 kw)	2006.10-2011.07		Front	Cabriolet FWD HWDA/HWDB/SHDA/SHDB/SHDC		Flexible Coupling	533418

	YEAR	TRANSM.	FITTING POSITION	BODY STYLE & DRIVE TYPE & ENGINE	REMARKS	PRODUCT	GSP Ref.
FORD							
Focus CC							
2.0 (100 kw)	2006.05-2011.07		Front	Cabriolet FWD G6DA/G6DB/G6DD/G6DG		Flexible Coupling	533418
2.0 (107 kw)	2006.10-2011.07		Front	Cabriolet FWD AODA/AODB/AODE/SYDA		Flexible Coupling	533418
Galaxy							
1.6 (85 kw)	2011.02-2015.06		Front	MPV FWD T1WA/T1WB		Flexible Coupling	533418
1.6 (118 kw)	2010.11-2015.06		Front	MPV FWD JTWA/JTWB		Flexible Coupling	533418
1.8 (74 kw)	2006.04-2015.06		Front	MPV FWD FFWA		Flexible Coupling	533418
1.8 (92 kw)	2006.06-2015.06		Front	MPV FWD QYWA		Flexible Coupling	533418
1.9 (66 kw)	1995.02-2006.05		Centre	MPV FWD 1Z/AHU/ANU		Center Bearing Support	538652
1.9 (81 kw)	1997.10-2000.04		Centre	MPV FWD AFN/AVG		Center Bearing Support	538652
1.9 (85 kw)	2000.05-2006.03		Centre	MPV FWD AUY		Center Bearing Support	538652
1.9 (96 kw)	2002.11-2006.03		Centre	MPV FWD ASZ/AVF		Center Bearing Support	538652
1.9 (110 kw)	2005.01-2006.05		Centre	MPV FWD BTB		Center Bearing Support	538652
2.0 (85 kw)	1995.02-2006.03		Centre	MPV FWD NSE/ZVSA		Center Bearing Support	538652
	2007.11-2015.06		Front	MPV FWD KLWA/TYWA		Flexible Coupling	533418
2.0 (96 kw)	2006.04-2015.06		Front	MPV FWD AZWA		Flexible Coupling	533418
2.0 (100 kw)	2006.04-2015.06		Front	MPV FWD AZWC/UKWA		Flexible Coupling	533418
2.0 (103 kw)	2006.04-2015.06		Front	MPV FWD QXWA/QXWB/QXWC/UFWA		Flexible Coupling	533418
2.0 (107 kw)	2006.05-2015.06		Front	MPV FWD AOWA/AOWB/TBWA/TBWB		Flexible Coupling	533418
	2006.05-2015.06		Front	MPV FWD TBWA/TBWB		Flexible Coupling	533418
2.0 (120 kw)	2010.03-2015.06		Front	MPV FWD TXWA		Flexible Coupling	533418
2.0 (149 kw)	2010.03-2015.06		Front	MPV FWD TNWA		Flexible Coupling	533418
2.2 (129 kw)	2008.03-2012.12		Front	MPV FWD Q4WA		Flexible Coupling	533418
2.2 (147 kw)	2010.11-2015.06		Front	MPV FWD KNWA		Flexible Coupling	533418
2.3 (103 kw)	2002.11-2006.03		Centre	MPV FWD E5SB		Center Bearing Support	538652
2.3 (107 kw)	1996.09-2002.10		Centre	MPV FWD E5SA/Y5B		Center Bearing Support	538652
2.3 (118 kw)	2007.09-2015.06		Front	MPV FWD SEWA		Flexible Coupling	533418
2.8 (128 kw)	1995.11-2000.07		Centre	MPV FWD AAA/AMY		Center Bearing Support	538652
	1996.09-2000.04		Centre	MPV 4WD AAA/AMY		Center Bearing Support	538652
2.8 (150 kw)	2000.05-2006.03		Centre	MPV FWD AYL		Center Bearing Support	538652
Granada							
1.6 (55 kw)	1981.07-1985.08	MT	Rear	Saloon RWD TL16	Wheel Side,Transmission End,Rear Axle Left and Right	Joint,propshaft	618001
1.7 (48 kw)	1972.02-1974.11	MT	Rear	Saloon RWD TV17HC	Date to:1974.11;Wheel Side,Transmission End,Rear Axle Left and Right	Joint,propshaft	618001
	1972.02-1974.11	MT	Rear	Estate RWD TV17HC	Date to:1974.11;Wheel Side,Transmission End,Rear Axle Left and Right	Joint,propshaft	618001
	1972.03-1975.02	MT	Rear	Coupe RWD TV17LC	Wheel Side,Transmission End,Rear Axle Left and Right	Joint,propshaft	618001
1.7 (51 kw)	1974.12-1977.08	MT	Rear	Saloon RWD TV17LC	Wheel Side,Transmission End,Rear Axle Left and Right	Joint,propshaft	618001
	1974.12-1977.08	MT	Rear	Estate RWD TV17HC	Wheel Side,Transmission End,Rear Axle Left and Right	Joint,propshaft	618001
	1977.09-1981.09	MT	Rear	Saloon RWD TV17LC	Date to:1981.09;Wheel Side,Transmission End,Rear Axle Left and Right	Joint,propshaft	618001
1.7 (54 kw)	1977.08-1981.07	MT	Rear	Saloon RWD TV17MY	Wheel Side,Transmission End,Rear Axle Left and Right	Joint,propshaft	618001
	1977.09-1981.08	MT	Rear	Estate RWD TV17HC	Wheel Side,Transmission End,Rear Axle Left and Right	Joint,propshaft	618001
1.7 (55 kw)	1972.02-1974.12	MT	Rear	Saloon RWD TV17H	Wheel Side,Transmission End,Rear Axle Left and Right	Joint,propshaft	618001
1.8 (66 kw)	1985.04-1992.02	MT	Rear	Hatchback RWD REC	Wheel Side,Transmission End,Rear Axle Left and Right	Joint,propshaft	618001
2.0 (64 kw)	1977.08-1979.07	MT	Rear	Estate RWD TL20LC	Wheel Side,Transmission End,Rear Axle Left and Right	Joint,propshaft	618001
2.0 (66 kw)	1974.12-1977.08	MT	Rear	Saloon RWD NY	Wheel Side,Transmission End,Rear Axle Left and Right	Joint,propshaft	618001
	1974.12-1977.08	MT	Rear	Estate RWD NY	Wheel Side,Transmission End,Rear Axle Left and Right	Joint,propshaft	618001
	1977.09-1985.04	MT	Rear	Saloon RWD TV20HC	Date to:1985.04;Wheel Side,Transmission End,Rear Axle Left and Right	Joint,propshaft	618001
	1977.09-1985.04	MT	Rear	Estate RWD TV20HC	Wheel Side,Transmission End,Rear Axle Left and Right	Joint,propshaft	618001
2.0 (70 kw)	1976.01-1977.07	MT	Rear	Saloon RWD TL20LC	Wheel Side,Transmission End,Rear Axle Left and Right	Joint,propshaft	618001
	1976.01-1977.08	MT	Rear	Estate RWD TL20LC	Wheel Side,Transmission End,Rear Axle Left and Right	Joint,propshaft	618001
2.0 (73 kw)	1972.03-1975.02	MT	Rear	Coupe RWD TL20HC	Wheel Side,Transmission End,Rear Axle Left and Right	Joint,propshaft	618001
	1975.01-1975.12	MT	Rear	Saloon RWD TL20LC	Wheel Side,Transmission End,Rear Axle Left and Right	Joint,propshaft	618001
	1975.01-1975.12	MT	Rear	Estate RWD TL20LC	Wheel Side,Transmission End,Rear Axle Left and Right	Joint,propshaft	618001
2.0 (74 kw)	1979.08-1985.08	MT	Rear	Saloon RWD NEP	Wheel Side,Transmission End,Rear Axle Left and Right	Joint,propshaft	618001
2.0 (77 kw)	1985.05-1989.12	AT/MT	Rear	Hatchback RWD N8D/NEL	Wheel Side,Transmission End,Rear Axle Left and Right	Joint,propshaft	618001
2.0 (85 kw)	1985.04-1994.09	AT/MT	Rear	Hatchback RWD NRA/NRI	Wheel Side,Transmission End,Rear Axle Left and Right	Joint,propshaft	618001
	1991.09-1994.09	AT/MT	Rear	Estate RWD N9F	Wheel Side,Transmission End,Rear Axle Left and Right	Joint,propshaft	618001
2.0 (88 kw)	1989.05-1992.10	AT/MT	Rear	Hatchback RWD N9D	Type:Scorpio;Wheel Side,Transmission End,Rear Axle Left and Right	Joint,propshaft	618001
	1989.05-1992.10	AT/MT	Rear	Saloon RWD N9D	Wheel Side,Transmission End,Rear Axle Left and Right	Joint,propshaft	618001
	1992.09-1994.09	AT/MT	Rear	Estate RWD N9D	Wheel Side,Transmission End,Rear Axle Left and Right	Joint,propshaft	618001
2.0 (92 kw)	1989.05-1992.02	MT	Rear	Saloon RWD DL20EGGE	Wheel Side,Transmission End,Rear Axle Left and Right	Joint,propshaft	618001
2.1 (46 kw)	1977.08-1982.08	MT	Rear	Saloon RWD WTA	Wheel Side,Transmission End,Rear Axle Left and Right	Joint,propshaft	618001
2.3 (79 kw)	1972.02-1974.12	MT	Rear	Coupe RWD TV23	Date to:1974.12;Wheel Side,Transmission End,Rear Axle Left and Right	Joint,propshaft	618001
	1975.01-1977.08	MT	Rear	Saloon RWD YYH	Wheel Side,Transmission End,Rear Axle Left and Right	Joint,propshaft	618001
	1977.09-1979.07	MT	Rear	Saloon RWD TV23E	Wheel Side,Transmission End,Rear Axle Left and Right	Joint,propshaft	618001
	1977.09-1979.07	MT	Rear	Estate RWD TV23E	Wheel Side,Transmission End,Rear Axle Left and Right	Joint,propshaft	618001

	YEAR	TRANSM.	FITTING POSITION	BODY STYLE & DRIVE TYPE & ENGINE	REMARKS	PRODUCT	GSP Ref.
FORD							
Granada							
2.3 (82 kw)	1980.01-1985.04	MT	Rear	Saloon RWD YYU	Wheel Side,Transmission End,Rear Axle Left and Right	Joint,propshaft	618001
	1980.01-1985.04	MT	Rear	Estate RWD YYU	Wheel Side,Transmission End,Rear Axle Left and Right	Joint,propshaft	618001
2.3 (84 kw)	1979.08-1985.04	MT	Rear	Saloon RWD YYP	Wheel Side,Transmission End,Rear Axle Left and Right	Joint,propshaft	618001
	1979.08-1985.04	MT	Rear	Estate RWD YYP	Wheel Side,Transmission End,Rear Axle Left and Right	Joint,propshaft	618001
2.4 (92 kw)	1988.11-1992.10	MT	Rear	Saloon RWD ARD	Wheel Side,Transmission End,Rear Axle Left and Right	Joint,propshaft	618001
2.4 (96 kw)	1987.01-1989.08	AT/MT	Rear	Hatchback RWD ARC	Wheel Side,Transmission End,Rear Axle Left and Right	Joint,propshaft	618001
2.5 (51 kw)	1982.08-1985.04	MT	Rear	Saloon RWD STP	Wheel Side,Transmission End,Rear Axle Left and Right	Joint,propshaft	618001
	1982.08-1985.04	MT	Rear	Estate RWD STP	Wheel Side,Transmission End,Rear Axle Left and Right	Joint,propshaft	618001
2.5 (68 kw)	1990.01-1993.08	MT	Rear	Saloon RWD SFA/SFB	Wheel Side,Transmission End,Rear Axle Left and Right	Joint,propshaft	618001
2.5 (85 kw)	1993.08-1994.09	MT	Rear	Hatchback RWD SCB	Wheel Side,Transmission End,Rear Axle Left and Right	Joint,propshaft	618001
	1993.08-1994.09	MT	Rear	Saloon RWD SCB	Wheel Side,Transmission End,Rear Axle Left and Right	Joint,propshaft	618001
	1993.08-1995.03	MT	Rear	Estate RWD SCB	Wheel Side,Transmission End,Rear Axle Left and Right	Joint,propshaft	618001
2.6 (79 kw)	1976.01-1977.08	MT	Rear	Estate RWD TV26LPP	Wheel Side,Transmission End,Rear Axle Left and Right	Joint,propshaft	618001
2.8 (97 kw)	1977.09-1985.08	MT	Rear	Saloon RWD PYU	Wheel Side,Transmission End,Rear Axle Left and Right	Joint,propshaft	618001
	1980.01-1985.08	MT	Rear	Estate RWD PYU	Wheel Side,Transmission End,Rear Axle Left and Right	Joint,propshaft	618001
2.8 (99 kw)	1977.08-1985.08	MT	Rear	Saloon RWD PYA	Wheel Side,Transmission End,Rear Axle Left and Right	Joint,propshaft	618001
2.8 (108 kw)	1977.09-1981.09	MT	Rear	Saloon RWD TV28IRD	Wheel Side,Transmission End,Rear Axle Left and Right	Joint,propshaft	618001
	1977.09-1981.09	MT	Rear	Estate RWD TV28IRD	Wheel Side,Transmission End,Rear Axle Left and Right	Joint,propshaft	618001
2.8 (110 kw)	1981.10-1985.04	MT	Rear	Saloon RWD TV28IRC	Wheel Side,Transmission End,Rear Axle Left and Right	Joint,propshaft	618001
	1981.10-1985.04	MT	Rear	Estate RWD TV28IRC	Wheel Side,Transmission End,Rear Axle Left and Right	Joint,propshaft	618001
	1985.04-1987.08	AT/MT	Rear	Hatchback RWD PRE	Wheel Side,Transmission End,Rear Axle Left and Right	Joint,propshaft	618001
	1985.10-1986.11	AT/MT	Rear	Hatchback 4WD PRE	Wheel Side,Transmission End,Rear Axle Left and Right	Joint,propshaft	618001
2.8 (118 kw)	1977.08-1985.02	MT	Rear	Estate RWD PRB	Wheel Side,Transmission End,Rear Axle Left and Right	Joint,propshaft	618001
	1977.09-1981.09	MT	Rear	Saloon RWD TV28IRB	Wheel Side,Transmission End,Rear Axle Left and Right	Joint,propshaft	618001
2.9 (107 kw)	1987.01-1991.12	AT/MT	Rear	Hatchback 4WD BRD/BRE/BRF	Date from:1988.11;Type:Scorpio;Wheel Side,Transmission End,Rear Axle Left and Right	Joint,propshaft	618001
	1990.01-1991.12	AT/MT	Rear	Saloon 4WD BRD/BRE/BRF	Wheel Side,Transmission End,Rear Axle Left and Right	Joint,propshaft	618001
	1990.01-1994.12	AT/MT	Rear	Saloon RWD BRD/BRE/BRF	Wheel Side,Transmission End,Rear Axle Left and Right	Joint,propshaft	618001
2.9 (110 kw)	1986.09-1994.09	AT/MT	Rear	Hatchback 4WD BRC	Wheel Side,Transmission End,Rear Axle Left and Right	Joint,propshaft	618001
	1986.09-1994.09	AT/MT	Rear	Hatchback RWD BRC	Wheel Side,Transmission End,Rear Axle Left and Right	Joint,propshaft	618001
2.9 (143 kw)	1991.04-1995.03	AT/MT	Rear	Hatchback RWD BOA	Wheel Side,Transmission End,Rear Axle Left and Right	Joint,propshaft	618001
	1991.08-1994.09	AT/MT	Rear	Saloon RWD BOA	Wheel Side,Transmission End,Rear Axle Left and Right	Joint,propshaft	618001
	1992.11-1994.09	AT/MT	Rear	Estate RWD BOA	Wheel Side,Transmission End,Rear Axle Left and Right	Joint,propshaft	618001
Grand Tourneo Connect							
2.0 (90 kw)	2022.02-		Front	MPV 4WD ENK6(DTRC)		Flexible Coupling	537626
	2022.02-		Rear	MPV 4WD ENK6(DTRC)		Flexible Coupling	533882
	2022.02-		Front	MPV 4WD ENK6(DTRC)		Flexible Coupling Kit	537626S
	2022.02-		Rear	MPV 4WD ENK6(DTRC)		Flexible Coupling Kit	533882S
Kuga							
1.5 (132 kw)	2015.10-2019.12	6AT	Rear	SUV 4WD M9MA	Model year from:2017	Propshaft	PS900225
	2015.10-2019.12		Centre	SUV 4WD M9MA		Center Bearing Support	539913
1.5 (134 kw)	2014.09-2018.06		Centre	SUV 4WD M9MA/M9MB/M9MC/M9MD		Center Bearing Support	539913
1.6 (110 kw)	2013.03-2014.09		Centre	SUV 4WD JQMA/JQMB		Center Bearing Support	539913
1.6 (134 kw)	2012.11-2014.09		Centre	SUV 4WD JTMA		Center Bearing Support	539913
2.0 (100 kw)	2008.02-2012.11	MT	Rear	SUV 4WD G6DG/UKDA	for OE No.:9V4N7L190AA	Propshaft	PS901402
	2008.02-2012.11	MT	Rear	SUV 4WD G6DG/UKDA	for OE No.:7N5N-7L190-AA	Propshaft	PS901427
	2013.03-2019.12	AT	Rear	SUV 4WD UKMA	Model year to:2016	Propshaft	PS901401
	2013.03-2019.12		Centre	SUV 4WD UKMA		Center Bearing Support	539913
2.0 (103 kw)	2010.03-2012.11	AT/MT	Rear	SUV 4WD UFDA		Propshaft	PS901402
	2012.11-2014.09		Centre	SUV 4WD UFMA		Center Bearing Support	539913
2.0 (110 kw)	2014.09-2019.06	AT	Rear	SUV 4WD T7MA/T7MB	Model year to:2016	Propshaft	PS901401
	2014.09-2019.06		Centre	SUV 4WD T7MA/T7MB		Center Bearing Support	539913
2.0 (120 kw)	2010.03-2012.11	AT/MT	Rear	SUV 4WD TXDA		Propshaft	PS901402
	2012.11-2014.09		Centre	SUV 4WD TXDA/TXMA		Center Bearing Support	539913
2.0 (132 kw)	2014.09-2019.06	AT	Rear	SUV 4WD T8MA/T8MB	Model year to:2016	Propshaft	PS901401
	2014.09-2019.06		Centre	SUV 4WD T8MA/T8MB		Center Bearing Support	539913
2.5 (125 kw)	2014.09-	6AT	Rear	SUV 4WD C25HDEX	Model year to:2019	Propshaft	PS900225
Mondeo							
2.0 (176 kw)	2013.01-2015.12	AT	Rear	Saloon 4WD R9CB/R9CF/R9CH		Propshaft	PS901518
2.0 (183 kw)	2016.01-2021.12	AT	Rear	Saloon 4WD C20HDTX	Model year to:2020	Propshaft	PS901518
2.5 (125 kw)	2000.10-2007.02		Centre	Hatchback FWD LCBD		Center Bearing Support	538652
	2000.11-2007.08		Centre	Saloon FWD LCBD		Center Bearing Support	538652
2.5 (130 kw)	2012.09-	AT	Rear	Saloon 4WD C25HDEX	Model year from:2013,Model year to:2020	Propshaft	PS901518
3.0 (150 kw)	2004.09-2007.08		Centre	Hatchback FWD REBA		Center Bearing Support	538652
	2004.09-2007.08		Centre	Saloon FWD REBA		Center Bearing Support	538652

	YEAR	TRANSM.	FITTING POSITION	BODY STYLE & DRIVE TYPE & ENGINE	REMARKS	PRODUCT	GSP Ref.
FORD							
Mondeo							
3.0 (166 kw)	2002.02-2007.02		Centre	Hatchback FWD MEBA		Center Bearing Support	538652
	2002.02-2007.02		Centre	Saloon FWD MEBA		Center Bearing Support	538652
Mondeo Estate/Wagon							
2.5 (125 kw)	2000.10-2007.02		Centre	Estate FWD LCBD		Center Bearing Support	538652
3.0 (150 kw)	2004.09-2007.08		Centre	Estate FWD REBA		Center Bearing Support	538652
3.0 (166 kw)	2002.02-2007.02		Centre	Estate FWD MEBA		Center Bearing Support	538652
Mondeo/Fusion							
2.0 (179 kw)	2012.09-2016.07	AT	Rear	Saloon 4WD C20HDTX	Model year from:2013	Propshaft	PS901518
Ranger							
3.0 (109 kw)	1999.06-2006.06		Front	Pickup 4WD T30VVEX		Propshaft	PS900577
	1999.06-2006.06		Front	Pickup 4WD T30VVEX		Joint,propshaft	661100
S-Max							
1.6 (85 kw)	2011.02-2014.12		Front	MPV FWD T1WA/T1WB		Flexible Coupling	533418
1.6 (118 kw)	2011.02-2014.12		Front	MPV FWD JTWA/JTWB		Flexible Coupling	533418
1.8 (74 kw)	2007.01-2010.12		Front	MPV FWD FFWA		Flexible Coupling	533418
1.8 (92 kw)	2006.06-2014.12		Front	MPV FWD QYWA		Flexible Coupling	533418
2.0 (85 kw)	2007.01-2014.12		Front	MPV FWD KLWA/TYWA		Flexible Coupling	533418
2.0 (96 kw)	2006.03-2014.12		Front	MPV FWD AZWA		Flexible Coupling	533418
2.0 (100 kw)	2008.03-2014.12		Front	MPV FWD AZWC/UKWA		Flexible Coupling	533418
2.0 (103 kw)	2006.05-2014.12		Front	MPV FWD QXWA/QXWB/QXWC/UFWA		Flexible Coupling	533418
2.0 (107 kw)	2006.03-2014.12		Front	MPV FWD AODA/AODB/AODE/AOWA/AOWB		Flexible Coupling	533418
	2006.05-2014.12		Front	MPV FWD TBWA/TBWB		Flexible Coupling	533418
2.0 (120 kw)	2010.03-2014.12		Front	MPV FWD TXWA		Flexible Coupling	533418
2.0 (149 kw)	2010.03-2014.12		Front	MPV FWD TNWA		Flexible Coupling	533418
2.0 (176 kw)	2010.07-2014.12		Front	MPV FWD TPWA		Flexible Coupling	533418
2.2 (129 kw)	2008.03-2012.12		Front	MPV FWD Q4WA		Flexible Coupling	533418
2.2 (147 kw)	2010.11-2014.12		Front	MPV FWD KNWA		Flexible Coupling	533418
2.3 (118 kw)	2007.09-2014.12		Front	MPV FWD SEWA		Flexible Coupling	533418
2.5 (162 kw)	2006.03-2014.12		Front	MPV FWD HUWA		Flexible Coupling	533418
Scorpio							
1.8 (66 kw)	1985.04-1992.02	MT	Rear	Hatchback RWD REC	Wheel Side,Transmission End,Rear Axle Left and Right	Joint,propshaft	618001
2.0 (74 kw)	1984.10-1990.02	AT/MT	Rear	Hatchback RWD NE4/NER/NRC	Wheel Side,Transmission End,Rear Axle Left and Right	Joint,propshaft	618001
2.0 (77 kw)	1984.10-1990.02	AT/MT	Rear	Hatchback RWD N8D/NEL	Wheel Side,Transmission End,Rear Axle Left and Right	Joint,propshaft	618001
2.0 (85 kw)	1985.04-1992.02	AT/MT	Rear	Hatchback RWD NRA/NRI	Wheel Side,Transmission End,Rear Axle Left and Right	Joint,propshaft	618001
	1991.09-1994.09	AT/MT	Rear	Estate RWD N9F	Wheel Side,Transmission End,Rear Axle Left and Right	Joint,propshaft	618001
	1992.02-1994.09	AT/MT	Rear	Hatchback RWD N9F	Wheel Side,Transmission End,Rear Axle Left and Right	Joint,propshaft	618001
	1992.02-1994.09	AT/MT	Rear	Saloon RWD N9F	Type:Granada;Wheel Side,Transmission End,Rear Axle Left and Right	Joint,propshaft	618001
	1994.10-1997.12	AT/MT	Rear	Estate RWD NSD	Wheel Side,Transmission End,Rear Axle Left and Right	Joint,propshaft	618001
	1994.10-1998.08	AT/MT	Rear	Saloon RWD NSD	Wheel Side,Transmission End,Rear Axle Left and Right	Joint,propshaft	618001
2.0 (88 kw)	1989.05-1994.09	AT/MT	Rear	Hatchback RWD N9D	Wheel Side,Transmission End,Rear Axle Left and Right	Joint,propshaft	618001
	1990.03-1994.09	AT/MT	Rear	Saloon RWD N9D	Wheel Side,Transmission End,Rear Axle Left and Right	Joint,propshaft	618001
	1990.10-1994.09	AT/MT	Rear	Estate RWD N9D	Wheel Side,Transmission End,Rear Axle Left and Right	Joint,propshaft	618001
2.4 (92 kw)	1988.11-1994.09	MT	Rear	Saloon RWD ARD	Wheel Side,Transmission End,Rear Axle Left and Right	Joint,propshaft	618001
	1991.09-1994.09	MT	Rear	Estate RWD ARD	Wheel Side,Transmission End,Rear Axle Left and Right	Joint,propshaft	618001
2.4 (96 kw)	1986.09-1988.09	AT/MT	Rear	Hatchback RWD ARC	Wheel Side,Transmission End,Rear Axle Left and Right	Joint,propshaft	618001
2.5 (51 kw)	1984.10-1992.08	MT	Rear	Hatchback RWD STR	Wheel Side,Transmission End,Rear Axle Left and Right	Joint,propshaft	618001
2.5 (68 kw)	1988.06-1993.07	MT	Rear	Hatchback RWD SFA/SFB	Wheel Side,Transmission End,Rear Axle Left and Right	Joint,propshaft	618001
	1988.06-1993.07	MT	Rear	Saloon RWD SFA/SFB	Wheel Side,Transmission End,Rear Axle Left and Right	Joint,propshaft	618001
	1991.09-1993.07	MT	Rear	Estate RWD SFA/SFB	Wheel Side,Transmission End,Rear Axle Left and Right	Joint,propshaft	618001
2.5 (85 kw)	1993.08-1994.09	MT	Rear	Estate RWD SCB	Wheel Side,Transmission End,Rear Axle Left and Right	Joint,propshaft	618001
	1993.08-1994.09	MT	Rear	Hatchback RWD SCB	Wheel Side,Transmission End,Rear Axle Left and Right	Joint,propshaft	618001
	1993.08-1994.09	MT	Rear	Saloon RWD SCB	Wheel Side,Transmission End,Rear Axle Left and Right	Joint,propshaft	618001
2.8 (110 kw)	1985.04-1986.11	AT/MT	Rear	Hatchback RWD PRE	Wheel Side,Transmission End,Rear Axle Left and Right	Joint,propshaft	618001
	1985.10-1986.11	AT/MT	Rear	Hatchback 4WD PRE	Wheel Side,Transmission End,Rear Axle Left and Right	Joint,propshaft	618001
2.9 (107 kw)	1986.10-1994.09	AT/MT	Rear	Saloon RWD BRD/BRE/BRF	Wheel Side,Transmission End,Rear Axle Left and Right	Joint,propshaft	618001
	1988.11-1994.09	AT/MT	Rear	Estate 4WD BRD/BRE/BRF	Wheel Side,Transmission End,Rear Axle Left and Right	Joint,propshaft	618001
	1988.11-1994.09	AT/MT	Rear	Hatchback 4WD BRD/BRE/BRF	Date from:1988.11;Wheel Side,Transmission End,Rear Axle Left and Right	Joint,propshaft	618001
	1988.11-1994.09	AT/MT	Rear	Saloon 4WD BRD/BRE/BRF	Wheel Side,Transmission End,Rear Axle Left and Right	Joint,propshaft	618001
	1991.09-1994.09	AT/MT	Rear	Estate RWD BRD/BRE/BRF	Wheel Side,Transmission End,Rear Axle Left and Right	Joint,propshaft	618001
2.9 (110 kw)	1986.09-1994.09	AT/MT	Rear	Hatchback 4WD BRC	Wheel Side,Transmission End,Rear Axle Left and Right	Joint,propshaft	618001
	1986.10-1992.08	AT/MT	Rear	Hatchback RWD BRC	Wheel Side,Transmission End,Rear Axle Left and Right	Joint,propshaft	618001
2.9 (143 kw)	1990.02-1994.09	AT/MT	Rear	Estate RWD BOA	Wheel Side,Transmission End,Rear Axle Left and Right	Joint,propshaft	618001
	1990.02-1994.09	AT/MT	Rear	Hatchback RWD BOA	Wheel Side,Transmission End,Rear Axle Left and Right	Joint,propshaft	618001
	1990.02-1994.09	AT/MT	Rear	Saloon RWD BOA	Wheel Side,Transmission End,Rear Axle Left and Right	Joint,propshaft	618001

	YEAR	TRANSM.	FITTING POSITION	BODY STYLE & DRIVE TYPE & ENGINE	REMARKS	PRODUCT	GSP Ref.
FORD							
Scorpio/Granada							
2.4 (92 kw)	1988.10-1992.02	AT/MT	Rear	Hatchback RWD ARD	Wheel Side,Transmission End,Rear Axle Left and Right	Joint,propshaft	618001
	1988.10-1994.09	AT/MT	Rear	Hatchback RWD ARD	Wheel Side,Transmission End,Rear Axle Left and Right	Joint,propshaft	618001
2.9 (107 kw)	1986.09-1994.09	AT/MT	Rear	Hatchback RWD BRD, BRE, BRF	Wheel Side,Transmission End,Rear Axle Left and Right	Joint,propshaft	618001
Tourneo Custom							
2.2 (74 kw)	2012.09-2015.12		Centre	Bus FWD DRF4/DRFF/DRFG		Center Bearing Support	538648
2.2 (92 kw)	2012.09-2015.12		Centre	Bus FWD CYF4/CYFF		Center Bearing Support	538648
2.2 (114 kw)	2012.09-2015.12		Centre	Bus FWD CVFF		Center Bearing Support	538648
Transit							
2.0 (84 kw)	1994.06-2000.03		Centre	Bus RWD NSH	Inner diameter:35mm	Center Bearing Support	538648
	1994.06-2000.03		Centre	Bus RWD NSH	Inner diameter:45mm	Center Bearing Support	539038
Transit 100							
2.0 (72 kw)	1991.09-1994.07	MT	Rear	Bus RWD NCA		Propshaft	PS900234
2.0 (84 kw)	1994.08-2000.03		Centre	Bus RWD NSF, NSG, NSH		Center Bearing Support	538648
	1994.08-2000.03		Centre	Platform/Chassis RWD NSF, NSG	Inner diameter:35mm	Center Bearing Support	538648
	1994.08-2000.03		Centre	Platform/Chassis RWD NSF, NSG	Inner diameter:45mm	Center Bearing Support	539038
2.5 (51 kw)	1994.08-2000.03		Centre	Platform/Chassis RWD 4FA, 4FB, 4FC, 4FD	Inner diameter:35mm	Center Bearing Support	538648
	1994.08-2000.03		Centre	Bus RWD 4FA, 4FB, 4FC, 4FD	Inner diameter:35mm	Center Bearing Support	538648
	1994.08-2000.03		Centre	Platform/Chassis RWD 4FA, 4FB, 4FC, 4FD	Inner diameter:45mm	Center Bearing Support	539038
	1994.08-2000.03		Centre	Bus RWD 4FA, 4FB, 4FC, 4FD	Inner diameter:45mm	Center Bearing Support	539038
2.5 (55 kw)	1994.08-2000.03		Centre	Platform/Chassis RWD 4HA, 4HD		Center Bearing Support	538648
	1994.08-2000.06		Centre	Bus RWD 4HA, 4HD	Inner diameter:35mm	Center Bearing Support	538648
	1994.08-2000.06		Centre	Bus RWD 4HA, 4HD	Inner diameter:45mm	Center Bearing Support	539038
2.5 (56 kw)	1994.07-2000.03		Centre	Bus RWD 4HB, 4HC		Center Bearing Support	538648
	1994.07-2000.03		Centre	Bus RWD 4HB, 4HC		Center Bearing Support	539038
	1994.08-2000.03		Centre	Platform/Chassis RWD 4HB, 4HC	Inner diameter:35mm	Center Bearing Support	538648
	1994.08-2000.03		Centre	Platform/Chassis RWD 4HB, 4HC	Inner diameter:45mm	Center Bearing Support	539038
2.5 (59 kw)	1991.09-1994.07	MT	Rear	Bus RWD 4DA		Propshaft	PS900234
2.5 (63 kw)	1992.10-1994.07	MT	Rear	Bus RWD 4GA		Propshaft	PS900234
	1994.08-2000.03		Centre	Platform/Chassis RWD 4GA, 4GB, 4GC, 4GD, 4GE, 4GF	Inner diameter:35mm	Center Bearing Support	538648
	1994.08-2000.03		Centre	Platform/Chassis RWD 4GA, 4GB, 4GC, 4GD, 4GE, 4GF	Inner diameter:45mm	Center Bearing Support	539038
	1995.01-2000.03		Centre	Bus RWD 4GA, 4GB, 4GC, 4GD, 4GE, 4GF	Inner diameter:35mm	Center Bearing Support	538648
	1995.01-2000.03		Centre	Bus RWD 4GA, 4GB, 4GC, 4GD, 4GE, 4GF	Inner diameter:45mm	Center Bearing Support	539038
2.5 (74 kw)	1994.06-2000.03		Centre	Van RWD 4EB, 4EC	Inner diameter:35mm	Center Bearing Support	538648
	1994.06-2000.03		Centre	Van RWD 4EB, 4EC	Inner diameter:45mm	Center Bearing Support	539038
	1994.08-2000.03		Centre	Platform/Chassis RWD 4EB, 4EC	Inner diameter:35mm	Center Bearing Support	538648
	1994.08-2000.03		Centre	Platform/Chassis RWD 4EB, 4EC	Inner diameter:45mm	Center Bearing Support	539038
2.5 (85 kw)	1997.08-2000.03		Centre	Bus RWD 4ED	Inner diameter:35mm	Center Bearing Support	538648
	1997.08-2000.03		Centre	Bus RWD 4ED	Inner diameter:45mm	Center Bearing Support	539038
	1999.05-2000.03		Centre	Van RWD 4ED	Inner diameter:35mm	Center Bearing Support	538648
	1999.05-2000.03		Centre	Platform/Chassis RWD 4ED	Inner diameter:35mm	Center Bearing Support	538648
	1999.05-2000.03		Centre	Van RWD 4ED	Inner diameter:45mm	Center Bearing Support	539038
	1999.05-2000.03		Centre	Platform/Chassis RWD 4ED	Inner diameter:45mm	Center Bearing Support	539038
Transit 120							
2.5 (74 kw)	1991.09-1994.07	MT	Rear	Bus RWD 4EA		Propshaft	PS900234
Transit 150							
2.5 (74 kw)	1994.07-2000.03		Centre	Bus RWD 4EB, 4EC	Inner diameter:35mm	Center Bearing Support	538648
	1994.07-2000.03		Centre	Bus RWD 4EB, 4EC	Inner diameter:45mm	Center Bearing Support	539038
Transit 260							
2.0 (55 kw)	2000.06-2003.08		Centre	Bus FWD D3FA		Center Bearing Support	538648
	2000.06-2006.03		Centre	Van FWD D3FA		Center Bearing Support	538648
	2000.08-2006.05		Centre	Chassis Cabin FWD D3FA		Center Bearing Support	538648
2.0 (63 kw)	2000.06-2006.03		Centre	Bus FWD F3FA		Center Bearing Support	538648
	2000.06-2006.03		Centre	Chassis Cabin FWD F3FA		Center Bearing Support	538648
	2000.06-2006.03		Centre	Van FWD F3FA		Center Bearing Support	538648
2.0 (74 kw)	2000.06-2006.03		Centre	Bus FWD ABFA		Center Bearing Support	538648
	2000.06-2006.03		Centre	Chassis Cabin FWD ABFA		Center Bearing Support	538648
	2000.06-2006.03		Centre	Van FWD ABFA		Center Bearing Support	538648
2.0 (92 kw)	2002.03-2006.03		Centre	Van FWD FIFA		Center Bearing Support	538648
2.2 (63 kw)	2006.04-2014.08		Centre	Van FWD P8FA		Center Bearing Support	538648
	2006.04-2014.08		Centre	Van FWD P8FA		Center Bearing Support Kit	538691S
2.2 (81 kw)	2006.04-2014.08		Centre	Van FWD QVFA		Center Bearing Support	538648
2.2 (85 kw)	2008.10-2014.08		Centre	Van FWD SRFA/SRFB/SRFC/SRFD/SRFE		Center Bearing Support	538648
2.2 (96 kw)	2006.04-2014.08		Centre	Van FWD QWFA		Center Bearing Support	538648
	2006.04-2014.08		Centre	Van FWD QWFA		Center Bearing Support Kit	538691S

	YEAR	TRANSM.	FITTING POSITION	BODY STYLE & DRIVE TYPE & ENGINE	REMARKS	PRODUCT	GSP Ref.
FORD							
Transit 260							
2.2 (103 kw)	2007.09-2014.08		Centre	Van FWD PGFA/PGFB/UHFA/UHFB/UHFC		Center Bearing Support	538648
2.4 (88 kw)	2000.08-2003.08	5MT	Rear	Chassis Cabin RWD D4FA		Propshaft	PS900235
	2000.08-2003.08		Centre	Chassis Cabin RWD D4FA		Center Bearing Support	538648
	2000.08-2003.08		Centre	Van RWD D4FA		Center Bearing Support	538648
	2000.08-2003.08		Front	Chassis Cabin RWD D4FA	6MT,Trans. code:MT82	Flexible Coupling	533418
	2000.08-2003.08		Front	Van RWD D4FA	6MT,Trans. code:MT82	Flexible Coupling	533418
	2000.08-2003.08		Front	Chassis Cabin RWD D4FA	Trans. code:MT75,5MT	Flexible Coupling	533420
	2000.08-2003.08		Front	Van RWD D4FA	Trans. code:MT75,5MT	Flexible Coupling	533420
Transit 280							
2.0 (55 kw)	2000.06-2003.08		Centre	Bus FWD D3FA		Center Bearing Support	538648
	2000.06-2003.08		Centre	Chassis Cabin FWD D3FA		Center Bearing Support	538648
	2000.06-2003.08		Centre	Van FWD D3FA		Center Bearing Support	538648
2.0 (63 kw)	2000.06-2006.03		Centre	Bus FWD F3FA		Center Bearing Support	538648
	2000.06-2006.03		Centre	Chassis Cabin FWD F3FA		Center Bearing Support	538648
	2000.06-2006.03		Centre	Van FWD F3FA		Center Bearing Support	538648
2.0 (74 kw)	2000.06-2006.03		Centre	Bus FWD ABFA		Center Bearing Support	538648
	2000.06-2006.03		Centre	Chassis Cabin FWD ABFA		Center Bearing Support	538648
	2000.06-2006.03		Centre	Van FWD ABFA		Center Bearing Support	538648
2.0 (92 kw)	2002.03-2006.03		Centre	Bus FWD FIFA		Center Bearing Support	538648
	2002.03-2006.03		Centre	Chassis Cabin FWD FIFA		Center Bearing Support	538648
	2002.03-2006.03		Centre	Van FWD FIFA		Center Bearing Support	538648
2.2 (63 kw)	2006.04-2014.08		Centre	Bus FWD P8FA/P8FB		Center Bearing Support	538648
	2006.04-2014.08		Centre	Van FWD P8FA		Center Bearing Support	538648
	2006.04-2014.08		Centre	Van FWD P8FA		Center Bearing Support Kit	538691S
2.2 (81 kw)	2006.04-2014.08		Centre	Bus FWD QVFA		Center Bearing Support	538648
	2006.04-2014.08		Centre	Van FWD QVFA		Center Bearing Support	538648
2.2 (85 kw)	2008.10-2014.08		Centre	Bus FWD SRFA/SRFB/SRFC/SRFD/SRFE		Center Bearing Support	538648
	2008.10-2014.08		Centre	Van FWD SRFA/SRFB/SRFC/SRFD/SRFE		Center Bearing Support	538648
2.2 (96 kw)	2006.04-2014.08		Centre	Bus FWD QWFA		Center Bearing Support	538648
	2006.04-2014.08		Centre	Van FWD QWFA		Center Bearing Support	538648
	2006.04-2014.08		Centre	Van FWD QWFA		Center Bearing Support Kit	538691S
2.2 (103 kw)	2007.09-2014.08		Centre	Bus FWD PGFA/PGFB/UHFA/UHFB/UHFC		Center Bearing Support	538648
	2007.09-2014.08		Centre	Van FWD PGFA/PGFB/UHFA/UHFB/UHFC		Center Bearing Support	538648
2.4 (88 kw)	2000.08-2003.08	5MT	Rear	Chassis Cabin RWD D4FA		Propshaft	PS900235
	2000.08-2003.08		Centre	Chassis Cabin RWD D4FA		Center Bearing Support	538648
	2000.08-2003.08		Centre	Van RWD D4FA		Center Bearing Support	538648
	2000.08-2003.08		Front	Chassis Cabin RWD D4FA	6MT,Trans. code:MT82	Flexible Coupling	533418
	2000.08-2003.08		Front	Van RWD D4FA	6MT,Trans. code:MT82	Flexible Coupling	533418
	2000.08-2003.08		Front	Chassis Cabin RWD D4FA	Trans. code:MT75,5MT	Flexible Coupling	533420
	2000.08-2003.08		Front	Van RWD D4FA	Trans. code:MT75,5MT	Flexible Coupling	533420
Transit 290							
2.0 (96 kw)	2016.03-		Front	Van FWD BKFA/BKFB/YMF6/YMFA/YMFB/YMFS		Flexible Coupling	533418
Transit 300							
2.0 (55 kw)	2000.06-2003.08		Centre	Chassis Cabin FWD D3FA		Center Bearing Support	538648
	2000.09-2003.08		Centre	Bus FWD D3FA		Center Bearing Support	538648
2.0 (63 kw)	2000.06-2006.03		Centre	Bus FWD F3FA		Center Bearing Support	538648
	2000.06-2006.03		Centre	Chassis Cabin FWD F3FA		Center Bearing Support	538648
	2000.06-2006.03		Centre	Van FWD F3FA		Center Bearing Support	538648
2.0 (74 kw)	2000.06-2006.03		Centre	Bus FWD ABFA		Center Bearing Support	538648
	2000.06-2006.03		Centre	Chassis Cabin FWD ABFA		Center Bearing Support	538648
	2000.06-2006.03		Centre	Van FWD ABFA		Center Bearing Support	538648
2.0 (92 kw)	2002.09-2006.03		Centre	Bus FWD FIFA		Center Bearing Support	538648
	2002.09-2006.03		Centre	Chassis Cabin FWD FIFA		Center Bearing Support	538648
	2002.09-2006.03		Centre	Van FWD FIFA		Center Bearing Support	538648
2.2 (63 kw)	2006.04-2014.08		Centre	Bus FWD P8FA/P8FB		Center Bearing Support	538648
	2006.04-2014.08		Centre	Chassis Cabin FWD P8FA/P8FB		Center Bearing Support	538648
	2006.04-2014.08		Centre	Van FWD P8FA/P8FB		Center Bearing Support	538648
	2006.04-2014.08		Centre	Van FWD P8FA/P8FB		Center Bearing Support Kit	538691S
2.2 (74 kw)	2011.10-2014.08	6MT	Rear	Chassis Cabin RWD DRRA/DRRB/DRRC	for OE No.:CC114K357DD	Propshaft	PS900616
	2011.10-2014.08	6MT	Rear	Van RWD DRRA/DRRB/DRRC		Propshaft	PS900616
	2011.10-2014.08	6MT	Rear	Chassis Cabin RWD DRRA/DRRB/DRRC	Date from:2013.01;for OE No.:CC114K357CC	Propshaft	PS901673
	2011.10-2014.08		Centre	Van RWD DRRA/DRRB/DRRC		Center Bearing Support	538648
	2011.10-2014.08		Front	Chassis Cabin RWD DRRA/DRRB/DRRC	6MT	Flexible Coupling	533418
	2011.10-2014.08		Front	Van RWD DRRA/DRRB/DRRC	6MT	Flexible Coupling	533418

	YEAR	TRANSM.	FITTING POSITION	BODY STYLE & DRIVE TYPE & ENGINE	REMARKS	PRODUCT	GSP Ref.
FORD **Transit 300**							
2.2 (74 kw)	2011.10-2014.08		Front	Chassis Cabin RWD DRRA/DRRB/DRRC	Trans. code:MT75,5MT	Flexible Coupling	533420
	2011.10-2014.08		Front	Van RWD DRRA/DRRB/DRRC	Trans. code:MT75,5MT	Flexible Coupling	533420
2.2 (81 kw)	2006.04-2014.08		Centre	Bus FWD QVFA		Center Bearing Support	538648
	2006.04-2014.08		Centre	Chassis Cabin FWD QVFA		Center Bearing Support	538648
	2006.04-2014.08		Centre	Van FWD QVFA		Center Bearing Support	538648
2.2 (85 kw)	2008.10-2014.08		Centre	Bus FWD SRFA/SRFB/SRFC/SRFD/SRFE		Center Bearing Support	538648
	2008.10-2014.08		Centre	Chassis Cabin FWD SRFA/SRFB/SRFC/SRFD/SRFE		Center Bearing Support	538648
	2008.10-2014.08		Centre	Van FWD SRFA/SRFB/SRFC/SRFD/SRFE		Center Bearing Support	538648
2.2 (92 kw)	2011.09-2014.12	6MT	Rear	Van RWD CYRA		Propshaft	PS900617
	2011.09-2014.12		Centre	Van RWD CYRA		Center Bearing Support	538648
	2011.09-2014.12		Front	Van RWD CYRA		Flexible Coupling	533418
	2011.09-2014.12		Front	Van RWD CYRA		Flexible Coupling	533420
2.2 (96 kw)	2006.04-2014.08		Centre	Bus FWD QWFA		Center Bearing Support	538648
	2006.04-2014.08		Centre	Chassis Cabin FWD QWFA		Center Bearing Support	538648
	2006.04-2014.08		Centre	Van FWD QWFA		Center Bearing Support	538648
	2006.04-2014.08		Centre	Van FWD QWFA		Center Bearing Support Kit	538691S
2.2 (103 kw)	2007.09-2014.08		Centre	Bus FWD PGFA/PGFB/UHFA/UHFB/UHFC		Center Bearing Support	538648
	2007.09-2014.08		Centre	Chassis Cabin FWD PGFA/PGFB/UHFA/UHFB/UHFC		Center Bearing Support	538648
	2007.09-2014.08		Centre	Van FWD PGFA/PGFB/UHFA/UHFB/UHFC		Center Bearing Support	538648
2.3 (100 kw)	2006.04-2014.08		Centre	Chassis Cabin RWD GZFC		Center Bearing Support	538648
	2006.04-2014.08		Centre	Van RWD GZFC		Center Bearing Support	538648
	2006.04-2014.08		Front	Chassis Cabin RWD GZFC	6MT	Flexible Coupling	533418
	2006.04-2014.08		Front	Van RWD GZFC	6MT	Flexible Coupling	533418
	2006.04-2014.08		Front	Chassis Cabin RWD GZFC	For OE No.4393343	Flexible Coupling	533420
	2006.04-2014.08		Front	Van RWD GZFC	For OE No.4393343	Flexible Coupling	533420
2.3 (105 kw)	2001.03-2006.03		Front	Van RWD E5FC	For OE No.4165078	Flexible Coupling	533418
	2001.03-2006.03		Front	Van RWD E5FC	For OE No.4393343	Flexible Coupling	533420
2.3 (107 kw)	2006.04-2014.08		Centre	Chassis Cabin RWD GZFA/GZFB/GZFC		Center Bearing Support	538648
	2006.04-2014.08		Centre	Chassis Cabin RWD GZFC		Center Bearing Support	538648
	2006.04-2014.08		Centre	Van RWD GZFC		Center Bearing Support	538648
	2006.04-2014.08		Front	Chassis Cabin RWD GZFA/GZFB/GZFC	6MT,Trans. code:MT82	Flexible Coupling	533418
	2006.04-2014.08		Front	Chassis Cabin RWD GZFC	6MT	Flexible Coupling	533418
	2006.04-2014.08		Front	Van RWD GZFC	6MT	Flexible Coupling	533418
	2006.04-2014.08		Front	Chassis Cabin RWD GZFA/GZFB/GZFC	Trans. code:MT75,5MT	Flexible Coupling	533420
	2006.04-2014.08		Front	Chassis Cabin RWD GZFC	For OE No.4393343	Flexible Coupling	533420
	2006.04-2014.08		Front	Van RWD GZFC	For OE No.4393343	Flexible Coupling	533420
	2006.06-2014.08		Centre	Van RWD GZFA/GZFB/GZFC		Center Bearing Support	538648
	2006.06-2014.08		Front	Van RWD GZFA/GZFB/GZFC	6MT,Trans. code:MT82	Flexible Coupling	533418
	2006.06-2014.08		Front	Van RWD GZFA/GZFB/GZFC	Trans. code:MT75,5MT	Flexible Coupling	533420
2.4 (66 kw)	2000.01-2006.05	5MT	Rear	Chassis Cabin RWD D2FA/D2FB		Propshaft	PS900235
	2000.01-2006.05		Centre	Chassis Cabin RWD D2FA/D2FB		Center Bearing Support	538648
	2000.01-2006.05		Front	Chassis Cabin RWD D2FA/D2FB	6MT	Flexible Coupling	533418
	2000.01-2006.05		Front	Chassis Cabin RWD D2FA/D2FB	Trans. code:MT75,5MT	Flexible Coupling	533420
	2001.10-2006.03		Centre	Van RWD D2FA		Center Bearing Support	538648
	2001.10-2006.03		Front	Van RWD D2FA	6MT	Flexible Coupling	533418
	2001.10-2006.03		Front	Van RWD D2FA	Trans. code:MT75,5MT	Flexible Coupling	533420
2.4 (74 kw)	2006.04-2014.08	6MT	Rear	Chassis Cabin RWD PHFA/PHFC		Propshaft	PS901673
	2006.04-2014.08		Centre	Chassis Cabin RWD PHFA/PHFC		Center Bearing Support	538648
	2006.04-2014.08		Centre	Van RWD PHFA/PHFC		Center Bearing Support	538648
	2006.04-2014.08		Centre	Chassis Cabin RWD PHFA/PHFC		Center Bearing Support Kit	538691S
	2006.04-2014.08		Centre	Van RWD PHFA/PHFC		Center Bearing Support Kit	538691S
	2006.04-2014.08		Front	Chassis Cabin RWD PHFA/PHFC	6MT	Flexible Coupling	533418
	2006.04-2014.08		Front	Van RWD PHFA/PHFC	6MT	Flexible Coupling	533418
	2006.04-2014.08		Front	Chassis Cabin RWD PHFA/PHFC	Trans. code:MT75,5MT	Flexible Coupling	533420
	2006.04-2014.08		Front	Van RWD PHFA/PHFC	Trans. code:MT75,5MT	Flexible Coupling	533420
2.4 (85 kw)	2004.01-2006.03	5MT	Rear	Chassis Cabin RWD FXFA		Propshaft	PS900235
	2004.01-2006.03		Centre	Bus RWD FXFA		Center Bearing Support	538648
	2004.01-2006.03		Centre	Chassis Cabin RWD FXFA		Center Bearing Support	538648
	2004.01-2006.03		Centre	Van RWD FXFA		Center Bearing Support	538648
	2004.01-2006.03		Front	Bus RWD FXFA	6MT	Flexible Coupling	533418
	2004.01-2006.03		Front	Chassis Cabin RWD FXFA	6MT	Flexible Coupling	533418
	2004.01-2006.03		Front	Van RWD FXFA	6MT	Flexible Coupling	533418
	2004.01-2006.03		Front	Bus RWD FXFA	Trans. code:MT75,5MT	Flexible Coupling	533420
	2004.01-2006.03		Front	Chassis Cabin RWD FXFA	Trans. code:MT75,5MT	Flexible Coupling	533420

	YEAR	TRANSM.	FITTING POSITION	BODY STYLE & DRIVE TYPE & ENGINE	REMARKS	PRODUCT	GSP Ref.
FORD							
Transit 300							
2.4 (85 kw)	2004.01-2006.03		Front	Van RWD FXFA	Trans. code:MT75,5MT	Flexible Coupling	533420
	2006.04-2014.08	6MT	Rear	Van RWD JXFA/JXFC		Propshaft	PS900616
	2006.04-2014.08		Centre	Van RWD JXFA/JXFC		Center Bearing Support	538648
	2006.04-2014.08		Centre	Van RWD JXFA/JXFC		Center Bearing Support Kit	538691S
	2006.04-2014.08		Front	Van RWD JXFA/JXFC		Flexible Coupling	533418
	2006.04-2014.08		Front	Van RWD JXFA/JXFC		Flexible Coupling	533420
2.4 (92 kw)	2001.10-2006.03		Centre	Van RWD DOFA		Center Bearing Support	538648
	2001.10-2006.03		Front	Van RWD DOFA	6MT	Flexible Coupling	533418
	2001.10-2006.03		Front	Van RWD DOFA	Trans. code:MT75,5MT	Flexible Coupling	533420
Transit 310							
2.0 (77 kw)	2016.03-		Centre	Chassis Cabin RWD YLR6		Center Bearing Support	538648
	2016.03-		Front	Chassis Cabin RWD YLR6		Flexible Coupling	533418
2.0 (96 kw)	2016.03-	6MT	Rear	Chassis Cabin RWD YMR6		Propshaft	PS900615
	2016.03-		Centre	Chassis Cabin 4WD YMR6		Center Bearing Support	538648
	2016.03-		Centre	Chassis Cabin RWD YMR6		Center Bearing Support	538648
	2016.03-		Front	Chassis Cabin 4WD YMR6		Flexible Coupling	533418
	2016.03-		Front	Chassis Cabin RWD YMR6		Flexible Coupling	533418
	2016.03-		Front	Van FWD BKFA/BKFB/YMF6/YMFA/YMFB/YMFS		Flexible Coupling	533418
	2019.05-		Centre	Chassis Cabin RWD BKRB		Center Bearing Support	538648
	2019.05-		Front	Chassis Cabin RWD BKRB		Flexible Coupling	533418
2.0 (125 kw)	2016.03-2024.06		Front	Van FWD BLFA/BLFB/YNF6/YNFA/YNFB/YNFS		Flexible Coupling	533418
	2019.05-		Centre	Chassis Cabin RWD BLHA		Center Bearing Support	538648
	2019.05-		Front	Chassis Cabin RWD BLHA		Flexible Coupling	533418
2.2 (74 kw)	2013.08-2018.12		Centre	Chassis Cabin RWD DRR5		Center Bearing Support	538648
	2013.08-2018.12		Front	Chassis Cabin RWD DRR5		Flexible Coupling	533418
2.2 (92 kw)	2013.08-2018.12	6MT	Rear	Chassis Cabin RWD CYR5/USR6		Propshaft	PS900615
	2013.08-2018.12		Centre	Chassis Cabin RWD CYR5/USR6		Center Bearing Support	538648
	2013.08-2018.12		Front	Chassis Cabin RWD CYR5/USR6	Inner diameter:64.5mm	Flexible Coupling	533418
	2013.08-2018.12		Front	Chassis Cabin RWD CYR5/USR6	Inner diameter:56mm	Flexible Coupling	533420
2.2 (114 kw)	2013.08-2018.12		Centre	Chassis Cabin RWD CV24/CVR5/UYR6		Center Bearing Support	538648
	2013.08-2018.12		Front	Chassis Cabin RWD CV24/CVR5/UYR6	Inner diameter:64.5mm	Flexible Coupling	533418
	2013.08-2018.12		Front	Chassis Cabin RWD CV24/CVR5/UYR6	Inner diameter:56mm	Flexible Coupling	533420
Transit 330							
2.0 (74 kw)	2000.06-2006.05		Centre	Chassis Cabin FWD ABFA		Center Bearing Support	538648
	2000.06-2006.05		Centre	Van FWD ABFA		Center Bearing Support	538648
2.0 (77 kw)	2016.03-		Centre	Chassis Cabin RWD YLR6		Center Bearing Support	538648
	2016.03-		Front	Chassis Cabin RWD YLR6		Flexible Coupling	533418
2.0 (92 kw)	2000.06-2006.05		Centre	Chassis Cabin FWD FIFA		Center Bearing Support	538648
	2000.06-2006.05		Centre	Van FWD FIFA		Center Bearing Support	538648
2.0 (96 kw)	2016.03-	6MT	Rear	Chassis Cabin RWD BKRA/YMR6		Propshaft	PS900615
	2016.03-		Centre	Chassis Cabin 4WD BKRA/YMR6/YMRA		Center Bearing Support	538648
	2016.03-		Centre	Chassis Cabin RWD BKRA/YMR6		Center Bearing Support	538648
	2016.03-		Front	Chassis Cabin 4WD BKRA/YMR6/YMRA		Flexible Coupling	533418
	2016.03-		Front	Van FWD BKFA/BKFB/YMF6/YMFA/YMFB/YMFS		Flexible Coupling	533418
	2016.03-		Front	Chassis Cabin RWD BKRA/YMR6		Flexible Coupling	533418
	2019.05-		Centre	Chassis Cabin RWD BKRB		Center Bearing Support	538648
	2019.05-		Front	Chassis Cabin RWD BKRB		Flexible Coupling	533418
2.0 (125 kw)	2016.03-2024.06		Front	Van FWD BLFA/BLFB/YNF6/YNFA/YNFB/YNFS		Flexible Coupling	533418
	2019.05-		Centre	Chassis Cabin RWD BLHA		Center Bearing Support	538648
	2019.05-		Front	Chassis Cabin RWD BLHA		Flexible Coupling	533418
	2019.05-2024.06		Centre	Chassis Cabin 4WD BLRA		Center Bearing Support	538648
	2019.05-2024.06		Front	Chassis Cabin 4WD BLRA		Flexible Coupling	533418
2.2 (74 kw)	2011.10-2014.08	6MT	Rear	Bus RWD DRRA/DRRB/DRRC		Propshaft	PS900616
	2011.10-2014.08	6MT	Rear	Van RWD DRRA/DRRB/DRRC		Propshaft	PS900616
	2011.10-2014.08	6MT	Rear	Chassis Cabin RWD DRRA/DRRB/DRRC	for OE No.:CC114K357DD	Propshaft	PS900616
	2011.10-2014.08	6MT	Rear	Chassis Cabin RWD DRRA/DRRB/DRRC	Date from:2013.01;for OE No.:CC114K357CC	Propshaft	PS901673
	2011.10-2014.08		Centre	Bus RWD DRRA/DRRB/DRRC		Center Bearing Support	538648
	2011.10-2014.08		Centre	Van RWD DRRA/DRRB/DRRC		Center Bearing Support	538648
	2011.10-2014.08		Front	Bus RWD DRRA/DRRB/DRRC	6MT	Flexible Coupling	533418
	2011.10-2014.08		Front	Van RWD DRRA/DRRB/DRRC	6MT	Flexible Coupling	533418
	2011.10-2014.08		Front	Chassis Cabin RWD DRRA/DRRB/DRRC	6MT	Flexible Coupling	533418
	2011.10-2014.08		Front	Bus RWD DRRA/DRRB/DRRC	Trans. code:MT75,5MT	Flexible Coupling	533420
	2011.10-2014.08		Front	Van RWD DRRA/DRRB/DRRC	Trans. code:MT75,5MT	Flexible Coupling	533420
	2011.10-2014.08		Front	Chassis Cabin RWD DRRA/DRRB/DRRC	Trans. code:MT75,5MT	Flexible Coupling	533420

	YEAR	TRANSM.	FITTING POSITION	BODY STYLE & DRIVE TYPE & ENGINE	REMARKS	PRODUCT	GSP Ref.
FORD **Transit 330**							
2.2 (74 kw)	2013.08-2018.12		Centre	Chassis Cabin RWD DRR5		Center Bearing Support	538648
	2013.08-2018.12		Front	Chassis Cabin RWD DRR5		Flexible Coupling	533418
2.2 (81 kw)	2006.04-2014.08		Centre	Bus FWD QVFA		Center Bearing Support	538648
	2006.04-2014.08		Centre	Van FWD QVFA		Center Bearing Support	538648
2.2 (85 kw)	2008.10-2014.08		Centre	Bus FWD SRFA/SRFB/SRFC/SRFD/SRFE		Center Bearing Support	538648
	2008.10-2014.08		Centre	Van FWD SRFA/SRFB/SRFC/SRFD/SRFE		Center Bearing Support	538648
	2008.10-2014.08		Centre	Chassis Cabin FWD SRFA/SRFB/SRFC/SRFD/SRFE		Center Bearing Support	538648
2.2 (92 kw)	2011.09-2014.12	6MT	Rear	Bus RWD CYRA		Propshaft	PS900617
	2011.09-2014.12	6MT	Rear	Van RWD CYRA		Propshaft	PS900617
	2011.09-2014.12		Centre	Bus RWD CYRA		Center Bearing Support	538648
	2011.09-2014.12		Centre	Van RWD CYRA		Center Bearing Support	538648
	2011.09-2014.12		Front	Bus RWD CYRA		Flexible Coupling	533418
	2011.09-2014.12		Front	Van RWD CYRA		Flexible Coupling	533418
	2011.09-2014.12		Front	Bus RWD CYRA		Flexible Coupling	533420
	2011.09-2014.12		Front	Van RWD CYRA		Flexible Coupling	533420
	2011.10-2014.08	6MT	Rear	Chassis Cabin RWD CYRA	for OE No.:CC114K357FD	Propshaft	PS900617
	2011.10-2014.08	6MT	Rear	Chassis Cabin 4WD CYRB/CYRC	Date from:2013.01	Propshaft	PS901673
	2011.10-2014.08	6MT	Rear	Chassis Cabin RWD CYRA	Date from:2013.01,Model:Transit 330;for OE No.:CC11-4K357-CC	Propshaft	PS901673
	2011.10-2014.08		Front	Van 4WD CYRB/CYRC	6MT	Flexible Coupling	533418
	2011.10-2014.08		Front	Chassis Cabin 4WD CYRB/CYRC	6MT	Flexible Coupling	533418
	2011.10-2014.08		Front	Chassis Cabin RWD CYRA		Flexible Coupling	533418
	2011.10-2014.08		Front	Van 4WD CYRB/CYRC	Trans. code:MT75,5MT	Flexible Coupling	533420
	2011.10-2014.08		Front	Chassis Cabin 4WD CYRB/CYRC	Trans. code:MT75,5MT	Flexible Coupling	533420
	2011.10-2014.08		Front	Chassis Cabin RWD CYRA		Flexible Coupling	533420
	2013.08-2018.12	6MT	Rear	Chassis Cabin RWD CYR5/USR6		Propshaft	PS900615
	2013.08-2018.12		Centre	Chassis Cabin 4WD CY24/CYR5		Center Bearing Support	538648
	2013.08-2018.12		Centre	Chassis Cabin RWD CYR5/USR6		Center Bearing Support	538648
	2013.08-2018.12		Front	Chassis Cabin 4WD CY24/CYR5		Flexible Coupling	533418
	2013.08-2018.12		Front	Chassis Cabin RWD CYR5/USR6	Inner diameter:64.5mm	Flexible Coupling	533418
	2013.08-2018.12		Front	Chassis Cabin RWD CYR5/USR6	Inner diameter:56mm	Flexible Coupling	533420
2.2 (96 kw)	2006.04-2014.08		Centre	Bus FWD QWFA		Center Bearing Support	538648
	2006.04-2014.08		Centre	Van FWD QWFA		Center Bearing Support	538648
	2006.04-2014.08		Centre	Van FWD QWFA		Center Bearing Support Kit	538691S
2.2 (103 kw)	2007.09-2014.08		Centre	Bus FWD PGFA/PGFB/UHFA/UHFB/UHFC		Center Bearing Support	538648
	2007.09-2014.08		Centre	Van FWD PGFA/PGFB/UHFA/UHFB/UHFC		Center Bearing Support	538648
	2007.10-2014.08		Centre	Chassis Cabin FWD PGFA/PGFB/UHFA/UHFB/UHFC		Center Bearing Support	538648
2.2 (114 kw)	2011.10-2014.08	6MT	Rear	Chassis Cabin RWD CVRA/CVRB/CVRC	Model:Transit 460;Date from:2013.01	Propshaft	PS901673
	2011.10-2014.08		Centre	Van RWD CVRA/CVRB/CVRC		Center Bearing Support	538648
	2011.10-2014.08		Front	Chassis Cabin RWD CVRA/CVRB/CVRC	6MT	Flexible Coupling	533418
	2011.10-2014.08		Front	Van RWD CVRA/CVRB/CVRC	6MT	Flexible Coupling	533418
	2011.10-2014.08		Front	Chassis Cabin RWD CVRA/CVRB/CVRC	Trans. code:MT75,5MT	Flexible Coupling	533420
	2011.10-2014.08		Front	Van RWD CVRA/CVRB/CVRC	Trans. code:MT75,5MT	Flexible Coupling	533420
	2013.08-2018.12		Centre	Chassis Cabin RWD CV24/CVR5/UYR6		Center Bearing Support	538648
	2013.08-2018.12		Front	Chassis Cabin RWD CV24/CVR5/UYR6	Inner diameter:64.5mm	Flexible Coupling	533418
	2013.08-2018.12		Front	Chassis Cabin RWD CV24/CVR5/UYR6	Inner diameter:56mm	Flexible Coupling	533420
2.3 (105 kw)	2001.03-2006.03		Front	Van RWD E5FC	For OE No.4165078	Flexible Coupling	533418
	2001.03-2006.03		Front	Van RWD E5FC	For OE No.4393343	Flexible Coupling	533420
2.3 (107 kw)	2000.08-2006.03		Centre	Bus RWD E5FA/E5FC		Center Bearing Support	538648
	2000.08-2006.03		Front	Bus RWD E5FA/E5FC	6MT,Trans. code:MT82	Flexible Coupling	533418
	2000.08-2006.03		Front	Bus RWD E5FA/E5FC	Trans. code:MT75,5MT	Flexible Coupling	533420
	2001.03-2006.05	5MT	Rear	Chassis Cabin RWD E5FA/E5FC		Propshaft	PS900235
	2001.03-2006.05		Centre	Chassis Cabin RWD E5FA/E5FC		Center Bearing Support	538648
	2001.03-2006.05		Centre	Van RWD E5FA/E5FC		Center Bearing Support	538648
	2001.03-2006.05		Front	Chassis Cabin RWD E5FA/E5FC	6MT,Trans. code:MT82	Flexible Coupling	533418
	2001.03-2006.05		Front	Van RWD E5FA/E5FC	6MT,Trans. code:MT82	Flexible Coupling	533418
	2001.03-2006.05		Front	Chassis Cabin RWD E5FA/E5FC	Trans. code:MT75,5MT	Flexible Coupling	533420
	2001.03-2006.05		Front	Van RWD E5FA/E5FC	Trans. code:MT75,5MT	Flexible Coupling	533420
	2006.04-2014.08		Centre	Chassis Cabin RWD GZFB		Center Bearing Support	538648
	2006.04-2014.08		Front	Chassis Cabin RWD GZFB	6MT	Flexible Coupling	533418
	2006.04-2014.08		Front	Chassis Cabin RWD GZFB	Trans. code:MT75,5MT	Flexible Coupling	533420
	2006.07-2014.08		Centre	Van RWD GZFA		Center Bearing Support	538648
	2006.07-2014.08		Front	Van RWD GZFA	6MT	Flexible Coupling	533418
	2006.07-2014.08		Front	Van RWD GZFA	Trans. code:MT75,5MT	Flexible Coupling	533420

	YEAR	TRANSM.	FITTING POSITION	BODY STYLE & DRIVE TYPE & ENGINE	REMARKS	PRODUCT	GSP Ref.
FORD **Transit 330**							
2.4 (55 kw)	2000.01-2003.08	5MT	Rear	Chassis Cabin RWD F4FA		Propshaft	PS900235
	2000.01-2003.08		Centre	Chassis Cabin RWD F4FA		Center Bearing Support	538648
	2000.01-2003.08		Front	Chassis Cabin RWD F4FA	6MT,Trans. code:MT82	Flexible Coupling	533418
	2000.01-2003.08		Front	Chassis Cabin RWD F4FA	Trans. code:MT75,5MT	Flexible Coupling	533420
	2000.08-2003.08		Centre	Bus RWD F4FA		Center Bearing Support	538648
	2000.08-2003.08		Front	Bus RWD F4FA	6MT,Trans. code:MT82	Flexible Coupling	533418
	2000.08-2003.08		Front	Bus RWD F4FA	Trans. code:MT75,5MT	Flexible Coupling	533420
2.4 (66 kw)	2000.01-2006.03		Centre	Van RWD D2FA/D2FB		Center Bearing Support	538648
	2000.01-2006.03		Front	Van RWD D2FA/D2FB	6MT,Trans. code:MT82	Flexible Coupling	533418
	2000.01-2006.03		Front	Van RWD D2FA/D2FB	Trans. code:MT75,5MT	Flexible Coupling	533420
	2000.01-2006.05	5MT	Rear	Chassis Cabin RWD D2FA/D2FB		Propshaft	PS900235
	2000.01-2006.05		Centre	Chassis Cabin RWD D2FA/D2FB		Center Bearing Support	538648
	2000.01-2006.05		Front	Chassis Cabin RWD D2FA/D2FB	6MT,Trans. code:MT82	Flexible Coupling	533418
	2000.01-2006.05		Front	Chassis Cabin RWD D2FA/D2FB	Trans. code:MT75,5MT	Flexible Coupling	533420
	2001.10-2006.03		Centre	Bus RWD D2FA/D2FB		Center Bearing Support	538648
	2001.10-2006.03		Front	Bus RWD D2FA/D2FB	6MT,Trans. code:MT82	Flexible Coupling	533418
	2001.10-2006.03		Front	Bus RWD D2FA/D2FB	Trans. code:MT75,5MT	Flexible Coupling	533420
2.4 (74 kw)	2006.04-2014.08	6MT	Rear	Chassis Cabin RWD PHFA/PHFC		Propshaft	PS901673
	2006.04-2014.08		Centre	Bus RWD PHFA/PHFC		Center Bearing Support	538648
	2006.04-2014.08		Centre	Chassis Cabin RWD PHFA/PHFC		Center Bearing Support	538648
	2006.04-2014.08		Centre	Van RWD PHFA/PHFC		Center Bearing Support	538648
	2006.04-2014.08		Centre	Bus RWD PHFA/PHFC		Center Bearing Support Kit	538691S
	2006.04-2014.08		Centre	Chassis Cabin RWD PHFA/PHFC		Center Bearing Support Kit	538691S
	2006.04-2014.08		Centre	Van RWD PHFA/PHFC		Center Bearing Support Kit	538691S
	2006.04-2014.08		Front	Bus RWD PHFA/PHFC	6MT,Trans. code:MT82	Flexible Coupling	533418
	2006.04-2014.08		Front	Chassis Cabin RWD PHFA/PHFC	6MT	Flexible Coupling	533418
	2006.04-2014.08		Front	Van RWD PHFA/PHFC	6MT	Flexible Coupling	533418
	2006.04-2014.08		Front	Bus RWD PHFA/PHFC	Trans. code:MT75,5MT	Flexible Coupling	533420
	2006.04-2014.08		Front	Chassis Cabin RWD PHFA/PHFC	Trans. code:MT75,5MT	Flexible Coupling	533420
	2006.04-2014.08		Front	Van RWD PHFA/PHFC	Trans. code:MT75,5MT	Flexible Coupling	533420
2.4 (85 kw)	2004.01-2006.03	5MT	Rear	Chassis Cabin RWD FXFA		Propshaft	PS900235
	2004.01-2006.03		Centre	Bus RWD FXFA		Center Bearing Support	538648
	2004.01-2006.03		Centre	Chassis Cabin RWD FXFA		Center Bearing Support	538648
	2004.01-2006.03		Centre	Van RWD FXFA		Center Bearing Support	538648
	2004.01-2006.03		Front	Bus RWD FXFA	6MT,Trans. code:MT82	Flexible Coupling	533418
	2004.01-2006.03		Front	Chassis Cabin RWD FXFA	6MT,Trans. code:MT82	Flexible Coupling	533418
	2004.01-2006.03		Front	Van RWD FXFA	6MT,Trans. code:MT82	Flexible Coupling	533418
	2004.01-2006.03		Front	Bus RWD FXFA	Trans. code:MT75,5MT	Flexible Coupling	533420
	2004.01-2006.03		Front	Chassis Cabin RWD FXFA	Trans. code:MT75,5MT	Flexible Coupling	533420
	2004.01-2006.03		Front	Van RWD FXFA	Trans. code:MT75,5MT	Flexible Coupling	533420
	2006.04-2014.08	6MT	Rear	Bus RWD JXFA/JXFC		Propshaft	PS900616
	2006.04-2014.08	6MT	Rear	Chassis Cabin RWD JXFA/JXFC	for OE No.:2001258	Propshaft	PS900616
	2006.04-2014.08	6MT	Rear	Van RWD JXFA/JXFC		Propshaft	PS900616
	2006.04-2014.08	6MT	Rear	Chassis Cabin RWD JXFA/JXFC	for OE No.:CC114K357CC	Propshaft	PS901673
	2006.04-2014.08		Centre	Bus RWD JXFA/JXFC		Center Bearing Support	538648
	2006.04-2014.08		Centre	Chassis Cabin RWD JXFA/JXFC		Center Bearing Support	538648
	2006.04-2014.08		Centre	Van RWD JXFA/JXFC		Center Bearing Support	538648
	2006.04-2014.08		Centre	Bus RWD JXFA/JXFC		Center Bearing Support Kit	538691S
	2006.04-2014.08		Centre	Chassis Cabin RWD JXFA/JXFC		Center Bearing Support Kit	538691S
	2006.04-2014.08		Centre	Van RWD JXFA/JXFC		Center Bearing Support Kit	538691S
	2006.04-2014.08		Front	Bus RWD JXFA/JXFC		Flexible Coupling	533418
	2006.04-2014.08		Front	Chassis Cabin RWD JXFA/JXFC		Flexible Coupling	533418
	2006.04-2014.08		Front	Van RWD JXFA/JXFC		Flexible Coupling	533418
	2006.04-2014.08		Front	Bus RWD JXFA/JXFC		Flexible Coupling	533420
	2006.04-2014.08		Front	Chassis Cabin RWD JXFA/JXFC		Flexible Coupling	533420
	2006.04-2014.08		Front	Van RWD JXFA/JXFC		Flexible Coupling	533420
2.4 (88 kw)	2000.01-2006.05	5MT	Rear	Chassis Cabin RWD D4FA		Propshaft	PS900235
	2000.01-2006.05		Centre	Bus RWD D4FA		Center Bearing Support	538648
	2000.01-2006.05		Centre	Chassis Cabin RWD D4FA		Center Bearing Support	538648
	2000.01-2006.05		Centre	Van RWD D4FA		Center Bearing Support	538648
	2000.01-2006.05		Front	Bus RWD D4FA	6MT,Trans. code:MT82	Flexible Coupling	533418
	2000.01-2006.05		Front	Chassis Cabin RWD D4FA	6MT,Trans. code:MT82	Flexible Coupling	533418
	2000.01-2006.05		Front	Van RWD D4FA	6MT,Trans. code:MT82	Flexible Coupling	533418
	2000.01-2006.05		Front	Bus RWD D4FA	Trans. code:MT75,5MT	Flexible Coupling	533420

	YEAR	TRANSM.	FITTING POSITION	BODY STYLE & DRIVE TYPE & ENGINE	REMARKS	PRODUCT	GSP Ref.
FORD							
Transit 330							
2.4 (88 kw)	2000.01-2006.05		Front	Chassis Cabin RWD D4FA	Trans. code:MT75,5MT	Flexible Coupling	533420
	2000.01-2006.05		Front	Van RWD D4FA	Trans. code:MT75,5MT	Flexible Coupling	533420
2.4 (92 kw)	2001.07-2006.05	5MT	Rear	Chassis Cabin RWD DOFA		Propshaft	PS900235
	2001.07-2006.05		Centre	Chassis Cabin RWD DOFA		Center Bearing Support	538648
	2001.07-2006.05		Front	Chassis Cabin RWD DOFA	6MT,Trans. code:MT82	Flexible Coupling	533418
	2001.07-2006.05		Front	Chassis Cabin RWD DOFA	Trans. code:MT75,5MT	Flexible Coupling	533420
	2001.10-2006.03		Centre	Bus RWD DOFA		Center Bearing Support	538648
	2001.10-2006.03		Centre	Van RWD DOFA		Center Bearing Support	538648
	2001.10-2006.03		Front	Bus RWD DOFA	6MT,Trans. code:MT82	Flexible Coupling	533418
	2001.10-2006.03		Front	Van RWD DOFA	6MT,Trans. code:MT82	Flexible Coupling	533418
	2001.10-2006.03		Front	Bus RWD DOFA	Trans. code:MT75,5MT	Flexible Coupling	533420
	2001.10-2006.03		Front	Van RWD DOFA	Trans. code:MT75,5MT	Flexible Coupling	533420
2.4 (101 kw)	2003.09-2006.03		Centre	Bus RWD H9FA		Center Bearing Support	538648
	2003.09-2006.03		Centre	Van RWD H9FA		Center Bearing Support	538648
	2003.09-2006.03		Front	Bus RWD H9FA	6MT,Trans. code:MT82	Flexible Coupling	533418
	2003.09-2006.03		Front	Van RWD H9FA	6MT,Trans. code:MT82	Flexible Coupling	533418
	2003.09-2006.03		Front	Bus RWD H9FA	Trans. code:MT75,5MT	Flexible Coupling	533420
	2003.09-2006.03		Front	Van RWD H9FA	Trans. code:MT75,5MT	Flexible Coupling	533420
	2004.03-2006.05	6MT	Rear	Chassis Cabin RWD H9FA		Propshaft	PS900235
	2004.03-2006.05		Centre	Chassis Cabin RWD H9FA		Center Bearing Support	538648
	2004.03-2006.05		Front	Chassis Cabin RWD H9FA	6MT,Trans. code:MT82	Flexible Coupling	533418
	2004.03-2006.05		Front	Chassis Cabin RWD H9FA	Trans. code:MT75,5MT	Flexible Coupling	533420
2.4 (103 kw)	2006.04-2014.08	6MT	Rear	Chassis Cabin RWD H9FD		Propshaft	PS901673
	2006.04-2014.08		Centre	Bus RWD H9FD		Center Bearing Support	538648
	2006.04-2014.08		Centre	Chassis Cabin RWD H9FD		Center Bearing Support	538648
	2006.04-2014.08		Centre	Van RWD H9FD		Center Bearing Support	538648
	2006.04-2014.08		Centre	Bus RWD H9FD		Center Bearing Support Kit	538691S
	2006.04-2014.08		Centre	Chassis Cabin RWD H9FD		Center Bearing Support Kit	538691S
	2006.04-2014.08		Centre	Van RWD H9FD		Center Bearing Support Kit	538691S
	2006.04-2014.08		Front	Bus RWD H9FD	6MT,Trans. code:MT82	Flexible Coupling	533418
	2006.04-2014.08		Front	Chassis Cabin RWD H9FD	6MT	Flexible Coupling	533418
	2006.04-2014.08		Front	Van RWD H9FD	6MT	Flexible Coupling	533418
	2006.04-2014.08		Front	Bus RWD H9FD	Trans. code:MT75,5MT	Flexible Coupling	533420
	2006.04-2014.08		Front	Chassis Cabin RWD H9FD	Trans. code:MT75,5MT	Flexible Coupling	533420
	2006.04-2014.08		Front	Van RWD H9FD	Trans. code:MT75,5MT	Flexible Coupling	533420
	2006.07-2014.08		Centre	Bus 4WD H9FB		Center Bearing Support	538648
	2006.07-2014.08		Centre	Bus 4WD H9FB		Center Bearing Support Kit	538691S
	2006.07-2014.08		Front	Bus 4WD H9FB	6MT	Flexible Coupling	533418
	2006.07-2014.08		Front	Bus 4WD H9FB	Trans. code:MT75,5MT	Flexible Coupling	533420
	2006.11-2014.08	6MT	Rear	Chassis Cabin 4WD H9FB		Propshaft	PS901673
	2006.11-2014.08		Centre	Chassis Cabin 4WD H9FB		Center Bearing Support	538648
	2006.11-2014.08		Centre	Van 4WD H9FB		Center Bearing Support	538648
	2006.11-2014.08		Centre	Chassis Cabin 4WD H9FB		Center Bearing Support Kit	538691S
	2006.11-2014.08		Centre	Van 4WD H9FB		Center Bearing Support Kit	538691S
	2006.11-2014.08		Front	Chassis Cabin 4WD H9FB	6MT	Flexible Coupling	533418
	2006.11-2014.08		Front	Van 4WD H9FB	6MT	Flexible Coupling	533418
	2006.11-2014.08		Front	Chassis Cabin 4WD H9FB	Trans. code:MT75,5MT	Flexible Coupling	533420
	2006.11-2014.08		Front	Van 4WD H9FB	Trans. code:MT75,5MT	Flexible Coupling	533420
Transit 350							
2.0 (74 kw)	2000.06-2006.05		Centre	Chassis Cabin FWD ABFA		Center Bearing Support	538648
	2000.06-2006.05		Centre	Van FWD ABFA		Center Bearing Support	538648
2.0 (77 kw)	2016.03-		Centre	Chassis Cabin RWD YLR6		Center Bearing Support	538648
	2016.03-		Centre	Van RWD BJRA/YLR6/YLRA		Center Bearing Support	538648
	2016.03-		Front	Chassis Cabin RWD YLR6		Flexible Coupling	533418
	2016.03-		Front	Van RWD BJRA/YLR6/YLRA		Flexible Coupling	533418
2.0 (92 kw)	2000.06-2006.05		Centre	Chassis Cabin FWD FIFA		Center Bearing Support	538648
	2000.06-2006.05		Centre	Van FWD FIFA		Center Bearing Support	538648
2.0 (96 kw)	2016.03-	6MT	Rear	Chassis Cabin RWD BKRA/YMHA/YMR6		Propshaft	PS900615
	2016.03-		Centre	Chassis Cabin RWD BKRA/YMHA/YMR6		Center Bearing Support	538648
	2016.03-		Centre	Van 4WD BKRA/YMR6/YMRA		Center Bearing Support	538648
	2016.03-		Front	Chassis Cabin RWD BKRA/YMHA/YMR6		Flexible Coupling	533418
	2016.03-		Front	Van FWD BKFA/BKFB/YMF6/YMFA/YMFB/YMFS		Flexible Coupling	533418
	2016.03-		Front	Van 4WD BKRA/YMR6/YMRA		Flexible Coupling	533418
	2017.01-		Centre	Chassis Cabin 4WD BKRA/YMR6/YMRA		Center Bearing Support	538648

	YEAR	TRANSM.	FITTING POSITION	BODY STYLE & DRIVE TYPE & ENGINE	REMARKS	PRODUCT	GSP Ref.
FORD **Transit 350**							
2.0 (96 kw)	2017.01-		Front	Chassis Cabin 4WD BKRA/YMR6/YMRA		Flexible Coupling	533418
	2019.05-	6MT	Rear	Van RWD BKRA/YMHA		Propshaft	PS900615
	2019.05-		Centre	Chassis Cabin RWD BKRB		Center Bearing Support	538648
	2019.05-		Centre	Van RWD BKRB		Center Bearing Support	538648
	2019.05-		Centre	Van RWD BKRA/YMHA		Center Bearing Support	538648
	2019.05-		Centre	Bus RWD BKHA/YMHA		Center Bearing Support	538648
	2019.05-		Front	Chassis Cabin RWD BKRB		Flexible Coupling	533418
	2019.05-		Front	Van RWD BKRB		Flexible Coupling	533418
	2019.05-		Front	Van RWD BKRA/YMHA		Flexible Coupling	533418
	2019.05-		Front	Bus RWD BKHA/YMHA		Flexible Coupling	533418
2.0 (125 kw)	2016.03-		Centre	Chassis Cabin RWD BLHA/BLRA/YNR6		Center Bearing Support	538648
	2016.03-		Centre	Van RWD BLHA/BLRA/YNR6		Center Bearing Support	538648
	2016.03-		Front	Chassis Cabin RWD BLHA/BLRA/YNR6		Flexible Coupling	533418
	2016.03-		Front	Van RWD BLHA/BLRA/YNR6		Flexible Coupling	533418
	2016.03-2024.06		Centre	Van 4WD BLRA/YNR6/YNRB		Center Bearing Support	538648
	2016.03-2024.06		Front	Van FWD BLFA/BLFB/YNF6/YNFA/YNFB/YNFS		Flexible Coupling	533418
	2016.03-2024.06		Front	Van 4WD BLRA/YNR6/YNRB		Flexible Coupling	533418
	2017.01-2024.06		Centre	Chassis Cabin 4WD BLRA/YNR6/YNRB		Center Bearing Support	538648
	2017.01-2024.06		Front	Chassis Cabin 4WD BLRA/YNR6/YNRB		Flexible Coupling	533418
	2019.05-		Centre	Chassis Cabin RWD BLRB		Center Bearing Support	538648
	2019.05-		Centre	Van RWD BLRB		Center Bearing Support	538648
	2019.05-		Centre	Bus RWD BLHA/YNHA		Center Bearing Support	538648
	2019.05-		Front	Chassis Cabin RWD BLRB		Flexible Coupling	533418
	2019.05-		Front	Van RWD BLRB		Flexible Coupling	533418
	2019.05-		Front	Bus RWD BLHA/YNHA		Flexible Coupling	533418
2.0 (136 kw)	2019.05-		Front	Chassis Cabin RWD BCRA/BCRB		Flexible Coupling	533418
	2019.05-		Front	Van RWD BCRA/BCRB		Flexible Coupling	533418
2.2 (74 kw)	2011.10-2014.08	5MT	Rear	Bus RWD DRRA/DRRB/DRRC		Propshaft	PS901359
	2011.10-2014.08	6MT	Rear	Bus RWD DRRA/DRRB/DRRC		Propshaft	PS900616
	2011.10-2014.08	6MT	Rear	Chassis Cabin RWD DRRA/DRRB/DRRC	for OE No.:CC114K357DD	Propshaft	PS900616
	2011.10-2014.08	6MT	Rear	Van RWD DRRA/DRRB/DRRC		Propshaft	PS900616
	2011.10-2014.08	6MT	Rear	Chassis Cabin RWD DRRA/DRRB/DRRC	Date from:2013.01;for OE No.:CC114K357CC	Propshaft	PS901673
	2011.10-2014.08		Centre	Bus RWD DRRA/DRRB/DRRC		Center Bearing Support	538648
	2011.10-2014.08		Centre	Van RWD DRRA/DRRB/DRRC		Center Bearing Support	538648
	2011.10-2014.08		Front	Bus RWD DRRA/DRRB/DRRC	6MT	Flexible Coupling	533418
	2011.10-2014.08		Front	Chassis Cabin RWD DRRA/DRRB/DRRC	6MT	Flexible Coupling	533418
	2011.10-2014.08		Front	Van RWD DRRA/DRRB/DRRC	6MT	Flexible Coupling	533418
	2011.10-2014.08		Front	Bus RWD DRRA/DRRB/DRRC	Trans. code:MT75,5MT	Flexible Coupling	533420
	2011.10-2014.08		Front	Chassis Cabin RWD DRRA/DRRB/DRRC	Trans. code:MT75,5MT	Flexible Coupling	533420
	2011.10-2014.08		Front	Van RWD DRRA/DRRB/DRRC	Trans. code:MT75,5MT	Flexible Coupling	533420
	2013.08-2018.12		Centre	Chassis Cabin RWD DRR5		Center Bearing Support	538648
	2013.08-2018.12		Centre	Van RWD DRR5		Center Bearing Support	538648
	2013.08-2018.12		Centre	Bus RWD DRR5		Center Bearing Support	538648
	2013.08-2018.12		Front	Chassis Cabin RWD DRR5		Flexible Coupling	533418
	2013.08-2018.12		Front	Van RWD DRR5		Flexible Coupling	533418
	2013.08-2018.12		Front	Bus RWD DRR5		Flexible Coupling	533418
2.2 (81 kw)	2006.04-2014.08		Centre	Bus FWD QVFA		Center Bearing Support	538648
	2006.04-2014.08		Centre	Chassis Cabin FWD QVFA		Center Bearing Support	538648
	2006.04-2014.08		Centre	Van FWD QVFA		Center Bearing Support	538648
2.2 (85 kw)	2008.10-2014.08		Centre	Bus FWD SRFA/SRFB/SRFC/SRFD/SRFE		Center Bearing Support	538648
	2008.10-2014.08		Centre	Chassis Cabin FWD SRFA/SRFB/SRFC/SRFD/SRFE		Center Bearing Support	538648
	2008.10-2014.08		Centre	Van FWD SRFA/SRFB/SRFC/SRFD/SRFE		Center Bearing Support	538648
2.2 (92 kw)	2011.09-2014.12	5MT	Rear	Bus RWD CYRA		Propshaft	PS901359
	2011.09-2014.12	6MT	Rear	Bus RWD CYRA		Propshaft	PS900617
	2011.09-2014.12	6MT	Rear	Van RWD CYRA		Propshaft	PS900617
	2011.09-2014.12		Centre	Bus RWD CYRA		Center Bearing Support	538648
	2011.09-2014.12		Centre	Van RWD CYRA		Center Bearing Support	538648
	2011.09-2014.12		Front	Bus RWD CYRA		Flexible Coupling	533418
	2011.09-2014.12		Front	Van RWD CYRA		Flexible Coupling	533418
	2011.09-2014.12		Front	Bus RWD CYRA		Flexible Coupling	533420
	2011.09-2014.12		Front	Van RWD CYRA		Flexible Coupling	533420
	2011.10-2014.08	6MT	Rear	Chassis Cabin RWD CYRA	for OE No.:CC114K357FD	Propshaft	PS900617
	2011.10-2014.08	6MT	Rear	Chassis Cabin 4WD CYRB/CYRC	Date from:2013.01	Propshaft	PS901673
	2011.10-2014.08	6MT	Rear	Chassis Cabin RWD CYRA	Date from:2013.01,Model:Transit 330;for OE No.:CC11-4K357-CC	Propshaft	PS901673

	YEAR	TRANSM.	FITTING POSITION	BODY STYLE & DRIVE TYPE & ENGINE	REMARKS	PRODUCT	GSP Ref.
FORD **Transit 350**							
2.2 (92 kw)	2011.10-2014.08		Front	Chassis Cabin 4WD CYRB/CYRC	6MT	Flexible Coupling	533418
	2011.10-2014.08		Front	Chassis Cabin RWD CYRA		Flexible Coupling	533418
	2011.10-2014.08		Front	Van 4WD CYRB/CYRC	6MT	Flexible Coupling	533418
	2011.10-2014.08		Front	Chassis Cabin 4WD CYRB/CYRC	Trans. code:MT75,5MT	Flexible Coupling	533420
	2011.10-2014.08		Front	Chassis Cabin RWD CYRA		Flexible Coupling	533420
	2011.10-2014.08		Front	Van 4WD CYRB/CYRC	Trans. code:MT75,5MT	Flexible Coupling	533420
	2013.08-2018.12	6MT	Rear	Bus RWD USR6		Propshaft	PS900615
	2013.08-2018.12	6MT	Rear	Chassis Cabin RWD CYR5/USR6		Propshaft	PS900615
	2013.08-2018.12	6MT	Rear	Van RWD CYR5/USR6		Propshaft	PS900615
	2013.08-2018.12		Centre	Bus RWD USR6		Center Bearing Support	538648
	2013.08-2018.12		Centre	Chassis Cabin 4WD CY24/CYR5		Center Bearing Support	538648
	2013.08-2018.12		Centre	Chassis Cabin RWD CYR5/USR6		Center Bearing Support	538648
	2013.08-2018.12		Centre	Van 4WD CY24/CYR5		Center Bearing Support	538648
	2013.08-2018.12		Centre	Van RWD CYR5/USR6		Center Bearing Support	538648
	2013.08-2018.12		Centre	Bus 4WD CY24/CYR5		Center Bearing Support	538648
	2013.08-2018.12		Front	Bus RWD USR6		Flexible Coupling	533418
	2013.08-2018.12		Front	Chassis Cabin 4WD CY24/CYR5		Flexible Coupling	533418
	2013.08-2018.12		Front	Chassis Cabin RWD CYR5/USR6	Inner diameter:64.5mm	Flexible Coupling	533418
	2013.08-2018.12		Front	Van 4WD CY24/CYR5		Flexible Coupling	533418
	2013.08-2018.12		Front	Van RWD CYR5/USR6		Flexible Coupling	533418
	2013.08-2018.12		Front	Bus 4WD CY24/CYR5		Flexible Coupling	533418
	2013.08-2018.12		Front	Chassis Cabin RWD CYR5/USR6	Inner diameter:56mm	Flexible Coupling	533420
2.2 (96 kw)	2006.04-2014.08		Centre	Bus FWD QWFA		Center Bearing Support	538648
	2006.04-2014.08		Centre	Chassis Cabin FWD QWFA		Center Bearing Support	538648
	2006.04-2014.08		Centre	Van FWD QWFA		Center Bearing Support	538648
	2006.04-2014.08		Centre	Van FWD QWFA		Center Bearing Support Kit	538691S
2.2 (100 kw)	2011.09-2014.08		Centre	Bus RWD USRA/USRB		Center Bearing Support	538648
	2011.09-2014.08		Centre	Bus RWD USRA/USRB		Center Bearing Support Kit	538691S
	2011.09-2014.08		Front	Bus RWD USRA/USRB	6MT	Flexible Coupling	533418
	2011.09-2014.08		Front	Bus RWD USRA/USRB	Trans. code:MT75,5MT	Flexible Coupling	533420
2.2 (103 kw)	2007.09-2014.08		Centre	Bus FWD PGFA/PGFB/UHFA/UHFB/UHFC		Center Bearing Support	538648
	2007.09-2014.08		Centre	Van FWD PGFA/PGFB/UHFA/UHFB/UHFC		Center Bearing Support	538648
	2007.10-2014.08		Centre	Chassis Cabin FWD PGFA/PGFB/UHFA/UHFB/UHFC		Center Bearing Support	538648
2.2 (114 kw)	2011.10-2014.08	6MT	Rear	Chassis Cabin RWD CVRA/CVRB/CVRC	Model:Transit 460;Date from:2013.01	Propshaft	PS901673
	2011.10-2014.08		Centre	Van RWD CVRA/CVRB/CVRC		Center Bearing Support	538648
	2011.10-2014.08		Front	Chassis Cabin RWD CVRA/CVRB/CVRC	6MT	Flexible Coupling	533418
	2011.10-2014.08		Front	Van RWD CVRA/CVRB/CVRC	6MT	Flexible Coupling	533418
	2011.10-2014.08		Front	Chassis Cabin RWD CVRA/CVRB/CVRC	Trans. code:MT75,5MT	Flexible Coupling	533420
	2011.10-2014.08		Front	Van RWD CVRA/CVRB/CVRC	Trans. code:MT75,5MT	Flexible Coupling	533420
	2013.08-2018.12		Centre	Bus RWD CV24/CVR5/UYR6		Center Bearing Support	538648
	2013.08-2018.12		Centre	Chassis Cabin 4WD CV24/CVR5		Center Bearing Support	538648
	2013.08-2018.12		Centre	Chassis Cabin RWD CV24/CVR5/UYR6		Center Bearing Support	538648
	2013.08-2018.12		Centre	Van RWD CV24/CVR5/UYR6		Center Bearing Support	538648
	2013.08-2018.12		Front	Bus RWD CV24/CVR5/UYR6		Flexible Coupling	533418
	2013.08-2018.12		Front	Chassis Cabin 4WD CV24/CVR5		Flexible Coupling	533418
	2013.08-2018.12		Front	Chassis Cabin RWD CV24/CVR5/UYR6	Inner diameter:64.5mm	Flexible Coupling	533418
	2013.08-2018.12		Front	Van RWD CV24/CVR5/UYR6		Flexible Coupling	533418
	2013.08-2018.12		Front	Chassis Cabin RWD CV24/CVR5/UYR6	Inner diameter:56mm	Flexible Coupling	533420
	2015.08-2018.12		Centre	Van 4WD CV24/CVR5		Center Bearing Support	538648
	2015.08-2018.12		Front	Van 4WD CV24/CVR5	Inner diameter:64.5mm	Flexible Coupling	533418
	2015.08-2018.12		Front	Bus 4WD CV24/CVR5		Flexible Coupling	533418
	2015.08-2018.12		Front	Van 4WD CV24/CVR5	Inner diameter:56mm	Flexible Coupling	533420
2.3 (105 kw)	2001.03-2006.03		Front	Van RWD E5FC	For OE No.4165078	Flexible Coupling	533418
	2001.03-2006.03		Front	Van RWD E5FC	For OE No.4393343	Flexible Coupling	533420
2.3 (107 kw)	2000.01-2006.03	5MT	Rear	Chassis Cabin RWD E5FA		Propshaft	PS900235
	2000.01-2006.03		Centre	Chassis Cabin RWD E5FA		Center Bearing Support	538648
	2000.01-2006.03		Front	Chassis Cabin RWD E5FA	6MT,Trans. code:MT82	Flexible Coupling	533418
	2000.01-2006.03		Front	Chassis Cabin RWD E5FA	Trans. code:MT75,5MT	Flexible Coupling	533420
	2000.08-2006.03		Centre	Bus RWD E5FA/E5FC		Center Bearing Support	538648
	2000.08-2006.03		Front	Bus RWD E5FA/E5FC	6MT,Trans. code:MT82	Flexible Coupling	533418
	2000.08-2006.03		Front	Bus RWD E5FA/E5FC	Trans. code:MT75,5MT	Flexible Coupling	533420
	2001.04-2006.05		Centre	Van RWD E5FA/E5FC		Center Bearing Support	538648
	2001.04-2006.05		Front	Van RWD E5FA/E5FC	6MT,Trans. code:MT82	Flexible Coupling	533418
	2001.04-2006.05		Front	Van RWD E5FA/E5FC	Trans. code:MT75,5MT	Flexible Coupling	533420

	YEAR	TRANSM.	FITTING POSITION	BODY STYLE & DRIVE TYPE & ENGINE	REMARKS	PRODUCT	GSP Ref.
FORD **Transit 350**							
2.3 (107 kw)	2006.04-2014.08		Centre	Chassis Cabin RWD GZFB		Center Bearing Support	538648
	2006.04-2014.08		Front	Chassis Cabin RWD GZFB	6MT	Flexible Coupling	533418
	2006.04-2014.08		Front	Chassis Cabin RWD GZFB	Trans. code:MT75,5MT	Flexible Coupling	533420
	2006.07-2014.08	5MT	Rear	Van RWD GZFA	Date to:2010.05	Propshaft	PS901359
	2006.07-2014.08		Centre	Van RWD GZFA		Center Bearing Support	538648
	2006.07-2014.08		Front	Van RWD GZFA	6MT	Flexible Coupling	533418
	2006.07-2014.08		Front	Van RWD GZFA	Trans. code:MT75,5MT	Flexible Coupling	533420
2.4 (55 kw)	2000.01-2003.08	5MT	Rear	Chassis Cabin RWD F4FA		Propshaft	PS900235
	2000.01-2003.08		Centre	Chassis Cabin RWD F4FA		Center Bearing Support	538648
	2000.01-2003.08		Front	Chassis Cabin RWD F4FA	6MT,Trans. code:MT82	Flexible Coupling	533418
	2000.01-2003.08		Front	Chassis Cabin RWD F4FA	Trans. code:MT75,5MT	Flexible Coupling	533420
	2000.01-2006.05		Centre	Van RWD F4FA		Center Bearing Support	538648
	2000.01-2006.05		Front	Van RWD F4FA	6MT,Trans. code:MT82	Flexible Coupling	533418
	2000.01-2006.05		Front	Van RWD F4FA	Trans. code:MT75,5MT	Flexible Coupling	533420
	2000.09-2003.08		Centre	Bus RWD F4FA		Center Bearing Support	538648
	2000.09-2003.08		Front	Bus RWD F4FA	6MT,Trans. code:MT82	Flexible Coupling	533418
	2000.09-2003.08		Front	Bus RWD F4FA	Trans. code:MT75,5MT	Flexible Coupling	533420
2.4 (66 kw)	2000.01-2006.03		Centre	Van RWD D2FA/D2FB		Center Bearing Support	538648
	2000.01-2006.03		Front	Van RWD D2FA/D2FB	6MT,Trans. code:MT82	Flexible Coupling	533418
	2000.01-2006.03		Front	Van RWD D2FA/D2FB	Trans. code:MT75,5MT	Flexible Coupling	533420
	2000.01-2006.05	5MT	Rear	Chassis Cabin RWD D2FA/D2FB		Propshaft	PS900235
	2000.01-2006.05		Centre	Chassis Cabin RWD D2FA/D2FB		Center Bearing Support	538648
	2000.01-2006.05		Front	Chassis Cabin RWD D2FA/D2FB	6MT,Trans. code:MT82	Flexible Coupling	533418
	2000.01-2006.05		Front	Chassis Cabin RWD D2FA/D2FB	Trans. code:MT75,5MT	Flexible Coupling	533420
	2001.10-2006.03		Centre	Bus RWD D2FA/D2FB		Center Bearing Support	538648
	2001.10-2006.03		Front	Bus RWD D2FA/D2FB	6MT,Trans. code:MT82	Flexible Coupling	533418
	2001.10-2006.03		Front	Bus RWD D2FA/D2FB	Trans. code:MT75,5MT	Flexible Coupling	533420
2.4 (74 kw)	2006.04-2014.08	5MT	Rear	Bus RWD PHFA/PHFC	Date to:2010.05	Propshaft	PS901359
	2006.04-2014.08	5MT	Rear	Van RWD PHFA/PHFC	Date to:2010.05	Propshaft	PS901359
	2006.04-2014.08	6MT	Rear	Chassis Cabin RWD PHFA/PHFC		Propshaft	PS901673
	2006.04-2014.08		Centre	Bus RWD PHFA/PHFC		Center Bearing Support	538648
	2006.04-2014.08		Centre	Chassis Cabin RWD PHFA/PHFC		Center Bearing Support	538648
	2006.04-2014.08		Centre	Van RWD PHFA/PHFC		Center Bearing Support	538648
	2006.04-2014.08		Centre	Bus RWD PHFA/PHFC		Center Bearing Support Kit	538691S
	2006.04-2014.08		Centre	Chassis Cabin RWD PHFA/PHFC		Center Bearing Support Kit	538691S
	2006.04-2014.08		Centre	Van RWD PHFA/PHFC		Center Bearing Support Kit	538691S
	2006.04-2014.08		Front	Bus RWD PHFA/PHFC	6MT,Trans. code:MT82	Flexible Coupling	533418
	2006.04-2014.08		Front	Chassis Cabin RWD PHFA/PHFC	6MT	Flexible Coupling	533418
	2006.04-2014.08		Front	Van RWD PHFA/PHFC	6MT	Flexible Coupling	533418
	2006.04-2014.08		Front	Bus RWD PHFA/PHFC	Trans. code:MT75,5MT	Flexible Coupling	533420
	2006.04-2014.08		Front	Chassis Cabin RWD PHFA/PHFC	Trans. code:MT75,5MT	Flexible Coupling	533420
	2006.04-2014.08		Front	Van RWD PHFA/PHFC	Trans. code:MT75,5MT	Flexible Coupling	533420
2.4 (85 kw)	2004.01-2006.03	5MT	Rear	Chassis Cabin RWD FXFA		Propshaft	PS900235
	2004.01-2006.03		Centre	Bus RWD FXFA		Center Bearing Support	538648
	2004.01-2006.03		Centre	Chassis Cabin RWD FXFA		Center Bearing Support	538648
	2004.01-2006.03		Centre	Van RWD FXFA		Center Bearing Support	538648
	2004.01-2006.03		Front	Bus RWD FXFA	6MT,Trans. code:MT82	Flexible Coupling	533418
	2004.01-2006.03		Front	Chassis Cabin RWD FXFA	6MT,Trans. code:MT82	Flexible Coupling	533418
	2004.01-2006.03		Front	Van RWD FXFA	6MT,Trans. code:MT82	Flexible Coupling	533418
	2004.01-2006.03		Front	Bus RWD FXFA	Trans. code:MT75,5MT	Flexible Coupling	533420
	2004.01-2006.03		Front	Chassis Cabin RWD FXFA	Trans. code:MT75,5MT	Flexible Coupling	533420
	2004.01-2006.03		Front	Van RWD FXFA	Trans. code:MT75,5MT	Flexible Coupling	533420
	2006.04-2014.08	6MT	Rear	Bus RWD JXFA/JXFC		Propshaft	PS900616
	2006.04-2014.08	6MT	Rear	Chassis Cabin RWD JXFA/JXFC	for OE No.:2001258	Propshaft	PS900616
	2006.04-2014.08	6MT	Rear	Van RWD JXFA/JXFC		Propshaft	PS900616
	2006.04-2014.08	6MT	Rear	Chassis Cabin RWD JXFA/JXFC	for OE No.:CC114K357CC	Propshaft	PS901673
	2006.04-2014.08		Centre	Bus RWD JXFA/JXFC		Center Bearing Support	538648
	2006.04-2014.08		Centre	Chassis Cabin RWD JXFA/JXFC		Center Bearing Support	538648
	2006.04-2014.08		Centre	Van RWD JXFA/JXFC		Center Bearing Support	538648
	2006.04-2014.08		Centre	Bus RWD JXFA/JXFC		Center Bearing Support Kit	538691S
	2006.04-2014.08		Centre	Chassis Cabin RWD JXFA/JXFC		Center Bearing Support Kit	538691S
	2006.04-2014.08		Centre	Van RWD JXFA/JXFC		Center Bearing Support Kit	538691S
	2006.04-2014.08		Front	Bus RWD JXFA/JXFC		Flexible Coupling	533418
	2006.04-2014.08		Front	Chassis Cabin RWD JXFA/JXFC		Flexible Coupling	533418

	YEAR	TRANSM.	FITTING POSITION	BODY STYLE & DRIVE TYPE & ENGINE	REMARKS	PRODUCT	GSP Ref.
FORD **Transit 350**							
2.4 (85 kw)	2006.04-2014.08		Front	Van RWD JXFA/JXFC		Flexible Coupling	533418
	2006.04-2014.08		Front	Bus RWD JXFA/JXFC		Flexible Coupling	533420
	2006.04-2014.08		Front	Chassis Cabin RWD JXFA/JXFC		Flexible Coupling	533420
	2006.04-2014.08		Front	Van RWD JXFA/JXFC		Flexible Coupling	533420
2.4 (88 kw)	2000.01-2006.05	5MT	Rear	Chassis Cabin RWD D4FA		Propshaft	PS900235
	2000.01-2006.05		Centre	Bus RWD D4FA		Center Bearing Support	538648
	2000.01-2006.05		Centre	Chassis Cabin RWD D4FA		Center Bearing Support	538648
	2000.01-2006.05		Front	Bus RWD D4FA	6MT,Trans. code:MT82	Flexible Coupling	533418
	2000.01-2006.05		Front	Chassis Cabin RWD D4FA	6MT,Trans. code:MT82	Flexible Coupling	533418
	2000.01-2006.05		Front	Bus RWD D4FA	Trans. code:MT75,5MT	Flexible Coupling	533420
	2000.01-2006.05		Front	Chassis Cabin RWD D4FA	Trans. code:MT75,5MT	Flexible Coupling	533420
	2000.08-2003.08		Centre	Van RWD D4FA		Center Bearing Support	538648
	2000.08-2003.08		Front	Van RWD D4FA	6MT,Trans. code:MT82	Flexible Coupling	533418
	2000.08-2003.08		Front	Van RWD D4FA	Trans. code:MT75,5MT	Flexible Coupling	533420
2.4 (92 kw)	2001.07-2006.05	5MT	Rear	Chassis Cabin RWD DOFA		Propshaft	PS900235
	2001.07-2006.05		Centre	Chassis Cabin RWD DOFA		Center Bearing Support	538648
	2001.07-2006.05		Front	Chassis Cabin RWD DOFA	6MT,Trans. code:MT82	Flexible Coupling	533418
	2001.07-2006.05		Front	Chassis Cabin RWD DOFA	Trans. code:MT75,5MT	Flexible Coupling	533420
	2001.10-2006.03		Centre	Bus RWD DOFA		Center Bearing Support	538648
	2001.10-2006.03		Centre	Van RWD DOFA		Center Bearing Support	538648
	2001.10-2006.03		Front	Bus RWD DOFA	6MT,Trans. code:MT82	Flexible Coupling	533418
	2001.10-2006.03		Front	Van RWD DOFA	6MT,Trans. code:MT82	Flexible Coupling	533418
	2001.10-2006.03		Front	Bus RWD DOFA	Trans. code:MT75,5MT	Flexible Coupling	533420
	2001.10-2006.03		Front	Van RWD DOFA	Trans. code:MT75,5MT	Flexible Coupling	533420
2.4 (101 kw)	2003.09-2006.03		Centre	Bus RWD H9FA		Center Bearing Support	538648
	2003.09-2006.03		Centre	Van RWD H9FA		Center Bearing Support	538648
	2003.09-2006.03		Front	Bus RWD H9FA	6MT,Trans. code:MT82	Flexible Coupling	533418
	2003.09-2006.03		Front	Van RWD H9FA	6MT,Trans. code:MT82	Flexible Coupling	533418
	2003.09-2006.03		Front	Bus RWD H9FA	Trans. code:MT75,5MT	Flexible Coupling	533420
	2003.09-2006.03		Front	Van RWD H9FA	Trans. code:MT75,5MT	Flexible Coupling	533420
	2004.03-2006.05	6MT	Rear	Chassis Cabin RWD H9FA		Propshaft	PS900235
	2004.03-2006.05		Centre	Chassis Cabin RWD H9FA		Center Bearing Support	538648
	2004.03-2006.05		Front	Chassis Cabin RWD H9FA	6MT,Trans. code:MT82	Flexible Coupling	533418
	2004.03-2006.05		Front	Chassis Cabin RWD H9FA	Trans. code:MT75,5MT	Flexible Coupling	533420
2.4 (103 kw)	2006.04-2014.08	6MT	Rear	Chassis Cabin RWD H9FB/H9FD		Propshaft	PS901673
	2006.04-2014.08	6MT	Rear	Chassis Cabin 4WD H9FB		Propshaft	PS901673
	2006.04-2014.08		Centre	Bus RWD H9FD		Center Bearing Support	538648
	2006.04-2014.08		Centre	Chassis Cabin RWD H9FB/H9FD		Center Bearing Support	538648
	2006.04-2014.08		Centre	Van RWD H9FB/H9FD		Center Bearing Support	538648
	2006.04-2014.08		Centre	Chassis Cabin 4WD H9FB		Center Bearing Support	538648
	2006.04-2014.08		Centre	Van 4WD H9FB		Center Bearing Support	538648
	2006.04-2014.08		Centre	Bus RWD H9FD		Center Bearing Support Kit	538691S
	2006.04-2014.08		Centre	Chassis Cabin RWD H9FB/H9FD		Center Bearing Support Kit	538691S
	2006.04-2014.08		Centre	Van RWD H9FB/H9FD		Center Bearing Support Kit	538691S
	2006.04-2014.08		Centre	Chassis Cabin 4WD H9FB		Center Bearing Support Kit	538691S
	2006.04-2014.08		Centre	Van 4WD H9FB		Center Bearing Support Kit	538691S
	2006.04-2014.08		Front	Bus RWD H9FD	6MT,Trans. code:MT82	Flexible Coupling	533418
	2006.04-2014.08		Front	Chassis Cabin RWD H9FB/H9FD	6MT	Flexible Coupling	533418
	2006.04-2014.08		Front	Van RWD H9FB/H9FD	6MT	Flexible Coupling	533418
	2006.04-2014.08		Front	Chassis Cabin 4WD H9FB	6MT	Flexible Coupling	533418
	2006.04-2014.08		Front	Van 4WD H9FB	6MT	Flexible Coupling	533418
	2006.04-2014.08		Front	Bus RWD H9FD	Trans. code:MT75,5MT	Flexible Coupling	533420
	2006.04-2014.08		Front	Chassis Cabin RWD H9FB/H9FD	Trans. code:MT75,5MT	Flexible Coupling	533420
	2006.04-2014.08		Front	Van RWD H9FB/H9FD	Trans. code:MT75,5MT	Flexible Coupling	533420
	2006.04-2014.08		Front	Chassis Cabin 4WD H9FB	Trans. code:MT75,5MT	Flexible Coupling	533420
	2006.04-2014.08		Front	Van 4WD H9FB	Trans. code:MT75,5MT	Flexible Coupling	533420
	2006.07-2014.08		Centre	Bus 4WD H9FB		Center Bearing Support	538648
	2006.07-2014.08		Centre	Bus 4WD H9FB		Center Bearing Support Kit	538691S
	2006.07-2014.08		Front	Bus 4WD H9FB	6MT	Flexible Coupling	533418
	2006.07-2014.08		Front	Bus 4WD H9FB	Trans. code:MT75,5MT	Flexible Coupling	533420
3.2 (147 kw)	2007.09-2014.08	6MT	Rear	Chassis Cabin RWD SAFA/SAFB		Propshaft	PS901673
	2007.09-2014.08		Centre	Chassis Cabin RWD SAFA/SAFB		Center Bearing Support	538648
	2007.09-2014.08		Centre	Van RWD SAFA/SAFB		Center Bearing Support	538648
	2007.09-2014.08		Centre	Chassis Cabin RWD SAFA/SAFB		Center Bearing Support Kit	538691S

	YEAR	TRANSM.	FITTING POSITION	BODY STYLE & DRIVE TYPE & ENGINE	REMARKS	PRODUCT	GSP Ref.
FORD							
Transit 350							
3.2 (147 kw)	2007.09-2014.08		Centre	Van RWD SAFA/SAFB		Center Bearing Support Kit	538691S
	2007.09-2014.08		Front	Chassis Cabin RWD SAFA/SAFB	6MT	Flexible Coupling	533418
	2007.09-2014.08		Front	Van RWD SAFA/SAFB	6MT	Flexible Coupling	533418
	2007.09-2014.08		Front	Chassis Cabin RWD SAFA/SAFB	Trans. code:MT75,5MT	Flexible Coupling	533420
	2007.09-2014.08		Front	Van RWD SAFA/SAFB	Trans. code:MT75,5MT	Flexible Coupling	533420
	2008.02-2014.08		Centre	Bus RWD SAFA/SAFB		Center Bearing Support	538648
	2008.02-2014.08		Centre	Bus RWD SAFA/SAFB		Center Bearing Support Kit	538691S
	2008.02-2014.08		Front	Bus RWD SAFA/SAFB	6MT,Trans. code:MT82	Flexible Coupling	533418
	2008.02-2014.08		Front	Bus RWD SAFA/SAFB	Trans. code:MT75,5MT	Flexible Coupling	533420
Transit 370							
2.2 (92 kw)	2013.08-2018.12	6MT	Rear	Bus RWD USR6		Propshaft	PS900615
	2013.08-2018.12		Centre	Bus RWD USR6		Center Bearing Support	538648
	2013.08-2018.12		Front	Bus RWD USR6		Flexible Coupling	533418
2.2 (100 kw)	2011.09-2014.08		Centre	Bus RWD USRA/USRB		Center Bearing Support	538648
	2011.09-2014.08		Centre	Bus RWD USRA/USRB		Center Bearing Support Kit	538691S
	2011.09-2014.08		Front	Bus RWD USRA/USRB	6MT	Flexible Coupling	533418
	2011.09-2014.08		Front	Bus RWD USRA/USRB	Trans. code:MT75,5MT	Flexible Coupling	533420
2.2 (114 kw)	2013.08-2018.12		Centre	Bus RWD CV24/CVR5/UYR6		Center Bearing Support	538648
	2013.08-2018.12		Front	Bus RWD CV24/CVR5/UYR6	6MT	Flexible Coupling	533418
2.4 (74 kw)	2006.04-2014.08		Centre	Bus RWD PHFA/PHFC		Center Bearing Support	538648
	2006.04-2014.08		Centre	Bus RWD PHFA/PHFC		Center Bearing Support Kit	538691S
	2006.04-2014.08		Front	Bus RWD PHFA/PHFC	6MT,Trans. code:MT82	Flexible Coupling	533418
	2006.04-2014.08		Front	Bus RWD PHFA/PHFC	Trans. code:MT75,5MT	Flexible Coupling	533420
2.4 (85 kw)	2006.04-2014.08	6MT	Rear	Bus RWD JXFA/JXFC		Propshaft	PS900616
	2006.04-2014.08		Centre	Bus RWD JXFA/JXFC		Center Bearing Support	538648
	2006.04-2014.08		Centre	Bus RWD JXFA/JXFC		Center Bearing Support Kit	538691S
	2006.04-2014.08		Front	Bus RWD JXFA/JXFC		Flexible Coupling	533418
	2006.04-2014.08		Front	Bus RWD JXFA/JXFC		Flexible Coupling	533420
2.4 (103 kw)	2006.04-2014.08		Centre	Bus RWD H9FD		Center Bearing Support	538648
	2006.04-2014.08		Centre	Bus RWD H9FD		Center Bearing Support Kit	538691S
	2006.04-2014.08		Front	Bus RWD H9FD	6MT,Trans. code:MT82	Flexible Coupling	533418
	2006.04-2014.08		Front	Bus RWD H9FD	Trans. code:MT75,5MT	Flexible Coupling	533420
	2006.11-2014.08		Centre	Bus 4WD H9FB		Center Bearing Support	538648
	2006.11-2014.08		Centre	Bus 4WD H9FB		Center Bearing Support Kit	538691S
	2006.11-2014.08		Front	Bus 4WD H9FB	6MT	Flexible Coupling	533418
	2006.11-2014.08		Front	Bus 4WD H9FB	Trans. code:MT75,5MT	Flexible Coupling	533420
Transit 410							
2.0 (96 kw)	2019.05-		Centre	Bus RWD BKHA/YMHA		Center Bearing Support	538648
	2019.05-		Front	Bus RWD BKHA/YMHA		Flexible Coupling	533418
2.0 (125 kw)	2019.05-		Centre	Bus RWD BLHA/YNHA		Center Bearing Support	538648
	2019.05-		Front	Bus RWD BLHA/YNHA		Flexible Coupling	533418
2.0 (136 kw)	2019.05-		Front	Van RWD BCRA/BCRB		Flexible Coupling	533418
2.2 (92 kw)	2013.08-2018.12	6MT	Rear	Bus RWD USR6		Propshaft	PS900615
	2013.08-2018.12		Centre	Bus RWD USR6		Center Bearing Support	538648
	2013.08-2018.12		Front	Bus RWD USR6		Flexible Coupling	533418
2.2 (114 kw)	2013.08-2018.12		Centre	Bus RWD CV24/CVR5/UYR6		Center Bearing Support	538648
	2013.08-2018.12		Front	Bus RWD CV24/CVR5/UYR6	6MT	Flexible Coupling	533418
Transit 430							
2.2 (92 kw)	2013.08-2018.12	6MT	Rear	Van RWD CYR5/USR6		Propshaft	PS900615
	2013.08-2018.12	6MT	Rear	Chassis Cabin RWD CYR5/USR6		Propshaft	PS900615
	2013.08-2018.12		Centre	Van RWD CYR5/USR6		Center Bearing Support	538648
	2013.08-2018.12		Centre	Chassis Cabin RWD CYR5/USR6		Center Bearing Support	538648
	2013.08-2018.12		Front	Van RWD CYR5/USR6		Flexible Coupling	533418
	2013.08-2018.12		Front	Chassis Cabin RWD CYR5/USR6	Inner diameter:64.5mm	Flexible Coupling	533418
	2013.08-2018.12		Front	Chassis Cabin RWD CYR5/USR6	Inner diameter:56mm	Flexible Coupling	533420
2.2 (99 kw)	2013.08-2018.12		Centre	Chassis Cabin RWD UHR5		Center Bearing Support	538648
	2013.08-2018.12		Front	Chassis Cabin RWD UHR5		Flexible Coupling	533418
2.2 (100 kw)	2011.09-2014.08		Centre	Bus RWD USRA/USRB		Center Bearing Support	538648
	2011.09-2014.08		Centre	Bus RWD USRA/USRB		Center Bearing Support Kit	538691S
	2011.09-2014.08		Front	Bus RWD USRA/USRB	6MT	Flexible Coupling	533418
	2011.09-2014.08		Front	Bus RWD USRA/USRB	Trans. code:MT75,5MT	Flexible Coupling	533420
2.2 (114 kw)	2012.01-2014.08		Front	Bus RWD CVRA/CVRB/CVRC	6MT	Flexible Coupling	533418
	2012.01-2014.08		Front	Bus RWD CVRA/CVRB/CVRC	5MT	Flexible Coupling	533420
	2013.08-2018.12		Centre	Chassis Cabin RWD CV24/CVR5/UYR6		Center Bearing Support	538648

	YEAR	TRANSM.	FITTING POSITION	BODY STYLE & DRIVE TYPE & ENGINE	REMARKS	PRODUCT	GSP Ref.
FORD **Transit 430**							
2.2 (114 kw)	2013.08-2018.12		Centre	Van RWD CV24/CVR5/UYR6		Center Bearing Support	538648
	2013.08-2018.12		Front	Chassis Cabin RWD CV24/CVR5/UYR6	Inner diameter:64.5mm	Flexible Coupling	533418
	2013.08-2018.12		Front	Van RWD CV24/CVR5/UYR6		Flexible Coupling	533418
	2013.08-2018.12		Front	Chassis Cabin RWD CV24/CVR5/UYR6	Inner diameter:56mm	Flexible Coupling	533420
2.4 (66 kw)	2000.01-2006.05	5MT	Rear	Chassis Cabin RWD D2FA/D2FB		Propshaft	PS900235
	2000.01-2006.05		Centre	Chassis Cabin RWD D2FA/D2FB		Center Bearing Support	538648
	2000.01-2006.05		Front	Chassis Cabin RWD D2FA/D2FB	6MT,Trans. code:MT82	Flexible Coupling	533418
	2000.01-2006.05		Front	Chassis Cabin RWD D2FA/D2FB	Trans. code:MT75,5MT	Flexible Coupling	533420
2.4 (74 kw)	2006.04-2014.08	6MT	Rear	Chassis Cabin RWD PHFA/PHFC		Propshaft	PS901673
	2006.04-2014.08		Centre	Chassis Cabin RWD PHFA/PHFC		Center Bearing Support	538648
	2006.04-2014.08		Centre	Van RWD PHFA/PHFC		Center Bearing Support	538648
	2006.04-2014.08		Centre	Bus RWD PHFA/PHFC		Center Bearing Support	538648
	2006.04-2014.08		Centre	Chassis Cabin RWD PHFA/PHFC		Center Bearing Support Kit	538691S
	2006.04-2014.08		Centre	Van RWD PHFA/PHFC		Center Bearing Support Kit	538691S
	2006.04-2014.08		Centre	Bus RWD PHFA/PHFC		Center Bearing Support Kit	538691S
	2006.04-2014.08		Front	Chassis Cabin RWD PHFA/PHFC	6MT	Flexible Coupling	533418
	2006.04-2014.08		Front	Van RWD PHFA/PHFC	6MT	Flexible Coupling	533418
	2006.04-2014.08		Front	Bus RWD PHFA/PHFC	6MT,Trans. code:MT82	Flexible Coupling	533418
	2006.04-2014.08		Front	Chassis Cabin RWD PHFA/PHFC	Trans. code:MT75,5MT	Flexible Coupling	533420
	2006.04-2014.08		Front	Van RWD PHFA/PHFC	Trans. code:MT75,5MT	Flexible Coupling	533420
	2006.04-2014.08		Front	Bus RWD PHFA/PHFC	Trans. code:MT75,5MT	Flexible Coupling	533420
2.4 (85 kw)	2006.04-2014.08	6MT	Rear	Bus RWD JXFA/JXFC		Propshaft	PS900616
	2006.04-2014.08	6MT	Rear	Chassis Cabin RWD JXFA/JXFC	for OE No.:2001258	Propshaft	PS900616
	2006.04-2014.08	6MT	Rear	Van RWD JXFA/JXFC		Propshaft	PS900616
	2006.04-2014.08	6MT	Rear	Chassis Cabin RWD JXFA/JXFC	for OE No.:CC114K357CC	Propshaft	PS901673
	2006.04-2014.08		Centre	Bus RWD JXFA/JXFC		Center Bearing Support	538648
	2006.04-2014.08		Centre	Chassis Cabin RWD JXFA/JXFC		Center Bearing Support	538648
	2006.04-2014.08		Centre	Van RWD JXFA/JXFC		Center Bearing Support	538648
	2006.04-2014.08		Centre	Bus RWD JXFA/JXFC		Center Bearing Support Kit	538691S
	2006.04-2014.08		Centre	Chassis Cabin RWD JXFA/JXFC		Center Bearing Support Kit	538691S
	2006.04-2014.08		Centre	Van RWD JXFA/JXFC		Center Bearing Support Kit	538691S
	2006.04-2014.08		Front	Bus RWD JXFA/JXFC		Flexible Coupling	533418
	2006.04-2014.08		Front	Chassis Cabin RWD JXFA/JXFC		Flexible Coupling	533418
	2006.04-2014.08		Front	Van RWD JXFA/JXFC		Flexible Coupling	533418
	2006.04-2014.08		Front	Bus RWD JXFA/JXFC		Flexible Coupling	533420
	2006.04-2014.08		Front	Chassis Cabin RWD JXFA/JXFC		Flexible Coupling	533420
	2006.04-2014.08		Front	Van RWD JXFA/JXFC		Flexible Coupling	533420
2.4 (88 kw)	2000.01-2006.05	5MT	Rear	Chassis Cabin RWD D4FA		Propshaft	PS900235
	2000.01-2006.05		Centre	Chassis Cabin RWD D4FA		Center Bearing Support	538648
	2000.01-2006.05		Front	Chassis Cabin RWD D4FA	6MT,Trans. code:MT82	Flexible Coupling	533418
	2000.01-2006.05		Front	Chassis Cabin RWD D4FA	Trans. code:MT75,5MT	Flexible Coupling	533420
2.4 (92 kw)	2001.07-2006.05	5MT	Rear	Chassis Cabin RWD DOFA		Propshaft	PS900235
	2001.07-2006.05		Centre	Chassis Cabin RWD DOFA		Center Bearing Support	538648
	2001.07-2006.05		Front	Chassis Cabin RWD DOFA	6MT,Trans. code:MT82	Flexible Coupling	533418
	2001.07-2006.05		Front	Chassis Cabin RWD DOFA	Trans. code:MT75,5MT	Flexible Coupling	533420
2.4 (101 kw)	2004.03-2006.05	6MT	Rear	Chassis Cabin RWD H9FA		Propshaft	PS900235
	2004.03-2006.05		Centre	Chassis Cabin RWD H9FA		Center Bearing Support	538648
	2004.03-2006.05		Front	Chassis Cabin RWD H9FA	6MT,Trans. code:MT82	Flexible Coupling	533418
	2004.03-2006.05		Front	Chassis Cabin RWD H9FA	Trans. code:MT75,5MT	Flexible Coupling	533420
2.4 (103 kw)	2006.04-2014.08		Centre	Van RWD H9FD		Center Bearing Support	538648
	2006.04-2014.08		Centre	Bus RWD H9FD		Center Bearing Support	538648
	2006.04-2014.08		Centre	Van RWD H9FD		Center Bearing Support Kit	538691S
	2006.04-2014.08		Centre	Bus RWD H9FD		Center Bearing Support Kit	538691S
	2006.04-2014.08		Front	Van RWD H9FD	6MT	Flexible Coupling	533418
	2006.04-2014.08		Front	Bus RWD H9FD	6MT,Trans. code:MT82	Flexible Coupling	533418
	2006.04-2014.08		Front	Van RWD H9FD	Trans. code:MT75,5MT	Flexible Coupling	533420
	2006.04-2014.08		Front	Bus RWD H9FD	Trans. code:MT75,5MT	Flexible Coupling	533420
3.2 (147 kw)	2008.02-2014.08	6MT	Rear	Chassis Cabin RWD SAFA/SAFB		Propshaft	PS901673
	2008.02-2014.08		Centre	Chassis Cabin RWD SAFA/SAFB		Center Bearing Support	538648
	2008.02-2014.08		Centre	Chassis Cabin RWD SAFA/SAFB		Center Bearing Support Kit	538691S
	2008.02-2014.08		Front	Chassis Cabin RWD SAFA/SAFB	6MT	Flexible Coupling	533418
	2008.02-2014.08		Front	Chassis Cabin RWD SAFA/SAFB	Trans. code:MT75,5MT	Flexible Coupling	533420
	2010.06-2014.08		Centre	Van RWD SAFA/SAFB		Center Bearing Support	538648
	2010.06-2014.08		Centre	Bus RWD SAFA/SAFB		Center Bearing Support	538648

	YEAR	TRANSM.	FITTING POSITION	BODY STYLE & DRIVE TYPE & ENGINE	REMARKS	PRODUCT	GSP Ref.
FORD							
Transit 430							
3.2 (147 kw)	2010.06-2014.08		Centre	Van RWD SAFA/SAFB		Center Bearing Support Kit	538691S
	2010.06-2014.08		Centre	Bus RWD SAFA/SAFB		Center Bearing Support Kit	538691S
	2010.06-2014.08		Front	Van RWD SAFA/SAFB	6MT	Flexible Coupling	533418
	2010.06-2014.08		Front	Bus RWD SAFA/SAFB	6MT,Trans. code:MT82	Flexible Coupling	533418
	2010.06-2014.08		Front	Van RWD SAFA/SAFB	Trans. code:MT75,5MT	Flexible Coupling	533420
	2010.06-2014.08		Front	Bus RWD SAFA/SAFB	Trans. code:MT75,5MT	Flexible Coupling	533420
Transit 460							
2.0 (96 kw)	2019.05-		Centre	Bus RWD BKHA/YMHA		Center Bearing Support	538648
	2019.05-		Front	Bus RWD BKHA/YMHA		Flexible Coupling	533418
2.0 (125 kw)	2019.05-		Centre	Bus RWD BLHA/YNHA		Center Bearing Support	538648
	2019.05-		Front	Bus RWD BLHA/YNHA		Flexible Coupling	533418
2.2 (92 kw)	2011.09-2014.12	6MT	Rear	Van RWD CYRA		Propshaft	PS900617
	2011.09-2014.12		Centre	Van RWD CYRA		Center Bearing Support	538648
	2011.09-2014.12		Front	Van RWD CYRA		Flexible Coupling	533418
	2011.09-2014.12		Front	Van RWD CYRA		Flexible Coupling	533420
	2011.10-2014.08	6MT	Rear	Chassis Cabin RWD CYRA	for OE No.:CC114K357FD	Propshaft	PS900617
	2011.10-2014.08	6MT	Rear	Chassis Cabin RWD CYRA	Date from:2013.01,Model:Transit 330;for OE No.:CC11-4K357-CC	Propshaft	PS901673
	2011.10-2014.08		Front	Chassis Cabin RWD CYRA		Flexible Coupling	533418
	2011.10-2014.08		Front	Chassis Cabin RWD CYRA		Flexible Coupling	533420
	2013.08-2018.12	6MT	Rear	Bus RWD USR6		Propshaft	PS900615
	2013.08-2018.12		Centre	Bus RWD USR6		Center Bearing Support	538648
	2013.08-2018.12		Front	Bus RWD USR6		Flexible Coupling	533418
2.2 (99 kw)	2013.08-2018.12		Centre	Bus RWD UHR5		Center Bearing Support	538648
	2013.08-2018.12		Front	Bus RWD UHR5		Flexible Coupling	533418
2.2 (100 kw)	2011.09-2014.08		Centre	Bus RWD USRA/USRB		Center Bearing Support	538648
	2011.09-2014.08		Centre	Bus RWD USRA/USRB		Center Bearing Support Kit	538691S
	2011.09-2014.08		Front	Bus RWD USRA/USRB	6MT	Flexible Coupling	533418
	2011.09-2014.08		Front	Bus RWD USRA/USRB	Trans. code:MT75,5MT	Flexible Coupling	533420
	2011.10-2014.08		Centre	Van RWD USRA/USRB		Center Bearing Support	538648
	2011.10-2014.08		Centre	Van RWD USRA/USRB		Center Bearing Support Kit	538691S
	2011.10-2014.08		Front	Van RWD USRA/USRB	6MT	Flexible Coupling	533418
	2011.10-2014.08		Front	Van RWD USRA/USRB	For OE No.4393343	Flexible Coupling	533420
2.2 (114 kw)	2011.10-2014.08	6MT	Rear	Chassis Cabin RWD CVRA/CVRB/CVRC	Model:Transit 460;Date from:2013.01	Propshaft	PS901673
	2011.10-2014.08		Centre	Van RWD CVRA/CVRB/CVRC		Center Bearing Support	538648
	2011.10-2014.08		Front	Chassis Cabin RWD CVRA/CVRB/CVRC	6MT	Flexible Coupling	533418
	2011.10-2014.08		Front	Van RWD CVRA/CVRB/CVRC	6MT	Flexible Coupling	533418
	2011.10-2014.08		Front	Chassis Cabin RWD CVRA/CVRB/CVRC	Trans. code:MT75,5MT	Flexible Coupling	533420
	2011.10-2014.08		Front	Van RWD CVRA/CVRB/CVRC	Trans. code:MT75,5MT	Flexible Coupling	533420
	2013.08-		Centre	Bus RWD CV24/CVR5/UYR6		Center Bearing Support	538648
	2013.08-		Front	Bus RWD CV24/CVR5/UYR6	6MT	Flexible Coupling	533418
2.4 (85 kw)	2006.04-2014.08	6MT	Rear	Van RWD JXFA/JXFC		Propshaft	PS900616
	2006.04-2014.08		Centre	Van RWD JXFA/JXFC		Center Bearing Support	538648
	2006.04-2014.08		Centre	Van RWD JXFA/JXFC		Center Bearing Support Kit	538691S
	2006.04-2014.08		Front	Van RWD JXFA/JXFC		Flexible Coupling	533418
	2006.04-2014.08		Front	Van RWD JXFA/JXFC		Flexible Coupling	533420
2.4 (103 kw)	2006.04-2014.08	6MT	Rear	Chassis Cabin RWD H9FD		Propshaft	PS901673
	2006.04-2014.08		Centre	Chassis Cabin RWD H9FD		Center Bearing Support	538648
	2006.04-2014.08		Centre	Van RWD H9FD		Center Bearing Support	538648
	2006.04-2014.08		Centre	Chassis Cabin RWD H9FD		Center Bearing Support Kit	538691S
	2006.04-2014.08		Centre	Van RWD H9FD		Center Bearing Support Kit	538691S
	2006.04-2014.08		Front	Chassis Cabin RWD H9FD	6MT	Flexible Coupling	533418
	2006.04-2014.08		Front	Van RWD H9FD	6MT	Flexible Coupling	533418
	2006.04-2014.08		Front	Chassis Cabin RWD H9FD	Trans. code:MT75,5MT	Flexible Coupling	533420
	2006.04-2014.08		Front	Van RWD H9FD	Trans. code:MT75,5MT	Flexible Coupling	533420
3.2 (147 kw)	2007.09-2014.08	6MT	Rear	Chassis Cabin RWD SAFA/SAFB		Propshaft	PS901673
	2007.09-2014.08		Centre	Chassis Cabin RWD SAFA/SAFB		Center Bearing Support	538648
	2007.09-2014.08		Centre	Van RWD SAFA/SAFB		Center Bearing Support	538648
	2007.09-2014.08		Centre	Chassis Cabin RWD SAFA/SAFB		Center Bearing Support Kit	538691S
	2007.09-2014.08		Centre	Van RWD SAFA/SAFB		Center Bearing Support Kit	538691S
	2007.09-2014.08		Front	Chassis Cabin RWD SAFA/SAFB	6MT	Flexible Coupling	533418
	2007.09-2014.08		Front	Van RWD SAFA/SAFB	6MT	Flexible Coupling	533418
	2007.09-2014.08		Front	Chassis Cabin RWD SAFA/SAFB	Trans. code:MT75,5MT	Flexible Coupling	533420
	2007.09-2014.08		Front	Van RWD SAFA/SAFB	Trans. code:MT75,5MT	Flexible Coupling	533420

	YEAR	TRANSM.	FITTING POSITION	BODY STYLE & DRIVE TYPE & ENGINE	REMARKS	PRODUCT	GSP Ref.
FORD							
Transit 470							
2.0 (96 kw)	2019.05-	6MT	Rear	Chassis Cabin RWD YMHA		Propshaft	PS900615
	2019.05-	6MT	Rear	Van RWD YMHA		Propshaft	PS900615
	2019.05-		Centre	Chassis Cabin RWD YMHA		Center Bearing Support	538648
	2019.05-		Centre	Van RWD YMHA		Center Bearing Support	538648
	2019.05-		Front	Chassis Cabin RWD YMHA		Flexible Coupling	533418
	2019.05-		Front	Van RWD YMHA		Flexible Coupling	533418
2.0 (125 kw)	2016.03-		Centre	Chassis Cabin RWD BLHA/YNR6		Center Bearing Support	538648
	2016.03-		Centre	Van RWD BLHA/YNR6		Center Bearing Support	538648
	2016.03-		Front	Chassis Cabin RWD BLHA/YNR6		Flexible Coupling	533418
	2016.03-		Front	Van RWD BLHA/YNR6		Flexible Coupling	533418
	2016.03-2019.12		Centre	Chassis Cabin 4WD YNR6		Center Bearing Support	538648
	2016.03-2019.12		Centre	Van 4WD YNR6		Center Bearing Support	538648
	2016.03-2019.12		Front	Chassis Cabin 4WD YNR6		Flexible Coupling	533418
	2016.03-2019.12		Front	Van 4WD YNR6		Flexible Coupling	533418
2.2 (92 kw)	2013.08-2018.12	6MT	Rear	Chassis Cabin RWD CYR5/USR6		Propshaft	PS900615
	2013.08-2018.12	6MT	Rear	Van RWD CYR5/USR6		Propshaft	PS900615
	2013.08-2018.12		Centre	Chassis Cabin RWD CYR5/USR6		Center Bearing Support	538648
	2013.08-2018.12		Centre	Van RWD CYR5/USR6		Center Bearing Support	538648
	2013.08-2018.12		Front	Chassis Cabin RWD CYR5/USR6	Inner diameter:64.5mm	Flexible Coupling	533418
	2013.08-2018.12		Front	Van RWD CYR5/USR6		Flexible Coupling	533418
	2013.08-2018.12		Front	Chassis Cabin RWD CYR5/USR6	Inner diameter:56mm	Flexible Coupling	533420
2.2 (114 kw)	2013.08-2018.12		Centre	Chassis Cabin RWD CV24/CVR5/UYR6		Center Bearing Support	538648
	2013.08-2018.12		Centre	Van RWD CV24/CVR5/UYR6		Center Bearing Support	538648
	2013.08-2018.12		Front	Chassis Cabin RWD CV24/CVR5/UYR6	Inner diameter:64.5mm	Flexible Coupling	533418
	2013.08-2018.12		Front	Van RWD CV24/CVR5/UYR6		Flexible Coupling	533418
	2013.08-2018.12		Front	Chassis Cabin RWD CV24/CVR5/UYR6	Inner diameter:56mm	Flexible Coupling	533420
Transit 80							
1.6 (48 kw)	1977.12-1986.10	MT	Rear	Bus RWD 4RB (12.77-04.81)		Propshaft	PS900234
2.0 (84 kw)	1994.06-2000.03		Centre	Van RWD NSF, NSG, NSH	Inner diameter:35mm	Center Bearing Support	538648
	1994.06-2000.03		Centre	Van RWD NSF, NSG, NSH	Inner diameter:45mm	Center Bearing Support	539038
2.5 (51 kw)	1991.08-1994.07	MT	Rear	Bus RWD 4BC, 4CC, 4FA		Propshaft	PS900234
	1994.06-2000.03		Centre	Van RWD 4FA, 4FB, 4FC, 4FD		Center Bearing Support	538648
	1994.06-2000.03		Centre	Van RWD 4FA, 4FB, 4FC, 4FD		Center Bearing Support	539038
2.5 (55 kw)	1994.06-2000.03		Centre	Van RWD 4HA, 4HD	Inner diameter:35mm	Center Bearing Support	538648
	1994.06-2000.03		Centre	Van RWD 4HA, 4HD	Inner diameter:45mm	Center Bearing Support	539038
2.5 (56 kw)	1994.06-2000.03		Centre	Van RWD 4HB, 4HC		Center Bearing Support	538648
	1994.06-2000.03		Centre	Van RWD 4HB, 4HC		Center Bearing Support	539038
2.5 (63 kw)	1994.06-2000.03		Centre	Van RWD 4GA, 4GB, 4GC, 4GD, 4GE, 4GF	Inner diameter:35mm	Center Bearing Support	538648
	1994.06-2000.03		Centre	Van RWD 4GA, 4GB, 4GC, 4GD, 4GE, 4GF	Inner diameter:45mm	Center Bearing Support	539038
Transit Connect							
2.0 (90 kw)	2024.05-		Front	MPV Van 4WD ENK6(DTRC)		Flexible Coupling	537626
	2024.05-		Rear	MPV Van 4WD ENK6(DTRC)		Flexible Coupling	533882
	2024.05-		Front	MPV Van 4WD ENK6(DTRC)		Flexible Coupling Kit	537626S
	2024.05-		Rear	MPV Van 4WD ENK6(DTRC)		Flexible Coupling Kit	533882S
Transit Custom 250							
2.2 (74 kw)	2012.09-2015.12		Centre	Van FWD DRFF/DRFG		Center Bearing Support	538648
Transit Custom 270							
2.2 (74 kw)	2012.09-2015.12		Centre	Van FWD DRF4/DRFF/DRFG		Center Bearing Support	538648
2.2 (92 kw)	2012.09-2016.04		Centre	Van FWD CYF4/CYFF		Center Bearing Support	538648
2.2 (114 kw)	2012.09-2015.12		Centre	Van FWD CVFF		Center Bearing Support	538648
Transit Custom 290							
2.2 (74 kw)	2012.09-2015.12		Centre	Van FWD DRF4/DRFF/DRFG		Center Bearing Support	538648
2.2 (92 kw)	2012.09-2016.04		Centre	Van FWD CYF4/CYFF		Center Bearing Support	538648
2.2 (114 kw)	2012.09-2015.12		Centre	Van FWD CVFF		Center Bearing Support	538648
Transit Custom 300							
2.2 (74 kw)	2012.09-2015.12		Centre	Bus FWD DRF4/DRFF/DRFG		Center Bearing Support	538648
2.2 (92 kw)	2012.09-2015.12		Centre	Bus FWD CYF4/CYFF		Center Bearing Support	538648
Transit Custom 310							
2.2 (74 kw)	2012.09-2015.12		Centre	Van FWD DRF4/DRFF/DRFG		Center Bearing Support	538648
	2012.09-2015.12		Centre	Bus FWD DRF4/DRFF/DRFG		Center Bearing Support	538648
2.2 (92 kw)	2012.09-2015.12		Centre	Bus FWD CYF4/CYFF		Center Bearing Support	538648
	2012.09-2016.04		Centre	Van FWD CYF4/CYFF		Center Bearing Support	538648
2.2 (114 kw)	2012.09-2015.12		Centre	Van FWD CVFF		Center Bearing Support	538648

	YEAR	TRANSM.	FITTING POSITION	BODY STYLE & DRIVE TYPE & ENGINE	REMARKS	PRODUCT	GSP Ref.
FORD							
Transit Custom 330							
2.2 (92 kw)	2012.09-2015.12		Centre	Bus FWD CYF4/CYFF		Center Bearing Support	538648
	2012.09-2016.04		Centre	Van FWD CYF4/CYFF		Center Bearing Support	538648
2.2 (114 kw)	2012.09-2015.12		Centre	Van FWD CVFF		Center Bearing Support	538648
Transit Tourneo							
2.0 (84 kw)	1994.11-2000.12		Centre	Bus RWD NSF, NSG, NSH		Center Bearing Support	538648
2.2 (85 kw)	2008.10-2014.08		Centre	Bus FWD SRFA/SRFB/SRFC/SRFD/SRFE		Center Bearing Support	538648
2.2 (103 kw)	2007.09-2014.08		Centre	Bus FWD PGFA/PGFB/UHFA/UHFB/UHFC		Center Bearing Support	538648
2.4 (55 kw)	1994.08-2000.06		Centre	Bus RWD 4HA		Center Bearing Support	538648
	1994.08-2000.06		Front	Bus RWD 4HA		Flexible Coupling	533420
2.5 (51 kw)	1994.11-2000.12		Centre	Bus RWD 4FA, 4FB, 4FC, 4FD		Center Bearing Support	538648
	1994.11-2000.12		Centre	Bus RWD 4FA, 4FB, 4FC, 4FD		Center Bearing Support	539038
	1994.11-2000.12		Front	Bus RWD 4FA, 4FB, 4FC, 4FD		Flexible Coupling	533420
2.5 (56 kw)	1994.11-2000.12		Centre	Bus RWD 4HB, 4HC		Center Bearing Support	538648
	1994.11-2000.12		Centre	Bus RWD 4HB, 4HC		Center Bearing Support	539038
	1994.11-2000.12		Front	Bus RWD 4HB, 4HC		Flexible Coupling	533420
2.5 (63 kw)	1994.11-2000.12		Centre	Bus RWD 4GA, 4GB, 4GC, 4GD		Center Bearing Support	538648
	1994.11-2000.12		Front	Bus RWD 4GA, 4GB, 4GC, 4GD		Flexible Coupling	533420
2.5 (74 kw)	1998.04-2000.12		Centre	Bus RWD 4EB, 4EC		Center Bearing Support	538648
	1998.04-2000.12		Front	Bus RWD 4EB, 4EC		Flexible Coupling	533420
FORD ASIA & OCEANIA							
Ranger							
2.2 (88 kw)	2014.01-2022.05		Rear	Pickup RWD GBVAJPF		Propshaft	PS901341
2.2 (110 kw)	2011.11-2015.06		Rear	Pickup RWD P4-AT		Propshaft	PS901341
FORD AUSTRALIA							
F-150 Pickup							
4.2 (157 kw)	2003.10-2007.09	AT	Rear	Pickup RWD 992		Propshaft	PS901516
Falcon							
4.0 (195 kw)	2008.02-2014.12	6AT	Rear	Pickup RWD BARRA 195		Propshaft	PS900580
	2008.02-2014.12	6AT	-	Pickup RWD BARRA 195		Joint,propshaft	601681
FORD USA							
Edge							
2.0 (179 kw)	2011.09-2014.12	6AT	Rear	SUV 4WD T20HDTX	Model year to:2014	Propshaft	PS900224
2.0 (186 kw)	2015.01-	AT	Rear	SUV 4WD C20HDTX	Date to:2016.08	Propshaft	PS900223
3.5 (198 kw)	2006.08-2014.12	6AT	Rear	SUV 4WD T35PDED	Model year from:2009,Model year to:2014	Propshaft	PS900224
	2006.08-2014.12	6AT	Rear	SUV 4WD T35PDED	Model year from:2007,Model year to:2008	Propshaft	PS900236
3.5 (208 kw)	2014.09-	AT	Rear	SUV 4WD C35PDED	Model year from:2015,Model year to:2016	Propshaft	PS901443
3.5 (209 kw)	2014.09-	AT	Rear	SUV 4WD C35PDED	Model year from:2015,Model year to:2016	Propshaft	PS901443
3.5 (213 kw)	2010.01-2015.12	6AT	Rear	SUV 4WD T35PDED	Model year to:2014	Propshaft	PS900224
3.7 (227 kw)	2010.09-2014.12	6AT	Rear	SUV 4WD T37PDED		Propshaft	PS900224
Escape							
2.0 (179 kw)	2013.03-		Centre	SUV 4WD TPWA		Center Bearing Support	539913
2.3 (114 kw)	2001.10-2004.12		-	SUV FWD ZH23HYU		Joint,propshaft	635047
Expedition							
3.5 (272 kw)	2014.07-	6AT	Front	SUV 4WD T35PDTD	Model year from:2015,Model year to:2017	Propshaft	PS900239
3.5 (287 kw)	2015.01-	6AT	Front	SUV 4WD T35PDTD	Model year to:2017	Propshaft	PS900239
5.4 (172 kw)	1996.09-1998.12	MT	Front	SUV 4WD T54MSEM	Model year from:1997	Propshaft	PS900237
5.4 (194 kw)	1996.08-2002.09	MT	Front	SUV 4WD C54MSEM	Model year from:1997,Model year to:2001	Propshaft	PS900237
	1996.08-2002.09	AT	Rear	SUV 4WD C54MSEM	Model year from:1999	Propshaft	PS901688
5.4 (224 kw)	2006.09-	6AT	Front	SUV 4WD 995	Model year to:2008	Propshaft	299302
	2006.09-		Front	SUV RWD 995		Joint,propshaft	801331
	2006.09-		Front	SUV 4WD 995		Joint,propshaft	801331
5.4 (231 kw)	2009.01-		Front	SUV RWD T54USEM		Joint,propshaft	801331
	2009.09-		Front	SUV RWD 995		Joint,propshaft	801331
	2010.01-	6AT	Front	SUV 4WD T54RSEM	Model year to:2014	Propshaft	299302
	2010.01-		Front	SUV 4WD T54RSEM		Joint,propshaft	801331
Explorer							
2.3 (201 kw)	2015.05-	6AT	Rear	SUV 4WD T23HD0D	Model year from:2016,Model year to:2019	Propshaft	PS901690
3.5 (183 kw)	2014.01-	6AT	Rear	SUV 4WD C35PDED	Model year from:2016,Model year to:2019	Propshaft	PS900240
3.5 (214 kw)	2013.03-	AT	Rear	SUV 4WD C35PDED	Model year from:2016,Model year to:2019	Propshaft	PS900240
3.5 (216 kw)	2011.01-	6AT	Rear	SUV 4WD C35PDED	Model year from:2016,Model year to:2019	Propshaft	PS900240
3.5 (254 kw)	2014.01-	6AT	Rear	SUV 4WD T35PDTD	Model year from:2016,Model year to:2019	Propshaft	PS900240
3.5 (262 kw)	2015.10-	AT	Rear	SUV 4WD T35PDTD	Model year from:2016,Model year to:2019	Propshaft	PS900240
3.5 (272 kw)	2012.01-	6AT	Rear	SUV 4WD T35PDTD	Model year from:2016,Model year to:2019	Propshaft	PS900240

	YEAR	TRANSM.	FITTING POSITION	BODY STYLE & DRIVE TYPE & ENGINE	REMARKS	PRODUCT	GSP Ref.
FORD USA							
Explorer							
4.0 (115 kw)	1995.03-2001.12	MT	Front	SUV 4WD V99X	Model year from:1997	Propshaft	PS900577
	1995.03-2001.12	MT	Front	SUV 4WD V99X	Model year to:1997	Propshaft	PS901512
4.0 (119 kw)	1994.11-2001.12	AT	Front	SUV 4WD 99X	Model year from:1997,Model year to:2001	Propshaft	PS900577
	1994.11-2001.12	AT	Front	SUV 4WD 99X	Model year to:1997	Propshaft	PS901512
4.0 (150 kw)	1997.01-2002.08	AT	Front	SUV 4WD 99XS		Propshaft	PS900577
	1999.10-2002.08	AT	Front	SUV 4WD 99EA		Propshaft	PS900577
4.0 (152 kw)	1996.10-2001.12		Front	SUV 4WD 99XS	Model year from:1997	Propshaft	PS900577
4.0 (156 kw)	2002.01-	AT	Front	SUV 4WD 99EA	Model year to:2005	Propshaft	PS900576
4.0 (157 kw)	1997.01-2002.12		Front	SUV 4WD 99EA		Propshaft	PS900577
	2001.09-	AT	Front	SUV 4WD 99EA	Model year from:2002,Model year to:2006	Propshaft	PS900576
	2001.09-		Front	SUV 4WD 99EA		Joint,propshaft	661100
	2006.01-2011.05	AT	Front	SUV 4WD 99EA		Propshaft	201972
	2006.01-2011.05		Front	SUV 4WD 99EA		Joint,propshaft	601570
	2006.05-2011.05		Front	SUV RWD 99EA		Joint,propshaft	601570
4.6 (178 kw)	2001.11-2006.04	AT	Front	SUV 4WD 99WA		Propshaft	PS900576
4.6 (218 kw)	2006.05-2011.05	AT	Front	SUV 4WD 998A		Propshaft	201972
	2006.05-2011.05		Front	SUV RWD 998A		Joint,propshaft	601570
	2006.05-2011.05		Front	SUV 4WD 998A		Joint,propshaft	601570
4.9 (160 kw)	1997.09-2001.12	AT	Front	SUV 4WD 99E		Propshaft	PS900245
Explorer Sport Trac							
4.0 (157 kw)	2006.06-2011.05		-	Pickup RWD 99EA		Center Bearing Support	539040
	2006.09-2010.12	AT	Front	Pickup 4WD 99EA		Propshaft	201972
	2006.09-2010.12		Front	Pickup 4WD 99EA		Joint,propshaft	601570
	2006.09-2010.12		-	Pickup 4WD 99EA		Center Bearing Support	539040
4.6 (218 kw)	2006.06-2011.05	AT	Front	Pickup 4WD 998A		Propshaft	201972
	2006.06-2011.05	AT	Rear	Pickup 4WD 998A		Propshaft	PS901513
	2006.06-2011.05		Front	Pickup 4WD 998A		Joint,propshaft	601570
F-150							
4.2 (157 kw)	2003.10-2007.09	AT	Rear	Pickup RWD 992		Propshaft	PS901516
4.6 (170 kw)	2003.10-2007.09	AT	Rear	Pickup 4WD 99W	For OE No.:5L3Z-4602-KA	Propshaft	PS901514
	2003.10-2007.09	AT	Rear	Pickup 4WD 99W	For OE No.:5L3Z4-602-JA	Propshaft	PS901515
	2003.10-2007.09	AT	Rear	Pickup RWD 99W		Propshaft	PS901516
4.6 (248 kw)	2003.10-2007.09	AT	Rear	Pickup 4WD 999	For OE No.:5L3Z-4602-KA	Propshaft	PS901514
	2003.10-2007.09	AT	Rear	Pickup 4WD 999	For OE No.:5L3Z4-602-JA	Propshaft	PS901515
5.4 (194 kw)	2004.02-2007.09	AT	Rear	Pickup 4WD 99L4		Propshaft	PS901514
6.2 (306 kw)	2010.01-	AT	Front	Pickup 4WD C62RSEM	Model year to:2014	Propshaft	299302
F-150 Crew Cab Pickup							
3.5 (272 kw)	2010.09-	6AT	Front	Pickup 4WD T35PDTD	Model year to:2014	Propshaft	PS900239
3.7 (225 kw)	2010.09-	6AT	Front	Pickup 4WD 99M	Model year to:2014	Propshaft	PS900239
	2013.09-	6AT	Front	Pickup 4WD 99M	For Model year:2014	Propshaft	PS900239
5.0 (268 kw)	2010.09-	AT	Front	Pickup 4WD 99F	Model year to:2014	Propshaft	299302
5.4 (190 kw)	2000.09-2003.12	MT	Front	Pickup 4WD 99L4	Model year from:1998,Model year to:2002	Propshaft	PS900237
	2000.09-2003.12	MT	Front	Pickup 4WD 99L4	Model year to:2002	Propshaft	PS900237
5.4 (231 kw)	2008.09-2010.12	AT	Front	Pickup 4WD 99L		Propshaft	299302
F-150 Extended Cab							
3.7 (225 kw)	2010.09-	6AT	Front	Pickup 4WD 99M	Model year to:2014	Propshaft	PS900239
	2013.09-	6AT	Front	Pickup 4WD 99M	For Model year:2014	Propshaft	PS900239
5.4 (231 kw)	2008.09-2010.12	6AT	Front	Pickup 4WD 99L		Propshaft	299302
F-150 Extended Cab Pickup							
3.5 (272 kw)	2010.09-	6AT	Front	Pickup 4WD T35PDTD	Model year to:2014	Propshaft	PS900239
3.7 (225 kw)	2013.09-	6AT	Front	Pickup 4WD 99M	For Model year:2014	Propshaft	PS900239
5.4 (190 kw)	1998.09-2003.02	MT	Front	Pickup 4WD 99L4	Model year to:2002	Propshaft	PS900237
	1998.09-2003.12	MT	Front	Pickup 4WD 99L4	Model year from:1998,Model year to:2002	Propshaft	PS900237
	1999.09-2003.12	MT	Front	Pickup 4WD 99L4	Model year from:1998,Model year to:2002	Propshaft	PS900237
F-150 Standard Cab Pickup							
3.5 (272 kw)	2010.09-	6AT	Front	Pickup 4WD T35PDTD	Model year to:2014	Propshaft	PS900239
3.7 (225 kw)	2010.09-	6AT	Front	Pickup 4WD 99M	Model year to:2014	Propshaft	PS900239
	2013.09-	6AT	Front	Pickup 4WD 99M	For Model year:2014	Propshaft	PS900239
5.0 (268 kw)	2010.09-	6AT	Front	Pickup 4WD 99F	Model year to:2014	Propshaft	299302
5.4 (190 kw)	1998.09-2003.12	MT	Front	Pickup 4WD 99L4	Model year to:2002	Propshaft	PS900237
5.4 (224 kw)	2005.09-2008.12	AT	Rear	Pickup 4WD 99L		Propshaft	PS901514
F-250 Super Duty Crew Cab Pickup							
5.4 (194 kw)	1998.09-2004.12	AT	Front	Pickup 4WD 99L4	Model year from:1999	Propshaft	PS900230
	1998.09-2004.12	MT	Front	Pickup 4WD 99L4	For Model year:1999	Propshaft	PS900237

	YEAR	TRANSM.	FITTING POSITION	BODY STYLE & DRIVE TYPE & ENGINE	REMARKS	PRODUCT	GSP Ref.
FORD USA							
F-250 Super Duty Crew Cab Pickup							
6.8 (231 kw)	1998.09-2004.12	AT	Front	Pickup 4WD 99S1	Model year from:1999	Propshaft	PS900230
F-250 Super Duty Extended Cab Pickup							
5.4 (194 kw)	1998.09-2004.12	MT	Front	Pickup 4WD 99L4	For Model year:1999	Propshaft	PS900237
F-250 Super Duty Standard Cab Pickup							
5.4 (194 kw)	1998.09-2004.12	MT	Front	Pickup 4WD 99L4	For Model year:1999	Propshaft	PS900237
6.4 (261 kw)	2007.09-2010.12	AT	Front	Pickup 4WD 6.4HU2U, 6.4HU2Y, T64DV0I		Propshaft	PS901442
6.8 (231 kw)	1998.09-2004.12	AT	Front	Pickup 4WD 99S1	Model year from:1999	Propshaft	PS900230
7.3 (205 kw)	1998.09-2003.12	AT	Front	Pickup 4WD K	Model year from:1999,Model year to:2001	Propshaft	PS900229
F-350 Super Duty							
6.2 (287 kw)	2010.09-	AT	Front	Platform/Chassis 4WD T62RSEM		Propshaft	PS901381
	2010.09-	AT	Front	Pickup 4WD T62RSEM		Propshaft	PS901381
6.4 (261 kw)	2010.01-2010.05	AT	Front	Pickup 4WD HU2Y		Propshaft	PS901442
6.8 (270 kw)	2007.09-2010.12	AT	Front	Platform/Chassis 4WD T68USEM		Propshaft	PS900230
F-350 Super Duty Cab & Chassis							
5.4 (224 kw)	2007.09-2010.12	AT	Front	Platform/Chassis 4WD		Propshaft	PS900230
F-350 Super Duty Crew Cab Pickup							
5.4 (194 kw)	1998.09-2004.12	AT	Front	Pickup 4WD 99L4	Model year from:1999	Propshaft	PS900230
6.7 (298 kw)	2012.09-	AT	Front	Pickup 4WD T67DVTX		Propshaft	PS901381
F-350 Super Duty Extended Cab							
6.4 (261 kw)	2007.09-2010.12	AT	Front	Pickup 4WD 6.4HU2U/6.4HU2Y		Propshaft	PS901442
6.8 (270 kw)	2007.09-2010.12	AT	Front	Pickup 4WD C68USEM		Propshaft	PS900230
F-350 Super Duty Standard Cab Pickup							
5.4 (224 kw)	2007.09-2010.12	AT	Front	Pickup 4WD 54USEM		Propshaft	PS900230
6.4 (261 kw)	2007.09-2010.12	AT	Front	Pickup 4WD 6.4HU2U/6.4HU2Y		Propshaft	PS901442
6.8 (270 kw)	2007.09-2010.12	AT	Front	Pickup 4WD T68USEM		Propshaft	PS900230
7.3 (205 kw)	2000.09-2002.12	AT	Front	Pickup 4WD K	Model year to:2001	Propshaft	PS900229
Five Hundred							
3.0 (151 kw)	2004.08-2007.04	CVT	Rear	Saloon 4WD 99SA	Model year from:2005,Model year to:2007	Propshaft	PS900244
Flex							
3.5 (265 kw)	2010.01-2012.12	6AT	Rear	SUV 4WD T35PDTD		Propshaft	PS901517
Freestyle							
3.0 (151 kw)	2004.09-2007.12	AT	Rear	Estate 4WD C30PDED	Model year from:2005	Propshaft	PS900244
Fusion							
2.3 (119 kw)	2006.09-2009.12	AT	Rear	Saloon 4WD C23HDEX	Model year from:2007	Propshaft	PS900241
2.5 (130 kw)	2009.09-2012.12	AT	Rear	Saloon 4WD C25HDEX	Model year from:2010	Propshaft	PS900241
3.0 (165 kw)	2006.09-2009.12	AT	Rear	Saloon 4WD C30PDED	Model year from:2007	Propshaft	PS900241
3.0 (179 kw)	2009.09-2012.12	AT	Rear	Saloon 4WD 99G	Model year from:2010	Propshaft	PS900241
Mustang							
4.6 (224 kw)	2004.12-		-	Coupe RWD C46USEM		Joint,propshaft	699240
5.4 (355 kw)	2006.01-		Front	Coupe RWD	Model year from:2007,Model year to:2011	Joint,propshaft	699240
	2006.01-		Rear	Coupe RWD	Model year from:2007,Model year to:2011	Joint,propshaft	835056
Ranger							
2.0 (157 kw)	2018.09-		Centre	Pickup 4WD T20DD0J		Center Bearing Support Kit	538696S
2.2 (88 kw)	2011.04-	6AT	Rear	Pickup RWD GBVAJPF		Propshaft	PS901343
	2011.04-	MT	Rear	Pickup RWD GBVAJPF		Propshaft	PS901341
2.2 (92 kw)	2011.04-	6MT	Front	Pickup 4WD GBVAJQW		Propshaft	PS901357
	2011.04-	6AT	Rear	Pickup RWD GBVAJQW		Propshaft	PS901343
	2011.04-	MT	Rear	Pickup RWD GBVAJQW		Propshaft	PS901341
2.2 (96 kw)	2015.05-	6MT	Front	Pickup 4WD T22DD0P		Propshaft	PS901357
	2015.05-	MT	Rear	Pickup RWD T22DD0P		Propshaft	PS901341
2.2 (110 kw)	2011.04-	MT	Front	Pickup 4WD GBVAJQJ		Propshaft	PS901357
	2011.11-	6AT	Rear	Pickup RWD GBVAJQJ		Propshaft	PS901343
	2011.11-	MT	Rear	Pickup RWD GBVAJQJ		Propshaft	PS901341
2.2 (118 kw)	2015.05-	MT	Front	Pickup 4WD GBVAJQJ/T22DD0P		Propshaft	PS901357
	2015.05-		Rear	Pickup RWD T22DD0P		Propshaft	PS901341
2.3 (107 kw)	2001.01-2012.12		Front	Pickup RWD T23HDEX		Joint,propshaft	661100
2.3 (114 kw)	2001.10-2005.09		Front	Pickup 4WD ZH23HYU	Model year to:2004	Propshaft	PS900577
2.5 (62 kw)	1998.06-2006.06		Centre	Pickup 4WD WLT		Center Bearing Support Kit	538696S
2.5 (80 kw)	1998.10-2006.06		Centre	Pickup 4WD WLT		Center Bearing Support Kit	538696S
2.5 (105 kw)	2005.06-2011.12		Rear	Pickup 4WD WLAA		Propshaft	PS900583
	2005.06-2011.12		Centre	Pickup 4WD WLAA		Center Bearing Support Kit	538696S
3.0 (109 kw)	2005.10-2006.06		Front	Pickup 4WD 99U30		Propshaft	PS900577
3.0 (110 kw)	2001.09-2002.12		Front	Pickup 4WD V99U		Propshaft	PS900577

	YEAR	TRANSM.	FITTING POSITION	BODY STYLE & DRIVE TYPE & ENGINE	REMARKS	PRODUCT	GSP Ref.
FORD USA							
Ranger							
3.2 (147 kw)	2011.04-	MT	Front	Pickup 4WD SA2R/SA2S/SA2W/SAFA		Propshaft	PS901357
	2011.04-	6AT	Rear	Pickup 4WD SA2R/SA2S/SA2W/SAFA		Propshaft	PS901342
	2011.11-	6AT	Rear	Pickup RWD SAFA		Propshaft	PS901343
4.0 (114 kw)	1989.04-1998.02		Front	Pickup 4WD V99X	Model year from:1993,Model year to:1997	Propshaft	PS901512
4.0 (152 kw)	2005.10-2010.09		Front	Pickup 4WD C40VSEX		Joint,propshaft	661100
Ranger Extended Cab Pickup							
2.3 (107 kw)	2002.09-2011.12		Front	Pickup 4WD T23HDEX	Model year to:2004	Propshaft	PS900577
	2002.09-2011.12		Front	Pickup 4WD T23HDEX		Joint,propshaft	661100
2.5 (89 kw)	1999.09-2001.12		Front	Pickup 4WD		Joint,propshaft	661100
4.0 (119 kw)	1997.09-2000.12		Front	Pickup 4WD		Joint,propshaft	661100
Ranger Standard Cab Pickup							
2.3 (107 kw)	2002.09-2012.12		Front	Pickup 4WD T23HDEX	Model year to:2004	Propshaft	PS900577
	2002.09-2012.12		Front	Pickup 4WD T23HDEX		Joint,propshaft	661100
2.5 (87 kw)	1997.09-1999.12		Front	Pickup 4WD C25		Joint,propshaft	661100
3.0 (108 kw)	1997.09-1999.12		Front	Pickup 4WD T30VVEX		Joint,propshaft	661100
4.0 (154 kw)	2000.09-2011.12		Front	Pickup 4WD		Propshaft	PS900577
	2000.09-2011.12		Front	Pickup 4WD		Joint,propshaft	661100
Taurus							
3.5 (200 kw)	2017.09-	AT	Rear	Saloon 4WD C35PDED	Model year to:2019	Propshaft	PS900240
3.5 (215 kw)	2012.09-	AT	Rear	Saloon 4WD C35PDED	Model year from:2015,Model year to:2019	Propshaft	PS900240
3.5 (272 kw)	2010.01-	6AT	Rear	Saloon 4WD C35PDTD	Model year from:2015,Model year to:2019	Propshaft	PS900240
GEELY							
Boyue							
1.8 (135 kw)	2016.03-	6AMT	Rear	SUV 4WD JLE4G18TDB	Model year to:2018	Propshaft	PS901818
GMC							
Acadia							
3.6 (205 kw)	2006.09-2008.12	6AT	Rear	SUV 4WD LY7		Propshaft	PS900173
3.6 (215 kw)	2009.01-	AT	Rear	SUV 4WD LLT	Model year from:2012,Model year to:2017	Propshaft	PS900172
Canyon							
3.5 (164 kw)	2003.09-2006.12	AT	Front	Pickup 4WD L52	Model year from:2004	Propshaft	202439
	2003.09-2006.12		Rear	Pickup 4WD L52	Model year from:2004;for OE No.:25787947	Propshaft	PS901549
	2003.09-2006.12		Rear	Pickup 4WD L52	Model year from:2004;for OE No.:25787946	Propshaft	PS901550
Envoy							
4.2 (205 kw)	2002.01-2005.12		Front	SUV 4WD LL8(254CUL6)	Model year from:2002	Propshaft	PS900188
	2002.01-2005.12		Front	SUV 4WD LL8(254CUL6)	RPO Code:NP8	Joint,propshaft	608073
4.2 (213 kw)	2007.09-2009.12		Front	SUV 4WD LL8(254CUL6)		Propshaft	PS900188
5.3 (216 kw)	2002.09-2006.12		Front	SUV 4WD LM4	RPO Code:NP8	Joint,propshaft	608073
Jimmy							
4.3 (142 kw)	1994.06-2005.05		Rear	SUV 4WD L35(262CUL6)/LU3	Model year from:1996,Model year to:1999;for OE No.:26055464	Propshaft	PS901541
	1994.06-2005.05	AT	Rear	SUV 4WD L35(262CUL6)/LU3	Model year from:1996,Model year to:2001;for OE No.:15038490	Propshaft	PS901542
	1994.06-2005.05		Front	SUV 4WD L35(262CUL6)/LU3	RPO Code:NP1	Joint,propshaft	608072
	1994.06-2005.05		Front	SUV 4WD L35(262CUL6)/LU3	RPO Code:NP8	Joint,propshaft	608073
	1994.06-2005.05		Front	SUV 4WD L35(262CUL6)/LU3		Joint,propshaft	699117
	1994.10-2005.05		Front	SUV RWD L35(262CUL6)/LU3	RPO Code:NP1	Joint,propshaft	608072
Safar Extended Cargo Van							
4.3 (123 kw)	1992.09-1994.12		Front	Van 4WD LB4		Joint,propshaft	699117
Safar Extended Passenger Van							
4.3 (123 kw)	1992.09-1994.12		Front	Bus 4WD LB4		Joint,propshaft	699117
Safar Standard Cargo Van							
4.3 (123 kw)	1992.09-1994.12		Front	Van 4WD LB4		Joint,propshaft	699117
Safar Standard Passenger Van							
4.3 (123 kw)	1992.09-1994.12		Front	Bus 4WD LB4		Joint,propshaft	699117
Safari							
4.3 (142 kw)	1994.09-2005.12	AT	Front	Van 4WD L35(262CUL6)/LU3	Model year from:2002,Model year to:2004	Propshaft	PS901539
	1994.09-2005.12	AT	Front	Bus 4WD L35(262CUL6)/LU3	Model year from:2002,Model year to:2004	Propshaft	PS901539
	1994.09-2005.12		Rear	Van 4WD L35(262CUL6)/LU3	Model year from:1999,Model year to:2003	Propshaft	PS901538
	1994.09-2005.12		Rear	Bus 4WD L35(262CUL6)/LU3	Model year from:1999,Model year to:2003	Propshaft	PS901538
	1994.09-2005.12		Front	Van 4WD L35(262CUL6)/LU3		Joint,propshaft	699117
	1994.09-2005.12		Front	Bus 4WD L35(262CUL6)/LU3		Joint,propshaft	699117
	1996.09-2005.12	AT	Front	Van 4WD L35(262CUL6)	Model year from:2002,Model year to:2004	Propshaft	PS901539
	1996.09-2005.12	AT	Front	Bus 4WD L35(262CUL6), LU3	Model year from:2002,Model year to:2004	Propshaft	PS901539
	1996.09-2005.12		Rear	Bus 4WD L35(262CUL6), LU3	Model year from:1999,Model year to:2003	Propshaft	PS901538
	1996.09-2005.12		Front	Van 4WD L35(262CUL6)		Joint,propshaft	699117

	YEAR	TRANSM.	FITTING POSITION	BODY STYLE & DRIVE TYPE & ENGINE	REMARKS	PRODUCT	GSP Ref.
GMC							
Sierra 1500							
5.3 (220 kw)	2004.09-2007.12	MT	Front	Pickup 4WD LM7	For Model year:2007	Propshaft	202538
6.0 (273 kw)	2007.09-2009.12	AT	Front	Pickup 4WD L76	Model year from:2008,Model year to:2009	Propshaft	202539
Sierra 1500 Standard Cab Pickup							
6.0 (274 kw)	2007.09-2009.12	AT	Front	Pickup 4WD L76	Model year from:2008,Model year to:2009	Propshaft	202539
Sierra 2500 HD							
6.0 (224 kw)	2006.09-2007.12	AT	Front	Pickup 4WD LQ4(364CUV8)		Propshaft	202537
6.0 (263 kw)	2007.09-2008.12	AT	Front	Pickup 4WD L96		Propshaft	202537
6.0 (268 kw)	2008.09-2013.12	AT	Front	Pickup 4WD L96	Model year to:2010	Propshaft	202537
6.6 (272 kw)	2007.09-2010.12	AT	Front	Pickup 4WD LMM		Propshaft	202537
Sierra 3500 HD							
6.0 (263 kw)	2007.09-2008.12	AT	Front	Pickup 4WD LY6		Propshaft	202537
6.0 (268 kw)	2008.09-2013.12	AT	Front	Pickup 4WD L96	Model year to:2010	Propshaft	202537
6.6 (272 kw)	2007.09-2010.12	AT	Front	Pickup 4WD LMM		Propshaft	202537
Sonoma							
4.3 (134 kw)	2000.09-2002.12		Front	Pickup RWD L35(262CUL6)	RPO Code:NP1	Joint,propshaft	608072
	2000.09-2004.12		Front	Pickup 4WD L35(262CUL6)	RPO Code:NP8	Joint,propshaft	608073
Terrain							
3.0 (197 kw)	2011.01-2012.12	AT	Rear	SUV 4WD LFW		Propshaft	PS900184
3.6 (224 kw)	2013.01-	AT	Rear	SUV 4WD LFX		Propshaft	PS900184
	2013.07-	AT	Rear	SUV 4WD LFX		Propshaft	PS900184
Yukon							
4.8 (205 kw)	1999.09-2000.12	4AT	Front	SUV 4WD LR4		Propshaft	PS900187
5.3 (213 kw)	1999.09-2000.12	4AT	Front	SUV 4WD LM7		Propshaft	PS900187
5.7 (149 kw)	1991.04-1995.12		Front	SUV RWD LO5	For Model year:1994	Propshaft	PS900186
	1991.04-1995.12		Front	SUV 4WD LO5	For Model year:1994	Propshaft	PS900186
	1991.04-1995.12		Front	SUV 4WD LO5	For Model year:1995	Propshaft	PS901537
5.7 (157 kw)	1991.04-1996.08		Front	SUV RWD LO5	For Model year:1994	Propshaft	PS900186
	1991.04-1996.08		Front	SUV 4WD LO5	For Model year:1994	Propshaft	PS900186
	1991.04-1996.08		Front	SUV 4WD LO5	Model year from:1995	Propshaft	PS901537
5.7 (190 kw)	1995.09-2000.12	4AT	Front	SUV 4WD L31	Model year from:1998	Propshaft	PS900187
6.2 (283 kw)	2006.09-2008.12	AT	Front	SUV 4WD L92	Model year from:2007	Propshaft	202539
	2006.09-2008.12		Rear	SUV 4WD L92		Propshaft	PS901532
6.2 (301 kw)	2008.09-2014.07	AT	Front	SUV 4WD L94, L9H	Model year from:2009	Propshaft	202539
	2008.09-2014.07	AT	Rear	SUV 4WD L94, L9H	Model year from:2009	Propshaft	PS901531
	2010.09-2013.12	AT	Rear	SUV 4WD L92		Propshaft	PS901531
6.5 (134 kw)	1993.09-1997.12		Front	SUV 4WD L56	For Model year:1994	Propshaft	PS900186
	1993.09-1997.12		Front	SUV 4WD L56	Model year from:1995,Model year to:1996	Propshaft	PS901537
Yukon XL 1500							
5.3 (213 kw)	1999.09-2005.12		Rear	SUV 4WD LM7		Propshaft	PS901533
	2001.09-2004.12		Rear	SUV 4WD L59		Propshaft	PS901533
5.3 (220 kw)	2003.09-2005.12		Rear	SUV 4WD L59		Propshaft	PS901533
	2003.09-2006.12		Rear	SUV 4WD L59		Propshaft	PS901533
5.3 (239 kw)	2006.09-2009.12	AT	Front	SUV 4WD LY5(325CUV8)	Model year from:2007	Propshaft	202539
	2006.09-2010.12	AT	Rear	SUV RWD LY5(325CUV8)	Model year from:2007,Model year to:2008	Propshaft	PS901392
6.0 (236 kw)	2000.09-2006.09		Rear	SUV RWD LQ4(364CUV8)		Propshaft	PS901527
6.0 (239 kw)	2000.09-2003.12		Rear	SUV 4WD LQ4(364CUV8)	Model year from:2001,Model year to:2002	Propshaft	PS901534
6.0 (242 kw)	2003.09-2005.12		Rear	SUV 4WD LQ4(364CUV8)		Propshaft	PS901533
6.0 (250 kw)	2005.09-2006.12		Rear	SUV 4WD LQ4(364CUV8)		Propshaft	PS901533
6.0 (263 kw)	2006.10-2014.05	AT	Front	SUV 4WD LY6	Model year from:2007,Model year to:2008	Propshaft	202539
	2006.10-2014.05		Rear	SUV 4WD LY6	Model year from:2008,Model year to:2009	Propshaft	PS901530
	2006.10-2014.05	AT	Rear	SUV 4WD LY6	Model year from:2007,Model year to:2008	Propshaft	PS901532
6.0 (273 kw)	2006.09-2009.12	AT	Front	SUV 4WD L76/LS2(364CUV8)	Model year from:2007,Model year to:2008	Propshaft	202539
	2006.09-2009.12		Rear	SUV 4WD L76/LS2(364CUV8)	Model year from:2008	Propshaft	PS901530
	2006.09-2009.12	AT	Rear	SUV 4WD L76/LS2(364CUV8)	Model year from:2007,Model year to:2008	Propshaft	PS901532
6.2 (279 kw)	2007.01-2014.07		Rear	SUV 4WD L92	Model year from:2009	Propshaft	PS901531
6.2 (301 kw)	2006.09-2014.07		Rear	SUV 4WD L94	Model year from:2009	Propshaft	PS901531
	2006.09-2014.07		Rear	SUV 4WD L94	Model year from:2007,Model year to:2008	Propshaft	PS901532
	2007.09-2014.07	AT	Rear	SUV RWD L94	Model year to:2008	Propshaft	PS901392
Yukon XL 2500							
6.0 (239 kw)	2000.09-2003.12		Rear	SUV 4WD LQ4(364CUV8)		Propshaft	PS901533
6.0 (242 kw)	2003.09-2005.12		Rear	SUV 4WD LQ4(364CUV8)		Propshaft	PS901533
6.0 (250 kw)	2005.09-2006.12		Rear	SUV 4WD LQ4(364CUV8)		Propshaft	PS901533
6.0 (262 kw)	2007.09-2009.12	AT	Front	SUV 4WD L96/LY6		Propshaft	202537
	2007.09-2009.12		Rear	SUV 4WD L96/LY6	Model year from:2008	Propshaft	PS901530

	YEAR	TRANSM.	FITTING POSITION	BODY STYLE & DRIVE TYPE & ENGINE	REMARKS	PRODUCT	GSP Ref.
GMC							
Yukon XL 2500							
6.0 (262 kw)	2009.09-2013.12	AT	Front	SUV 4WD L96		Propshaft	202537
	2009.09-2013.12		Rear	SUV 4WD L96	Model year from:2010	Propshaft	PS901530
6.0 (273 kw)	2006.09-2008.12	AT	Front	SUV 4WD L76		Propshaft	202537
	2006.09-2008.12		Rear	SUV 4WD L76	For Model year:2008	Propshaft	PS901530
8.1 (239 kw)	2003.09-2005.12		Rear	SUV 4WD L18(496CUV8)		Propshaft	PS901533
8.4 (254 kw)	2000.09-2003.12		Rear	SUV 4WD L18(496CUV8)		Propshaft	PS901533
GREAT WALL							
Hover H3 (Haval)							
2.0 (90 kw)	2010.01-	5MT	Front	SUV 4WD 4G63-S4M	For Model year:2012	Propshaft	PS901820
2.4 (93 kw)	2007.01-2010.12	5MT	Front	SUV 4WD 4G64-S4M		Propshaft	PS901816
	2007.01-2010.12	5MT	Front	SUV 4WD 4G64-S4M		Propshaft	PS901821
2.4 (100 kw)	2010.07-2013.12	5MT	Front	SUV 4WD 4G69-S4N	Model year to:2012	Propshaft	PS901820
Hover H5							
2.0 (90 kw)	2012.03-2014.12	5MT	Front	SUV 4WD 4G63S4M		Propshaft	PS901820
Hover H5/Haval 5							
2.4 (100 kw)	2010.06-	5MT	Front	SUV 4WD 4G69-S4N	Model year to:2014	Propshaft	PS901820
HOLDEN							
Commodore							
3.6 (175 kw)	2007.09-2013.10		Centre	Pickup RWD HN/LE0/LW2(218CUV6)		Center Bearing Support	538980
3.6 (180 kw)	2006.07-2013.05		Centre	Saloon RWD HB/LE0		Center Bearing Support	538980
	2007.09-2013.10		Centre	Pickup RWD HB/LE0		Center Bearing Support	538980
3.6 (195 kw)	2006.07-2013.05		Centre	Saloon RWD H7/LY7		Center Bearing Support	538980
HONDA							
Civic							
1.6 (92 kw)	1992.01-1995.10		Centre	Saloon 4WD D16Z7		Center Bearing Support	539080
CR-V							
1.5 (127 kw)	2017.08-	MT	Rear	SUV 4WD L15BY		Propshaft	PS901551
1.5 (140 kw)	2017.05-	CVT	Rear	SUV 4WD L15BY		Propshaft	PS901551
2.0 (98 kw)	1999.04-2002.02	4AT	Rear	SUV 4WD B20Z1	Model year to:2001	Propshaft	PS900251
2.0 (110 kw)	2001.09-2007.03		Centre	SUV 4WD K20A4		Center Bearing Support	539033
2.4 (112 kw)	2004.01-2006.09	AT	Rear	SUV 4WD K24A1		Propshaft	PS900250
2.4 (115 kw)	2002.08-2004.12	AT	Rear	SUV 4WD K24A1		Propshaft	PS900250
2.4 (118 kw)	2006.10-2012.06	AT	Rear	SUV 4WD K24Z1	Model year to:2011	Propshaft	PS900252
	2006.10-2012.06		Centre	SUV 4WD K24Z1		Center Bearing Support	539034
2.4 (119 kw)	2001.09-2006.12		Centre	SUV 4WD K24A1		Center Bearing Support	539033
2.4 (122 kw)	2009.09-2012.06		Rear	SUV 4WD K24Z4	Model year to:2011	Propshaft	PS900252
2.4 (124 kw)	2006.06-2012.06		Rear	SUV 4WD K24Z1	Model year to:2011	Propshaft	PS900252
2.4 (125 kw)	2007.04-2012.06	AT	Rear	SUV 4WD K24Z1	Model year to:2011	Propshaft	PS900252
2.4 (132 kw)	2012.01-2014.12	AT	Rear	SUV 4WD K24Z4	Model year to:2015	Propshaft	PS900249
2.4 (137 kw)	2017.09-	CVT	Rear	SUV 4WD K24W9		Propshaft	PS901551
2.4 (140 kw)	2012.01-	AT	Rear	SUV 4WD K24Z9	Model year to:2015	Propshaft	PS900249
Element							
2.4 (119 kw)	2003.01-2006.12	MT	Rear	SUV 4WD K24A4	Model year from:2003	Propshaft	PS900254
2.4 (124 kw)	2007.01-2011.12	MT	Rear	SUV 4WD K24A8		Propshaft	PS900254
Elysion							
2.4 (118 kw)	2004.05-2013.10		Centre	MPV FWD K24A6		Center Bearing Support	539033
HR-V							
1.6 (77 kw)	1999.02-2005.09		Centre	SUV 4WD D16W1		Center Bearing Support	539032
1.6 (91 kw)	1999.10-2005.09		Centre	SUV 4WD D16W5		Center Bearing Support	539032
Pilot							
3.5 (183 kw)	2011.01-2015.06	5AT	Rear	SUV 4WD J35Z4	Model year to:2015	Propshaft	PS900256
	2011.01-2015.06	6AT	Rear	SUV 4WD J35Z4	Model year from:2016,Model year to:2017	Propshaft	PS901487
3.5 (184 kw)	2006.01-2008.07	AT	Rear	SUV 4WD J35A9		Propshaft	PS900255
3.5 (186 kw)	2009.01-2015.12	5AT	Rear	SUV 4WD J35Z4	Model year from:2009,Model year to:2015	Propshaft	PS900256
	2009.01-2015.12	6AT	Rear	SUV 4WD J35Z4	Model year from:2016,Model year to:2017	Propshaft	PS901487
3.5 (189 kw)	2010.01-2015.06	5AT	Rear	SUV 4WD J35Z4		Propshaft	PS900256
3.5 (209 kw)	2015.07-	6AT	Rear	SUV 4WD J35Y6	Model year from:2016,Model year to:2017	Propshaft	PS901487
Ridgeline							
3.5 (182 kw)	2005.10-2014.06	AT	Rear	Pickup 4WD J35A7	Model year from:2010	Propshaft	PS901387
3.5 (188 kw)	2005.03-2014.06	AT	Rear	Pickup 4WD J35A9/J35Z5	Model year from:2010	Propshaft	PS901387
HONDA (GAC)							
Crosstour							
3.0 (193 kw)	2014.04-	AT	Rear	Hatchback 4WD J30A7	Model year to:2016	Propshaft	PS901388

	YEAR	TRANSM.	FITTING POSITION	BODY STYLE & DRIVE TYPE & ENGINE	REMARKS	PRODUCT	GSP Ref.
HUMMER							
H2							
6.0 (236 kw)	2003.01-2008.02	4AT	Rear	Terrain cab wagon closed 4WD LQ4(364CUV8)		Propshaft	PS900258
H3							
3.5 (162 kw)	2005.04-2010.12	AT/MT	Rear	Terrain cab wagon closed 4WD L52	Model year to:2008	Propshaft	PS901390
3.7 (180 kw)	2007.01-	AT	Front	Closed Off-Road Vehicle 4WD LLR	Model year to:2010	Propshaft	299303
	2007.01-	AT/MT	Rear	Closed Off-Road Vehicle 4WD LLR	Model year to:2008	Propshaft	PS901390
	2007.01-		-	Closed Off-Road Vehicle 4WD LLR		Joint,propshaft	699273
5.3 (224 kw)	2008.01-2010.12	AT	Front	Terrain cab wagon closed 4WD LH9		Propshaft	299303
H3T							
3.7 (180 kw)	2009.01-2010.12	AT/MT	Rear	Pickup 4WD LLR	Model year from:2009	Propshaft	PS901390
5.3 (224 kw)	2008.10-2010.12	AT	Front	Pickup 4WD LH8(325CUV8)	Model year to:2009	Propshaft	299303
	2008.10-2010.12	AT/MT	Rear	Pickup 4WD LH8(325CUV8)	Model year from:2009	Propshaft	PS901390
HYUNDAI							
Equus							
5.0 (311 kw)	2014.08-2016.12	8AT	Rear	Saloon RWD G8BE	Date from:2010.01,Date to:2015.12	Propshaft	PS901756
5.0 (316 kw)	2009.03-2016.12	8AT	Rear	Saloon RWD G8BE	Date from:2010.01,Date to:2015.12	Propshaft	PS901756
Galloper							
2.5 (62 kw)	1991.08-1998.07		Centre	Terrain cab wagon closed 4WD 4D56		Center Bearing Support	538619
2.5 (65 kw)	1997.11-2003.06		Centre	Terrain cab wagon closed 4WD D4BA		Center Bearing Support	538619
2.5 (70 kw)	1991.08-1998.07		Centre	Terrain cab wagon closed 4WD 4D56		Center Bearing Support	538619
2.5 (73 kw)	1997.11-2003.06		Centre	Terrain cab wagon closed 4WD D4BH		Center Bearing Support	538619
2.5 (77 kw)	1997.11-2003.06		Centre	Terrain cab wagon closed 4WD D4BH		Center Bearing Support	538619
3.0 (104 kw)	1991.08-1998.07		Centre	Terrain cab wagon closed 4WD 6G72		Center Bearing Support	538619
	1997.11-2003.06		Centre	Terrain cab wagon closed 4WD G6AT		Center Bearing Support	538619
Genesis							
3.8 (213 kw)	2008.06-2014.12	6AT	Rear	Saloon RWD G6DA		Propshaft	PS901553
4.6 (269 kw)	2013.05-2014.12	6AT	Rear	Saloon RWD G8BA		Propshaft	PS901741
Genesis Coupe							
2.0 (154 kw)	2008.06-2014.02	5AT	Rear	Coupe RWD G4KF	Date to:2012.12	Propshaft	PS901740
	2008.06-2014.02	6MT	Rear	Coupe RWD G4KF	Date to:2011.12	Propshaft	PS901738
2.0 (157 kw)	2008.06-2014.02	5AT	Rear	Coupe RWD G4KF	Date to:2012.12	Propshaft	PS901740
	2008.06-2014.02	6MT	Rear	Coupe RWD G4KF	Date to:2012.12	Propshaft	PS901738
2.0 (202 kw)	2012.04-	AT	Rear	Coupe RWD G4KF	Model year from:2013	Propshaft	PS901552
2.0 (204 kw)	2010.09-2014.02	AT	Rear	Coupe RWD G4KF	Model year from:2013	Propshaft	PS901552
3.8 (223 kw)	2008.06-2014.02	6AT	Rear	Coupe RWD G6DA	Date to:2012.12	Propshaft	PS901742
	2008.06-2014.02	6MT	Rear	Coupe RWD G6DA	Date to:2012.12	Propshaft	PS901739
3.8 (260 kw)	2010.01-	AT	Rear	Coupe RWD G6DJ	Model year from:2013,Model year to:2016	Propshaft	PS901554
Genesis Prada							
3.8 (246 kw)	2011.01-2014.12	8AT	Rear	Saloon RWD G6DJ		Propshaft	PS901746
5.0 (316 kw)	2012.10-2014.12	8AT	Rear	Saloon RWD G8BE		Propshaft	PS901747
Grand Santa Fé							
3.3 (210 kw)	2013.07-2018.11	6AT	Front	SUV 4WD G6DH		Propshaft	PS901557
3.3 (216 kw)	2013.07-	6AT	Front	SUV 4WD G6DH		Propshaft	PS901557
Grand Starex							
2.4 (117 kw)	2012.07-		Centre	Bus RWD G4KC		Center Bearing Support	539948
2.5 (103 kw)	2008.02-		Centre	Bus RWD D4CB		Center Bearing Support	539948
H-1							
2.4 (132 kw)	2015.08-		Centre	Van RWD G4KE		Center Bearing Support	539948
H-1 Travel/Starex/Grand Starex/I800/Montana							
2.4 (117 kw)	2007.05-2021.05		Centre	Bus RWD L4KB		Center Bearing Support	539948
H-1 Travel/Starex/Grand Starex/i800/Montana							
2.5 (129 kw)	2013.01-		Centre	Bus 4WD D4CB		Center Bearing Support	539948
H-1/Starex/Satellite/H200							
2.5 (63 kw)	1997.10-2002.08		Centre	Bus RWD D4BF		Center Bearing Support	539948
2.5 (107 kw)	2002.01-2007.12		Centre	Bus RWD D4CB		Center Bearing Support	539948
H1							
2.4 (82 kw)	1997.06-2004.04		Centre	Bus RWD G4CS		Center Bearing Support	538630
2.4 (126 kw)	2008.02-		Centre	Van RWD G4KC		Center Bearing Support	539948
	2008.02-		Centre	Bus RWD G4KC		Center Bearing Support	539948
2.4 (129 kw)	2007.09-	5MT	Rear	Van RWD G4KC	Date from:2010.02,Date to:2015.07	Propshaft	PS901966
	2007.09-		Centre	Van RWD G4KC		Center Bearing Support	539948
	2008.02-		Centre	Bus RWD G4KC		Center Bearing Support	539948
2.5 (59 kw)	1997.06-2004.04		Centre	Bus RWD D4BF		Center Bearing Support	539948
	2000.03-2000.09		Centre	Van RWD D4BF		Center Bearing Support	538630

	YEAR	TRANSM.	FITTING POSITION	BODY STYLE & DRIVE TYPE & ENGINE	REMARKS	PRODUCT	GSP Ref.
HYUNDAI							
H1							
2.5 (63 kw)	1998.10-2008.04		Centre	Van RWD D4BF		Center Bearing Support	539948
2.5 (73 kw)	1997.10-2007.12		Centre	Bus RWD D4BH	Date from:2001.07,Date to:2007.11	Center Bearing Support	538630
	1997.10-2007.12		Centre	Bus RWD D4BH	Date from:2007.08,Date to:2015.07	Center Bearing Support	539948
	2000.03-2006.10		Centre	Van RWD D4BH		Center Bearing Support	538630
	2000.06-2006.10		Centre	Platform/Chassis RWD D4BH		Center Bearing Support	538630
2.5 (74 kw)	2001.10-2007.08		Centre	Van RWD D4BH	Date from:2000.07,Date to:2007.11	Center Bearing Support	538630
	2001.10-2007.08		Centre	Van RWD D4BH	Date from:2007.08	Center Bearing Support	539948
	2004.05-2007.12		Centre	Bus RWD D4BH	Date from:2001.07,Date to:2007.11	Center Bearing Support	538630
	2004.05-2007.12		Centre	Bus RWD D4BH	Date from:2007.08,Date to:2015.07	Center Bearing Support	539948
	2007.09-		Centre	Van RWD D4BH		Center Bearing Support	539948
2.5 (81 kw)	2006.06-2007.12		Centre	Bus RWD D4CB	Date from:2002.11,Date to:2007.11	Center Bearing Support	538630
	2006.06-2007.12		Centre	Bus RWD D4CB	Date from:2007.08,Date to:2015.07	Center Bearing Support	539948
	2008.02-	5MT	Rear	Van RWD D4CB	Model year to:2010	Propshaft	PS900260
	2008.02-		Centre	Van RWD D4CB		Center Bearing Support	539948
	2010.07-	6MT	Rear	Bus RWD D4CB		Propshaft	PS901555
	2010.07-		Centre	Bus RWD D4CB		Center Bearing Support	539948
2.5 (85 kw)	2008.12-	5MT	Rear	Van RWD D4CB	Model year to:2010	Propshaft	PS900260
	2008.12-		Centre	Van RWD D4CB		Center Bearing Support	539948
	2011.08-	5AT	Rear	Bus RWD D4CB		Propshaft	PS901556
	2011.08-		Centre	Bus RWD D4CB		Center Bearing Support	539948
2.5 (94 kw)	2007.09-	5MT	Rear	Van RWD D4CB	Model year to:2010	Propshaft	PS900260
	2007.09-		Centre	Van RWD D4CB		Center Bearing Support	539948
	2008.02-	5MT	Rear	Bus RWD D4CB	Model year to:2010	Propshaft	PS900260
	2008.02-		Centre	Bus RWD D4CB		Center Bearing Support	539948
2.5 (100 kw)	2007.09-	5MT	Rear	Bus RWD D4CB	Model year to:2010	Propshaft	PS900260
	2007.09-	5MT	Rear	Van RWD D4CB	Model year to:2010	Propshaft	PS900260
	2007.09-		Centre	Bus RWD D4CB		Center Bearing Support	539948
	2007.09-		Centre	Van RWD D4CB		Center Bearing Support	539948
2.5 (103 kw)	2002.12-2007.09		Centre	Bus RWD D4CB	Date from:2001.07,Date to:2007.11	Center Bearing Support	538630
	2002.12-2007.09		Centre	Bus RWD D4CB	Date from:2007.08,Date to:2015.07	Center Bearing Support	539948
	2003.08-2007.12		Centre	Van RWD D4CB	Date from:2000.07,Date to:2007.11	Center Bearing Support	538630
	2003.08-2007.12		Centre	Van RWD D4CB	Date from:2007.08	Center Bearing Support	539948
2.5 (110 kw)	2018.10-		Centre	Bus RWD D4CB		Center Bearing Support	539948
2.5 (120 kw)	2002.12-2004.04		Centre	Bus RWD D4CB		Center Bearing Support	539948
	2008.02-	5MT	Rear	Van RWD D4CB	Model year to:2010	Propshaft	PS900260
	2008.02-		Centre	Van RWD D4CB		Center Bearing Support	539948
	2008.05-	5MT	Rear	Bus RWD D4CB	Model year to:2010	Propshaft	PS900260
	2008.05-		Centre	Bus RWD D4CB		Center Bearing Support	539948
2.5 (125 kw)	2008.02-	5MT	Rear	Van RWD D4CB	Model year to:2010	Propshaft	PS900260
	2008.02-		Centre	Van RWD D4CB		Center Bearing Support	539948
	2008.05-	5MT	Rear	Bus RWD D4CB	Model year to:2010	Propshaft	PS900260
	2008.05-		Centre	Bus RWD D4CB		Center Bearing Support	539948
2.5 (129 kw)	2015.01-	5AT	Rear	Bus RWD D4CB		Propshaft	PS901556
	2015.01-	6MT	Rear	Bus RWD D4CB		Propshaft	PS901555
	2015.01-		Centre	Bus RWD D4CB		Center Bearing Support	539948
H1 Travel							
2.5 (74 kw)	2008.03-		Centre	Bus RWD D4CB		Center Bearing Support	539948
H200							
2.4 (82 kw)	2000.03-2004.04		Centre	Van RWD G4CS		Center Bearing Support	538630
2.4 (101 kw)	2003.02-2004.04		Centre	Bus RWD G4JS		Center Bearing Support	539948
2.5 (57 kw)	1997.10-2004.04		Centre	Bus RWD D4BF, D4BH		Center Bearing Support	539948
H300							
2.5 (85 kw)	2008.09-2013.12		Centre	Van RWD D4CB		Center Bearing Support	539948
2.5 (100 kw)	2007.09-		Centre	Van RWD D4CB		Center Bearing Support	539948
2.5 (125 kw)	2008.02-2012.12		Centre	Van RWD D4CB		Center Bearing Support	539948
i800							
2.5 (100 kw)	2011.01-		Centre	Bus RWD D4CB		Center Bearing Support	539948
2.5 (125 kw)	2007.09-		Centre	Bus RWD D4CB		Center Bearing Support	539948
iLoad							
2.5 (85 kw)	2009.01-		Centre	Van RWD D4CB		Center Bearing Support	539948
iX35							
2.0 (100 kw)	2009.08-2015.12	AT/MT	Rear	SUV 4WD D4HA	Date to:2010.12	Propshaft	PS900271
	2009.08-2015.12	AT/MT	Rear	SUV 4WD D4HA	Date from:2010.12	Propshaft	PS900272
	2009.08-2015.12		Front;Rear	SUV 4WD D4HA		Center Bearing Support	539906

	YEAR	TRANSM.	FITTING POSITION	BODY STYLE & DRIVE TYPE & ENGINE	REMARKS	PRODUCT	GSP Ref.
HYUNDAI							
iX35							
2.0 (100 kw)	2009.08-2015.12		Centre	SUV 4WD D4HA		Center Bearing Support	538624
	2009.08-2015.12		Centre	SUV 4WD D4HA		Center Bearing Support Kit	538685S
	2009.08-2015.12		Front;Rear	SUV 4WD D4HA		Flexible Coupling	533419
	2015.05-2015.12		Centre	SUV Van 4WD D4HA		Center Bearing Support	538624
	2015.05-2015.12		Front;Rear	SUV Van 4WD D4HA		Flexible Coupling	533419
2.0 (110 kw)	2009.08-2013.07	AT/MT	Rear	SUV 4WD G4KD	Date to:2010.12	Propshaft	PS900271
	2009.08-2013.07	AT/MT	Rear	SUV 4WD G4KD	Date from:2010.12	Propshaft	PS900272
	2013.08-2015.12	6AT	Front	SUV 4WD G4NA		Propshaft	PS901559
2.0 (120 kw)	2009.08-2013.07	AT/MT	Rear	SUV 4WD G4KD	Date to:2010.12	Propshaft	PS900271
	2009.08-2013.07	AT/MT	Rear	SUV 4WD G4KD	Date from:2010.12	Propshaft	PS900272
	2009.08-2013.07		Front;Rear	SUV 4WD G4KD		Center Bearing Support	539906
	2009.08-2013.07		Centre	SUV 4WD G4KD		Center Bearing Support	538624
	2009.08-2013.07		Centre	SUV 4WD G4KD		Center Bearing Support Kit	538685S
	2009.08-2013.07		Front;Rear	SUV 4WD G4KD		Flexible Coupling	533419
2.0 (122 kw)	2013.08-2015.12	6AT	Front	SUV 4WD G4NC		Propshaft	PS901559
	2013.08-2015.12		Front;Rear	SUV 4WD G4NC		Center Bearing Support	539906
	2013.08-2015.12		Centre	SUV 4WD G4NC		Center Bearing Support	538624
2.0 (135 kw)	2009.08-2015.12	AT/MT	Rear	SUV 4WD D4HA	Date to:2010.12	Propshaft	PS900271
	2009.08-2015.12	AT/MT	Rear	SUV 4WD D4HA	Date from:2010.12	Propshaft	PS900272
	2009.08-2015.12		Front;Rear	SUV 4WD D4HA		Center Bearing Support	539906
	2009.08-2015.12		Centre	SUV 4WD D4HA		Center Bearing Support	538624
	2009.08-2015.12		Centre	SUV 4WD D4HA		Center Bearing Support Kit	538685S
	2009.08-2015.12		Front;Rear	SUV 4WD D4HA		Flexible Coupling	533419
2.4 (125 kw)	2014.12-2015.06		Front;Rear	SUV 4WD G4KE		Flexible Coupling	533419
2.4 (130 kw)	2010.01-2015.12	AT/MT	Rear	SUV 4WD G4KE	Date to:2010.12	Propshaft	PS900271
	2010.01-2015.12	AT/MT	Rear	SUV 4WD G4KE	Date from:2010.12	Propshaft	PS900272
	2010.01-2015.12		Front;Rear	SUV 4WD G4KE		Flexible Coupling	533419
iX55							
3.0 (176 kw)	2008.09-2012.11		Front;Rear	SUV 4WD D6EA		Flexible Coupling	533419
3.0 (184 kw)	2011.09-2012.11		Front;Rear	SUV 4WD D6EA		Flexible Coupling	533419
Montana							
2.5 (85 kw)	2010.07-	5AT	Rear	Bus RWD D4CB		Propshaft	PS901556
	2010.07-		Centre	Bus RWD D4CB		Center Bearing Support	539948
Rohens Coupe							
2.0 (204 kw)	2010.09-2014.02	AT	Rear	Coupe RWD G4KF	Model year from:2013	Propshaft	PS901552
Santa Fé							
2.0 (83 kw)	2001.04-2005.12		Rear	SUV Van 4WD D4EA		Flexible Coupling	519580
	2001.04-2006.03		Centre	SUV 4WD D4EA		Center Bearing Support	538623
	2001.04-2006.03		Centre	SUV 4WD D4EA		Center Bearing Support Kit	538687S
	2001.04-2006.03		Front	SUV 4WD D4EA		Flexible Coupling	510597
	2001.04-2006.03		Rear	SUV 4WD D4EA		Flexible Coupling	519580
2.0 (92 kw)	2003.08-2006.03		Centre	SUV 4WD D4EA		Center Bearing Support	538623
	2003.08-2006.03		Centre	SUV Van 4WD D4EA		Center Bearing Support	538623
	2003.08-2006.03		Centre	SUV 4WD D4EA		Center Bearing Support Kit	538687S
	2003.08-2006.03		Centre	SUV Van 4WD D4EA		Center Bearing Support Kit	538687S
	2003.08-2006.03		Front	SUV 4WD D4EA		Flexible Coupling	510597
	2003.08-2006.03		Rear	SUV 4WD D4EA		Flexible Coupling	519580
	2003.08-2006.03		Rear	SUV Van 4WD D4EA		Flexible Coupling	519580
2.0 (107 kw)	2003.11-2005.12		Front	SUV 4WD D4EA		Flexible Coupling	510597
	2003.11-2005.12		Rear	SUV 4WD D4EA		Flexible Coupling	519580
2.0 (110 kw)	2010.12-2012.12		Centre	SUV 4WD D4HA		Center Bearing Support Kit	538685S
2.0 (135 kw)	2006.03-2012.12		Centre	SUV 4WD D4HA		Center Bearing Support	538623
	2006.03-2012.12		Centre	SUV 4WD D4HA		Center Bearing Support Kit	538685S
	2006.03-2012.12		Centre	SUV 4WD D4HA	Code:CM,BM,Date to:2009.09	Center Bearing Support Kit	538687S
2.0 (197 kw)	2012.09-	AT	Rear	SUV 4WD G4KH	Model year from:2013,Model year to:2016	Propshaft	PS901558
2.2 (102 kw)	2006.03-2007.08		Centre	SUV 4WD D4EB		Center Bearing Support	538623
	2006.03-2007.08		Centre	SUV FWD D4EB		Center Bearing Support	538623
	2006.03-2007.08		Centre	SUV 4WD D4EB		Center Bearing Support Kit	538685S
	2006.03-2007.08		Centre	SUV 4WD D4EB	Code:BM,CM,Date to:2009.09	Center Bearing Support Kit	538687S
	2006.03-2007.08		Centre	SUV FWD D4EB		Center Bearing Support Kit	538687S
	2006.03-2007.08		Front;Rear	SUV 4WD D4EB		Flexible Coupling	533419
2.2 (110 kw)	2005.11-2011.12		Centre	SUV 4WD D4EB		Center Bearing Support	538623
	2005.11-2011.12		Centre	SUV FWD D4EB		Center Bearing Support	538623
	2005.11-2011.12		Centre	SUV Van 4WD D4EB		Center Bearing Support	538623

	YEAR	TRANSM.	FITTING POSITION	BODY STYLE & DRIVE TYPE & ENGINE	REMARKS	PRODUCT	GSP Ref.
HYUNDAI **Santa Fé**							
2.2 (110 kw)	2005.11-2011.12		Centre	SUV 4WD D4EB		Center Bearing Support Kit	538685S
	2005.11-2011.12		Centre	SUV 4WD D4EB	Date to:2009.09	Center Bearing Support Kit	538687S
	2005.11-2011.12		Centre	SUV FWD D4EB		Center Bearing Support Kit	538687S
	2005.11-2011.12		Centre	SUV Van 4WD D4EB		Center Bearing Support Kit	538687S
	2005.11-2011.12		Front;Rear	SUV 4WD D4EB		Flexible Coupling	533419
	2005.11-2011.12		Front;Rear	SUV Van 4WD D4EB		Flexible Coupling	533419
2.2 (114 kw)	2006.09-2011.12		Centre	SUV 4WD D4EB		Center Bearing Support	538623
	2006.09-2011.12		Centre	SUV FWD D4EB		Center Bearing Support	538623
	2006.09-2011.12		Centre	SUV Van 4WD D4EB		Center Bearing Support	538623
	2006.09-2011.12		Centre	SUV Van FWD D4EB		Center Bearing Support	538623
	2006.09-2011.12		Centre	SUV 4WD D4EB		Center Bearing Support Kit	538685S
	2006.09-2011.12		Centre	SUV 4WD D4EB	Date to:2009.09	Center Bearing Support Kit	538687S
	2006.09-2011.12		Centre	SUV FWD D4EB		Center Bearing Support Kit	538687S
	2006.09-2011.12		Centre	SUV Van 4WD D4EB		Center Bearing Support Kit	538687S
	2006.09-2011.12		Centre	SUV Van FWD D4EB		Center Bearing Support Kit	538687S
	2006.09-2011.12		Front;Rear	SUV 4WD D4EB		Flexible Coupling	533419
	2006.09-2011.12		Front;Rear	SUV Van 4WD D4EB		Flexible Coupling	533419
2.2 (145 kw)	2009.01-2013.05		Centre	SUV 4WD D4HB		Center Bearing Support	538623
	2009.01-2013.05		Centre	SUV Van 4WD D4HB		Center Bearing Support	538623
	2009.01-2013.05		Centre	SUV 4WD D4HB		Center Bearing Support Kit	538685S
	2009.01-2013.05		Centre	SUV 4WD D4HB	Code:CM,Date to:2009.09	Center Bearing Support Kit	538687S
	2009.01-2013.05		Centre	SUV Van 4WD D4HB		Center Bearing Support Kit	538687S
	2009.01-2013.05		Front;Rear	SUV 4WD D4HB		Flexible Coupling	533419
	2009.01-2013.05		Front;Rear	SUV Van 4WD D4HB		Flexible Coupling	533419
	2012.08-		Front;Rear	SUV 4WD D4HB		Flexible Coupling	533419
	2015.05-		Front;Rear	SUV Van 4WD D4HB		Flexible Coupling	533419
2.2 (147 kw)	2009.01-2012.12		Centre	SUV 4WD D4HB		Center Bearing Support	538623
	2009.01-2012.12		Centre	SUV 4WD D4HB		Center Bearing Support Kit	538687S
	2009.01-2012.12		Front;Rear	SUV 4WD D4HB		Flexible Coupling	533419
	2012.08-2018.08		Front;Rear	SUV 4WD D4HB		Flexible Coupling	533419
2.4 (100 kw)	2000.08-2005.12	MT	Rear	SUV 4WD G4JS	Model year from:2003	Propshaft	PS900264
	2000.08-2005.12		Front	SUV 4WD G4JS		Flexible Coupling	510597
	2000.08-2005.12		Rear	SUV 4WD G4JS		Flexible Coupling	519580
2.4 (107 kw)	2000.08-2005.12	MT	Rear	SUV 4WD G4JS	Model year from:2003	Propshaft	PS900264
	2000.08-2005.12		Front	SUV 4WD G4JS		Flexible Coupling	510597
	2000.08-2005.12		Rear	SUV 4WD G4JS		Flexible Coupling	519580
	2000.08-2005.12		Rear	SUV Van 4WD G4JS		Flexible Coupling	519580
2.4 (128 kw)	2009.01-2012.12	AT	Rear	SUV 4WD G4KE		Propshaft	PS900268
	2009.01-2012.12		Centre	SUV 4WD G4KE		Center Bearing Support Kit	538685S
2.4 (141 kw)	2012.09-2015.10	AT	Rear	SUV 4WD G4KJ	Model year from:2013,Model year to:2016	Propshaft	PS901558
2.7 (125 kw)	2006.03-2008.12		Centre	SUV FWD G6EA		Center Bearing Support	538623
	2006.03-2008.12		Centre	SUV FWD G6EA		Center Bearing Support Kit	538687S
	2006.03-2009.09		Centre	SUV 4WD G6EA		Center Bearing Support	538623
	2006.03-2009.09		Centre	SUV 4WD G6EA		Center Bearing Support Kit	538687S
	2006.03-2009.09		Front;Rear	SUV 4WD G6EA		Flexible Coupling	533419
2.7 (127 kw)	2000.08-2006.03	AT	Rear	SUV 4WD G6BA	Model year from:2003	Propshaft	PS900264
	2000.08-2006.03		Centre	SUV 4WD G6BA		Center Bearing Support	538623
	2000.08-2006.03		Centre	SUV 4WD G6BA		Center Bearing Support Kit	538687S
	2000.08-2006.03		Front	SUV 4WD G6BA		Flexible Coupling	510597
	2000.08-2006.03		Rear	SUV 4WD G6BA		Flexible Coupling	519580
2.7 (129 kw)	2002.09-2004.12		Front	SUV 4WD G6BA		Flexible Coupling	510597
	2002.09-2004.12		Rear	SUV 4WD G6BA		Flexible Coupling	519580
	2004.08-2006.03		Centre	SUV FWD G6BA		Center Bearing Support	538623
	2004.08-2006.03		Centre	SUV FWD G6BA		Center Bearing Support Kit	538687S
2.7 (132 kw)	2001.03-2005.12		Centre	SUV 4WD G6EA		Center Bearing Support	538623
	2001.03-2005.12		Centre	SUV 4WD G6EA		Center Bearing Support Kit	538687S
	2001.03-2005.12		Front	SUV 4WD G6EA		Flexible Coupling	510597
	2001.03-2005.12		Rear	SUV 4WD G6EA		Flexible Coupling	519580
2.7 (136 kw)	2006.09-2009.12		Centre	SUV FWD G6EA		Center Bearing Support	538623
	2006.09-2009.12		Centre	SUV FWD G6EA		Center Bearing Support Kit	538687S
2.7 (139 kw)	2005.11-2011.09		Centre	SUV FWD G6EA		Center Bearing Support	538623
	2005.11-2011.09		Centre	SUV FWD G6EA		Center Bearing Support Kit	538687S
	2005.11-2012.10	AT	Rear	SUV 4WD G6EA		Propshaft	PS900269
	2005.11-2012.10		Centre	SUV 4WD G6EA		Center Bearing Support	538623

	YEAR	TRANSM.	FITTING POSITION	BODY STYLE & DRIVE TYPE & ENGINE	REMARKS	PRODUCT	GSP Ref.
HYUNDAI							
Santa Fé							
2.7 (139 kw)	2005.11-2012.10		Centre	SUV 4WD G6EA		Center Bearing Support Kit	538687S
	2005.11-2012.10		Front;Rear	SUV 4WD G6EA		Flexible Coupling	533419
2.7 (147 kw)	2007.01-2011.12		Centre	SUV 4WD G6EA		Center Bearing Support	538623
	2007.01-2011.12		Centre	SUV 4WD G6EA		Center Bearing Support Kit	538687S
	2007.01-2011.12		Front;Rear	SUV 4WD G6EA		Flexible Coupling	533419
3.3 (173 kw)	2006.03-2012.12		Centre	SUV 4WD G6DB		Center Bearing Support	538623
	2006.03-2012.12		Centre	SUV 4WD G6DB		Center Bearing Support Kit	538687S
3.3 (180 kw)	2006.03-2009.12	AT	Rear	SUV 4WD G6DB	Model year from:2007	Propshaft	PS900269
3.5 (203 kw)	2009.01-2013.05	6AT	Rear	SUV 4WD G6DC		Propshaft	PS900266
3.5 (204 kw)	2011.08-2013.05	6AT	Rear	SUV 4WD G6DC		Propshaft	PS900266
3.5 (206 kw)	2009.09-2012.12	AT	Rear	SUV 4WD G6DC		Propshaft	PS900266
3.5 (210 kw)	2010.07-2012.12	AT	Rear	SUV 4WD G6DC		Propshaft	PS900266
Satellite							
2.5 (74 kw)	1997.06-2007.12		Centre	Bus RWD D4BH		Center Bearing Support	539948
Starex							
2.4 (101 kw)	2008.02-		Centre	Bus RWD G4CS		Center Bearing Support	539948
2.5 (74 kw)	2007.09-		Centre	Bus RWD D4BH		Center Bearing Support	539948
2.5 (100 kw)	2007.09-		Centre	Bus RWD D4CB		Center Bearing Support	539948
2.5 (125 kw)	2007.09-		Centre	Bus RWD D4CB		Center Bearing Support	539948
Tucson							
1.6 (130 kw)	2015.06-2020.09	AT	Rear	SUV 4WD G4FJ	Model year to:2018	Propshaft	PS901718
	2015.06-2020.09		Front;Rear	SUV 4WD G4FJ		Flexible Coupling	533419
2.0 (83 kw)	2004.08-2010.03		Centre	SUV FWD D4EA		Center Bearing Support Kit	538686S
	2004.08-2010.04		Front;Rear	SUV 4WD D4EA		Center Bearing Support	539906
	2004.08-2010.04		Centre	SUV 4WD D4EA		Center Bearing Support	538616
	2004.08-2010.04		Centre	SUV 4WD D4EA		Center Bearing Support Kit	538686S
	2004.08-2010.04		Rear	SUV 4WD D4EA		Flexible Coupling	519580
2.0 (88 kw)	2007.01-2010.03		Centre	SUV 4WD D4EA		Center Bearing Support	538616
	2007.01-2010.03		Centre	SUV 4WD D4EA		Center Bearing Support Kit	538686S
	2007.01-2010.03		Rear	SUV 4WD D4EA		Flexible Coupling	519580
2.0 (100 kw)	2006.01-2010.03		Front;Rear	SUV 4WD D4EA		Center Bearing Support	539906
	2006.01-2010.03		Centre	SUV 4WD D4EA		Center Bearing Support	538616
	2006.01-2010.03		Centre	SUV 4WD D4EA		Center Bearing Support Kit	538686S
	2006.01-2010.03		Rear	SUV 4WD D4EA		Flexible Coupling	519580
	2015.06-2020.09		Front;Rear	SUV 4WD D4HA		Flexible Coupling	533419
2.0 (103 kw)	2006.01-2010.03		Front;Rear	SUV 4WD D4EA		Center Bearing Support	539906
	2006.01-2010.03		Centre	SUV 4WD D4EA		Center Bearing Support	538616
	2006.01-2010.03		Centre	SUV 4WD D4EA		Center Bearing Support Kit	538686S
	2006.01-2010.03		Rear	SUV 4WD D4EA		Flexible Coupling	519580
2.0 (104 kw)	2004.06-2010.03	AT	Rear	SUV 4WD G4GC	Model year from:2005,Model year to:2009	Propshaft	PS900273
	2004.06-2010.03		Front;Rear	SUV 4WD G4GC		Center Bearing Support	539906
	2004.06-2010.03		Centre	SUV 4WD G4GC		Center Bearing Support	538616
	2004.06-2010.03		Centre	SUV 4WD G4GC		Center Bearing Support Kit	538686S
	2009.06-2010.03		Centre	SUV 4WD G4GC		Center Bearing Support Kit	538686S
2.0 (105 kw)	2005.07-2010.11	AT	Rear	SUV 4WD G4GC	Model year to:2009	Propshaft	PS900273
	2005.07-2010.11		Centre	SUV 4WD G4GC		Center Bearing Support	538616
	2005.07-2010.11		Centre	SUV 4WD G4GC		Center Bearing Support Kit	538686S
2.0 (110 kw)	2008.01-2010.03		Front;Rear	SUV 4WD D4EA		Center Bearing Support	539906
	2008.01-2010.03		Centre	SUV 4WD D4EA		Center Bearing Support	538616
	2008.01-2010.03		Centre	SUV 4WD D4EA		Center Bearing Support Kit	538686S
	2008.01-2010.03		Rear	SUV 4WD D4EA		Flexible Coupling	519580
	2015.06-2020.09		Front;Rear	SUV 4WD G4NA		Flexible Coupling	533419
2.0 (114 kw)	2015.06-2020.09	AT	Rear	SUV 4WD G4NA	Model year to:2018	Propshaft	PS901718
	2015.06-2020.09		Front;Rear	SUV 4WD G4NA		Flexible Coupling	533419
2.0 (115 kw)	2015.06-2020.09		Front;Rear	SUV 4WD G4NA		Flexible Coupling	533419
2.0 (121 kw)	2015.06-2020.09		Front;Rear	SUV 4WD G4NC		Flexible Coupling	533419
2.0 (129 kw)	2015.06-2020.09		Front;Rear	SUV 4WD D4HA		Flexible Coupling	533419
2.0 (131 kw)	2015.06-2020.09		Front;Rear	SUV 4WD D4HA		Flexible Coupling	533419
2.0 (132 kw)	2010.01-2015.06	AT/MT	Rear	SUV 4WD D4HA	Date to:2010.12	Propshaft	PS900271
2.0 (136 kw)	2015.06-2020.09		Front;Rear	SUV 4WD D4HA		Flexible Coupling	533419
2.4 (129 kw)	2009.08-2015.06	AT	Rear	SUV 4WD G4KE		Propshaft	PS900272
2.7 (129 kw)	2004.08-2010.11	AT	Rear	SUV 4WD G6BA	Model year from:2005,Model year to:2009;for OE No.:49300-2E050	Propshaft	PS900273
	2004.08-2010.11		Centre	SUV 4WD G6BA		Center Bearing Support	538616
	2004.08-2010.11		Centre	SUV 4WD G6BA		Center Bearing Support Kit	538686S

	YEAR	TRANSM.	FITTING POSITION	BODY STYLE & DRIVE TYPE & ENGINE	REMARKS	PRODUCT	GSP Ref.
HYUNDAI							
Tucson ix							
2.0 (122 kw)	2009.08-2013.07	AT/MT	Rear	SUV 4WD G4KD	Date to:2010.12	Propshaft	PS900271
	2009.08-2013.07	AT/MT	Rear	SUV 4WD G4KD	Date from:2011.01	Propshaft	PS900272
Tucson iX35							
2.4 (128 kw)	2010.07-2013.12	AT/MT	Rear	SUV 4WD G4KE	Date from:2011.01,Date to:2013.08	Propshaft	PS900272
	2010.07-2013.12		Front;Rear	SUV 4WD G4KE		Center Bearing Support	539906
	2010.07-2013.12		Centre	SUV 4WD G4KE		Center Bearing Support	538624
	2010.07-2013.12		Centre	SUV 4WD G4KE		Center Bearing Support Kit	538685S
	2010.07-2013.12		Front;Rear	SUV 4WD G4KE		Flexible Coupling	533419
Veracruz							
3.0 (176 kw)	2008.01-2012.11		Front;Rear	SUV 4WD D6EA		Flexible Coupling	533419
HYUNDAI (BEIJING)							
Santa Fé							
2.0 (180 kw)	2012.12-	AT	Rear	SUV 4WD G4KH	Model year from:2016,Model year to:2018	Propshaft	PS900267
2.4 (139 kw)	2012.12-	AT	Rear	SUV 4WD G4KJ	Model year from:2016,Model year to:2018	Propshaft	PS900267
Tucson							
2.0 (104 kw)	2005.05-2015.12	AT	Rear	SUV 4WD G4GC	Model year to:2009	Propshaft	PS900273
	2005.05-2015.12		Centre	SUV 4WD G4GC		Center Bearing Support	538616
2.7 (127 kw)	2005.05-	AT	Rear	SUV 4WD G6BA	Model year to:2009;for OE No.:49300-2E050	Propshaft	PS900273
	2005.05-		Centre	SUV 4WD G6BA		Center Bearing Support	538616
HYUNDAI (HUATAI)							
Santa Fé							
2.0 (85 kw)	2006.10-2008.12		Centre	SUV FWD D4EA-V		Center Bearing Support	538623
	2006.10-2008.12		Centre	SUV FWD D4EA-V		Center Bearing Support Kit	538687S
2.0 (92 kw)	2006.10-2013.12		Centre	SUV 4WD D4EA-V		Center Bearing Support	538623
	2006.10-2013.12		Centre	SUV 4WD D4EA-V		Center Bearing Support Kit	538687S
2.7 (132 kw)	2006.10-2013.12		Centre	SUV 4WD G6BA		Center Bearing Support	538623
	2006.10-2013.12		Centre	SUV 4WD G6BA		Center Bearing Support Kit	538687S
INFINITI							
FX35							
3.5 (206 kw)	2003.01-2008.12	AT	Front	SUV 4WD VQ35DE		Propshaft	PS900274
	2003.01-2008.12		Centre	SUV 4WD VQ35DE		Center Bearing Support Kit	538683S
3.5 (226 kw)	2009.09-2013.07	7AT	Front	SUV 4WD VQ35HR		Propshaft	PS900275
3.5 (244 kw)	2010.04-2012.12	7AT	Front	SUV 4WD VQ35HR		Propshaft	PS900275
FX37							
3.7 (235 kw)	2008.10-2013.07	7AT	Front	SUV 4WD VQ37VHR	Model year from:2009,Model year to:2012	Propshaft	PS900275
FX45							
4.5 (232 kw)	2003.01-2008.10	AT	Front	SUV 4WD VK45DE		Propshaft	PS900274
	2003.01-2008.10		Centre	SUV 4WD VK45DE		Center Bearing Support Kit	538683S
G35							
3.5 (228 kw)	2007.01-2008.12	AT	Front	Saloon 4WD VQ35HR		Propshaft	PS900274
G37							
3.7 (235 kw)	2008.10-	7AT	Front	Saloon 4WD VQ37VHR	Model year from:2009,Model year to:2013	Propshaft	PS900275
3.7 (245 kw)	2008.12-	7AT	Front	Saloon 4WD VQ37VHR	Model year from:2009	Propshaft	PS900275
M35							
3.5 (206 kw)	2005.01-2008.08	AT	Front	Saloon 4WD VQ35DE	Model year from:2006,Model year to:2010	Propshaft	PS900274
3.5 (226 kw)	2008.09-2010.12	AT	Front	Saloon 4WD VQ35HR		Propshaft	PS900274
M37							
3.7 (246 kw)	2010.01-	7AT	Front	Saloon 4WD VQ37VHR	Model year to:2013	Propshaft	PS900275
Q45							
4.1 (205 kw)	1996.07-2001.01		Centre	Saloon RWD VH41DE		Center Bearing Support Kit	538683S
Q70							
3.7 (245 kw)	2014.01-	7AT	Front	Saloon 4WD VQ37VHR	Model year to:2017	Propshaft	PS900275
QX4							
3.5 (179 kw)	2000.01-2003.12		Rear	Terrain cab wagon closed 4WD VQ35DE		Joint,propshaft	801298
QX50							
3.7 (258 kw)	2013.08-	7AT	Front	SUV 4WD VQ37VHR	Model year from:2014,Model year to:2017	Propshaft	PS900275
QX56							
5.6 (239 kw)	2003.09-2010.12	5AT	Front	SUV 4WD VK56DE	Model year from:2008	Propshaft	PS901594
5.6 (324 kw)	2010.09-2013.09	AT	Front	SUV 4WD VK56VD		Propshaft	PS901595
QX70							
3.7 (235 kw)	2013.08-	7AT	Front	SUV 4WD VQ37VHR	Model year from:2014,Model year to:2017	Propshaft	PS900275

	YEAR	TRANSM.	FITTING POSITION	BODY STYLE & DRIVE TYPE & ENGINE	REMARKS	PRODUCT	GSP Ref.
ISUZU							
Ascender							
4.2 (217 kw)	2003.03-2007.09		Front	SUV 4WD LL8(254CUL6)	Model year to:2008	Propshaft	PS900188
	2003.03-2007.09		Front	SUV 4WD LL8(254CUL6)	RPO Code:NP8	Joint,propshaft	608073
D-Max							
2.5 (120 kw)	2012.04-2018.12		Centre	Pickup 4WD 4JK1TCY		Center Bearing Support	539044
3.0 (96 kw)	2002.10-2012.06		Centre	Pickup 4WD 4JH1TC		Center Bearing Support	539044
Pickup							
2.5 (62 kw)	1996.07-2002.12		Centre	Pickup 4WD 4JA1T		Center Bearing Support	539043
Rodeo							
2.5 (74 kw)	2002.05-2006.09		Centre	Pickup 4WD 4JA1TC		Center Bearing Support	539044
3.0 (96 kw)	2002.05-2007.06		Centre	Pickup 4WD 4JH1TC		Center Bearing Support	539044
IVECO							
60 E 14 K tector							
3.922 (103 kw)	2006.09-2015.09		Front	Dump Truck 4x2 F4AE3481C (09.06-.)		Center Bearing Support	539037
60 E 14 tector, 60 E 14 P tector							
3.922 (103 kw)	2006.09-2015.09		Front	Platform/Chassis 4x2 F4AE3481C (09.06-.)		Center Bearing Support	539037
65 E 14 K tector							
3.922 (103 kw)	2006.09-2015.09		Front	Dump Truck 4x2 F4AE3481C (09.06-.)		Center Bearing Support	539037
65 E 14 tector, 65 E 14 P tector							
3.922 (103 kw)	2006.09-2015.09		Front	Platform/Chassis 4x2 F4AE3481C (09.06-.)		Center Bearing Support	539037
75 E 14 K tector							
3.922 (103 kw)	2006.09-2015.09		Front	Dump Truck 4x2 F4AE3481C (09.06-.)		Center Bearing Support	539037
80 E 18 K tector							
3.922 (130 kw)	2006.09-2015.09		Front	Dump Truck 4x2 F4AE3481B (09.06-.)		Center Bearing Support	539037
80 E 18 K tector, 80 E 18 DK tector							
5.883 (134 kw)	2000.09-2015.09		Front	Dump Truck 4x2 F4AE0681E (09.00-.)		Center Bearing Support	539037
80 E 18 tector, 80 E 18 P tector, 80 E 18 FP tector							
3.922 (130 kw)	2006.09-2015.09		Front	Platform/Chassis 4x2 F4AE3481B (09.06-.)		Center Bearing Support	539037
80 E 21 K, 80 E 21 DK tector, 80 E 22 K tector							
5.883 (154-160 kw)	2000.09-2015.09		Front	Dump Truck 4x2 F4AE0681D (09.00-.), F4AE3681B (05.06-.)		Center Bearing Support	539037
Daily 29L11							
2.3 (78 kw)	2011.09-2014.02		Front	Chassis Cabin RWD F1AE3481A		Center Bearing Support	539037
Daily 29L15							
2.3 (107 kw)	2011.09-2014.02		Centre	Chassis Cabin RWD F1AE3481C		Center Bearing Support	539036
Daily 29L15P							
2.3 (107 kw)	2011.09-2014.02		Centre	Chassis Cabin RWD F1AE3481C		Center Bearing Support	539036
Daily 29S11							
2.3 (78 kw)	2011.09-2014.02		Front	Chassis Cabin RWD F1AE3481A		Center Bearing Support	539037
Daily 30.10							
2.5 (76 kw)	1990.01-1996.01		Front	Van RWD 8140.27 S		Center Bearing Support	539037
2.8 (76 kw)	1997.01-1999.05		Front	Van RWD 8140.23		Center Bearing Support	539037
	1998.01-1999.05		Front	Platform/Chassis RWD 8140.23		Center Bearing Support	539037
Daily 30.8							
2.5 (55 kw)	1989.01-1998.08		Front	Van RWD 8140.07		Center Bearing Support	539037
	1992.01-1998.08		Front	Platform/Chassis RWD 8140.07		Center Bearing Support	539037
2.5 (60 kw)	1989.01-1998.08		Front	Van RWD 8140.67F.		Center Bearing Support	539037
	1992.01-1998.08		Front	Platform/Chassis RWD 8140.67F.		Center Bearing Support	539037
Daily 33S11							
2.3 (78 kw)	2014.03-2021.07		Front	Chassis Cabin RWD F1AFL411A		Center Bearing Support	539037
	2014.03-2021.07		Centre	Chassis Cabin RWD F1AFL411A		Center Bearing Support Kit	539924S
	2014.03-2021.07		Centre	Van RWD F1AFL411A		Center Bearing Support Kit	539924S
Daily 33S13							
2.3 (93 kw)	2014.03-		Centre	Chassis Cabin RWD F1AFL411B		Center Bearing Support Kit	539924S
	2014.03-		Centre	Van RWD F1AFL411B		Center Bearing Support Kit	539924S
Daily 33S13P							
2.3 (93 kw)	2014.03-		Centre	Chassis Cabin RWD F1AFL411B		Center Bearing Support Kit	539924S
	2014.03-		Centre	Van RWD F1AFL411B		Center Bearing Support Kit	539924S
Daily 33S15							
2.3 (107 kw)	2014.03-		Centre	Chassis Cabin RWD F1AFL411C		Center Bearing Support Kit	539924S
	2014.03-		Centre	Van RWD F1AFL411C		Center Bearing Support Kit	539924S
Daily 33S15P							
2.3 (107 kw)	2014.03-		Centre	Chassis Cabin RWD F1AFL411C		Center Bearing Support Kit	539924S
	2014.03-		Centre	Van RWD F1AFL411C		Center Bearing Support Kit	539924S

	YEAR	TRANSM.	FITTING POSITION	BODY STYLE & DRIVE TYPE & ENGINE	REMARKS	PRODUCT	GSP Ref.
IVECO							
Daily 35.10							
2.5 (76 kw)	1989.01-1996.12		Front	Platform/Chassis RWD 8140.97		Center Bearing Support	539037
	1989.01-1998.08		Front	Van RWD 8140.97		Center Bearing Support	539037
2.5 (80 kw)	1989.01-1998.08		Front	Van RWD 8140.47R		Center Bearing Support	539037
2.8 (76 kw)	1996.01-1999.05		Front	Platform/Chassis RWD 8140.23		Center Bearing Support	539037
	1996.01-1999.05		Front	Van RWD 8140.23		Center Bearing Support	539037
Daily 35.12							
2.5 (85 kw)	1990.01-1996.04		Front	Van RWD 8140.47, 8140.47S		Center Bearing Support	539037
	1990.01-1996.04		Front	Platform/Chassis RWD 8140.47, 8140.47S		Center Bearing Support	539037
2.8 (90 kw)	1995.02-1999.05		Front	Van RWD 8140.43.		Center Bearing Support	539037
	1996.05-1999.05		Front	Platform/Chassis RWD 8140.43.		Center Bearing Support	539037
Daily 35.8							
2.5 (55 kw)	1989.01-1998.08		Front	Platform/Chassis RWD 8140.07		Center Bearing Support	539037
	1991.01-1998.08		Front	Van RWD 8140.07		Center Bearing Support	539037
2.5 (60 kw)	1989.01-1998.08		Front	Platform/Chassis RWD 8140.67F.		Center Bearing Support	539037
	1991.01-1998.08		Front	Van RWD 8140.67F.		Center Bearing Support	539037
2.8 (62 kw)	1998.09-1999.05		Front	Platform/Chassis RWD 8140.63		Center Bearing Support	539037
	1998.09-1999.05		Front	Van RWD 8140.63		Center Bearing Support	539037
Daily 35C10							
2.3 (70 kw)	2006.06-2011.08		Front	Chassis Cabin RWD F1AE0481F		Center Bearing Support	539037
Daily 35C11							
2.3 (78 kw)	2011.09-2014.02		Front	Chassis Cabin RWD F1AE3481A		Center Bearing Support	539037
	2014.03-2021.07		Front	Chassis Cabin RWD F1AFL411A		Center Bearing Support	539037
	2014.03-2021.07		Centre	Chassis Cabin RWD F1AFL411A		Center Bearing Support Kit	539924S
	2014.03-2021.07		Centre	Van RWD F1AFL411A		Center Bearing Support Kit	539924S
2.8 (78 kw)	1999.07-2006.12		Front	Chassis Cabin RWD 814043B/814043C		Center Bearing Support	539037
	1999.07-2006.12		Front	Van RWD 814043B/814043C		Center Bearing Support	539037
	1999.07-2006.12		Centre	Chassis Cabin RWD 814043B/814043C		Center Bearing Support	539036
	1999.07-2006.12		Centre	Van RWD 814043B/814043C		Center Bearing Support	539036
Daily 35C11P							
2.8 (78 kw)	1999.07-2006.12		Front	Chassis Cabin RWD 814043B/814043C		Center Bearing Support	539037
	1999.07-2006.12		Front	Van RWD 814043B/814043C		Center Bearing Support	539037
	1999.07-2006.12		Centre	Chassis Cabin RWD 814043B/814043C		Center Bearing Support	539036
	1999.07-2006.12		Centre	Van RWD 814043B/814043C		Center Bearing Support	539036
Daily 35C12							
2.3 (85 kw)	1999.07-2006.12		Front	Van RWD F1AE0481B		Center Bearing Support	539037
	1999.07-2006.12		Front	Chassis Cabin RWD F1AE0481B		Center Bearing Support	539037
	2006.06-2011.08		Front	Chassis Cabin RWD F1AE0481G		Center Bearing Support	539037
	2016.04-		Centre	Van RWD F1AGL411C/F1AGL411H/F1AGL411X		Center Bearing Support Kit	539924S
	2016.04-		Centre	Chassis Cabin RWD F1AGL411C/F1AGL411H/F1AGL411X		Center Bearing Support Kit	539924S
Daily 35C12P							
2.3 (85 kw)	1999.07-2006.12		Front	Chassis Cabin RWD F1AE0481B		Center Bearing Support	539037
	1999.07-2006.12		Front	Van RWD F1AE0481B		Center Bearing Support	539037
	2006.06-2011.08		Front	Chassis Cabin RWD F1AE0481G		Center Bearing Support	539037
Daily 35C13							
2.3 (93 kw)	2009.09-2011.08		Front	Chassis Cabin RWD F1AE0481V		Center Bearing Support	539037
	2009.09-2011.08		Front	Van RWD F1AE0481V		Center Bearing Support	539037
	2009.09-2011.08		Centre	Chassis Cabin RWD F1AE0481V		Center Bearing Support	539036
	2009.09-2011.08		Centre	Van RWD F1AE0481V		Center Bearing Support	539036
	2014.03-		Centre	Chassis Cabin RWD F1AFL411B		Center Bearing Support Kit	539924S
	2014.03-		Centre	Van RWD F1AFL411B		Center Bearing Support Kit	539924S
Daily 35C13P							
2.3 (93 kw)	2009.09-2011.08		Front	Chassis Cabin RWD F1AE0481V		Center Bearing Support	539037
	2009.09-2011.08		Front	Van RWD F1AE0481V		Center Bearing Support	539037
	2009.09-2011.08		Centre	Chassis Cabin RWD F1AE0481V		Center Bearing Support	539036
	2009.09-2011.08		Centre	Van RWD F1AE0481V		Center Bearing Support	539036
	2014.03-		Centre	Chassis Cabin RWD F1AFL411B		Center Bearing Support Kit	539924S
	2014.03-		Centre	Van RWD F1AFL411B		Center Bearing Support Kit	539924S
Daily 35C14							
2.3 (100 kw)	2016.04-		Centre	Chassis Cabin RWD F1AGL411B/F1AGL411D/F1AGL411J/F1AGL411R/F1AGL411Y		Center Bearing Support Kit	539924S
3.0 (100 kw)	2014.03-		Centre	Chassis Cabin RWD F1CFA401A/F1CFA401C/F1CFA401D		Center Bearing Support Kit	539924S
	2014.03-		Centre	Van RWD F1CFA401A/F1CFA401C/F1CFA401D		Center Bearing Support Kit	539924S
	2014.03-		Front;Rear	Chassis Cabin RWD F1CFA401A/F1CFA401C/F1CFA401D		Flexible Coupling	533884
	2014.03-		Front;Rear	Van RWD F1CFA401A/F1CFA401C/F1CFA401D		Flexible Coupling	533884
	2014.03-		Front	Chassis Cabin RWD F1CFA401A/F1CFA401C/F1CFA401D		Flexible Coupling Kit	538522S

	YEAR	TRANSM.	FITTING POSITION	BODY STYLE & DRIVE TYPE & ENGINE	REMARKS	PRODUCT	GSP Ref.
IVECO							
Daily 35C14							
3.0 (100 kw)	2014.03-		Front	Van RWD F1CFA401A/F1CFA401C/F1CFA401D		Flexible Coupling Kit	538522S
Daily 35C14P							
3.0 (100 kw)	2014.03-		Centre	Chassis Cabin RWD F1CFA401A/F1CFA401C/F1CFA401D		Center Bearing Support Kit	539924S
	2014.03-		Centre	Van RWD F1CFA401A/F1CFA401C/F1CFA401D		Center Bearing Support Kit	539924S
	2014.03-		Front;Rear	Chassis Cabin RWD F1CFA401A/F1CFA401C/F1CFA401D		Flexible Coupling	533884
	2014.03-		Front;Rear	Van RWD F1CFA401A/F1CFA401C/F1CFA401D		Flexible Coupling	533884
	2014.03-		Front	Chassis Cabin RWD F1CFA401A/F1CFA401C/F1CFA401D		Flexible Coupling Kit	538522S
	2014.03-		Front	Van RWD F1CFA401A/F1CFA401C/F1CFA401D		Flexible Coupling Kit	538522S
Daily 35C15							
2.3 (107 kw)	2011.09-2014.02		Centre	Chassis Cabin RWD F1AE3481C		Center Bearing Support	539036
	2014.03-		Centre	Chassis Cabin RWD F1AFL411C		Center Bearing Support Kit	539924S
	2014.03-		Centre	Van RWD F1AFL411C		Center Bearing Support Kit	539924S
3.0 (107 kw)	2006.06-2011.08		Centre	Chassis Cabin RWD F1CE0481F	Installation size:174mm	Center Bearing Support	539036
	2006.06-2011.08		Centre	Van RWD F1CE0481F	Installation size:174mm	Center Bearing Support	539036
	2011.09-2014.02		Centre	Chassis Cabin RWD F1CE3481B/F1CE3481J	Installation size:174mm	Center Bearing Support	539036
	2011.09-2014.02		Centre	Van RWD F1CE3481B/F1CE3481J	Installation size:174mm	Center Bearing Support	539036
	2014.03-		Centre	Chassis Cabin RWD F1CE3481J/F1CFL411E/F1CFL411J		Center Bearing Support Kit	539924S
	2014.03-		Centre	Van RWD F1CE3481J/F1CFL411E/F1CFL411J		Center Bearing Support Kit	539924S
	2014.03-		Front;Rear	Chassis Cabin RWD F1CE3481J/F1CFL411E/F1CFL411J		Flexible Coupling	533884
	2014.03-		Front;Rear	Van RWD F1CE3481J/F1CFL411E/F1CFL411J		Flexible Coupling	533884
	2014.03-		Front	Chassis Cabin RWD F1CE3481J/F1CFL411E/F1CFL411J		Flexible Coupling Kit	538522S
	2014.03-		Front	Van RWD F1CE3481J/F1CFL411E/F1CFL411J		Flexible Coupling Kit	538522S
3.0 (110 kw)	2016.04-		Centre	Chassis Cabin RWD F1CFL411V/F1CGL411A		Center Bearing Support Kit	539924S
	2016.04-		Centre	Van RWD F1CFL411V/F1CGL411A		Center Bearing Support Kit	539924S
	2016.04-		Front;Rear	Chassis Cabin RWD F1CFL411V/F1CGL411A		Flexible Coupling	533884
	2016.04-		Front;Rear	Van RWD F1CFL411V/F1CGL411A		Flexible Coupling	533884
	2016.04-		Front	Chassis Cabin RWD F1CFL411V/F1CGL411A		Flexible Coupling Kit	538522S
	2016.04-		Front	Van RWD F1CFL411V/F1CGL411A		Flexible Coupling Kit	538522S
Daily 35C15P							
2.3 (107 kw)	2011.09-2014.02		Centre	Chassis Cabin RWD F1AE3481C		Center Bearing Support	539036
	2014.03-		Centre	Chassis Cabin RWD F1AFL411C		Center Bearing Support Kit	539924S
	2014.03-		Centre	Van RWD F1AFL411C		Center Bearing Support Kit	539924S
3.0 (107 kw)	2006.06-2011.08		Centre	Chassis Cabin RWD F1CE0481F	Installation size:174mm	Center Bearing Support	539036
	2006.06-2011.08		Centre	Van RWD F1CE0481F	Installation size:174mm	Center Bearing Support	539036
	2011.09-2014.02		Centre	Chassis Cabin RWD F1CE3481B/F1CE3481J	Installation size:174mm	Center Bearing Support	539036
	2011.09-2014.02		Centre	Van RWD F1CE3481B/F1CE3481J	Installation size:174mm	Center Bearing Support	539036
	2014.03-		Centre	Chassis Cabin RWD F1CFL411E/F1CFL411J		Center Bearing Support Kit	539924S
	2014.03-		Centre	Van RWD F1CFL411E/F1CFL411J		Center Bearing Support Kit	539924S
	2014.03-		Front;Rear	Chassis Cabin RWD F1CFL411E/F1CFL411J		Flexible Coupling	533884
	2014.03-		Front;Rear	Van RWD F1CFL411E/F1CFL411J		Flexible Coupling	533884
	2014.03-		Front	Chassis Cabin RWD F1CFL411E/F1CFL411J		Flexible Coupling Kit	538522S
	2014.03-		Front	Van RWD F1CFL411E/F1CFL411J		Flexible Coupling Kit	538522S
Daily 35C16							
2.3 (115 kw)	2016.04-		Centre	Van RWD F1AGL411A/F1AGL411B/F1AGL411G/F1AGL411N/F1AGL411U		Center Bearing Support Kit	539924S
	2016.04-		Centre	Chassis Cabin RWD F1AGL411A/F1AGL411B/F1AGL411G/F1AGL411N/F1AGL411U		Center Bearing Support Kit	539924S
Daily 35C17							
3.0 (125 kw)	2014.03-		Centre	Chassis Cabin RWD F1CFL411F/F1CFL411H		Center Bearing Support Kit	539924S
	2014.03-		Centre	Van RWD F1CFL411F/F1CFL411H		Center Bearing Support Kit	539924S
	2014.03-		Front;Rear	Chassis Cabin RWD F1CFL411F/F1CFL411H		Flexible Coupling	533884
	2014.03-		Front;Rear	Van RWD F1CFL411F/F1CFL411H		Flexible Coupling	533884
	2014.03-		Front	Chassis Cabin RWD F1CFL411F/F1CFL411H		Flexible Coupling Kit	538522S
	2014.03-		Front	Van RWD F1CFL411F/F1CFL411H		Flexible Coupling Kit	538522S
Daily 35C17P							
3.0 (125 kw)	2014.03-		Centre	Chassis Cabin RWD F1CFL411F/F1CFL411H		Center Bearing Support Kit	539924S
	2014.03-		Centre	Van RWD F1CFL411F/F1CFL411H		Center Bearing Support Kit	539924S
	2014.03-		Front;Rear	Chassis Cabin RWD F1CFL411F/F1CFL411H		Flexible Coupling	533884
	2014.03-		Front;Rear	Van RWD F1CFL411F/F1CFL411H		Flexible Coupling	533884
	2014.03-		Front	Chassis Cabin RWD F1CFL411F/F1CFL411H		Flexible Coupling Kit	538522S
	2014.03-		Front	Van RWD F1CFL411F/F1CFL411H		Flexible Coupling Kit	538522S
Daily 35C18							
3.0 (132 kw)	2016.04-		Centre	Van RWD F1CFL4117/F1CFL411W/F1CGL411B		Center Bearing Support Kit	539924S
	2016.04-		Centre	Chassis Cabin RWD F1CFL4117/F1CFL411W/F1CGL411B		Center Bearing Support Kit	539924S
	2016.04-		Front;Rear	Van RWD F1CFL4117/F1CFL411W/F1CGL411B		Flexible Coupling	533884
	2016.04-		Front;Rear	Chassis Cabin RWD F1CFL4117/F1CFL411W/F1CGL411B		Flexible Coupling	533884

	YEAR	TRANSM.	FITTING POSITION	BODY STYLE & DRIVE TYPE & ENGINE	REMARKS	PRODUCT	GSP Ref.
IVECO							
Daily 35C18							
3.0 (132 kw)	2016.04-		Front	Van RWD F1CFL4117/F1CFL411W/F1CGL411B		Flexible Coupling Kit	538522S
	2016.04-		Front	Chassis Cabin RWD F1CFL4117/F1CFL411W/F1CGL411B		Flexible Coupling Kit	538522S
Daily 35C18P							
3.0 (132 kw)	2016.04-		Centre	Chassis Cabin RWD F1CFL4117/F1CFL411W/F1CGL411B		Center Bearing Support Kit	539924S
	2016.04-		Centre	Van RWD F1CFL4117/F1CFL411W/F1CGL411B		Center Bearing Support Kit	539924S
	2016.04-		Front;Rear	Chassis Cabin RWD F1CFL4117/F1CFL411W/F1CGL411B		Flexible Coupling	533884
	2016.04-		Front;Rear	Van RWD F1CFL4117/F1CFL411W/F1CGL411B		Flexible Coupling	533884
	2016.04-		Front	Chassis Cabin RWD F1CFL4117/F1CFL411W/F1CGL411B		Flexible Coupling Kit	538522S
	2016.04-		Front	Van RWD F1CFL4117/F1CFL411W/F1CGL411B		Flexible Coupling Kit	538522S
Daily 35C21							
3.0 (150 kw)	2014.03-		Centre	Chassis Cabin RWD F1CFL411G/F1CGL411C		Center Bearing Support Kit	539924S
	2014.03-		Centre	Van RWD F1CFL411G/F1CGL411C		Center Bearing Support Kit	539924S
	2014.03-		Front;Rear	Chassis Cabin RWD F1CFL411G/F1CGL411C		Flexible Coupling	533884
	2014.03-		Front;Rear	Van RWD F1CFL411G/F1CGL411C		Flexible Coupling	533884
	2014.03-		Front	Chassis Cabin RWD F1CFL411G/F1CGL411C		Flexible Coupling Kit	538522S
	2014.03-		Front	Van RWD F1CFL411G/F1CGL411C		Flexible Coupling Kit	538522S
Daily 35C21P							
3.0 (150 kw)	2014.03-		Centre	Chassis Cabin RWD F1CFL411G/F1CGL411C		Center Bearing Support Kit	539924S
	2014.03-		Centre	Van RWD F1CFL411G/F1CGL411C		Center Bearing Support Kit	539924S
	2014.03-		Front;Rear	Chassis Cabin RWD F1CFL411G/F1CGL411C		Flexible Coupling	533884
	2014.03-		Front;Rear	Van RWD F1CFL411G/F1CGL411C		Flexible Coupling	533884
	2014.03-		Front	Chassis Cabin RWD F1CFL411G/F1CGL411C		Flexible Coupling Kit	538522S
	2014.03-		Front	Van RWD F1CFL411G/F1CGL411C		Flexible Coupling Kit	538522S
Daily 35S10							
2.3 (70 kw)	2006.06-2011.08		Front	Chassis Cabin RWD F1AE0481F		Center Bearing Support	539037
Daily 35S11							
2.3 (78 kw)	2011.09-2014.02		Front	Chassis Cabin RWD F1AE3481A		Center Bearing Support	539037
	2014.03-2021.07		Front	Chassis Cabin RWD F1AFL411A		Center Bearing Support	539037
	2014.03-2021.07		Centre	Chassis Cabin RWD F1AFL411A		Center Bearing Support Kit	539924S
	2014.03-2021.07		Centre	Van RWD F1AFL411A		Center Bearing Support Kit	539924S
2.8 (78 kw)	1999.07-2006.12		Front	Chassis Cabin RWD 814043B/814043C		Center Bearing Support	539037
	1999.07-2006.12		Front	Van RWD 814043B/814043C		Center Bearing Support	539037
	1999.07-2006.12		Centre	Chassis Cabin RWD 814043B/814043C		Center Bearing Support	539036
	1999.07-2006.12		Centre	Van RWD 814043B/814043C		Center Bearing Support	539036
Daily 35S11P							
2.3 (78 kw)	2011.09-2014.02		Front	Chassis Cabin RWD F1AE3481A		Center Bearing Support	539037
	2014.03-2021.07		Front	Chassis Cabin RWD F1AFL411A		Center Bearing Support	539037
	2014.03-2021.07		Centre	Chassis Cabin RWD F1AFL411A		Center Bearing Support Kit	539924S
2.8 (78 kw)	1999.07-2006.12		Front	Chassis Cabin RWD 814043B/814043C		Center Bearing Support	539037
	1999.07-2006.12		Front	Van RWD 814043B/814043C		Center Bearing Support	539037
	1999.07-2006.12		Centre	Chassis Cabin RWD 814043B/814043C		Center Bearing Support	539036
	1999.07-2006.12		Centre	Van RWD 814043B/814043C		Center Bearing Support	539036
Daily 35S12							
2.3 (85 kw)	1999.06-2006.05		Front	Bus RWD F1AE0481B		Center Bearing Support	539037
	1999.07-2006.12		Front	Van RWD F1AE0481B		Center Bearing Support	539037
	1999.07-2006.12		Front	Chassis Cabin RWD F1AE0481B		Center Bearing Support	539037
	2006.06-2011.08		Front	Chassis Cabin RWD F1AE0481G		Center Bearing Support	539037
	2016.04-		Centre	Chassis Cabin RWD F1AGL411C/F1AGL411H/F1AGL411X		Center Bearing Support Kit	539924S
	2016.04-		Centre	Van RWD F1AGL411C/F1AGL411H/F1AGL411X		Center Bearing Support Kit	539924S
Daily 35S12P							
2.3 (85 kw)	1999.07-2006.12		Front	Chassis Cabin RWD F1AE0481B		Center Bearing Support	539037
	1999.07-2006.12		Front	Van RWD F1AE0481B		Center Bearing Support	539037
	2006.06-2009.08		Front	Chassis Cabin RWD F1AE0481G		Center Bearing Support	539037
	2016.04-		Centre	Chassis Cabin RWD F1AGL411H/F1AGL411X		Center Bearing Support Kit	539924S
Daily 35S13							
2.3 (93 kw)	2009.09-2011.08		Front	Chassis Cabin RWD F1AE0481V		Center Bearing Support	539037
	2009.09-2011.08		Front	Van RWD F1AE0481V		Center Bearing Support	539037
	2009.09-2011.08		Centre	Chassis Cabin RWD F1AE0481V		Center Bearing Support	539036
	2009.09-2011.08		Centre	Van RWD F1AE0481V		Center Bearing Support	539036
	2014.03-		Centre	Chassis Cabin RWD F1AFL411B		Center Bearing Support Kit	539924S
	2014.03-		Centre	Van RWD F1AFL411B		Center Bearing Support Kit	539924S
Daily 35S13P							
2.3 (93 kw)	2009.09-2011.08		Front	Chassis Cabin RWD F1AE0481V		Center Bearing Support	539037
	2009.09-2011.08		Front	Van RWD F1AE0481V		Center Bearing Support	539037

	YEAR	TRANSM.	FITTING POSITION	BODY STYLE & DRIVE TYPE & ENGINE	REMARKS	PRODUCT	GSP Ref.
IVECO							
Daily 35S13P							
2.3 (93 kw)	2009.09-2011.08		Centre	Chassis Cabin RWD F1AE0481V		Center Bearing Support	539036
	2009.09-2011.08		Centre	Van RWD F1AE0481V		Center Bearing Support	539036
	2014.03-		Centre	Chassis Cabin RWD F1AFL411B		Center Bearing Support Kit	539924S
	2014.03-		Centre	Van RWD F1AFL411B		Center Bearing Support Kit	539924S
Daily 35S14							
2.3 (100 kw)	2016.04-		Centre	Chassis Cabin RWD F1AGL411B/F1AGL411D/F1AGL411J/F1AGL411R/F1AGL411Y		Center Bearing Support Kit	539924S
3.0 (100 kw)	2014.03-		Centre	Chassis Cabin RWD F1CFA401A/F1CFA401C/F1CFA401D		Center Bearing Support Kit	539924S
	2014.03-		Centre	Van RWD F1CFA401A/F1CFA401C/F1CFA401D		Center Bearing Support Kit	539924S
	2014.03-		Front;Rear	Chassis Cabin RWD F1CFA401A/F1CFA401C/F1CFA401D		Flexible Coupling	533884
	2014.03-		Front;Rear	Van RWD F1CFA401A/F1CFA401C/F1CFA401D		Flexible Coupling	533884
	2014.03-		Front	Chassis Cabin RWD F1CFA401A/F1CFA401C/F1CFA401D		Flexible Coupling Kit	538522S
	2014.03-		Front	Van RWD F1CFA401A/F1CFA401C/F1CFA401D		Flexible Coupling Kit	538522S
Daily 35S14P							
2.3 (100 kw)	2016.04-		Centre	Chassis Cabin RWD F1AGL411B/F1AGL411D/F1AGL411J/F1AGL411R/F1AGL411Y		Center Bearing Support Kit	539924S
3.0 (100 kw)	2014.03-		Centre	Chassis Cabin RWD F1CFA401A/F1CFA401C/F1CFA401D		Center Bearing Support Kit	539924S
	2014.03-		Centre	Van RWD F1CFA401A/F1CFA401C/F1CFA401D		Center Bearing Support Kit	539924S
	2014.03-		Front;Rear	Chassis Cabin RWD F1CFA401A/F1CFA401C/F1CFA401D		Flexible Coupling	533884
	2014.03-		Front;Rear	Van RWD F1CFA401A/F1CFA401C/F1CFA401D		Flexible Coupling	533884
	2014.03-		Front	Chassis Cabin RWD F1CFA401A/F1CFA401C/F1CFA401D		Flexible Coupling Kit	538522S
	2014.03-		Front	Van RWD F1CFA401A/F1CFA401C/F1CFA401D		Flexible Coupling Kit	538522S
Daily 35S15							
2.3 (107 kw)	2011.09-2014.02		Centre	Chassis Cabin RWD F1AE3481C		Center Bearing Support	539036
	2014.03-		Centre	Chassis Cabin RWD F1AFL411C		Center Bearing Support Kit	539924S
	2014.03-		Centre	Van RWD F1AFL411C		Center Bearing Support Kit	539924S
3.0 (107 kw)	2011.09-2014.02		Centre	Chassis Cabin RWD F1CE3481B/F1CE3481J	Installation size:174mm	Center Bearing Support	539036
	2011.09-2014.02		Centre	Van RWD F1CE3481J	Installation size:174mm	Center Bearing Support	539036
	2014.03-		Centre	Chassis Cabin RWD F1CE3481J/F1CFL411E/F1CFL411J		Center Bearing Support Kit	539924S
	2014.03-		Centre	Van RWD F1CE3481J/F1CFL411E/F1CFL411J		Center Bearing Support Kit	539924S
	2014.03-		Front;Rear	Chassis Cabin RWD F1CE3481J/F1CFL411E/F1CFL411J		Flexible Coupling	533884
	2014.03-		Front;Rear	Van RWD F1CE3481J/F1CFL411E/F1CFL411J		Flexible Coupling	533884
	2014.03-		Front	Chassis Cabin RWD F1CE3481J/F1CFL411E/F1CFL411J		Flexible Coupling Kit	538522S
	2014.03-		Front	Van RWD F1CE3481J/F1CFL411E/F1CFL411J		Flexible Coupling Kit	538522S
Daily 35S15P							
2.3 (107 kw)	2011.09-2014.02		Centre	Chassis Cabin RWD F1AE3481C		Center Bearing Support	539036
	2014.03-		Centre	Chassis Cabin RWD F1AFL411C		Center Bearing Support Kit	539924S
	2014.03-		Centre	Van RWD F1AFL411C		Center Bearing Support Kit	539924S
3.0 (107 kw)	2011.09-2014.02		Centre	Chassis Cabin RWD F1CE3481B	Installation size:174mm	Center Bearing Support	539036
	2014.03-		Centre	Chassis Cabin RWD F1CFL411E/F1CFL411J		Center Bearing Support Kit	539924S
	2014.03-		Centre	Van RWD F1CFL411E/F1CFL411J		Center Bearing Support Kit	539924S
	2014.03-		Front;Rear	Chassis Cabin RWD F1CFL411E/F1CFL411J		Flexible Coupling	533884
	2014.03-		Front;Rear	Van RWD F1CFL411E/F1CFL411J		Flexible Coupling	533884
	2014.03-		Front	Chassis Cabin RWD F1CFL411E/F1CFL411J		Flexible Coupling Kit	538522S
	2014.03-		Front	Van RWD F1CFL411E/F1CFL411J		Flexible Coupling Kit	538522S
Daily 35S15W							
3.0 (107 kw)	2014.03-		Front	Chassis Cabin 4WD F1CE3481J		Flexible Coupling Kit	538522S
Daily 35S16							
2.3 (115 kw)	2016.04-		Centre	Chassis Cabin RWD F1AGL411A/F1AGL411B/F1AGL411G/F1AGL411N/F1AGL411U		Center Bearing Support Kit	539924S
	2016.04-		Centre	Van RWD F1AGL411A/F1AGL411B/F1AGL411G/F1AGL411N/F1AGL411U		Center Bearing Support Kit	539924S
Daily 35S17							
3.0 (125 kw)	2014.03-		Centre	Chassis Cabin RWD F1CFL411F/F1CFL411H		Center Bearing Support Kit	539924S
	2014.03-		Centre	Van RWD F1CFL411F/F1CFL411H		Center Bearing Support Kit	539924S
	2014.03-		Front;Rear	Chassis Cabin RWD F1CFL411F/F1CFL411H		Flexible Coupling	533884
	2014.03-		Front;Rear	Van RWD F1CFL411F/F1CFL411H		Flexible Coupling	533884
	2014.03-		Front	Chassis Cabin RWD F1CFL411F/F1CFL411H		Flexible Coupling Kit	538522S
	2014.03-		Front	Van RWD F1CFL411F/F1CFL411H		Flexible Coupling Kit	538522S
Daily 35S17P							
3.0 (125 kw)	2014.03-		Centre	Chassis Cabin RWD F1CFL411F/F1CFL411H		Center Bearing Support Kit	539924S
	2014.03-		Centre	Van RWD F1CFL411F/F1CFL411H		Center Bearing Support Kit	539924S
	2014.03-		Front;Rear	Chassis Cabin RWD F1CFL411F/F1CFL411H		Flexible Coupling	533884
	2014.03-		Front;Rear	Van RWD F1CFL411F/F1CFL411H		Flexible Coupling	533884
	2014.03-		Front	Chassis Cabin RWD F1CFL411F/F1CFL411H		Flexible Coupling Kit	538522S
	2014.03-		Front	Van RWD F1CFL411F/F1CFL411H		Flexible Coupling Kit	538522S

	YEAR	TRANSM.	FITTING POSITION	BODY STYLE & DRIVE TYPE & ENGINE	REMARKS	PRODUCT	GSP Ref.
IVECO							
Daily 35S17W							
3.0 (125 kw)	2014.03-		Front	Chassis Cabin 4WD F1CFL411F		Flexible Coupling Kit	538522S
Daily 35S18							
3.0 (132 kw)	2016.04-		Centre	Van RWD F1CFL4117/F1CFL411W/F1CGL411B		Center Bearing Support Kit	539924S
	2016.04-		Centre	Chassis Cabin RWD F1CFL4117/F1CFL411W/F1CGL411B		Center Bearing Support Kit	539924S
	2016.04-		Front;Rear	Van RWD F1CFL4117/F1CFL411W/F1CGL411B		Flexible Coupling	533884
	2016.04-		Front;Rear	Chassis Cabin RWD F1CFL4117/F1CFL411W/F1CGL411B		Flexible Coupling	533884
	2016.04-		Front	Van RWD F1CFL4117/F1CFL411W/F1CGL411B		Flexible Coupling Kit	538522S
	2016.04-		Front	Chassis Cabin RWD F1CFL4117/F1CFL411W/F1CGL411B		Flexible Coupling Kit	538522S
Daily 35S18P							
3.0 (132 kw)	2016.04-		Centre	Chassis Cabin RWD F1CFL4117/F1CFL411W/F1CGL411B		Center Bearing Support Kit	539924S
	2016.04-		Centre	Van RWD F1CFL4117/F1CFL411W/F1CGL411B		Center Bearing Support Kit	539924S
	2016.04-		Front;Rear	Chassis Cabin RWD F1CFL4117/F1CFL411W/F1CGL411B		Flexible Coupling	533884
	2016.04-		Front;Rear	Van RWD F1CFL4117/F1CFL411W/F1CGL411B		Flexible Coupling	533884
	2016.04-		Front	Chassis Cabin RWD F1CFL4117/F1CFL411W/F1CGL411B		Flexible Coupling Kit	538522S
	2016.04-		Front	Van RWD F1CFL4117/F1CFL411W/F1CGL411B		Flexible Coupling Kit	538522S
Daily 35S18W							
3.0 (132 kw)	2016.04-		Front	Chassis Cabin 4WD F1CFL411W		Flexible Coupling Kit	538522S
Daily 35S21							
3.0 (150 kw)	2014.03-		Centre	Chassis Cabin RWD F1CFL411G/F1CGL411C		Center Bearing Support Kit	539924S
	2014.03-		Centre	Van RWD F1CFL411G/F1CGL411C		Center Bearing Support Kit	539924S
	2014.03-		Front;Rear	Chassis Cabin RWD F1CFL411G/F1CGL411C		Flexible Coupling	533884
	2014.03-		Front;Rear	Van RWD F1CFL411G/F1CGL411C		Flexible Coupling	533884
	2014.03-		Front	Chassis Cabin RWD F1CFL411G/F1CGL411C		Flexible Coupling Kit	538522S
	2014.03-		Front	Van RWD F1CFL411G/F1CGL411C		Flexible Coupling Kit	538522S
Daily 35S21P							
3.0 (150 kw)	2014.03-		Centre	Chassis Cabin RWD F1CFL411G/F1CGL411C		Center Bearing Support Kit	539924S
	2014.03-		Centre	Van RWD F1CFL411G/F1CGL411C		Center Bearing Support Kit	539924S
	2014.03-		Front;Rear	Chassis Cabin RWD F1CFL411G/F1CGL411C		Flexible Coupling	533884
	2014.03-		Front;Rear	Van RWD F1CFL411G/F1CGL411C		Flexible Coupling	533884
	2014.03-		Front	Chassis Cabin RWD F1CFL411G/F1CGL411C		Flexible Coupling Kit	538522S
	2014.03-		Front	Van RWD F1CFL411G/F1CGL411C		Flexible Coupling Kit	538522S
Daily 40.10							
2.5 (76 kw)	1990.01-1996.04		Front	Van RWD 8140.27 S		Center Bearing Support	539037
Daily 40C11							
2.3 (78 kw)	2011.09-2014.02		Front	Chassis Cabin RWD F1AE3481A		Center Bearing Support	539037
Daily 40C14							
3.0 (100 kw)	2014.03-		Centre	Chassis Cabin RWD F1CFA401A/F1CFA401C/F1CFA401D		Center Bearing Support Kit	539924S
	2014.03-		Centre	Van RWD F1CFA401A/F1CFA401D		Center Bearing Support Kit	539924S
	2014.03-		Front;Rear	Chassis Cabin RWD F1CFA401A/F1CFA401C/F1CFA401D		Flexible Coupling	533884
	2014.03-		Front;Rear	Van RWD F1CFA401A/F1CFA401D		Flexible Coupling	533884
	2014.03-		Front	Chassis Cabin RWD F1CFA401A/F1CFA401C/F1CFA401D		Flexible Coupling Kit	538522S
	2014.03-		Front	Van RWD F1CFA401A/F1CFA401D		Flexible Coupling Kit	538522S
Daily 40C15							
3.0 (107 kw)	2011.09-2014.02		Centre	Chassis Cabin RWD F1CE3481B/F1CE3481J	Installation size:174mm	Center Bearing Support	539036
	2011.09-2014.02		Centre	Van RWD F1CE3481B/F1CE3481J	Installation size:174mm	Center Bearing Support	539036
	2014.03-		Centre	Chassis Cabin RWD F1CE3481J/F1CFL411E/F1CFL411J		Center Bearing Support Kit	539924S
	2014.03-		Centre	Van RWD F1CE3481J/F1CFL411E/F1CFL411J		Center Bearing Support Kit	539924S
	2014.03-		Centre	Bus RWD F1CE3481J		Center Bearing Support Kit	539924S
	2014.03-		Front;Rear	Chassis Cabin RWD F1CE3481J/F1CFL411E/F1CFL411J		Flexible Coupling	533884
	2014.03-		Front;Rear	Van RWD F1CE3481J/F1CFL411E/F1CFL411J		Flexible Coupling	533884
	2014.03-		Front	Chassis Cabin RWD F1CE3481J/F1CFL411E/F1CFL411J		Flexible Coupling Kit	538522S
	2014.03-		Front	Van RWD F1CE3481J/F1CFL411E/F1CFL411J		Flexible Coupling Kit	538522S
Daily 40C15P							
3.0 (107 kw)	2011.09-2014.02		Centre	Chassis Cabin RWD F1CE3481J	Installation size:174mm	Center Bearing Support	539036
	2011.09-2014.02		Centre	Van RWD F1CE3481B/F1CE3481J	Installation size:174mm	Center Bearing Support	539036
	2014.03-		Centre	Chassis Cabin RWD F1CFL411E/F1CFL411J		Center Bearing Support Kit	539924S
	2014.03-		Centre	Van RWD F1CFL411J		Center Bearing Support Kit	539924S
	2014.03-		Front;Rear	Chassis Cabin RWD F1CFL411E/F1CFL411J		Flexible Coupling	533884
	2014.03-		Front;Rear	Van RWD F1CFL411J		Flexible Coupling	533884
	2014.03-		Front	Chassis Cabin RWD F1CFL411E/F1CFL411J		Flexible Coupling Kit	538522S
	2014.03-		Front	Van RWD F1CFL411J		Flexible Coupling Kit	538522S
Daily 40C17							
3.0 (125 kw)	2014.03-		Centre	Chassis Cabin RWD F1CFL411F/F1CFL411H		Center Bearing Support Kit	539924S
	2014.03-		Centre	Van RWD F1CFL411F/F1CFL411H		Center Bearing Support Kit	539924S

	YEAR	TRANSM.	FITTING POSITION	BODY STYLE & DRIVE TYPE & ENGINE	REMARKS	PRODUCT	GSP Ref.
IVECO							
Daily 40C17							
3.0 (125 kw)	2014.03-		Centre	Bus RWD F1CFL411F		Center Bearing Support Kit	539924S
	2014.03-		Front;Rear	Chassis Cabin RWD F1CFL411F/F1CFL411H		Flexible Coupling	533884
	2014.03-		Front;Rear	Van RWD F1CFL411F/F1CFL411H		Flexible Coupling	533884
	2014.03-		Front	Chassis Cabin RWD F1CFL411F/F1CFL411H		Flexible Coupling Kit	538522S
	2014.03-		Front	Van RWD F1CFL411F/F1CFL411H		Flexible Coupling Kit	538522S
Daily 40C17P							
3.0 (125 kw)	2014.03-		Centre	Chassis Cabin RWD F1CFL411F/F1CFL411H		Center Bearing Support Kit	539924S
	2014.03-		Centre	Van RWD F1CFL411F/F1CFL411H		Center Bearing Support Kit	539924S
	2014.03-		Centre	Bus RWD F1CFL411F		Center Bearing Support Kit	539924S
	2014.03-		Front;Rear	Chassis Cabin RWD F1CFL411F/F1CFL411H		Flexible Coupling	533884
	2014.03-		Front;Rear	Van RWD F1CFL411F/F1CFL411H		Flexible Coupling	533884
	2014.03-		Front	Chassis Cabin RWD F1CFL411F/F1CFL411H		Flexible Coupling Kit	538522S
	2014.03-		Front	Van RWD F1CFL411F/F1CFL411H		Flexible Coupling Kit	538522S
Daily 40C18							
3.0 (132 kw)	2016.04-		Centre	Chassis Cabin RWD F1CFL4117/F1CFL411W/F1CGL411B		Center Bearing Support Kit	539924S
	2016.04-		Front;Rear	Chassis Cabin RWD F1CFL4117/F1CFL411W/F1CGL411B		Flexible Coupling	533884
	2016.04-		Front	Chassis Cabin RWD F1CFL4117/F1CFL411W/F1CGL411B		Flexible Coupling Kit	538522S
Daily 40C18P							
3.0 (132 kw)	2016.04-		Centre	Chassis Cabin RWD F1CFL4117/F1CFL411W/F1CGL411B		Center Bearing Support Kit	539924S
	2016.04-		Front;Rear	Chassis Cabin RWD F1CFL4117/F1CFL411W/F1CGL411B		Flexible Coupling	533884
	2016.04-		Front	Chassis Cabin RWD F1CFL4117/F1CFL411W/F1CGL411B		Flexible Coupling Kit	538522S
Daily 40C21							
3.0 (150 kw)	2014.03-		Centre	Chassis Cabin RWD F1CFL411G/F1CGL411C		Center Bearing Support Kit	539924S
	2014.03-		Centre	Van RWD F1CFL411G/F1CGL411C		Center Bearing Support Kit	539924S
	2014.03-		Front;Rear	Chassis Cabin RWD F1CFL411G/F1CGL411C		Flexible Coupling	533884
	2014.03-		Front;Rear	Van RWD F1CFL411G/F1CGL411C		Flexible Coupling	533884
	2014.03-		Front	Chassis Cabin RWD F1CFL411G/F1CGL411C		Flexible Coupling Kit	538522S
	2014.03-		Front	Van RWD F1CFL411G/F1CGL411C		Flexible Coupling Kit	538522S
Daily 40C21P							
3.0 (150 kw)	2014.03-		Centre	Van RWD F1CFL411G/F1CGL411C		Center Bearing Support Kit	539924S
	2014.03-		Centre	Chassis Cabin RWD F1CFL411G/F1CGL411C		Center Bearing Support Kit	539924S
	2014.03-		Front;Rear	Van RWD F1CFL411G/F1CGL411C		Flexible Coupling	533884
	2014.03-		Front;Rear	Chassis Cabin RWD F1CFL411G/F1CGL411C		Flexible Coupling	533884
	2014.03-		Front	Van RWD F1CFL411G/F1CGL411C		Flexible Coupling Kit	538522S
	2014.03-		Front	Chassis Cabin RWD F1CFL411G/F1CGL411C		Flexible Coupling Kit	538522S
Daily 45.10							
2.5 (76 kw)	1989.01-1996.04		Front	Platform/Chassis RWD 8140.27 S		Center Bearing Support	539037
	1989.01-1996.04		Front	Van RWD 8140.27 S		Center Bearing Support	539037
Daily 45C15							
3.0 (107 kw)	2011.09-2014.02		Centre	Chassis Cabin RWD F1CE3481B/F1CE3481J	Installation size:174mm	Center Bearing Support	539036
	2011.09-2014.02		Centre	Van RWD F1CE3481B/F1CE3481J	Installation size:174mm	Center Bearing Support	539036
Daily 45C15P							
3.0 (107 kw)	2011.09-2014.02		Centre	Chassis Cabin RWD F1CE3481B/F1CE3481J	Installation size:174mm	Center Bearing Support	539036
	2011.09-2014.02		Centre	Van RWD F1CE3481B/F1CE3481J	Installation size:174mm	Center Bearing Support	539036
Daily 49.10							
2.5 (76 kw)	1989.01-1996.04		Front	Platform/Chassis RWD 8140.27 S		Center Bearing Support	539037
	1989.01-1996.04		Front	Van RWD 8140.27 S		Center Bearing Support	539037
2.8 (76 kw)	1996.05-1999.05		Front	Platform/Chassis RWD 8140.23		Center Bearing Support	539037
Daily 49.12							
2.8 (90 kw)	1996.05-1999.05		Front	Platform/Chassis RWD 8140.43.		Center Bearing Support	539037
	1996.05-1999.05		Front	Van RWD 8140.43.		Center Bearing Support	539037
Daily 50C14							
3.0 (100 kw)	2014.03-		Centre	Chassis Cabin RWD F1CFA401A/F1CFA401C/F1CFA401D		Center Bearing Support Kit	539924S
	2014.03-		Centre	Van RWD F1CFA401A/F1CFA401B/F1CFA401C/F1CFA401D		Center Bearing Support Kit	539924S
	2014.03-		Centre	Bus RWD F1CFA401A/F1CFA401C/F1CFA401D		Center Bearing Support Kit	539924S
	2014.03-		Front;Rear	Chassis Cabin RWD F1CFA401A/F1CFA401C/F1CFA401D		Flexible Coupling	533884
	2014.03-		Front;Rear	Van RWD F1CFA401A/F1CFA401B/F1CFA401C/F1CFA401D		Flexible Coupling	533884
	2014.03-		Front	Chassis Cabin RWD F1CFA401A/F1CFA401C/F1CFA401D		Flexible Coupling Kit	538522S
	2014.03-		Front	Van RWD F1CFA401A/F1CFA401B/F1CFA401C/F1CFA401D		Flexible Coupling Kit	538522S
Daily 50C14P							
3.0 (100 kw)	2014.03-		Centre	Van RWD F1CFA401A/F1CFA401C/F1CFA401D		Center Bearing Support Kit	539924S
	2014.03-		Centre	Chassis Cabin RWD F1CFA401A/F1CFA401C/F1CFA401D		Center Bearing Support Kit	539924S
	2014.03-		Centre	Bus RWD F1CFA401A/F1CFA401D		Center Bearing Support Kit	539924S
	2014.03-		Front;Rear	Van RWD F1CFA401A/F1CFA401C/F1CFA401D		Flexible Coupling	533884

	YEAR	TRANSM.	FITTING POSITION	BODY STYLE & DRIVE TYPE & ENGINE	REMARKS	PRODUCT	GSP Ref.
IVECO							
Daily 50C14P							
3.0 (100 kw)	2014.03-		Front;Rear	Chassis Cabin RWD F1CFA401A/F1CFA401C/F1CFA401D		Flexible Coupling	533884
	2014.03-		Front	Van RWD F1CFA401A/F1CFA401C/F1CFA401D		Flexible Coupling Kit	538522S
	2014.03-		Front	Chassis Cabin RWD F1CFA401A/F1CFA401C/F1CFA401D		Flexible Coupling Kit	538522S
Daily 50C15							
3.0 (107 kw)	2011.09-2014.02		Centre	Chassis Cabin RWD F1CE3481B/F1CE3481J	Installation size:174mm	Center Bearing Support	539036
	2011.09-2014.02		Centre	Van RWD F1CE3481B/F1CE3481J	Installation size:174mm	Center Bearing Support	539036
	2014.03-		Centre	Chassis Cabin RWD F1CE3481J/F1CFL411E/F1CFL411J		Center Bearing Support Kit	539924S
	2014.03-		Centre	Van RWD F1CE3481J/F1CFL411E/F1CFL411J		Center Bearing Support Kit	539924S
	2014.03-		Centre	Bus RWD F1CFL411E		Center Bearing Support Kit	539924S
	2014.03-		Front;Rear	Chassis Cabin RWD F1CE3481J/F1CFL411E/F1CFL411J		Flexible Coupling	533884
	2014.03-		Front;Rear	Van RWD F1CE3481J/F1CFL411E/F1CFL411J		Flexible Coupling	533884
	2014.03-		Front	Chassis Cabin RWD F1CE3481J/F1CFL411E/F1CFL411J		Flexible Coupling Kit	538522S
	2014.03-		Front	Van RWD F1CE3481J/F1CFL411E/F1CFL411J		Flexible Coupling Kit	538522S
3.0 (110 kw)	2016.04-		Centre	Chassis Cabin RWD F1CFL411A/F1CFL411V/F1CGL411A		Center Bearing Support Kit	539924S
	2016.04-		Centre	Van RWD F1CFL411V/F1CGL411A		Center Bearing Support Kit	539924S
	2016.04-		Front;Rear	Chassis Cabin RWD F1CFL411A/F1CFL411V/F1CGL411A		Flexible Coupling	533884
	2016.04-		Front;Rear	Van RWD F1CFL411V/F1CGL411A		Flexible Coupling	533884
	2016.04-		Front	Chassis Cabin RWD F1CFL411A/F1CFL411V/F1CGL411A		Flexible Coupling Kit	538522S
	2016.04-		Front	Van RWD F1CFL411V/F1CGL411A		Flexible Coupling Kit	538522S
Daily 50C15P							
3.0 (107 kw)	2011.09-2014.02		Centre	Chassis Cabin RWD F1CE3481B/F1CE3481J	Installation size:174mm	Center Bearing Support	539036
	2011.09-2014.02		Centre	Van RWD F1CE3481B/F1CE3481J	Installation size:174mm	Center Bearing Support	539036
	2014.03-		Centre	Van RWD F1CFL411E/F1CFL411J		Center Bearing Support Kit	539924S
	2014.03-		Centre	Chassis Cabin RWD F1CFL411E/F1CFL411J		Center Bearing Support Kit	539924S
	2014.03-		Centre	Bus RWD F1CE3481J/F1CFL411E		Center Bearing Support Kit	539924S
	2014.03-		Front;Rear	Van RWD F1CFL411E/F1CFL411J		Flexible Coupling	533884
	2014.03-		Front;Rear	Chassis Cabin RWD F1CFL411E/F1CFL411J		Flexible Coupling	533884
	2014.03-		Front	Van RWD F1CFL411E/F1CFL411J		Flexible Coupling Kit	538522S
	2014.03-		Front	Chassis Cabin RWD F1CFL411E/F1CFL411J		Flexible Coupling Kit	538522S
Daily 50C17							
3.0 (125 kw)	2014.03-		Centre	Chassis Cabin RWD F1CFL411F/F1CFL411H		Center Bearing Support Kit	539924S
	2014.03-		Centre	Van RWD F1CFL411F/F1CFL411H		Center Bearing Support Kit	539924S
	2014.03-		Centre	Bus RWD F1CFL411F		Center Bearing Support Kit	539924S
	2014.03-		Front;Rear	Chassis Cabin RWD F1CFL411F/F1CFL411H		Flexible Coupling	533884
	2014.03-		Front;Rear	Van RWD F1CFL411F/F1CFL411H		Flexible Coupling	533884
	2014.03-		Front	Chassis Cabin RWD F1CFL411F/F1CFL411H		Flexible Coupling Kit	538522S
	2014.03-		Front	Van RWD F1CFL411F/F1CFL411H		Flexible Coupling Kit	538522S
Daily 50C17P							
3.0 (125 kw)	2014.03-		Centre	Van RWD F1CFL411F/F1CFL411H		Center Bearing Support Kit	539924S
	2014.03-		Centre	Chassis Cabin RWD F1CFL411F/F1CFL411H		Center Bearing Support Kit	539924S
	2014.03-		Centre	Bus RWD F1CFL411F		Center Bearing Support Kit	539924S
	2014.03-		Front;Rear	Van RWD F1CFL411F/F1CFL411H		Flexible Coupling	533884
	2014.03-		Front;Rear	Chassis Cabin RWD F1CFL411F/F1CFL411H		Flexible Coupling	533884
	2014.03-		Front	Van RWD F1CFL411F/F1CFL411H		Flexible Coupling Kit	538522S
	2014.03-		Front	Chassis Cabin RWD F1CFL411F/F1CFL411H		Flexible Coupling Kit	538522S
Daily 50C18							
3.0 (132 kw)	2016.04-		Centre	Van RWD F1CFL4117/F1CFL411W/F1CGL411B		Center Bearing Support Kit	539924S
	2016.04-		Centre	Chassis Cabin RWD F1CFL4117/F1CFL411W/F1CGL411B		Center Bearing Support Kit	539924S
	2016.04-		Front;Rear	Van RWD F1CFL4117/F1CFL411W/F1CGL411B		Flexible Coupling	533884
	2016.04-		Front;Rear	Chassis Cabin RWD F1CFL4117/F1CFL411W/F1CGL411B		Flexible Coupling	533884
	2016.04-		Front	Van RWD F1CFL4117/F1CFL411W/F1CGL411B		Flexible Coupling Kit	538522S
	2016.04-		Front	Chassis Cabin RWD F1CFL4117/F1CFL411W/F1CGL411B		Flexible Coupling Kit	538522S
Daily 50C21							
3.0 (150 kw)	2014.03-		Centre	Chassis Cabin RWD F1CFL411G/F1CGL411C		Center Bearing Support Kit	539924S
	2014.03-		Centre	Van RWD F1CFL411G/F1CGL411C		Center Bearing Support Kit	539924S
	2014.03-		Front;Rear	Chassis Cabin RWD F1CFL411G/F1CGL411C		Flexible Coupling	533884
	2014.03-		Front;Rear	Van RWD F1CFL411G/F1CGL411C		Flexible Coupling	533884
	2014.03-		Front	Chassis Cabin RWD F1CFL411G/F1CGL411C		Flexible Coupling Kit	538522S
	2014.03-		Front	Van RWD F1CFL411G/F1CGL411C		Flexible Coupling Kit	538522S
Daily 50C21P							
3.0 (150 kw)	2014.03-		Centre	Van RWD F1CFL411G/F1CGL411C		Center Bearing Support Kit	539924S
	2014.03-		Centre	Chassis Cabin RWD F1CFL411G/F1CGL411C		Center Bearing Support Kit	539924S
	2014.03-		Front;Rear	Van RWD F1CFL411G/F1CGL411C		Flexible Coupling	533884
	2014.03-		Front;Rear	Chassis Cabin RWD F1CFL411G/F1CGL411C		Flexible Coupling	533884

	YEAR	TRANSM.	FITTING POSITION	BODY STYLE & DRIVE TYPE & ENGINE	REMARKS	PRODUCT	GSP Ref.
IVECO							
Daily 50C21P							
3.0 (150 kw)	2014.03-		Front	Van RWD F1CFL411G/F1CGL411C		Flexible Coupling Kit	538522S
	2014.03-		Front	Chassis Cabin RWD F1CFL411G/F1CGL411C		Flexible Coupling Kit	538522S
Daily 55S15W							
3.0 (107 kw)	2014.03-		Front	Chassis Cabin 4WD F1CE3481J		Flexible Coupling Kit	538522S
Daily 55S17W							
3.0 (125 kw)	2014.03-		Front	Chassis Cabin 4WD F1CFL411F		Flexible Coupling Kit	538522S
Daily 55S18W							
3.0 (132 kw)	2016.04-		Front	Chassis Cabin 4WD F1CFL4117/F1CFL411W		Flexible Coupling Kit	538522S
Daily 59.12							
2.5 (85 kw)	1991.05-1996.04		Front	Platform/Chassis RWD 8140.47, 8140.47S		Center Bearing Support	539037
	1991.05-1996.04		Front	Van RWD 8140.47, 8140.47S		Center Bearing Support	539037
2.8 (90 kw)	1996.05-1999.05		Front	Platform/Chassis RWD 8140.43.		Center Bearing Support	539037
	1996.05-1999.05		Front	Van RWD 8140.43.		Center Bearing Support	539037
Daily 60C14							
3.0 (100 kw)	2014.03-		Centre	Chassis Cabin RWD F1CFA401A/F1CFA401C/F1CFA401D		Center Bearing Support Kit	539924S
	2014.03-		Front;Rear	Chassis Cabin RWD F1CFA401A/F1CFA401C/F1CFA401D		Flexible Coupling	533884
	2014.03-		Front	Chassis Cabin RWD F1CFA401A/F1CFA401C/F1CFA401D		Flexible Coupling Kit	538522S
Daily 60C15							
3.0 (107 kw)	2011.09-2014.02		Centre	Chassis Cabin RWD F1CE3481B/F1CE3481J	Installation size:174mm	Center Bearing Support	539036
	2011.09-2014.02		Centre	Van RWD F1CE3481B	Installation size:174mm	Center Bearing Support	539036
	2014.03-		Centre	Chassis Cabin RWD F1CFL411E/F1CFL411J		Center Bearing Support Kit	539924S
	2014.03-		Centre	Bus RWD F1CE3481J		Center Bearing Support Kit	539924S
	2014.03-		Front;Rear	Chassis Cabin RWD F1CFL411E/F1CFL411J		Flexible Coupling	533884
	2014.03-		Front	Chassis Cabin RWD F1CFL411E/F1CFL411J		Flexible Coupling Kit	538522S
Daily 60C15P							
3.0 (107 kw)	2011.09-2014.02		Centre	Chassis Cabin RWD F1CE3481B/F1CE3481J	Installation size:174mm	Center Bearing Support	539036
	2014.03-		Centre	Chassis Cabin RWD F1CFL411J		Center Bearing Support Kit	539924S
	2014.03-		Centre	Bus RWD F1CE3481J/F1CFL411E		Center Bearing Support Kit	539924S
	2014.03-		Front;Rear	Chassis Cabin RWD F1CFL411J		Flexible Coupling	533884
	2014.03-		Front	Chassis Cabin RWD F1CFL411J		Flexible Coupling Kit	538522S
Daily 60C17							
3.0 (125 kw)	2014.03-		Centre	Chassis Cabin RWD F1CFL411F/F1CFL411H		Center Bearing Support Kit	539924S
	2014.03-		Centre	Bus RWD F1CFL411F		Center Bearing Support Kit	539924S
	2014.03-		Front;Rear	Chassis Cabin RWD F1CFL411F/F1CFL411H		Flexible Coupling	533884
	2014.03-		Front	Chassis Cabin RWD F1CFL411F/F1CFL411H		Flexible Coupling Kit	538522S
Daily 60C17P							
3.0 (125 kw)	2014.03-		Centre	Chassis Cabin RWD F1CFL411F/F1CFL411H		Center Bearing Support Kit	539924S
	2014.03-		Centre	Van RWD F1CFL411F		Center Bearing Support Kit	539924S
	2014.03-		Centre	Bus RWD F1CFL411F		Center Bearing Support Kit	539924S
	2014.03-		Front;Rear	Chassis Cabin RWD F1CFL411F/F1CFL411H		Flexible Coupling	533884
	2014.03-		Front;Rear	Van RWD F1CFL411F		Flexible Coupling	533884
	2014.03-		Front	Chassis Cabin RWD F1CFL411F/F1CFL411H		Flexible Coupling Kit	538522S
	2014.03-		Front	Van RWD F1CFL411F		Flexible Coupling Kit	538522S
Daily 60C21							
3.0 (150 kw)	2014.03-		Centre	Chassis Cabin RWD F1CFL411G/F1CGL411C		Center Bearing Support Kit	539924S
	2014.03-		Front;Rear	Chassis Cabin RWD F1CFL411G/F1CGL411C		Flexible Coupling	533884
	2014.03-		Front	Chassis Cabin RWD F1CFL411G/F1CGL411C		Flexible Coupling Kit	538522S
Daily 65C13							
2.8 (103 kw)	1999.07-2006.12		Centre	Chassis Cabin RWD 814043K		Center Bearing Support	539036
Daily 65C14							
3.0 (100 kw)	2014.03-		Centre	Chassis Cabin RWD F1CFA401A/F1CFA401C/F1CFA401D		Center Bearing Support Kit	539924S
	2014.03-		Centre	Van RWD F1CFA401A/F1CFA401C/F1CFA401D		Center Bearing Support Kit	539924S
	2014.03-		Front;Rear	Chassis Cabin RWD F1CFA401A/F1CFA401C/F1CFA401D		Flexible Coupling	533884
	2014.03-		Front;Rear	Van RWD F1CFA401A/F1CFA401C/F1CFA401D		Flexible Coupling	533884
	2014.03-		Front	Chassis Cabin RWD F1CFA401A/F1CFA401C/F1CFA401D		Flexible Coupling Kit	538522S
	2014.03-		Front	Van RWD F1CFA401A/F1CFA401C/F1CFA401D		Flexible Coupling Kit	538522S
Daily 65C14P							
3.0 (100 kw)	2014.03-		Centre	Van RWD F1CFA401A/F1CFA401C/F1CFA401D		Center Bearing Support Kit	539924S
	2014.03-		Centre	Chassis Cabin RWD F1CFA401A/F1CFA401C/F1CFA401D		Center Bearing Support Kit	539924S
	2014.03-		Front;Rear	Van RWD F1CFA401A/F1CFA401C/F1CFA401D		Flexible Coupling	533884
	2014.03-		Front;Rear	Chassis Cabin RWD F1CFA401A/F1CFA401C/F1CFA401D		Flexible Coupling	533884
	2014.03-		Front	Van RWD F1CFA401A/F1CFA401C/F1CFA401D		Flexible Coupling Kit	538522S
	2014.03-		Front	Chassis Cabin RWD F1CFA401A/F1CFA401C/F1CFA401D		Flexible Coupling Kit	538522S

	YEAR	TRANSM.	FITTING POSITION	BODY STYLE & DRIVE TYPE & ENGINE	REMARKS	PRODUCT	GSP Ref.
IVECO							
Daily 65C15							
3.0 (107 kw)	2011.09-2014.02		Centre	Chassis Cabin RWD F1CE3481B/F1CE3481J	Installation size:174mm	Center Bearing Support	539036
	2011.09-2014.02		Centre	Van RWD F1CE3481B/F1CE3481J	Installation size:174mm	Center Bearing Support	539036
	2014.03-		Centre	Chassis Cabin RWD F1CE3481J/F1CFL411E/F1CFL411J		Center Bearing Support Kit	539924S
	2014.03-		Centre	Van RWD F1CE3481J/F1CFL411E		Center Bearing Support Kit	539924S
	2014.03-		Front;Rear	Chassis Cabin RWD F1CE3481J/F1CFL411E/F1CFL411J		Flexible Coupling	533884
	2014.03-		Front;Rear	Van RWD F1CE3481J/F1CFL411E		Flexible Coupling	533884
	2014.03-		Front	Chassis Cabin RWD F1CE3481J/F1CFL411E/F1CFL411J		Flexible Coupling Kit	538522S
	2014.03-		Front	Van RWD F1CE3481J/F1CFL411E		Flexible Coupling Kit	538522S
Daily 65C15P							
3.0 (107 kw)	2011.09-2014.02		Centre	Chassis Cabin RWD F1CE3481B/F1CE3481J	Installation size:174mm	Center Bearing Support	539036
	2014.03-		Centre	Van RWD F1CFL411E		Center Bearing Support Kit	539924S
	2014.03-		Centre	Chassis Cabin RWD F1CE3481J/F1CFL411E/F1CFL411J		Center Bearing Support Kit	539924S
	2014.03-		Front;Rear	Van RWD F1CFL411E		Flexible Coupling	533884
	2014.03-		Front;Rear	Chassis Cabin RWD F1CE3481J/F1CFL411E/F1CFL411J		Flexible Coupling	533884
	2014.03-		Front	Van RWD F1CFL411E		Flexible Coupling Kit	538522S
	2014.03-		Front	Chassis Cabin RWD F1CE3481J/F1CFL411E/F1CFL411J		Flexible Coupling Kit	538522S
Daily 65C17							
3.0 (125 kw)	2009.09-2011.08		Centre	Chassis Cabin RWD F1CE3481C		Center Bearing Support	539036
	2009.09-2011.08		Centre	Van RWD F1CE3481C		Center Bearing Support	539036
	2014.03-		Centre	Chassis Cabin RWD F1CFL411F/F1CFL411H		Center Bearing Support Kit	539924S
	2014.03-		Centre	Van RWD F1CFL411F		Center Bearing Support Kit	539924S
	2014.03-		Front;Rear	Chassis Cabin RWD F1CFL411F/F1CFL411H		Flexible Coupling	533884
	2014.03-		Front;Rear	Van RWD F1CFL411F		Flexible Coupling	533884
	2014.03-		Front	Chassis Cabin RWD F1CFL411F/F1CFL411H		Flexible Coupling Kit	538522S
	2014.03-		Front	Van RWD F1CFL411F		Flexible Coupling Kit	538522S
Daily 65C17P							
3.0 (125 kw)	2009.09-2011.08		Centre	Chassis Cabin RWD F1CE3481C		Center Bearing Support	539036
	2009.09-2011.08		Centre	Van RWD F1CE3481C		Center Bearing Support	539036
	2014.03-		Centre	Van RWD F1CFL411F		Center Bearing Support Kit	539924S
	2014.03-		Centre	Chassis Cabin RWD F1CFL411F/F1CFL411H		Center Bearing Support Kit	539924S
	2014.03-		Front;Rear	Van RWD F1CFL411F		Flexible Coupling	533884
	2014.03-		Front;Rear	Chassis Cabin RWD F1CFL411F/F1CFL411H		Flexible Coupling	533884
	2014.03-		Front	Van RWD F1CFL411F		Flexible Coupling Kit	538522S
	2014.03-		Front	Chassis Cabin RWD F1CFL411F/F1CFL411H		Flexible Coupling Kit	538522S
Daily 65C18							
3.0 (130 kw)	2006.06-2009.08		Centre	Van RWD F1CE0481H		Center Bearing Support	539036
	2006.06-2011.08		Centre	Chassis Cabin RWD F1CE0481H		Center Bearing Support	539036
3.0 (132 kw)	2016.04-		Centre	Chassis Cabin RWD F1CFL4117/F1CFL411W/F1CGL411B		Center Bearing Support Kit	539924S
	2016.04-		Front;Rear	Chassis Cabin RWD F1CFL4117/F1CFL411W/F1CGL411B		Flexible Coupling	533884
	2016.04-		Front	Chassis Cabin RWD F1CFL4117/F1CFL411W/F1CGL411B		Flexible Coupling Kit	538522S
Daily 65C18P							
3.0 (130 kw)	2006.06-2009.08		Centre	Van RWD F1CE0481H		Center Bearing Support	539036
	2006.06-2011.08		Centre	Chassis Cabin RWD F1CE0481H		Center Bearing Support	539036
Daily 65C21							
3.0 (150 kw)	2014.03-		Centre	Chassis Cabin RWD F1CFL411G/F1CGL411C		Center Bearing Support Kit	539924S
	2014.03-		Front;Rear	Chassis Cabin RWD F1CFL411G/F1CGL411C		Flexible Coupling	533884
	2014.03-		Front	Chassis Cabin RWD F1CFL411G/F1CGL411C		Flexible Coupling Kit	538522S
Daily 65C21P							
3.0 (150 kw)	2014.03-		Centre	Chassis Cabin RWD F1CFL411G/F1CGL411C		Center Bearing Support Kit	539924S
	2014.03-		Front;Rear	Chassis Cabin RWD F1CFL411G/F1CGL411C		Flexible Coupling	533884
	2014.03-		Front	Chassis Cabin RWD F1CFL411G/F1CGL411C		Flexible Coupling Kit	538522S
Daily 70C14							
3.0 (100 kw)	2014.03-		Centre	Chassis Cabin RWD F1CFA401A/F1CFA401C/F1CFA401D		Center Bearing Support Kit	539924S
	2014.03-		Centre	Van RWD F1CFA401A/F1CFA401C/F1CFA401D		Center Bearing Support Kit	539924S
	2014.03-		Front;Rear	Chassis Cabin RWD F1CFA401A/F1CFA401C/F1CFA401D		Flexible Coupling	533884
	2014.03-		Front;Rear	Van RWD F1CFA401A/F1CFA401C/F1CFA401D		Flexible Coupling	533884
	2014.03-		Front	Chassis Cabin RWD F1CFA401A/F1CFA401C/F1CFA401D		Flexible Coupling Kit	538522S
	2014.03-		Front	Van RWD F1CFA401A/F1CFA401C/F1CFA401D		Flexible Coupling Kit	538522S
Daily 70C14P							
3.0 (100 kw)	2014.03-		Centre	Chassis Cabin RWD F1CFA401A/F1CFA401C/F1CFA401D		Center Bearing Support Kit	539924S
	2014.03-		Front;Rear	Chassis Cabin RWD F1CFA401A/F1CFA401C/F1CFA401D		Flexible Coupling	533884
	2014.03-		Front	Chassis Cabin RWD F1CFA401A/F1CFA401C/F1CFA401D		Flexible Coupling Kit	538522S

	YEAR	TRANSM.	FITTING POSITION	BODY STYLE & DRIVE TYPE & ENGINE	REMARKS	PRODUCT	GSP Ref.
IVECO							
Daily 70C15							
3.0 (107 kw)	2011.09-2014.02		Centre	Chassis Cabin RWD F1CE3481B/F1CE3481J	Installation size:174mm	Center Bearing Support	539036
	2011.09-2014.02		Centre	Van RWD F1CE3481B/F1CE3481J	Installation size:174mm	Center Bearing Support	539036
	2014.03-		Centre	Chassis Cabin RWD F1CE3481J/F1CFL411E/F1CFL411J		Center Bearing Support Kit	539924S
	2014.03-		Centre	Van RWD F1CE3481J/F1CFL411E		Center Bearing Support Kit	539924S
	2014.03-		Front;Rear	Chassis Cabin RWD F1CE3481J/F1CFL411E/F1CFL411J		Flexible Coupling	533884
	2014.03-		Front;Rear	Van RWD F1CE3481J/F1CFL411E		Flexible Coupling	533884
	2014.03-		Front	Chassis Cabin RWD F1CE3481J/F1CFL411E/F1CFL411J		Flexible Coupling Kit	538522S
	2014.03-		Front	Van RWD F1CE3481J/F1CFL411E		Flexible Coupling Kit	538522S
3.0 (110 kw)	2016.04-		Centre	Chassis Cabin RWD F1CFL411A/F1CFL411V/F1CGL411A		Center Bearing Support Kit	539924S
	2016.04-		Front;Rear	Chassis Cabin RWD F1CFL411A/F1CFL411V/F1CGL411A		Flexible Coupling	533884
	2016.04-		Front	Chassis Cabin RWD F1CFL411A/F1CFL411V/F1CGL411A		Flexible Coupling Kit	538522S
Daily 70C15P							
3.0 (107 kw)	2011.09-2014.02		Centre	Chassis Cabin RWD F1CE3481B/F1CE3481J	Installation size:174mm	Center Bearing Support	539036
	2014.03-		Centre	Van RWD F1CFL411E		Center Bearing Support Kit	539924S
	2014.03-		Centre	Chassis Cabin RWD F1CE3481J/F1CFL411E/F1CFL411J		Center Bearing Support Kit	539924S
	2014.03-		Front;Rear	Van RWD F1CFL411E		Flexible Coupling	533884
	2014.03-		Front;Rear	Chassis Cabin RWD F1CE3481J/F1CFL411E/F1CFL411J		Flexible Coupling	533884
	2014.03-		Front	Van RWD F1CFL411E		Flexible Coupling Kit	538522S
	2014.03-		Front	Chassis Cabin RWD F1CE3481J/F1CFL411E/F1CFL411J		Flexible Coupling Kit	538522S
Daily 70C17							
3.0 (125 kw)	2009.09-2011.08		Centre	Chassis Cabin RWD F1CE3481C		Center Bearing Support	539036
	2009.09-2011.08		Centre	Van RWD F1CE3481C		Center Bearing Support	539036
	2014.03-		Centre	Chassis Cabin RWD F1CFL411F/F1CFL411H		Center Bearing Support Kit	539924S
	2014.03-		Centre	Van RWD F1CFL411F		Center Bearing Support Kit	539924S
	2014.03-		Front;Rear	Chassis Cabin RWD F1CFL411F/F1CFL411H		Flexible Coupling	533884
	2014.03-		Front;Rear	Van RWD F1CFL411F		Flexible Coupling	533884
	2014.03-		Front	Chassis Cabin RWD F1CFL411F/F1CFL411H		Flexible Coupling Kit	538522S
	2014.03-		Front	Van RWD F1CFL411F		Flexible Coupling Kit	538522S
Daily 70C17P							
3.0 (125 kw)	2009.09-2011.08		Centre	Chassis Cabin RWD F1CE3481C		Center Bearing Support	539036
	2009.09-2011.08		Centre	Van RWD F1CE3481C		Center Bearing Support	539036
	2014.03-		Centre	Van RWD F1CFL411F		Center Bearing Support Kit	539924S
	2014.03-		Centre	Chassis Cabin RWD F1CFL411F/F1CFL411H		Center Bearing Support Kit	539924S
	2014.03-		Front;Rear	Van RWD F1CFL411F		Flexible Coupling	533884
	2014.03-		Front;Rear	Chassis Cabin RWD F1CFL411F/F1CFL411H		Flexible Coupling	533884
	2014.03-		Front	Van RWD F1CFL411F		Flexible Coupling Kit	538522S
	2014.03-		Front	Chassis Cabin RWD F1CFL411F/F1CFL411H		Flexible Coupling Kit	538522S
Daily 70C18							
3.0 (132 kw)	2016.04-		Centre	Chassis Cabin RWD F1CFL4117/F1CFL411W/F1CGL411B		Center Bearing Support Kit	539924S
	2016.04-		Front;Rear	Chassis Cabin RWD F1CFL4117/F1CFL411W/F1CGL411B		Flexible Coupling	533884
	2016.04-		Front	Chassis Cabin RWD F1CFL4117/F1CFL411W/F1CGL411B		Flexible Coupling Kit	538522S
Daily 70C18P							
3.0 (132 kw)	2016.04-		Centre	Chassis Cabin RWD F1CFL4117/F1CFL411W/F1CGL411B		Center Bearing Support Kit	539924S
	2016.04-		Front;Rear	Chassis Cabin RWD F1CFL4117/F1CFL411W/F1CGL411B		Flexible Coupling	533884
	2016.04-		Front	Chassis Cabin RWD F1CFL4117/F1CFL411W/F1CGL411B		Flexible Coupling Kit	538522S
Daily 70C21							
3.0 (150 kw)	2014.03-		Centre	Chassis Cabin RWD F1CFL411G/F1CGL411C		Center Bearing Support Kit	539924S
	2014.03-		Front;Rear	Chassis Cabin RWD F1CFL411G/F1CGL411C		Flexible Coupling	533884
	2014.03-		Front	Chassis Cabin RWD F1CFL411G/F1CGL411C		Flexible Coupling Kit	538522S
Daily 70C21P							
3.0 (150 kw)	2014.03-		Centre	Chassis Cabin RWD F1CFL411G/F1CGL411C		Center Bearing Support Kit	539924S
	2014.03-		Front;Rear	Chassis Cabin RWD F1CFL411G/F1CGL411C		Flexible Coupling	533884
	2014.03-		Front	Chassis Cabin RWD F1CFL411G/F1CGL411C		Flexible Coupling Kit	538522S
Daily A40.10							
2.5 (76 kw)	1991.01-1996.12		Front	Bus RWD 8140.27 S		Center Bearing Support	539037
2.8 (76 kw)	1996.09-1999.05		Front	Bus RWD 8140.23		Center Bearing Support	539037
Daily A45.10							
2.5 (76 kw)	1991.01-1996.04		Front	Bus RWD 8140.27 S		Center Bearing Support	539037
2.8 (76 kw)	1996.05-1999.05		Front	Bus RWD 8140.23		Center Bearing Support	539037
Daily A45.12							
2.5 (85 kw)	1990.06-1996.04		Front	Bus RWD 8140.47, 8140.47S		Center Bearing Support	539037
2.8 (90 kw)	1996.05-1999.05		Front	Bus RWD 8140.43.		Center Bearing Support	539037

	YEAR	TRANSM.	FITTING POSITION	BODY STYLE & DRIVE TYPE & ENGINE	REMARKS	PRODUCT	GSP Ref.
IVECO							
Daily A49.10							
2.5 (76 kw)	1990.01-1996.01		Front	Bus RWD 8140.27 S		Center Bearing Support	539037
JAGUAR							
F-Pace							
2.0 (132 kw)	2015.09-	AT	Front	SUV 4WD 204DTD(AJ20D4)/204DTH(AJ20D4)	Model year from:2017,Model year to:2019	Propshaft	PS900596
	2015.09-	AT	Rear	SUV 4WD 204DTD(AJ20D4)/204DTH(AJ20D4)	Model year from:2016,Model year to:2020	Propshaft	PS900592
	2015.09-	AT	-	SUV 4WD 204DTD(AJ20D4)/204DTH(AJ20D4)	Model year from:2016,Model year to:2020	Joint,propshaft	602071
	2015.09-		Centre	SUV 4WD 204DTD(AJ20D4)/204DTH(AJ20D4)		Center Bearing Support	539919
2.0 (177 kw)	2017.02-	AT	Front	SUV 4WD 204DTA(AJ20D4)	Model year to:2019	Propshaft	PS900596
	2017.02-	AT	Rear	SUV 4WD 204DTA(AJ20D4)		Propshaft	PS900592
	2017.02-	AT	-	SUV 4WD 204DTA(AJ20D4)		Joint,propshaft	602071
	2017.02-		Centre	SUV 4WD 204DTA(AJ20D4)		Center Bearing Support	539919
2.0 (184 kw)	2017.02-	AT	Front	SUV 4WD PT204(AJ20P4)	Model year from:2018	Propshaft	PS900596
	2017.02-	AT	Rear	SUV 4WD PT204(AJ20P4)		Propshaft	PS900592
	2017.02-	AT	-	SUV 4WD PT204(AJ20P4)		Joint,propshaft	602071
	2017.02-		Centre	SUV 4WD PT204(AJ20P4)		Center Bearing Support	539919
2.0 (221 kw)	2017.06-	AT	Front	SUV 4WD PT204(AJ20P4)	Model year from:2018	Propshaft	PS900596
	2017.06-	AT	Rear	SUV 4WD PT204(AJ20P4)		Propshaft	PS900592
	2017.06-	AT	-	SUV 4WD PT204(AJ20P4)		Joint,propshaft	602071
	2017.06-		Centre	SUV 4WD PT204(AJ20P4)		Center Bearing Support	539919
XE							
2.0 (184 kw)	2017.02-	8AT	Front	Saloon 4WD PT204(AJ20P4)	Date from:2018.01,Date to:2020.12	Propshaft	PS901753
2.0 (221 kw)	2017.06-	8AT	Front	Saloon 4WD PT204(AJ20P4)	Date from:2018.01,Date to:2020.12	Propshaft	PS901753
XF							
2.7 (152 kw)	2007.10-2015.04		Front	Saloon RWD 7G(AJTDV6)		Flexible Coupling	533420
3.0 (175 kw)	2007.10-2015.04		Front	Saloon RWD FG(AJV6)		Flexible Coupling	533420
3.0 (177 kw)	2009.03-2015.04		Front	Saloon RWD 306DT(AJTDV6)		Flexible Coupling	533420
3.0 (202 kw)	2009.03-2015.04		Front	Saloon RWD 306DT(AJTDV6)		Flexible Coupling	533420
3.0 (250 kw)	2015.07-	8AT	Front	Saloon 4WD 306PS(AJ126)	Date to:2020.12	Propshaft	PS901753
3.0 (254 kw)	2013.09-2015.04	AT	Rear	Saloon 4WD 306PS		Propshaft	PS901735
3.0 (280 kw)	2015.07-	8AT	Front	Saloon 4WD 306PS(AJ126)	Date to:2020.12	Propshaft	PS901753
4.2 (219 kw)	2008.03-2015.04		Front	Saloon RWD SV82G		Flexible Coupling	533420
4.2 (306 kw)	2008.03-2015.04		Front	Saloon RWD SV8TS		Flexible Coupling	533420
5.0 (283 kw)	2009.07-2015.04		Front	Saloon RWD 508PN(AJ133)		Flexible Coupling	533420
XF Sportbrake							
3.0 (280 kw)	2017.07-	8AT	Front	Estate 4WD 306PS(AJ126)	Date to:2020.12	Propshaft	PS901753
XFR							
5.0 (346 kw)	2009.01-2015.04		Front	Saloon RWD 508PS(AJ133)		Flexible Coupling	533420
5.0 (375 kw)	2009.01-2015.04		Front	Saloon RWD 508PS(AJ133)		Flexible Coupling	533420
5.0 (380 kw)	2013.01-2015.04		Front	Saloon RWD 508PS(AJ133)		Flexible Coupling	533420
XFRS							
5.0 (405 kw)	2012.10-2015.04		Front	Saloon RWD 508PS(AJ133)		Flexible Coupling	533420
XFRS Sportbrake							
5.0 (405 kw)	2014.02-2015.04		Front	Estate RWD 508PS(AJ133)		Flexible Coupling	533420
XJ							
3.0 (202 kw)	2009.07-2016.04		Front	Saloon RWD 306DT(AJTDV6)		Flexible Coupling	533420
3.0 (250 kw)	2012.03-2019.12		Front	Saloon RWD 306PS(AJ126)		Flexible Coupling	533420
	2012.10-2019.12		Front	Saloon 4WD 306PS(AJ126)		Flexible Coupling	533420
5.0 (283 kw)	2010.01-2019.12		Front	Saloon RWD 508PN(AJ133)		Flexible Coupling	533420
5.0 (346 kw)	2010.01-2019.12		Front	Saloon RWD 508PS(AJ133)		Flexible Coupling	533420
5.0 (375 kw)	2010.01-2019.12		Front	Saloon RWD 508PS(AJ133)		Flexible Coupling	533420
5.0 (405 kw)	2013.06-2019.12		Front	Saloon RWD 508PS(AJ133)		Flexible Coupling	533420
5.0 (423 kw)	2017.06-2019.12		Front	Saloon RWD 508PS(AJ133)		Flexible Coupling	533420
XK							
3.5 (190 kw)	2007.07-2008.12		Front	Coupe RWD 4G(AJV8)		Flexible Coupling	533420
	2007.10-2008.12		Front	Cabriolet RWD 4G(AJV8)		Flexible Coupling	533420
5.0 (283 kw)	2009.01-2014.07		Front	Cabriolet RWD 508PN(AJ133)		Flexible Coupling	533420
	2009.01-2014.12		Front	Coupe RWD 508PN(AJ133)		Flexible Coupling	533420
XKR							
4.2 (291 kw)	2006.03-2009.12		Front	Coupe RWD AJ36		Flexible Coupling	533420
	2007.09-2009.12		Front	Cabriolet RWD AJ36		Flexible Coupling	533420
4.2 (306 kw)	2006.03-2014.07		Front	Coupe RWD AJ8T24R		Flexible Coupling	533420
5.0 (375 kw)	2009.01-2014.07		Front	Cabriolet RWD 508PS(AJ133)		Flexible Coupling	533420
	2009.01-2014.07		Front	Coupe RWD 508PS(AJ133)		Flexible Coupling	533420

	YEAR	TRANSM.	FITTING POSITION	BODY STYLE & DRIVE TYPE & ENGINE	REMARKS	PRODUCT	GSP Ref.
JAGUAR							
XKRS							
5.0 (405 kw)	2011.01-2015.03		Front	Coupe RWD 508PS(AJ133)		Flexible Coupling	533420
	2011.01-2015.03		Front	Cabriolet RWD 508PS(AJ133)		Flexible Coupling	533420
JEEP							
Cherokee							
2.0 (200 kw)	2018.09-	AT	Rear	SUV 4WD EC1	Model year from:2019,Model year to:2022	Propshaft	PS901560
2.4 (108 kw)	2001.09-2005.09	AT/MT	Front	Terrain cab wagon closed 4WD ED1		Joint,propshaft	816010
	2001.09-2005.09	MT	Rear	Terrain cab wagon closed 4WD ED1		Joint,propshaft	899032
2.4 (130 kw)	2013.11-	AT	Rear	SUV 4WD ED6/EDD	Model year from:2014,Model year to:2022	Propshaft	PS901560
	2013.11-	AT	-	SUV 4WD ED6/EDD		Joint,propshaft	802210
2.4 (135 kw)	2015.04-		Rear	SUV 4WD ED6	Model year to:2022	Propshaft	PS901560
	2015.04-	AT	-	SUV 4WD ED6		Joint,propshaft	802210
2.4 (137 kw)	2013.06-2018.08	AT	Rear	SUV 4WD ED6	Model year from:2014,Model year to:2022	Propshaft	PS901560
	2013.06-2018.08	AT	-	SUV 4WD ED6		Joint,propshaft	802210
2.5 (89 kw)	1995.10-2001.09	4AT/5MT	Front	Closed Off-Road Vehicle 4WD EPE	Model year from:1997,Model year to:2000	Propshaft	PS900291
	1995.10-2001.09		Front	Closed Off-Road Vehicle 4WD EPE		Joint,propshaft	616011
2.5 (105 kw)	2001.09-2005.09	MT	Rear	Terrain cab wagon closed 4WD ENJ		Joint,propshaft	899032
2.8 (110 kw)	2002.09-2008.01	MT	Front	Terrain cab wagon closed 4WD ENR	Model year to:2007	Propshaft	PS901681
	2002.09-2008.01	AT/MT	Rear	Terrain cab wagon closed 4WD ENR		Joint,propshaft	899032
2.8 (120 kw)	2004.11-2008.01	MT	Front	Terrain cab wagon closed 4WD ENR	Model year to:2007	Propshaft	PS901681
	2004.11-2008.01	AT/MT	Rear	Terrain cab wagon closed 4WD ENR		Joint,propshaft	899032
2.8 (130 kw)	2008.05-2013.03	AT	Front	Terrain cab wagon closed 4WD ENS	Model year to:2013	Propshaft	PS901579
2.8 (147 kw)	2010.01-2013.03	AT	Front	Terrain cab wagon closed 4WD ENS	Model year to:2013	Propshaft	PS901579
3.2 (199 kw)	2014.05-		Rear	SUV 4WD EHB	Model year to:2022	Propshaft	PS901560
	2014.05-	AT	-	SUV 4WD EHB		Joint,propshaft	802210
3.2 (200 kw)	2013.11-	AT	Rear	SUV 4WD EHB	Model year from:2014,Model year to:2022	Propshaft	PS901560
	2013.11-	AT	-	SUV 4WD EHB		Joint,propshaft	802210
	2015.08-	AT	Rear	SUV Van 4WD EHB	Model year to:2022	Propshaft	PS901560
3.2 (202 kw)	2013.06-	AT	Rear	SUV 4WD EHB/EHK	Model year to:2022	Propshaft	PS901560
	2013.06-	AT	-	SUV 4WD EHB/EHK		Joint,propshaft	802210
3.7 (150 kw)	2001.10-2004.09		Rear	Terrain cab wagon closed RWD EKG	Model year from:2004	Propshaft	PS901576
	2001.10-2004.09	AT	Rear	Terrain cab wagon closed RWD EKG	For Model year:2002	Propshaft	PS901575
	2001.10-2004.09	AT	Rear	Terrain cab wagon closed RWD EKG	For Model year:2003	Propshaft	PS901578
	2001.10-2008.01	AT	Front	Terrain cab wagon closed 4WD EKG	Model year to:2007	Propshaft	202441
	2001.10-2008.01	AT	Front	Terrain cab wagon closed 4WD EKG	Transm. Type:Command-Trac,Part time AWD,Trans. code:DHN	Joint,propshaft	816010
	2001.10-2008.01	AT/MT	Front	Terrain cab wagon closed 4WD EKG	Pipe diameter:52mm;Transm. Type:Full time AWD,Selec-Trac;Trans. code:NV231/NV242	Joint,propshaft	816010
	2001.10-2008.01	AT	Rear	Terrain cab wagon closed 4WD EKG		Joint,propshaft	899032
3.7 (151 kw)	2008.05-2013.03	AT	Front	Terrain cab wagon closed 4WD EKG	Model year to:2013;for OE No.:52853441AF	Propshaft	PS901579
3.7 (155 kw)	2001.09-2004.09	AT	Front	Terrain cab wagon closed 4WD EKG	Transfer Case ID: DHN	Propshaft	202441
	2001.09-2004.09	AT	Front	Terrain cab wagon closed 4WD EKG	Transfer Case ID: NV231, NV242	Propshaft	202443
	2001.09-2004.09	AT	Rear	Terrain cab wagon closed 4WD EKG	Model year from:2002,Model year to:2003;for OE No.:52111558AD	Propshaft	PS901577
	2001.09-2004.09	AT	Front	Terrain cab wagon closed 4WD EKG	Transm. Type:Command-Trac,Part time AWD,Trans. code:DHN	Joint,propshaft	816010
	2001.09-2004.09	AT/MT	Front	Terrain cab wagon closed 4WD EKG	Pipe diameter:52mm;Transm. Type:Full time AWD,Selec-Trac;Trans. code:NV231/NV242	Joint,propshaft	816010
	2001.09-2004.09	AT	Rear	Terrain cab wagon closed 4WD EKG		Joint,propshaft	899032
3.7 (157 kw)	2001.06-2007.10	AT	Front	Terrain cab wagon closed 4WD EKG	for OE No.:52111596AB	Propshaft	202441
	2001.06-2007.10	AT	Front	Terrain cab wagon closed 4WD EKG	Model year to:2003;for OE No.:52111597AA	Propshaft	202443
	2001.06-2007.10	AT	Rear	Terrain cab wagon closed 4WD EKG	Model year from:2002,Model year to:2003;for OE No.:52111558AD	Propshaft	PS901577
	2010.01-2013.03	AT	Front	Terrain cab wagon closed 4WD EKG	for OE No.:52853441AF	Propshaft	PS901579
4.0 (127 kw)	1993.09-2001.09	AT	Front	Terrain cab wagon closed 4WD MX400L	For Model year:2001	Propshaft	PS900276
	1993.09-2001.09	MT	Front	Terrain cab wagon closed 4WD MX400L		Propshaft	PS900292
4.0 (135 kw)	1991.12-1995.09	4AT	Front	Terrain cab wagon closed 4WD ERH	For Model year:2001	Propshaft	PS900276
	1991.12-1995.09	MT	Front	Terrain cab wagon closed 4WD ERH		Propshaft	PS900292
	1999.02-2001.09	AT	Front	Terrain cab wagon closed 4WD MX400L	For Model year:2001	Propshaft	PS900276
4.0 (136 kw)	1988.01-2001.09	AT	Front	Terrain cab wagon closed 4WD ERH	For Model year:2001	Propshaft	PS900276
	1988.01-2001.09	MT	Front	Terrain cab wagon closed 4WD ERH		Propshaft	PS900292
4.0 (142 kw)	1990.09-1999.12		Front	Closed Off-Road Vehicle 4WD ERH		Joint,propshaft	616011
Cherokee Classic							
4.0 (131 kw)	1999.02-2001.09	AT	Front	Terrain cab wagon closed 4WD ERH	For Model year:2001	Propshaft	PS900276
	1999.02-2001.09	MT	Front	Terrain cab wagon closed 4WD ERH		Propshaft	PS900292
Commander							
3.7 (157 kw)	2005.06-2010.12	AT	Front	SUV 4WD EKG	Model year from:2007;for OE No.:52853431AA	Propshaft	202101
	2005.06-2010.12	AT	Front	SUV 4WD EKG	Model year from:2007;for OE No.:52853432AA	Propshaft	202102
	2005.06-2010.12	AT	Front	SUV 4WD EKG	For Model year:2006;for OE No.:52105758AE	Propshaft	202280
	2005.06-2010.12	AT	Front	SUV 4WD EKG	For Model year:2006;for OE No.:52105728AE	Propshaft	202281
	2005.06-2010.12	AT	Rear	SUV 4WD EKG	Model year from:2006;for OE No.:52105760AF	Propshaft	PS901561

	YEAR	TRANSM.	FITTING POSITION	BODY STYLE & DRIVE TYPE & ENGINE	REMARKS	PRODUCT	GSP Ref.
JEEP							
Commander							
3.7 (157 kw)	2005.06-2010.12	AT	Rear	SUV 4WD EKG	Model year from:2006;for OE No.:52853006AF	Propshaft	PS901562
	2005.06-2010.12	AT	Front	SUV 4WD EKG	Date from:2007.01,Trans. code:NV245/NV140	Joint,propshaft	802100
	2005.06-2010.12	AT	Front	SUV 4WD EKG	Date to:2006.12,Transfer Case ID:NV140/NV245	Joint,propshaft	816010
4.7 (170 kw)	2005.09-2010.12	AT	Front	SUV 4WD EVA	Model year from:2007,Model year to:2009;for OE No.:52853431AA	Propshaft	202101
	2005.09-2010.12	AT	Front	SUV 4WD EVA	Model year from:2007,Model year to:2009;for OE No.:52853432AA	Propshaft	202102
	2005.09-2010.12	AT	Front	SUV 4WD EVA	Model year from:2005,Model year to:2006	Propshaft	202281
	2005.09-2010.12	AT	Rear	SUV 4WD EVA	Model year from:2006,Model year to:2009;for OE No.:52105760AF	Propshaft	PS901561
	2005.09-2010.12	AT	Rear	SUV 4WD EVA	Model year from:2007,Model year to:2009;for OE No.:52853006AF	Propshaft	PS901562
	2005.09-2010.12	AT	Front	SUV 4WD EVA	Date from:2007.01	Joint,propshaft	802100
	2005.09-2010.12	AT	Front	SUV 4WD EVA	Date to:2006.12	Joint,propshaft	816010
4.7 (223 kw)	2008.01-2009.12	AT	Front	SUV 4WD EVE	for OE No.:52853431AA	Propshaft	202101
	2008.01-2009.12	AT	Front	SUV 4WD EVE	for OE No.:52853432AA	Propshaft	202102
	2008.01-2009.12	AT	Rear	SUV 4WD EVE	for OE No.:52105760AF	Propshaft	PS901561
	2008.01-2009.12	AT	Rear	SUV 4WD EVE	for OE No.:52853006AF	Propshaft	PS901562
5.7 (240 kw)	2005.09-2010.12	AT	Front	SUV 4WD EZB	Model year from:2007;for OE No.:52853431AA	Propshaft	202101
	2005.09-2010.12	AT	Front	SUV 4WD EZB	Model year from:2007;for OE No.:52853432AA	Propshaft	202102
	2005.09-2010.12	AT	Front	SUV 4WD EZB	Model year from:2005,Model year to:2006	Propshaft	202281
	2005.09-2010.12	AT	Rear	SUV 4WD EZB	Model year from:2006;for OE No.:52105760AF	Propshaft	PS901561
	2005.09-2010.12	AT	Rear	SUV 4WD EZB	Model year from:2007;for OE No.:52853006AF	Propshaft	PS901562
	2005.09-2010.12	AT	Front	SUV 4WD EZB	Date from:2007.01	Joint,propshaft	802100
	2005.09-2010.12	AT	Front	SUV 4WD EZB	Date to:2006.12	Joint,propshaft	816010
Compass							
2.0 (118 kw)	2006.08-		Rear	SUV 4WD ECN	Model year from:2007,Model year to:2017	Propshaft	PS900303
2.4 (125 kw)	2007.01-	AT	Rear	SUV 4WD ED3/EDG	Model year from:2007,Model year to:2017	Propshaft	PS900303
2.4 (128 kw)	2006.08-		Rear	SUV 4WD ED3	Model year from:2007,Model year to:2017	Propshaft	PS900303
Grand Cherokee							
2.7 (120 kw)	2001.09-2004.09	5AT	Front	Terrain cab wagon closed 4WD ENF		Propshaft	PS901352
	2001.09-2004.09	AT/MT	Front	Terrain cab wagon closed 4WD ENF	Date to:2004.09	Joint,propshaft	616005
	2001.09-2004.09	AT/MT	Rear	Terrain cab wagon closed 4WD ENF		Joint,propshaft	899032
	2001.10-2005.09	AT/MT	Rear	Terrain cab wagon closed 4WD DDAB		Joint,propshaft	899032
3.0 (132 kw)	2006.05-2010.12	5AT	Front	Terrain cab wagon closed 4WD EXL	Model year from:2007,Model year to:2009	Propshaft	202102
	2006.05-2010.12	AT	Front	Terrain cab wagon closed 4WD EXL	Model year from:2007,Model year to:2009	Propshaft	202101
	2006.05-2010.12	AT	Front	Terrain cab wagon closed 4WD EXL		Propshaft	PS901351
	2006.05-2010.12	AT	Rear	Terrain cab wagon closed 4WD EXL	Model year from:2007,Model year to:2009;for OE No.:52105760AF	Propshaft	PS901561
	2006.05-2010.12	AT	Rear	Terrain cab wagon closed 4WD EXL	Model year from:2007,Model year to:2009;for OE No.:52853006AF	Propshaft	PS901562
	2006.05-2010.12	AT	Rear	Terrain cab wagon closed 4WD EXL	Model year from:2007,Model year to:2009;for OE No.:52853003AF	Propshaft	PS901568
3.0 (140 kw)	2011.02-	AT	Front	SUV 4WD EXF	Model year from:2014,Model year to:2015	Propshaft	PS901378
	2011.02-	AT	Front	SUV 4WD EXF	For Model year:2019	Propshaft	PS901379
	2011.02-	8AT	Rear	SUV 4WD EXF	Model year from:2014,Model year to:2019,with ELECTRONIC LIMITED SLIP	Propshaft	PS901929
	2011.02-	8AT	Rear	SUV 4WD EXF	Model year from:2014,Model year to:2017,without ELECTRONIC LIMITED SLIP	Propshaft	PS901933
	2011.02-	AT	Rear	SUV 4WD EXF	Model year from:2014,Model year to:2018,with ELECTRONIC LIMITED SLIP	Propshaft	PS900281
	2011.02-	AT	Rear	SUV 4WD EXF	Model year from:2014,Model year to:2015,without ELECTRONIC LIMITED SLIP	Propshaft	PS901573
	2011.02-	AT	-	SUV 4WD EXF	Model year from:2014,Model year to:2018;for OE No.:52853642AD	Joint,propshaft	605140
	2011.02-	AT	-	SUV 4WD EXF	Model year from:2014,Model year to:2018;for OE No.:52123624AB	Joint,propshaft	699229
	2017.01-	AT	Front	SUV Van 4WD EXF	For Model year:2019	Propshaft	PS901379
	2017.01-		Rear	SUV Van 4WD EXF	Model year from:2014,Model year to:2018	Propshaft	PS900281
	2017.01-		-	SUV Van 4WD EXF	Model year from:2014,Model year to:2018	Joint,propshaft	699229
3.0 (155 kw)	2006.05-2010.12	AT	Front	Terrain cab wagon closed 4WD EXL	Model year from:2007,Model year to:2009	Propshaft	202101
	2006.05-2010.12	AT	Front	Terrain cab wagon closed 4WD EXL	Model year from:2007,Model year to:2009	Propshaft	202102
	2006.05-2010.12	AT	Front	Terrain cab wagon closed 4WD EXL		Propshaft	PS901351
	2006.05-2010.12	AT	Rear	Terrain cab wagon closed 4WD EXL	Model year from:2007,Model year to:2009;for OE No.:52105760AF	Propshaft	PS901561
	2006.05-2010.12	AT	Rear	Terrain cab wagon closed 4WD EXL	Model year from:2007,Model year to:2009;for OE No.:52853006AF	Propshaft	PS901562
	2006.05-2010.12	AT	Rear	Terrain cab wagon closed 4WD EXL	Model year from:2007,Model year to:2009;for OE No.:52853003AF	Propshaft	PS901568
3.0 (160 kw)	2005.06-2010.12	AT	Front	Terrain cab wagon closed 4WD EXL	Model year from:2007,Model year to:2009	Propshaft	202101
	2005.06-2010.12	AT	Front	Terrain cab wagon closed RWD EXL	Model year from:2007,Model year to:2009;for OE No.:52853431AA	Propshaft	202101
	2005.06-2010.12	AT	Front	Terrain cab wagon closed 4WD EXL	Model year from:2007,Model year to:2009	Propshaft	202102
	2005.06-2010.12	AT	Front	Terrain cab wagon closed RWD EXL	Model year from:2007,Model year to:2009;for OE No.:52853432AA	Propshaft	202102
	2005.06-2010.12	AT	Front	Terrain cab wagon closed 4WD EXL		Propshaft	PS901351
	2005.06-2010.12	AT	Rear	Terrain cab wagon closed 4WD EXL	Model year from:2007,Model year to:2009;for OE No.:52105760AF	Propshaft	PS901561
	2005.06-2010.12	AT	Rear	Terrain cab wagon closed RWD EXL	Model year from:2007,Model year to:2009;for OE No.:52105760AF	Propshaft	PS901561
	2005.06-2010.12	AT	Rear	Terrain cab wagon closed 4WD EXL	Model year from:2007,Model year to:2009;for OE No.:52853006AF	Propshaft	PS901562
	2005.06-2010.12	AT	Rear	Terrain cab wagon closed 4WD EXL	Model year from:2007,Model year to:2009;for OE No.:52853003AF	Propshaft	PS901568
	2005.06-2010.12	AT	Rear	Terrain cab wagon closed RWD EXL	Model year from:2007,Model year to:2009;for OE No.:52853003AF	Propshaft	PS901568
	2005.06-2010.12	AT	Rear	Terrain cab wagon closed 4WD EXL	for vehicles with automatic transmission	Joint,propshaft	899297

	YEAR	TRANSM.	FITTING POSITION	BODY STYLE & DRIVE TYPE & ENGINE	REMARKS	PRODUCT	GSP Ref.
JEEP **Grand Cherokee**							
3.0 (160 kw)	2011.01-	AT	Front	SUV 4WD EXF	Model year from:2014,Model year to:2015	Propshaft	PS901378
	2011.01-	AT	Front	SUV 4WD EXF	For Model year:2019	Propshaft	PS901379
	2011.01-	8AT	Rear	SUV 4WD EXF	Model year from:2014,Model year to:2019,with ELECTRONIC LIMITED SLIP	Propshaft	PS901929
	2011.01-	8AT	Rear	SUV 4WD EXF	Model year from:2014,Model year to:2017,without ELECTRONIC LIMITED SLIP	Propshaft	PS901933
	2011.01-	AT	Rear	SUV 4WD EXF	Model year from:2014,Model year to:2018,with ELECTRONIC LIMITED SLIP	Propshaft	PS900281
	2011.01-	AT	Rear	SUV 4WD EXF	Model year from:2014,Model year to:2015,without ELECTRONIC LIMITED SLIP	Propshaft	PS901573
	2011.01-	AT	-	SUV 4WD EXF	Model year from:2014,Model year to:2015;for OE No.:52853642AD	Joint,propshaft	605140
	2011.01-	AT	-	SUV 4WD EXF	Model year from:2014,Model year to:2018;for OE No.:52123624AB	Joint,propshaft	699229
3.0 (165 kw)	2005.03-2011.10	5AT	Front	Closed Off-Road Vehicle 4WD EXL	Model year from:2007,Model year to:2009	Propshaft	202101
	2005.03-2011.10	5AT	Front	Closed Off-Road Vehicle 4WD EXL	Model year from:2007,Model year to:2009	Propshaft	202102
	2005.03-2011.10	AT	Front	Closed Off-Road Vehicle 4WD EXL		Propshaft	PS901351
	2005.03-2011.10		Rear	Closed Off-Road Vehicle 4WD EXL	Model year from:2007,Model year to:2009;for OE No.:52105760AF	Propshaft	PS901561
	2005.03-2011.10		Rear	Closed Off-Road Vehicle 4WD EXL	Model year from:2007,Model year to:2009;for OE No.:52853006AF	Propshaft	PS901562
	2005.03-2011.10		Rear	Closed Off-Road Vehicle 4WD EXL	Model year from:2007,Model year to:2009;for OE No.:52853003AF	Propshaft	PS901568
3.0 (175 kw)	2014.09-	AT	Rear	SUV 4WD EHD	Model year to:2015	Propshaft	PS900284
3.0 (177 kw)	2011.02-	AT	Front	SUV 4WD EXF	Model year from:2014,Model year to:2015	Propshaft	PS901378
	2011.02-	AT	Front	SUV 4WD EXF	For Model year:2019	Propshaft	PS901379
	2011.02-	8AT	Rear	SUV 4WD EXF	Model year from:2014,Model year to:2019,with ELECTRONIC LIMITED SLIP	Propshaft	PS901929
	2011.02-	8AT	Rear	SUV 4WD EXF	Model year from:2014,Model year to:2017,without ELECTRONIC LIMITED SLIP	Propshaft	PS901933
	2011.02-	AT	Rear	SUV 4WD EXF	Model year from:2014,Model year to:2018,with ELECTRONIC LIMITED SLIP	Propshaft	PS900281
	2011.02-	AT	Rear	SUV 4WD EXF	Model year from:2014,Model year to:2015,without ELECTRONIC LIMITED SLIP	Propshaft	PS901573
	2011.02-	AT	-	SUV 4WD EXF	Model year from:2014,Model year to:2015;for OE No.:52853642AD	Joint,propshaft	605140
	2011.02-	AT	-	SUV 4WD EXF	Model year from:2014,Model year to:2018;for OE No.:52123624AB	Joint,propshaft	699229
3.0 (179 kw)	2013.09-		Front	SUV RWD EXF	For Model year:2019	Propshaft	PS901379
	2013.09-		Rear	SUV RWD EXF	Model year from:2014,Model year to:2015	Propshaft	PS901573
	2013.09-		-	SUV RWD EXF	Model year from:2014,Model year to:2015	Joint,propshaft	605140
	2014.04-		Front	SUV 4WD EXF, EXN	Model year from:2014,Model year to:2015	Propshaft	PS901378
	2014.04-		Front	SUV 4WD EXF, EXN	For Model year:2019	Propshaft	PS901379
	2014.04-		Rear	SUV 4WD EXF, EXN	Model year to:2018;for OE No.:52123624AB	Propshaft	PS900281
	2014.04-		Rear	SUV 4WD EXF, EXN	Model year to:2015;for OE No.:68206210AD	Propshaft	PS901573
	2014.04-		-	SUV 4WD EXF, EXN	Model year from:2014,Model year to:2015;for OE No.:52853642AD	Joint,propshaft	605140
	2014.04-		-	SUV 4WD EXF, EXN	Model year to:2018;for OE No.:52123624AB	Joint,propshaft	699229
3.0 (184 kw)	2013.07-	AT	Front	SUV 4WD EXF	Model year from:2014,Model year to:2015	Propshaft	PS901378
	2013.07-	AT	Front	SUV 4WD EXF	For Model year:2019	Propshaft	PS901379
	2013.07-	AT	Front	SUV Van 4WD EXF	For Model year:2019	Propshaft	PS901379
	2013.07-		Rear	SUV Van 4WD EXF	Model year from:2014,Model year to:2018;for OE No.:52123624AB	Propshaft	PS900281
	2013.07-		Rear	SUV Van 4WD EXF	Model year from:2014,Model year to:2015;for OE No.:68206210AD	Propshaft	PS901573
	2013.07-	8AT	Rear	SUV 4WD EXF	Model year from:2014,Model year to:2019,with ELECTRONIC LIMITED SLIP	Propshaft	PS901929
	2013.07-	8AT	Rear	SUV 4WD EXF	Model year from:2014,Model year to:2017,without ELECTRONIC LIMITED SLIP	Propshaft	PS901933
	2013.07-	AT	Rear	SUV 4WD EXF	Model year from:2014,Model year to:2018,with ELECTRONIC LIMITED SLIP	Propshaft	PS900281
	2013.07-	AT	Rear	SUV 4WD EXF	Model year from:2014,Model year to:2015,without ELECTRONIC LIMITED SLIP	Propshaft	PS901573
	2013.07-		-	SUV Van 4WD EXF	Model year from:2014,Model year to:2018;for OE No.:52123624AB	Joint,propshaft	699229
	2013.07-	AT	-	SUV 4WD EXF	Model year from:2014,Model year to:2015;for OE No.:52853642AD	Joint,propshaft	605140
	2013.07-	AT	-	SUV 4WD EXF	Model year from:2014,Model year to:2018;for OE No.:52123624AB	Joint,propshaft	699229
3.1 (103 kw)	1998.10-2002.03	4AT	Front	Terrain cab wagon closed 4WD EXA		Propshaft	PS901352
	1998.10-2002.03	AT/MT	Rear	Terrain cab wagon closed 4WD EXA		Joint,propshaft	899032
3.6 (207 kw)	2010.11-	AT	Rear	SUV 4WD ERB	For Model year:2011	Propshaft	PS901569
3.6 (209 kw)	2010.11-	AT	Rear	SUV RWD ERB	For Model year:2011	Propshaft	PS901569
3.6 (210 kw)	2010.11-	AT	Rear	SUV 4WD ERB/ERC	For Model year:2011	Propshaft	PS901569
	2010.11-2013.12	AT	Front	SUV 4WD ERB	Model year from:2011,Model year to:2022	Propshaft	PS901378
	2010.11-2013.12	AT	Front	SUV 4WD ERB	Model year from:2011,Model year to:2022	Propshaft	PS901379
	2010.11-2013.12	8AT	Rear	SUV 4WD ERB	Model year from:2014,Model year to:2022,with ELECTRONIC LIMITED SLIP	Propshaft	PS901929
	2010.11-2013.12	8AT	Rear	SUV 4WD ERB	Model year from:2014,Model year to:2017,without ELECTRONIC LIMITED SLIP	Propshaft	PS901933
	2010.11-2013.12	AT	Rear	SUV 4WD ERB	Model year from:2016,Model year to:2021,with ELECTRONIC LIMITED SLIP	Propshaft	PS900281
	2010.11-2013.12	AT	Rear	SUV 4WD ERB	Model year from:2014,Model year to:2021,without ELECTRONIC LIMITED SLIP	Propshaft	PS900284
	2010.11-2013.12	AT	Rear	SUV 4WD ERB	For Model year:2011	Propshaft	PS901569
	2010.11-2013.12	AT	Rear	SUV 4WD ERB	For Model year:2011	Propshaft	PS901571
	2010.11-2013.12	AT	Rear	SUV 4WD ERB	Model year from:2014,Model year to:2022,without ELECTRONIC LIMITED SLIP	Propshaft	PS901573
	2010.11-2013.12	AT	-	SUV 4WD ERB	Model year from:2011,Model year to:2022;for OE No.:52853642AD	Joint,propshaft	605140
	2010.11-2013.12	AT	-	SUV 4WD ERB	Model year from:2011,Model year to:2022;for OE No.:52853641AD	Joint,propshaft	605143
3.6 (213 kw)	2010.10-		Rear	SUV RWD ERB, ERC	For Model year:2011	Propshaft	PS901569
3.7 (148 kw)	2006.10-2010.12	5AT	Front	Terrain cab wagon closed 4WD EKG	for OE No.:52853432AA	Propshaft	202102
	2006.10-2010.12	AT	Front	Terrain cab wagon closed 4WD EKG	for OE No.:52853431AA	Propshaft	202101
	2006.10-2010.12	AT	Rear	Terrain cab wagon closed 4WD EKG	for OE No.:52105760AF	Propshaft	PS901561

	YEAR	TRANSM.	FITTING POSITION	BODY STYLE & DRIVE TYPE & ENGINE	REMARKS	PRODUCT	GSP Ref.
JEEP **Grand Cherokee**							
3.7 (148 kw)	2006.10-2010.12	AT	Rear	Terrain cab wagon closed 4WD EKG	for OE No.:52853006AF	Propshaft	PS901562
	2006.10-2010.12	AT	Rear	Terrain cab wagon closed 4WD EKG	for OE No.:52853003AF	Propshaft	PS901568
3.7 (157 kw)	2004.10-2010.12	5AT	Front	Terrain cab wagon closed RWD EKG	Model year from:2007;for OE No.:52853431AA	Propshaft	202101
	2004.10-2010.12	5AT	Front	Terrain cab wagon closed RWD EKG	Model year from:2007;for OE No.:52853432AA	Propshaft	202102
	2004.10-2010.12	AT	Front	Terrain cab wagon closed 4WD EKG	Model year from:2007;for OE No.:52853431AA	Propshaft	202101
	2004.10-2010.12	AT	Front	Terrain cab wagon closed 4WD EKG	Model year from:2007;for OE No.:52853432AA	Propshaft	202102
	2004.10-2010.12	AT	Front	Terrain cab wagon closed 4WD EKG	Model year from:2005,Model year to:2006;for OE No.:52105758AE	Propshaft	202280
	2004.10-2010.12	AT	Front	Terrain cab wagon closed RWD EKG	Model year from:2005,Model year to:2006;for OE No.:52105758AE	Propshaft	202280
	2004.10-2010.12	AT	Front	Terrain cab wagon closed 4WD EKG	Model year from:2006,Model year to:2006;for OE No.:52105728AE	Propshaft	202281
	2004.10-2010.12	AT	Front	Terrain cab wagon closed RWD EKG	Model year from:2006,Model year to:2006;for OE No.:52105728AE	Propshaft	202281
	2004.10-2010.12	AT	Rear	Terrain cab wagon closed 4WD EKG	Model year from:2006;for OE No.:52105760AF	Propshaft	PS901561
	2004.10-2010.12	AT	Rear	Terrain cab wagon closed RWD EKG	Model year from:2006;for OE No.:52105760AF	Propshaft	PS901561
	2004.10-2010.12	AT	Rear	Terrain cab wagon closed 4WD EKG	Model year from:2005;for OE No.:52853006AF	Propshaft	PS901562
	2004.10-2010.12	AT	Rear	Terrain cab wagon closed 4WD EKG	Model year from:2007;for OE No.:52853003AF	Propshaft	PS901568
	2004.10-2010.12	AT	Rear	Terrain cab wagon closed RWD EKG	Model year from:2007;for OE No.:52853003AF	Propshaft	PS901568
	2004.10-2010.12	AT	Front	Terrain cab wagon closed 4WD EKG	Date from:2007.01,Trans. code:NV245/NV140	Joint,propshaft	802100
	2004.10-2010.12	AT	Front	Terrain cab wagon closed 4WD EKG	Date from:2005.01,Date to:2006.12,Transfer Case ID:NV140/NV245	Joint,propshaft	816010
	2004.10-2010.12		-	Terrain cab wagon closed 4WD EKG		Joint,propshaft	899297
4.0 (138 kw)	1994.09-1998.12		Front	Closed Off-Road Vehicle 4WD ERH		Joint,propshaft	616011
4.0 (140 kw)	1998.10-2004.09	AT	Front	Terrain cab wagon closed RWD ERH	Model year from:2001	Propshaft	201782
	1998.10-2004.09		Rear	Terrain cab wagon closed RWD ERH	Model year from:1999;for OE No.:52853088AA	Propshaft	PS901564
	1998.10-2004.09		Rear	Terrain cab wagon closed RWD ERH	Model year from:2001;for OE No.:52111483AD	Propshaft	PS901566
	1998.10-2004.09	AT/MT	Rear	Terrain cab wagon closed RWD ERH	Date from:1999.01	Joint,propshaft	899032
	1998.10-2004.12	AT	Front	Terrain cab wagon closed 4WD ERH	Model year from:2001,Model year to:2004;for OE No.:52105884AA	Propshaft	201782
	1998.10-2004.12	AT	Front	Terrain cab wagon closed 4WD ERH	Date to:2004.12;for OE No.:52099497AD	Propshaft	202440
	1998.10-2004.12	AT	Rear	Terrain cab wagon closed 4WD ERH	Model year from:2001,Model year to:2004;for OE No.:52111483AD	Propshaft	PS901566
	1998.10-2004.12	AT	Rear	Terrain cab wagon closed 4WD ERH	Model year to:2004;for OE No.:52105530AF	Propshaft	PS901567
	1998.10-2004.12	AT/MT	Front	Terrain cab wagon closed 4WD ERH	Date to:2004.12	Joint,propshaft	616005
	1998.10-2004.12	AT/MT	Front	Terrain cab wagon closed 4WD ERH	Date to:2004.12;Date from:2000.12,Ch. No.:WJ	Joint,propshaft	816010
	1998.10-2004.12	AT/MT	Rear	Terrain cab wagon closed 4WD ERH		Joint,propshaft	899032
4.7 (162 kw)	1999.02-2001.08	AT	Front	Terrain cab wagon closed 4WD EVA		Propshaft	202440
	1999.02-2001.08	AT	Rear	Terrain cab wagon closed 4WD EVA		Propshaft	PS901563
	1999.02-2001.08		Front	Terrain cab wagon closed 4WD EVA		Joint,propshaft	816010
	1999.02-2001.08	AT/MT	Rear	Terrain cab wagon closed 4WD EVA		Joint,propshaft	899032
4.7 (164 kw)	1999.04-2004.09	AT	Front	Terrain cab wagon closed 4WD EVA	Date to:2004.09;for OE No.:52099497AD	Propshaft	202440
	1999.04-2004.09	AT	Front	Terrain cab wagon closed 4WD EVA	Model year to:2004;for OE No.:52099498AD	Propshaft	202442
	1999.04-2004.09	AT	Front	Terrain cab wagon closed 4WD EVA	Model year from:2001,Model year to:2004;for OE No.:52853500AB	Propshaft	PS900280
	1999.04-2004.09	AT	Rear	Terrain cab wagon closed 4WD EVA	Model year to:2004;for OE No.:52099487AF	Propshaft	PS901563
	1999.04-2004.09	AT	Rear	Terrain cab wagon closed 4WD EVA	Model year from:2001,Model year to:2003;for OE No.:52105973AA	Propshaft	PS901565
	1999.04-2004.09		Front	Terrain cab wagon closed 4WD EVA	Date to:2004.09	Joint,propshaft	816010
	1999.04-2004.09	AT/MT	Front	Terrain cab wagon closed 4WD EVA	Date to:2004.09	Joint,propshaft	616005
	1999.04-2004.09	AT/MT	Rear	Terrain cab wagon closed 4WD EVA	Date from:2001.01	Joint,propshaft	899032
	2004.10-2007.09	AT	Front	Terrain cab wagon closed 4WD EVA	Model year from:2007,Model year to:2009;for OE No.:52853431AA	Propshaft	202101
	2004.10-2007.09	AT	Front	Terrain cab wagon closed 4WD EVA	Model year from:2007,Model year to:2009;for OE No.:52853432AA	Propshaft	202102
	2004.10-2007.09	AT	Front	Terrain cab wagon closed 4WD EVA	Model year to:2006	Propshaft	202281
	2004.10-2007.09	AT	Rear	Terrain cab wagon closed 4WD EVA	Model year to:2009;for OE No.:52105760AF	Propshaft	PS901561
	2004.10-2007.09	AT	Rear	Terrain cab wagon closed 4WD EVA	Model year from:2007,Model year to:2009;for OE No.:52853006AF	Propshaft	PS901562
	2004.10-2007.09	AT	Rear	Terrain cab wagon closed 4WD EVA	Model year from:2007,Model year to:2009;for OE No.:52853003AF	Propshaft	PS901568
4.7 (167 kw)	2003.06-2004.09	AT	Front	Terrain cab wagon closed 4WD EVA	Date to:2004.09;for OE No.:52099497AD	Propshaft	202440
	2003.06-2004.09	AT	Front	Terrain cab wagon closed 4WD EVA	Model year to:2004;for OE No.:52099498AD	Propshaft	202442
	2003.06-2004.09	AT	Front	Terrain cab wagon closed 4WD EVA	Model year from:2001,Model year to:2004;for OE No.:52853500AB	Propshaft	PS900280
	2003.06-2004.09	AT	Rear	Terrain cab wagon closed 4WD EVA	Model year to:2004	Propshaft	PS901563
	2003.06-2004.09		Front	Terrain cab wagon closed 4WD EVA	Date to:2004.09	Joint,propshaft	816010
	2003.06-2004.09	AT/MT	Front	Terrain cab wagon closed 4WD EVA	Date to:2004.09	Joint,propshaft	616005
	2004.10-2010.05	AT	Front	Terrain cab wagon closed RWD EVA/EVE	Model year from:2007,Model year to:2009;for OE No.:52853431AA	Propshaft	202101
	2004.10-2010.05	AT	Front	Terrain cab wagon closed RWD EVA/EVE	Model year from:2007,Model year to:2009;for OE No.:52853432AA	Propshaft	202102
	2004.10-2010.05	AT	Front	Terrain cab wagon closed RWD EVA/EVE	Model year from:2005,Model year to:2006	Propshaft	202281
	2004.10-2010.05	AT	Rear	Terrain cab wagon closed RWD EVA/EVE	Model year from:2005,Model year to:2009;for OE No.:52105760AF	Propshaft	PS901561
	2007.10-2010.05	5AT	Front	Terrain cab wagon closed 4WD EVE	Model year to:2008;for OE No.:52853432AA	Propshaft	202102
	2007.10-2010.05	AT	Front	Terrain cab wagon closed 4WD EVE	Model year to:2008;for OE No.:52853431AA	Propshaft	202101
	2007.10-2010.05	AT	Rear	Terrain cab wagon closed 4WD EVE	Model year to:2009;for OE No.:52105760AF	Propshaft	PS901561
	2007.10-2010.05	AT	Rear	Terrain cab wagon closed 4WD EVE	Model year to:2009;for OE No.:52853006AF	Propshaft	PS901562
	2007.10-2010.05	AT	Rear	Terrain cab wagon closed 4WD EVE	Model year to:2009;for OE No.:52853003AF	Propshaft	PS901568

	YEAR	TRANSM.	FITTING POSITION	BODY STYLE & DRIVE TYPE & ENGINE	REMARKS	PRODUCT	GSP Ref.
JEEP **Grand Cherokee**							
4.7 (170 kw)	2005.06-2010.12	AT	Front	Terrain cab wagon closed 4WD EVE	Model year from:2007,Model year to:2009;for OE No.:52853431AA	Propshaft	202101
	2005.06-2010.12	AT	Front	Terrain cab wagon closed 4WD EVE	Model year from:2007,Model year to:2009;for OE No.:52853432AA	Propshaft	202102
	2005.06-2010.12	AT	Front	Terrain cab wagon closed 4WD EVE	Model year to:2006	Propshaft	202281
	2005.06-2010.12	AT	Rear	Terrain cab wagon closed 4WD EVE	Model year to:2009;for OE No.:52105760AF	Propshaft	PS901561
	2005.06-2010.12	AT	Rear	Terrain cab wagon closed 4WD EVE	Model year from:2007,Model year to:2009;for OE No.:52853006AF	Propshaft	PS901562
	2005.06-2010.12	AT	Rear	Terrain cab wagon closed 4WD EVE	Model year from:2007,Model year to:2009;for OE No.:52853003AF	Propshaft	PS901568
	2005.06-2010.12	AT	Front	Terrain cab wagon closed 4WD EVE	Date from:2007.01	Joint,propshaft	802100
	2005.06-2010.12	AT	Front	Terrain cab wagon closed 4WD EVE	Date to:2006.12	Joint,propshaft	816010
	2005.06-2010.12		-	Terrain cab wagon closed 4WD EVE		Joint,propshaft	899297
4.7 (172 kw)	1998.09-2004.08	AT	Front	Closed Off-Road Vehicle 4WD EVA	for OE No.:52099498AD	Propshaft	202442
	1998.09-2004.08	AT	Front	Closed Off-Road Vehicle 4WD EVA	Model year from:2001;for OE No.:52853500AB	Propshaft	PS900280
	1998.09-2004.08		Rear	Closed Off-Road Vehicle 4WD EVA	Model year from:1999;for OE No.:52099487AF	Propshaft	PS901563
	1998.09-2004.08		Rear	Closed Off-Road Vehicle 4WD EVA	Model year from:2001,Model year to:2003;for OE No.:52105973AA	Propshaft	PS901565
4.7 (190 kw)	2001.09-2004.09	AT	Front	Terrain cab wagon closed 4WD EVC	Date to:2004.09;for OE No.:52099497AD	Propshaft	202440
	2001.09-2004.09	AT	Front	Terrain cab wagon closed 4WD EVC	Model year to:2004;for OE No.:52099498AD	Propshaft	202442
	2001.09-2004.09	AT	Front	Terrain cab wagon closed 4WD EVC	Model year from:2001,Model year to:2004;for OE No.:52853500AB	Propshaft	PS900280
	2001.09-2004.09	AT	Rear	Terrain cab wagon closed 4WD EVC	Model year to:2004;for OE No.:52099487AF	Propshaft	PS901563
	2001.09-2004.09	AT	Rear	Terrain cab wagon closed 4WD EVC	Model year to:2003;for OE No.:52105973AA	Propshaft	PS901565
	2001.09-2004.09		Front	Terrain cab wagon closed 4WD EVC	Date to:2004.09	Joint,propshaft	816010
	2001.09-2004.09	AT/MT	Front	Terrain cab wagon closed 4WD EVC	Date to:2004.09	Joint,propshaft	616005
	2001.09-2004.09	AT/MT	Rear	Terrain cab wagon closed 4WD EVC		Joint,propshaft	899032
4.7 (223 kw)	2007.09-2010.02	5AT	Front	Terrain cab wagon closed 4WD EVA/EVE	Model year to:2008;for OE No.:52853431AA	Propshaft	202101
	2007.09-2010.02	5AT	Front	Terrain cab wagon closed 4WD EVA/EVE	Model year to:2008;for OE No.:52853432AA	Propshaft	202102
	2007.09-2010.02	AT	Rear	Terrain cab wagon closed 4WD EVA/EVE	Model year to:2009;for OE No.:52105760AF	Propshaft	PS901561
	2007.09-2010.02	AT	Rear	Terrain cab wagon closed 4WD EVA/EVE	Model year to:2009;for OE No.:52853006AF	Propshaft	PS901562
	2007.09-2010.02	AT	Rear	Terrain cab wagon closed 4WD EVA/EVE	Model year to:2009;for OE No.:52853003AF	Propshaft	PS901568
5.2 (136 kw)	1996.10-1998.09	4AT	Front	Terrain cab wagon closed 4WD ELF	Model year from:1997	Propshaft	PS900279
5.2 (155 kw)	1992.09-1998.09	4AT	Front	Terrain cab wagon closed 4WD ELF	Model year from:1997,Model year to:1998	Propshaft	PS900279
5.2 (156 kw)	1995.10-1998.09	4AT	Front	Terrain cab wagon closed 4WD ELF	Model year from:1997,Model year to:1998	Propshaft	PS900279
	1995.10-1998.09		Front	Terrain cab wagon closed 4WD ELF		Joint,propshaft	616011
5.2 (158 kw)	1992.09-1998.09	4AT	Front	Terrain cab wagon closed 4WD ELF	Model year from:1997	Propshaft	PS900279
	1992.09-1998.09	AT	Rear	Terrain cab wagon closed 4WD ELF	Date from:1996.01	Propshaft	PS901752
5.2 (164 kw)	1992.09-1998.12	4AT	Front	Terrain cab wagon closed 4WD ELF	Model year from:1997	Propshaft	PS900279
5.7 (240 kw)	2004.10-2010.12	AT	Front	Terrain cab wagon closed 4WD EZB	Model year from:2007;for OE No.:52853431AA	Propshaft	202101
	2004.10-2010.12	AT	Front	Terrain cab wagon closed 4WD EZB	Model year from:2007;for OE No.:52853432AA	Propshaft	202102
	2004.10-2010.12	AT	Front	Terrain cab wagon closed 4WD EZB	Model year to:2006	Propshaft	202281
	2004.10-2010.12	AT	Rear	Terrain cab wagon closed 4WD EZB	for OE No.:52105760AF	Propshaft	PS901561
	2004.10-2010.12	AT	Rear	Terrain cab wagon closed 4WD EZB	Model year from:2007;for OE No.:52853006AF	Propshaft	PS901562
	2004.10-2010.12	AT	Rear	Terrain cab wagon closed 4WD EZB	Model year from:2007;for OE No.:52853003AF	Propshaft	PS901568
	2004.10-2010.12	AT	Front	Terrain cab wagon closed 4WD EZB	Date from:2007.01	Joint,propshaft	802100
	2004.10-2010.12	AT	Front	Terrain cab wagon closed 4WD EZB	Date to:2006.12	Joint,propshaft	816010
	2004.10-2010.12	AT	Rear	Terrain cab wagon closed 4WD EZB		Joint,propshaft	899297
5.7 (259 kw)	2009.01-2010.12	AT	Front	Terrain cab wagon closed 4WD EZD	for OE No.:52853431AA	Propshaft	202101
	2009.01-2010.12	AT	Front	Terrain cab wagon closed 4WD EZD	for OE No.:52853432AA	Propshaft	202102
	2009.01-2010.12	AT	Rear	Terrain cab wagon closed 4WD EZD	for OE No.:52105760AF	Propshaft	PS901561
	2009.01-2010.12	AT	Rear	Terrain cab wagon closed 4WD EZD	for OE No.:52853006AF	Propshaft	PS901562
	2009.01-2010.12	AT	Rear	Terrain cab wagon closed 4WD EZD	for OE No.:52853003AF	Propshaft	PS901568
	2010.11-	AT	Front	SUV 4WD EZH	Model year from:2011,Model year to:2021	Propshaft	PS901379
	2010.11-	5AT	Rear	SUV 4WD EZH	Model year to:2013,without ELECTRONIC LIMITED SLIP	Propshaft	PS901932
	2010.11-	8AT	Rear	SUV 4WD EZH	Model year from:2014,Model year to:2021,with ELECTRONIC LIMITED SLIP	Propshaft	PS901929
	2010.11-	8AT	Rear	SUV 4WD EZH	Model year from:2014,Model year to:2017,without ELECTRONIC LIMITED SLIP	Propshaft	PS901933
	2010.11-	AT	Rear	SUV 4WD EZH	Model year to:2021,with ELECTRONIC LIMITED SLIP	Propshaft	PS900281
	2010.11-	AT	Rear	SUV 4WD EZH	For Model year:2011	Propshaft	PS901570
	2010.11-	AT	-	SUV 4WD EZH	Model year from:2011,Model year to:2021	Joint,propshaft	605143
	2013.07-	AT	Front	SUV Van 4WD EZH	Model year to:2021	Propshaft	PS901379
	2013.07-	AT	-	SUV Van 4WD EZH	Model year to:2021	Joint,propshaft	605143
5.7 (265 kw)	2009.01-2010.05	AT	Front	Terrain cab wagon closed 4WD EZD	for OE No.:52853431AA	Propshaft	202101
	2009.01-2010.05	AT	Front	Terrain cab wagon closed 4WD EZD	for OE No.:52853432AA	Propshaft	202102
	2009.01-2010.05	AT	Rear	Terrain cab wagon closed 4WD EZD	for OE No.:52105760AF	Propshaft	PS901561
	2009.01-2010.05	AT	Rear	Terrain cab wagon closed 4WD EZD	for OE No.:52853006AF	Propshaft	PS901562
	2009.01-2010.05	AT	Rear	Terrain cab wagon closed 4WD EZD	for OE No.:52853003AF	Propshaft	PS901568
	2013.05-	AT	Front	SUV 4WD EZH	Model year to:2021	Propshaft	PS901379
	2013.05-	8AT	Rear	SUV 4WD EZH	Model year from:2014,Model year to:2021,with ELECTRONIC LIMITED SLIP	Propshaft	PS901929
	2013.05-	8AT	Rear	SUV 4WD EZH	Model year from:2014,Model year to:2017,without ELECTRONIC LIMITED SLIP	Propshaft	PS901933

	YEAR	TRANSM.	FITTING POSITION	BODY STYLE & DRIVE TYPE & ENGINE	REMARKS	PRODUCT	GSP Ref.
JEEP							
Grand Cherokee							
5.7 (265 kw)	2013.05-	AT	Rear	SUV 4WD EZH	Model year to:2021,with ELECTRONIC LIMITED SLIP	Propshaft	PS900281
	2013.05-	AT	-	SUV 4WD EZH	Model year to:2021	Joint,propshaft	605143
5.7 (268 kw)	2014.01-	AT	Front	SUV 4WD EZH	Model year to:2021	Propshaft	PS901379
	2014.01-	AT	Rear	SUV 4WD EZH	Model year to:2021;for OE No.:52123627AA	Propshaft	PS900281
	2014.01-	AT	Rear	SUV 4WD EZH	For Model year:2011;for OE No.:52123514AD	Propshaft	PS901570
	2014.01-	AT	-	SUV 4WD EZH	Model year to:2021	Joint,propshaft	605143
5.7 (269 kw)	2009.01-2010.12	AT	Front	Closed Off-Road Vehicle 4WD EZH	for OE No.:52853431AA	Propshaft	202101
	2009.01-2010.12	AT	Front	Closed Off-Road Vehicle 4WD EZH	for OE No.:52853432AA	Propshaft	202102
	2009.01-2010.12		Rear	Closed Off-Road Vehicle 4WD EZH	for OE No.:52105760AF	Propshaft	PS901561
	2009.01-2010.12		Rear	Closed Off-Road Vehicle 4WD EZH	for OE No.:52853006AF	Propshaft	PS901562
	2009.01-2010.12		Rear	Closed Off-Road Vehicle 4WD EZH	for OE No.:52853003AF	Propshaft	PS901568
	2010.06-	AT	Rear	SUV RWD EZH	Date from:2011.01,Date to:2012.12,with 225 mm Rear Axle	Propshaft	PS901750
	2011.01-	AT	Front	SUV 4WD EZH	Model year to:2021	Propshaft	PS901379
	2011.01-		Rear	SUV 4WD EZH	For Model year:2011;for OE No.:52123514AD	Propshaft	PS901570
	2011.01-	AT	Rear	SUV 4WD EZH	Model year to:2021;for OE No.:52123627AA	Propshaft	PS900281
	2011.01-	AT	-	SUV 4WD EZH	Model year to:2021	Joint,propshaft	605143
5.9 (183 kw)	1997.09-1998.12	4AT	Front	Closed Off-Road Vehicle 4WD EML	For Model year:1998	Propshaft	PS900279
	1997.09-1998.12		Front	Closed Off-Road Vehicle 4WD EML		Joint,propshaft	616011
6.1 (313 kw)	2006.01-2010.12	5AT	Front	Terrain cab wagon closed 4WD ESF	Model year from:2007;for OE No.:52853432AA	Propshaft	202102
	2006.01-2010.12	AT	Front	Terrain cab wagon closed 4WD ESF	Model year from:2007;for OE No.:52853431AA	Propshaft	202101
	2006.01-2010.12	AT	Rear	Terrain cab wagon closed 4WD ESF	Model year from:2007;for OE No.:52105760AF	Propshaft	PS901561
	2006.01-2010.12	AT	Rear	Terrain cab wagon closed 4WD ESF	Model year from:2007;for OE No.:52853006AF	Propshaft	PS901562
	2006.01-2010.12	AT	Rear	Terrain cab wagon closed 4WD ESF	for OE No.:52853003AF	Propshaft	PS901568
	2006.01-2010.12	AT	Front	Terrain cab wagon closed 4WD ESF	Date from:2007.01	Joint,propshaft	802100
	2006.01-2010.12	AT	Front	Terrain cab wagon closed 4WD ESF	Date to:2006.12	Joint,propshaft	816010
	2006.01-2010.12		-	Terrain cab wagon closed 4WD ESF		Joint,propshaft	899297
	2006.10-2010.05	AT	Front	Terrain cab wagon closed RWD ESF	Model year from:2007;for OE No.:52853431AA	Propshaft	202101
	2006.10-2010.05	AT	Front	Terrain cab wagon closed RWD ESF	Model year from:2007;for OE No.:52853432AA	Propshaft	202102
	2006.10-2010.05	AT	Rear	Terrain cab wagon closed RWD ESF	Model year from:2007;for OE No.:52105760AF	Propshaft	PS901561
	2006.10-2010.05	AT	Rear	Terrain cab wagon closed RWD ESF	for OE No.:52853003AF	Propshaft	PS901568
6.2 (522 kw)	2017.09-	AT	Rear	SUV 4WD ESD	Model year from:2018,Model year to:2021	Propshaft	PS901574
6.2 (527 kw)	2018.07-		Rear	SUV 4WD ESD	Model year to:2021	Propshaft	PS901574
6.4 (344 kw)	2011.03-	AT	Front	SUV 4WD ESG	Model year from:2012,Model year to:2013	Propshaft	PS901453
	2011.03-	8AT	Rear	SUV 4WD ESG	Model year from:2012,Model year to:2013,without ELECTRONIC LIMITED SLIP	Propshaft	PS901933
6.4 (347 kw)	2014.09-	8AT	Rear	SUV 4WD ESG	Model year from:2012,Model year to:2013,without ELECTRONIC LIMITED SLIP	Propshaft	PS901933
6.4 (350 kw)	2011.09-	AT	Front	SUV 4WD ESG	Model year from:2012,Model year to:2013	Propshaft	PS901453
	2011.09-	8AT	Rear	SUV 4WD ESG	Model year from:2012,Model year to:2013,without ELECTRONIC LIMITED SLIP	Propshaft	PS901933
Grand Cherokee L							
3.6 (218 kw)	2021.06-		Rear	SUV 4WD ERC	Model year to:2022	Propshaft	PS901573
Liberty							
2.8 (130 kw)	2007.11-2012.08	AT	Front	Terrain cab wagon closed 4WD ENS	Model year to:2013	Propshaft	PS901579
3.7 (151 kw)	2008.01-2012.08	AT	Front	Terrain cab wagon closed 4WD EKG	Model year to:2012;for OE No.:52853442AF	Propshaft	202521
	2008.01-2012.08	AT	Front	Terrain cab wagon closed 4WD EKG	Model year to:2013;for OE No.:52853441AF	Propshaft	PS901579
3.7 (157 kw)	2001.09-2008.01	AT	Front	Terrain cab wagon closed RWD EKG	Model year to:2003;for OE No.:52111597AA	Propshaft	202443
	2001.09-2008.01	AT	Rear	Terrain cab wagon closed RWD EKG	For Model year:2002	Propshaft	PS901575
	2001.09-2008.01	AT	Rear	Terrain cab wagon closed RWD EKG	For Model year:2003	Propshaft	PS901578
	2007.09-2015.12	AT	Front	Terrain cab wagon closed 4WD EKG	for OE No.:52853442AF	Propshaft	202521
	2007.09-2015.12	AT	Front	Terrain cab wagon closed 4WD EKG	for OE No.:52853441AF	Propshaft	PS901579
Patriot							
2.0 (115 kw)	2007.02-2017.12	CVT/MT	Rear	Terrain cab wagon closed 4WD ECN		Propshaft	PS900303
2.4 (125 kw)	2007.01-2017.12	MT	Rear	Terrain cab wagon closed 4WD ED3/EDG		Propshaft	PS900303
2.4 (128 kw)	2008.09-2017.12		Rear	Terrain cab wagon closed 4WD ED3		Propshaft	PS900303
Renegade							
2.0 (88 kw)	2014.07-	MT	Rear	SUV 4WD EBT(55263087)		Propshaft	PS900623
2.0 (103 kw)	2014.07-		Rear	SUV 4WD 55283099/55284064/EBT(55263087)/EBT(55263088)		Propshaft	PS900623
2.0 (125 kw)	2014.07-	AT	Rear	SUV 4WD 55283099/EBT(55263088)		Propshaft	PS900623
Wrangler							
2.4 (105 kw)	2002.10-2006.02	MT	Front	Terrain cab open 4WD ED1	Model year from:2003,Model year to:2005	Propshaft	PS900300
	2002.10-2006.02	MT	Rear	Terrain cab open 4WD ED1	Model year from:2005,Model year to:2006;for OE No.:52098784AD	Propshaft	PS900298
	2002.10-2006.02	MT	Rear	Terrain cab open 4WD ED1	Model year from:2003,Model year to:2006;for OE No.:52853407AA	Propshaft	PS901581
2.4 (110 kw)	2002.09-2006.12		Rear	Open Off-Road Vehicle 4WD ED1	Model year from:2003	Propshaft	PS901581
2.5 (87 kw)	1996.08-2002.09	AT	Rear	Terrain cab open 4WD EPE	Model year from:1997,Model year to:2002	Propshaft	PS900302
3.6 (209 kw)	2011.10-	AT	Rear	Terrain cab open 4WD ERB	Model year from:2012,Model year to:2015	Propshaft	PS901927
	2011.10-		Rear	Terrain cab open 4WD ERB		Joint,propshaft	816011

	YEAR	TRANSM.	FITTING POSITION	BODY STYLE & DRIVE TYPE & ENGINE	REMARKS	PRODUCT	GSP Ref.
JEEP **Wrangler**							
3.8 (146 kw)	2007.10-		Front;Rear	Terrain cab open 4WD EGT		Joint,propshaft	816011
3.8 (151 kw)	2006.06-		Rear	Open Off-Road Vehicle 4WD EGT		Joint,propshaft	816011
3.8 (153 kw)	2006.02-2008.12	4AT	Rear	Terrain cab open 4WD EGT		Propshaft	PS901927
4.0 (124 kw)	1998.06-2007.04	5MT	Front	Terrain cab open 4WD ERH	Model year from:2001	Propshaft	PS900301
	1998.06-2007.04	MT	Rear	Terrain cab open 4WD ERH	Model year from:2001,Model year to:2006;for OE No.:52098784AD	Propshaft	PS900298
	1998.06-2007.04	MT	Rear	Terrain cab open 4WD ERH	Model year from:2001,Model year to:2006;for OE No.:52098787AD	Propshaft	PS900299
	1998.06-2007.04	MT	Rear	Terrain cab open 4WD ERH	Model year from:2004,Model year to:2006;for OE No.:52853160AA	Propshaft	PS901580
	1998.06-2007.04	MT	Rear	Terrain cab open 4WD ERH	For Model year:2004	Propshaft	PS901581
	1998.06-2007.04	MT	Rear	Terrain cab open 4WD ERH	Model year from:2005,Model year to:2006;for OE No.:56052585AA	Propshaft	PS901583
4.0 (128 kw)	1996.08-2007.01	AT/MT	Front	Terrain cab open 4WD ERH	Model year to:2006,COMMAND-TRAC PART TIME 4WD SYSTEM	Propshaft	PS900301
	1996.08-2007.01	AT/MT	Front	Terrain cab open 4WD ERH	Model year to:2006,4:1 ROCK-TRAC HD PART TIME 4WD SYSTEM	Propshaft	PS901928
	1996.08-2007.01		Rear	Terrain cab open 4WD ERH	Model year from:2004,Model year to:2006	Propshaft	PS901580
	1996.08-2007.01		Rear	Terrain cab open 4WD ERH	For Model year:2004	Propshaft	PS901581
	1996.08-2007.01		Rear	Terrain cab open 4WD ERH	Model year from:2005,Model year to:2006	Propshaft	PS901583
4.0 (130 kw)	1996.08-2007.04		Front	Terrain cab open 4WD ERH	Model year from:2001	Propshaft	PS900301
4.0 (131 kw)	1991.12-1996.08	MT	Rear	Terrain cab open 4WD ERH	Model year to:1993	Propshaft	PS901582
4.0 (134 kw)	1990.09-1995.12	MT	Rear	Open Off-Road Vehicle 4WD M400L	Model year from:1991,Model year to:1993	Propshaft	PS901582
4.0 (135 kw)	1996.09-2001.12	AT	Rear	Open Off-Road Vehicle 4WD ERH	Model year from:1997	Propshaft	PS900302
JEEP (BJC) **Grand Cherokee**							
4.0 (145 kw)	1999.02-2005.07		Rear	Closed Off-Road Vehicle 4WD C698QAI	Model year from:2001,Model year to:2004;for OE No.:52111483AD	Propshaft	PS901566
	1999.02-2005.07		Rear	Closed Off-Road Vehicle 4WD C698QAI	Model year to:2004;for OE No.:52105530AF	Propshaft	PS901567
4.7 (175 kw)	1999.02-2001.08		Rear	Closed Off-Road Vehicle 4WD C8V93Q		Propshaft	PS901563
JEEP (GAC FCA) **Cherokee**							
2.0 (195 kw)	2018.12-		Rear	SUV 4WD 463 38 538	Model year from:2019,Model year to:2022	Propshaft	PS901560
2.4 (129 kw)	2015.11-		Rear	SUV 4WD M080, M096	Model year to:2022	Propshaft	PS901560
KIA **Sorento**							
2.0 (110 kw)	2009.07-2015.12		Front;Rear	SUV 4WD D4HA		Center Bearing Support	539906
	2009.07-2015.12		Centre	SUV 4WD D4HA		Center Bearing Support	538624
	2009.07-2015.12		Centre	SUV 4WD D4HA		Center Bearing Support Kit	538685S
	2009.07-2015.12		Front;Rear	SUV 4WD D4HA		Flexible Coupling	533419
2.0 (135 kw)	2009.11-2015.12		Front;Rear	SUV 4WD D4HA		Flexible Coupling	533419
2.0 (136 kw)	2015.07-	AT	Rear	SUV 4WD D4HA	Model year from:2016,Model year to:2018	Propshaft	PS901585
2.0 (137 kw)	2015.07-2020.12	AT	Rear	SUV 4WD D4HA	Model year from:2016,Model year to:2018	Propshaft	PS901585
2.0 (177 kw)	2015.01-2018.12	AT	Rear	SUV 4WD G4KH	Model year from:2016,Model year to:2018	Propshaft	PS901585
2.2 (145 kw)	2009.11-2015.12	AT	Rear	SUV 4WD D4HB	Model year to:2014	Propshaft	PS901586
	2009.11-2015.12	AT	Rear	SUV Van 4WD D4HB	Model year to:2014	Propshaft	PS901586
	2009.11-2015.12		Front;Rear	SUV 4WD D4HB		Center Bearing Support	539906
	2009.11-2015.12		Centre	SUV 4WD D4HB		Center Bearing Support	538624
	2009.11-2015.12		Centre	SUV Van 4WD D4HB		Center Bearing Support	538624
	2009.11-2015.12		Centre	SUV 4WD D4HB		Center Bearing Support Kit	538685S
	2009.11-2015.12		Front;Rear	SUV 4WD D4HB		Flexible Coupling	533419
	2009.11-2015.12		Front;Rear	SUV Van 4WD D4HB		Flexible Coupling	533419
2.2 (147 kw)	2009.11-2015.12	AT	Rear	SUV 4WD D4HB	for OE No.:49300-2P500	Propshaft	PS900308
	2009.11-2015.12	AT	Rear	SUV 4WD D4HB	Model year to:2014;for OE No.:49300-2P100	Propshaft	PS901586
	2009.11-2015.12		Centre	SUV 4WD D4HB		Center Bearing Support	538624
	2009.11-2015.12		Front;Rear	SUV 4WD D4HB		Flexible Coupling	533419
2.4 (102 kw)	2002.07-2009.06	AT	Rear	SUV 4WD G4JS		Propshaft	PS901584
	2002.07-2009.06		Front;Rear	SUV 4WD G4JS		Center Bearing Support	539906
2.4 (126 kw)	2015.01-2020.10	AT	Rear	SUV 4WD G4KE	Model year from:2016,Model year to:2020	Propshaft	PS901585
2.4 (128 kw)	2009.06-2015.12		Front;Rear	SUV 4WD G4KE		Center Bearing Support	539906
	2009.06-2015.12		Centre	SUV 4WD G4KE		Center Bearing Support	538624
	2009.06-2015.12		Centre	SUV Van 4WD G4KE		Center Bearing Support	538624
	2009.06-2015.12		Centre	SUV 4WD G4KE		Center Bearing Support Kit	538685S
	2009.06-2015.12		Front;Rear	SUV 4WD G4KE		Flexible Coupling	533419
	2009.06-2015.12		Front;Rear	SUV Van 4WD G4KE		Flexible Coupling	533419
2.4 (129 kw)	2015.01-	AT	Rear	SUV 4WD G4KE	Model year from:2016,Model year to:2020	Propshaft	PS901585
2.4 (130 kw)	2010.09-2012.12		Front;Rear	SUV 4WD G4KE		Flexible Coupling	533419
2.4 (138 kw)	2015.01-	AT	Rear	SUV 4WD G4KJ	Model year from:2016,Model year to:2020	Propshaft	PS901585
2.4 (140 kw)	2017.07-2020.12	AT	Rear	SUV 4WD G4KJ	Model year to:2020	Propshaft	PS901585
2.4 (141 kw)	2012.10-2015.12	AT	Rear	SUV 4WD G4KJ		Propshaft	PS900308
	2012.10-2015.12		Centre	SUV 4WD G4KJ		Center Bearing Support	538624

	YEAR	TRANSM.	FITTING POSITION	BODY STYLE & DRIVE TYPE & ENGINE	REMARKS	PRODUCT	GSP Ref.
KIA							
Sorento							
2.4 (141 kw)	2012.10-2015.12		Front;Rear	SUV 4WD G4KJ		Flexible Coupling	533419
2.5 (103 kw)	2002.08-2011.03	AT	Front	SUV 4WD D4CB	for OE No.:49100-3E150	Propshaft	PS900310
	2002.08-2011.03	AT/MT	Front	SUV 4WD D4CB	for OE No.:49100-3E100	Propshaft	PS900561
	2002.08-2011.03	AT/MT	Rear	SUV 4WD D4CB		Propshaft	PS900598
	2002.08-2011.03		Centre	SUV RWD D4CB		Center Bearing Support	539045
2.5 (120 kw)	2006.09-2011.12	AT	Front	SUV 4WD D4CB		Propshaft	PS900309
	2006.09-2011.12	MT	Front	SUV 4WD D4CB		Propshaft	PS900599
	2006.09-2011.12	AT	Rear	SUV 4WD D4CB		Propshaft	PS900601
	2006.09-2011.12	MT	Rear	SUV 4WD D4CB		Propshaft	PS900600
2.5 (125 kw)	2006.09-2011.12	AT	Front	SUV 4WD D4CB		Propshaft	PS900309
	2006.09-2011.12	MT	Front	SUV 4WD D4CB		Propshaft	PS900599
	2006.09-2011.12	AT	Rear	SUV 4WD D4CB		Propshaft	PS900601
	2006.09-2011.12	MT	Rear	SUV 4WD D4CB		Propshaft	PS900600
2.5 (131 kw)	2006.09-2011.12		Centre	SUV RWD D4CB		Center Bearing Support	539045
3.3 (180 kw)	2007.09-2008.12	AT	Rear	SUV RWD G6DB		Propshaft	PS900306
	2008.09-2009.12	AT	Front	SUV 4WD G6DB		Propshaft	PS900604
	2008.09-2009.12	AT	Rear	SUV 4WD G6DB		Propshaft	PS901584
3.3 (182 kw)	2006.09-2011.12	AT	Front	SUV 4WD G6DB	Model year from:2008,Model year to:2009	Propshaft	PS900604
	2006.09-2011.12	AT	Rear	SUV 4WD G6DB	for OE No.:49100-3E910	Propshaft	PS900603
	2006.09-2011.12	AT	Rear	SUV 4WD G6DB	for OE No.:49100-3E461	Propshaft	PS901584
	2008.09-2009.12	AT	Rear	SUV RWD G6DB		Propshaft	PS900306
3.3 (184 kw)	2015.04-2020.12	AT	Rear	SUV 4WD G6DF	Model year from:2016,Model year to:2020	Propshaft	PS901585
3.3 (196 kw)	2015.01-2020.12	AT	Rear	SUV 4WD G6DF	Model year from:2016,Model year to:2020	Propshaft	PS901585
3.3 (199 kw)	2015.04-	AT	Rear	SUV 4WD G6DF	Model year from:2016,Model year to:2020	Propshaft	PS901585
3.5 (143 kw)	2002.07-2011.12	AT	Front	SUV 4WD G6CU	Model year from:2003,Model year to:2006;for OE No.:49100-3E050	Propshaft	PS900311
	2002.07-2011.12	AT	Front	SUV 4WD G6CU	Model year from:2003,Model year to:2006;for OE No.:49100-3E000	Propshaft	PS900605
	2002.07-2011.12	AT	Rear	SUV 4WD G6CU	Model year from:2003,Model year to:2006;for OE No.:49100-3E200	Propshaft	PS900312
	2002.07-2011.12	AT	Rear	SUV 4WD G6CU	for OE No.:49100-3E461	Propshaft	PS901584
	2002.07-2011.12		Centre	SUV 4WD G6CU		Center Bearing Support	538624
	2002.09-2006.12	AT	Rear	SUV RWD G6AU		Propshaft	PS901669
	2002.09-2006.12		Centre	SUV RWD G6AU		Center Bearing Support	539045
3.5 (158 kw)	2002.12-2008.12		Front	SUV 4WD	Model year from:2003,Model year to:2006;for OE No.:49100-3E000	Propshaft	PS900605
	2002.12-2008.12	AT	Front	SUV 4WD	Model year from:2003,Model year to:2006;for OE No.:49100-3E050	Propshaft	PS900311
	2002.12-2008.12	AT	Rear	SUV 4WD	Model year from:2003,Model year to:2006	Propshaft	PS900312
3.5 (203 kw)	2009.11-2015.12	AT	Rear	SUV 4WD G6DC	Model year from:2011,Model year to:2013	Propshaft	PS900265
	2009.11-2015.12		Front;Rear	SUV 4WD G6DC		Flexible Coupling	533419
3.5 (204 kw)	2013.05-2015.12		Centre	SUV 4WD G6DC		Center Bearing Support	538624
3.5 (206 kw)	2011.01-2015.12	AT	Rear	SUV 4WD G6DC	Model year to:2013	Propshaft	PS900265
	2011.01-2015.12		Front;Rear	SUV 4WD G6DC		Flexible Coupling	533419
3.8 (196 kw)	2006.09-2009.12	AT	Rear	SUV RWD G6DA	Model year from:2007	Propshaft	PS900306
	2006.09-2009.12		Centre	SUV RWD G6DA		Center Bearing Support	539045
	2006.09-2011.12	AT	Front	SUV 4WD G6DA	Model year from:2007,Model year to:2009	Propshaft	PS900604
	2006.09-2011.12	AT	Rear	SUV 4WD G6DA		Propshaft	PS901584
Sportage							
1.6 (130 kw)	2015.09-2022.09		Front;Rear	SUV 4WD G4FJ		Flexible Coupling	533419
2.0 (61 kw)	1997.10-2003.08	5MT	Front	SUV 4WD RF		Propshaft	PS901879
2.0 (83 kw)	2004.07-2010.05		Centre	SUV FWD D4EA		Center Bearing Support	538616
	2004.07-2010.05		Centre	SUV FWD D4EA		Center Bearing Support Kit	538686S
	2004.07-2011.05		Front;Rear	SUV 4WD D4EA		Center Bearing Support	539906
	2004.07-2011.05		Centre	SUV 4WD D4EA	Inner diameter:28mm	Center Bearing Support	538616
	2004.07-2011.05		Centre	SUV 4WD D4EA	Inner diameter:30mm	Center Bearing Support	538624
	2004.07-2011.05		Centre	SUV 4WD D4EA	Date from:2013.05,Date to:2014.01	Center Bearing Support Kit	538685S
	2004.07-2011.05		Centre	SUV 4WD D4EA	Date from:2006.09,Date to:2010.05	Center Bearing Support Kit	538686S
	2004.07-2011.05		Rear	SUV 4WD D4EA		Flexible Coupling	519580
2.0 (95 kw)	1998.11-2004.08		Centre	SUV 4WD FE		Center Bearing Support Kit	538686S
2.0 (100 kw)	2006.01-2010.05		Front;Rear	SUV 4WD D4EA		Center Bearing Support	539906
	2006.01-2010.05		Centre	SUV FWD D4EA		Center Bearing Support	538616
	2006.01-2010.05		Centre	SUV 4WD D4EA	Inner diameter:28mm	Center Bearing Support	538616
	2006.01-2010.05		Centre	SUV 4WD D4EA	Inner diameter:30mm	Center Bearing Support	538624
	2006.01-2010.05		Centre	SUV FWD D4EA		Center Bearing Support Kit	538686S
	2006.01-2010.05		Centre	SUV 4WD D4EA		Center Bearing Support Kit	538686S
	2006.01-2010.05		Rear	SUV 4WD D4EA		Flexible Coupling	519580
	2010.06-2015.12	AT/MT	Rear	SUV 4WD D4HA		Propshaft	PS900272
	2010.06-2015.12		Front;Rear	SUV 4WD D4HA		Center Bearing Support	539906

	YEAR	TRANSM.	FITTING POSITION	BODY STYLE & DRIVE TYPE & ENGINE	REMARKS	PRODUCT	GSP Ref.
KIA							
Sportage							
2.0 (100 kw)	2010.06-2015.12		Centre	SUV 4WD D4HA		Center Bearing Support	538624
	2010.06-2015.12		Centre	SUV 4WD D4HA		Center Bearing Support Kit	538685S
	2010.06-2015.12		Front;Rear	SUV 4WD D4HA		Flexible Coupling	533419
	2015.09-2022.09		Front;Rear	SUV 4WD D4HA		Flexible Coupling	533419
2.0 (103 kw)	2006.02-2010.05		Front;Rear	SUV 4WD D4EA		Center Bearing Support	539906
	2006.02-2010.05		Centre	SUV 4WD D4EA	Inner diameter:28mm	Center Bearing Support	538616
	2006.02-2010.05		Centre	SUV FWD D4EA		Center Bearing Support	538616
	2006.02-2010.05		Centre	SUV 4WD D4EA	Inner diameter:30mm	Center Bearing Support	538624
	2006.02-2010.05		Centre	SUV 4WD D4EA	Date from:2013.04,Date to:2014.01	Center Bearing Support Kit	538685S
	2006.02-2010.05		Centre	SUV 4WD D4EA	Date from:2006.09,Date to:2010.05	Center Bearing Support Kit	538686S
	2006.02-2010.05		Rear	SUV 4WD D4EA		Flexible Coupling	519580
2.0 (104 kw)	2004.07-		Centre	SUV FWD G4GC		Center Bearing Support	538616
	2004.07-		Centre	SUV FWD G4GC		Center Bearing Support Kit	538686S
	2004.07-2010.05		Front;Rear	SUV 4WD G4GC		Center Bearing Support	539906
	2004.07-2010.05		Centre	SUV 4WD G4GC	Inner diameter:28mm	Center Bearing Support	538616
	2004.07-2010.05		Centre	SUV 4WD G4GC	Inner diameter:30mm	Center Bearing Support	538624
	2004.07-2010.05		Centre	SUV 4WD G4GC		Center Bearing Support Kit	538685S
	2004.07-2010.05		Centre	SUV 4WD G4GC		Center Bearing Support Kit	538686S
	2004.07-2010.05		Rear	SUV 4WD G4GC		Flexible Coupling	519580
2.0 (110 kw)	2008.09-2010.05		Front;Rear	SUV 4WD D4EA		Center Bearing Support	539906
	2008.09-2010.05		Centre	SUV 4WD D4EA		Center Bearing Support	538616
	2008.09-2010.05		Centre	SUV 4WD D4EA		Center Bearing Support Kit	538686S
	2008.09-2010.05		Rear	SUV 4WD D4EA		Flexible Coupling	519580
	2010.06-2013.12	AT/MT	Rear	SUV 4WD G4KD	Date from:2011.01	Propshaft	PS900272
	2014.01-2015.12		Front;Rear	SUV 4WD G4NA		Flexible Coupling	533419
	2015.12-2022.09	AT	Rear	SUV 4WD G4NA	Date to:2018.06	Propshaft	PS901718
	2015.12-2022.09		Front;Rear	SUV 4WD G4NA		Flexible Coupling	533419
2.0 (113 kw)	2014.11-2015.12		Front;Rear	SUV 4WD G4NA		Flexible Coupling	533419
2.0 (114 kw)	2015.12-2022.09	AT	Rear	SUV 4WD G4NA	Date to:2018.06	Propshaft	PS901718
	2015.12-2022.09		Front;Rear	SUV 4WD G4NA		Flexible Coupling	533419
2.0 (120 kw)	2010.06-2015.12	AT/MT	Rear	SUV 4WD G4KD	Date from:2011.01	Propshaft	PS900272
	2010.06-2015.12		Front;Rear	SUV 4WD G4KD		Center Bearing Support	539906
	2010.06-2015.12		Centre	SUV 4WD G4KD		Center Bearing Support	538624
	2010.06-2015.12		Centre	SUV 4WD G4KD		Center Bearing Support Kit	538685S
	2010.06-2015.12		Front;Rear	SUV 4WD G4KD		Flexible Coupling	533419
2.0 (122 kw)	2010.07-2015.12	AT/MT	Rear	SUV 4WD G4KD	Date from:2011.01	Propshaft	PS900272
	2010.07-2015.12		Centre	SUV 4WD G4KD		Center Bearing Support	538624
	2010.07-2015.12		Centre	SUV 4WD G4KD		Center Bearing Support Kit	538685S
	2010.07-2015.12		Front;Rear	SUV 4WD G4KD		Flexible Coupling	533419
	2014.02-2015.12		Front;Rear	SUV 4WD G4NC		Flexible Coupling	533419
2.0 (129 kw)	2015.09-2022.09		Front;Rear	SUV 4WD D4HA		Flexible Coupling	533419
2.0 (130 kw)	2012.08-2015.12		Centre	SUV 4WD D4HA		Center Bearing Support	538624
	2012.08-2015.12		Front;Rear	SUV 4WD D4HA		Flexible Coupling	533419
2.0 (131 kw)	2012.01-2016.12		Front;Rear	SUV 4WD G4KD		Flexible Coupling	533419
2.0 (135 kw)	2010.08-2015.12	AT/MT	Rear	SUV 4WD D4HA	Date to:2016.12	Propshaft	PS900272
	2010.08-2015.12		Centre	SUV 4WD D4HA		Center Bearing Support	538624
	2010.08-2015.12		Centre	SUV 4WD D4HA		Center Bearing Support Kit	538685S
	2010.08-2015.12		Front;Rear	SUV 4WD D4HA		Flexible Coupling	533419
2.0 (136 kw)	2015.09-2022.09		Front;Rear	SUV 4WD D4HA		Flexible Coupling	533419
2.4 (130 kw)	2010.08-2015.12	AT/MT	Rear	SUV 4WD G4KE	Date from:2011.01	Propshaft	PS900272
	2010.08-2015.12		Front;Rear	SUV 4WD G4KE		Flexible Coupling	533419
2.4 (135 kw)	2015.10-2022.09		Front;Rear	SUV 4WD G4KJ		Flexible Coupling	533419
2.7 (129 kw)	2004.07-2011.05		Centre	SUV 4WD G6BA		Center Bearing Support	538616
	2004.07-2011.05		Centre	SUV 4WD G6BA		Center Bearing Support Kit	538686S
Sportage R							
2.0 (135 kw)	2010.08-2015.12	AT/MT	Rear	SUV 4WD D4HA	Date to:2016.12	Propshaft	PS900272
	2010.08-2015.12		Centre	SUV 4WD D4HA		Center Bearing Support	538624
	2010.08-2015.12		Centre	SUV 4WD D4HA		Center Bearing Support Kit	538685S
	2010.08-2015.12		Front;Rear	SUV 4WD D4HA		Flexible Coupling	533419
Sportage Van							
2.0 (110 kw)	2008.09-2010.05		Centre	SUV Van 4WD D4EA		Center Bearing Support Kit	538686S
	2008.09-2010.05		Rear	SUV Van 4WD D4EA	6MT	Flexible Coupling	519580

	YEAR	TRANSM.	FITTING POSITION	BODY STYLE & DRIVE TYPE & ENGINE	REMARKS	PRODUCT	GSP Ref.
KIA (DYK)							
Sportage							
2.0 (104 kw)	2007.10-2017.12		Centre	SUV 4WD G4GC		Center Bearing Support	538616
2.7 (127 kw)	2007.11-2011.12		Centre	SUV 4WD G6BA		Center Bearing Support	538616
LANCIA							
Thema							
3.0 (140 kw)	2011.09-2014.10		Centre	Saloon RWD EXF		Center Bearing Support	538612
3.0 (176 kw)	2011.09-2014.10		Centre	Saloon RWD EXF		Center Bearing Support	538612
3.6 (210 kw)	2011.09-2014.10		Centre	Saloon RWD ERB		Center Bearing Support	538612
	2011.09-2014.10		Centre	Saloon 4WD ERB		Center Bearing Support	538612
Y10 (Ypsilon)							
1.1 (37 kw)	1989.07-1995.09		Front;Rear	Hatchback FWD 156C046		Center Bearing Support	539039
	1992.09-1995.12		Front;Rear	Hatchback 4WD 156C046		Center Bearing Support	539039
1.1 (40 kw)	1995.01-1995.12		Front;Rear	Hatchback 4WD 176B2000		Center Bearing Support	539039
	1995.01-1995.12		Front;Rear	Hatchback FWD 176B2000		Center Bearing Support	539039
1.3 (53 kw)	1989.02-1995.12		Front;Rear	Hatchback FWD 146A5046/156B000		Center Bearing Support	539039
LAND ROVER							
Defender							
4.0 (140 kw)	1996.09-1997.12	5MT	Rear	Closed Off-Road Vehicle 4WD	For Model year:1997	Propshaft	PS900315
Defender 110							
2.0 (147 kw)	2019.09-	AT	Front	Terrain cab wagon closed 4WD 204DTA(AJ20D4)	Date from:2020.01	Joint,propshaft	601910
	2020.02-	AT	Front	Terrain cab wagon closed Van 4WD 204DTA(AJ20D4)		Joint,propshaft	601910
2.0 (177 kw)	2019.09-	AT	Front	Terrain cab wagon closed 4WD 204DTA(AJ20D4)	Date from:2020.01	Joint,propshaft	601910
	2020.02-	AT	Front	Terrain cab wagon closed Van 4WD 204DTA(AJ20D4)		Joint,propshaft	601910
2.0 (221 kw)	2019.09-	AT	Front	Terrain cab wagon closed 4WD PT204(AJ20P4)	Date from:2020.01	Joint,propshaft	601910
	2020.02-	AT	Front	Terrain cab wagon closed Van 4WD PT204(AJ20P4)		Propshaft	PS900530
	2020.02-	AT	Front	Terrain cab wagon closed Van 4WD PT204(AJ20P4)		Joint,propshaft	601910
2.5 (83 kw)	1990.09-1998.11	MT	Front	Terrain cab open 4WD 11L/16L	Chassis no. to:LA939975	Propshaft	PS900313
	1990.09-1998.11	5MT	Rear	Terrain cab open 4WD 11L/16L		Propshaft	PS900314
	1990.09-1998.12	MT	Front	Terrain cab wagon closed 4WD 11L/16L/23L	Chassis no. to:LA939975	Propshaft	PS900313
	1990.09-1998.12	MT	Rear	Terrain cab wagon closed 4WD 11L/16L/23L	for OE No.:FRC8392	Propshaft	PS900314
	1990.09-1998.12	MT	Rear	Terrain cab wagon closed 4WD 11L/16L/23L	Engine Code: 11 L,for 110 inch wheelbase;for OE No.:FTC3905	Propshaft	PS901587
2.5 (90 kw)	1998.06-2012.12	MT	Front	Terrain cab wagon closed 4WD 10P/14P/15P	Chassis no. to:LA939975	Propshaft	PS900313
	1998.06-2012.12	MT	Front	Terrain cab wagon closed 4WD 10P/14P/15P	Chassis no. from:MA939976	Propshaft	PS900326
	1998.06-2012.12	MT	Rear	Terrain cab wagon closed 4WD 10P/14P/15P	for 90 inch wheelbase	Propshaft	PS900315
	1998.06-2012.12	MT	Rear	Terrain cab wagon closed 4WD 10P/14P/15P	Chassis no. from:KA925787,Chassis no. to:1A602284,for 110 inch wheelbase	Propshaft	PS900316
	1998.06-2012.12	MT	Rear	Terrain cab wagon closed 4WD 10P/14P/15P	Chassis no. from:LA937640,Chassis no. to:2A638133,for 110 inch wheelbase	Propshaft	PS901587
	1998.06-2012.12	MT	Rear	Terrain cab wagon closed 4WD 10P/14P/15P	Chassis no.from:2A638134/LA942618,wheelbase:110 Inch	Propshaft	PS901644
Defender 110 Pickup							
2.5 (90 kw)	1998.06-2006.09	MT	Front	Terrain cab open 4WD 10P/14P	Chassis no. to:LA939975	Propshaft	PS900313
	1998.06-2006.09	MT	Rear	Terrain cab open 4WD 10P/14P	Chassis no. from:KA925787,Chassis no. to:1A602284,for 110 inch wheelbase	Propshaft	PS900316
	1998.06-2006.09	MT	Rear	Terrain cab open 4WD 10P/14P	Chassis no. from:LA937640,Chassis no. to:2A638133,for 110 inch wheelbase	Propshaft	PS901587
	1998.06-2006.09	MT	Rear	Terrain cab open 4WD 10P/14P	Chassis no.from:2A638134/LA942618,wheelbase:110 Inch	Propshaft	PS901644
Defender 130							
2.5 (83 kw)	1990.09-1998.11	MT	Front	Terrain cab open 4WD 11L/16L	Chassis no. to:LA939975	Propshaft	PS900313
	1990.09-1998.11	5MT	Rear	Terrain cab open 4WD 11L/16L		Propshaft	PS900314
	1995.01-1998.03	MT	Front	Terrain cab wagon closed 4WD 16L	Chassis no. to:LA939975	Propshaft	PS900313
	1995.01-1998.03	MT	Rear	Terrain cab wagon closed 4WD 16L	for OE No.:FRC8392	Propshaft	PS900314
	1995.01-1998.03	MT	Rear	Terrain cab wagon closed 4WD 16L	Engine Code: 11 L,for 110 inch wheelbase;for OE No.:FTC3905	Propshaft	PS901587
2.5 (90 kw)	1998.06-2007.07	MT	Front	Terrain cab wagon closed 4WD 10P/14P/15P	Chassis no. to:LA939975	Propshaft	PS900313
	1998.06-2007.07	MT	Front	Terrain cab wagon closed 4WD 10P/14P/15P	Chassis no. from:MA939976	Propshaft	PS900326
	1998.06-2007.07	MT	Rear	Terrain cab wagon closed 4WD 10P/14P/15P	for 90 inch wheelbase	Propshaft	PS900315
	1998.06-2007.07	MT	Rear	Terrain cab wagon closed 4WD 10P/14P/15P	Chassis no. from:KA925787,Chassis no. to:1A602284,for 110 inch wheelbase	Propshaft	PS900316
	1998.06-2007.07	MT	Rear	Terrain cab wagon closed 4WD 10P/14P/15P	Chassis no. from:LA937640,Chassis no. to:2A638133,for 110 inch wheelbase	Propshaft	PS901587
Defender 130 Pickup							
2.5 (90 kw)	1998.04-2006.09	MT	Front	Terrain cab open 4WD 10P/14P	Chassis no. to:LA939975	Propshaft	PS900313
	1998.04-2006.09		Rear	Terrain cab open 4WD 10P/14P	Chassis no. from:KA925787,Chassis no. to:1A602284,for 110 inch wheelbase	Propshaft	PS900316
	1998.04-2006.09	MT	Rear	Terrain cab open 4WD 10P/14P	Chassis no. from:LA937640,Chassis no. to:2A638133,for 110 inch wheelbase	Propshaft	PS901587
Defender 90							
2.0 (147 kw)	2019.09-	AT	Front	Terrain cab wagon closed 4WD 204DTA(AJ20D4)	Date from:2020.01	Joint,propshaft	601910
	2020.02-	AT	Front	Terrain cab wagon closed Van 4WD 204DTA(AJ20D4)		Joint,propshaft	601910
2.0 (177 kw)	2019.09-	AT	Front	Terrain cab wagon closed 4WD 204DTA(AJ20D4)	Date from:2020.01	Joint,propshaft	601910
	2020.02-	AT	Front	Terrain cab wagon closed Van 4WD 204DTA(AJ20D4)		Joint,propshaft	601910
2.0 (221 kw)	2019.09-	AT	Front	Terrain cab wagon closed 4WD PT204(AJ20P4)	Date from:2020.01	Joint,propshaft	601910
	2020.02-	AT	Front	Terrain cab wagon closed Van 4WD PT204(AJ20P4)		Propshaft	PS900530
	2020.02-	AT	Front	Terrain cab wagon closed Van 4WD PT204(AJ20P4)		Joint,propshaft	601910

	YEAR	TRANSM.	FITTING POSITION	BODY STYLE & DRIVE TYPE & ENGINE	REMARKS	PRODUCT	GSP Ref.
LAND ROVER							
Defender 90							
2.5 (83 kw)	1990.08-1998.11	MT	Front	Terrain cab open 4WD 16L/23L	Chassis no. to:LA939975	Propshaft	PS900313
	1990.08-1998.11	5MT	Rear	Terrain cab open 4WD 16L/23L		Propshaft	PS900314
	1990.09-1998.12	MT	Front	Terrain cab wagon closed 4WD 11L/16L/23L	Chassis no. to:LA939975	Propshaft	PS900313
	1990.09-1998.12	MT	Rear	Terrain cab wagon closed 4WD 11L/16L/23L	for OE No.:FRC8392	Propshaft	PS900314
	1990.09-1998.12	MT	Rear	Terrain cab wagon closed 4WD 11L/16L/23L	Engine Code: 11 L,for 110 inch wheelbase;for OE No.:FTC3905	Propshaft	PS901587
2.5 (90 kw)	1998.06-2007.07	MT	Front	Terrain cab wagon closed 4WD 10P/14P/15P	Chassis no. to:LA939975	Propshaft	PS900313
	1998.06-2007.07	MT	Front	Terrain cab wagon closed 4WD 10P/14P/15P	Chassis no. from:MA939976	Propshaft	PS900326
	1998.06-2007.07	MT	Rear	Terrain cab wagon closed 4WD 10P/14P/15P	for 90 inch wheelbase	Propshaft	PS900315
	1998.06-2007.07	MT	Rear	Terrain cab wagon closed 4WD 10P/14P/15P	Chassis no. from:KA925787,Chassis no. to:1A602284,for 110 inch wheelbase	Propshaft	PS900316
	1998.06-2007.07	MT	Rear	Terrain cab wagon closed 4WD 10P/14P/15P	Chassis no. from:LA937640,Chassis no. to:2A638133,for 110 inch wheelbase	Propshaft	PS901587
4.0 (134 kw)	1994.01-2000.09	5MT	Rear	Terrain cab wagon closed 4WD 35L/37L	Model year from:1994,Model year to:1995	Propshaft	PS900315
Defender 90 Pickup							
2.5 (90 kw)	1998.06-2007.07	MT	Front	Terrain cab open 4WD 10P/14P/15P	Chassis no. to:LA939975	Propshaft	PS900313
	1998.06-2007.07	MT	Rear	Terrain cab open 4WD 10P/14P/15P	Chassis no. from:KA925787,Chassis no. to:1A602284,for 110 inch wheelbase	Propshaft	PS900316
	1998.06-2007.07	MT	Rear	Terrain cab open 4WD 10P/14P/15P	Chassis no. from:LA937640,Chassis no. to:2A638133,for 110 inch wheelbase	Propshaft	PS901587
Discovery							
2.0 (132 kw)	2016.09-2018.12	AT	Front	SUV 4WD 204DTD(AJ20D4)	Date from:2017.01	Joint,propshaft	601910
2.0 (176 kw)	2015.03-	AT	Rear	SUV 4WD 204PT		Propshaft	PS901648
2.0 (177 kw)	2016.09-	AT	Front	SUV 4WD 204DTA(AJ20D4)	Date from:2017.01	Joint,propshaft	601910
2.0 (221 kw)	2017.09-	AT	Rear	SUV 4WD PT204(AJ20P4)		Propshaft	PS901645
	2017.09-	AT	Rear	SUV Van 4WD PT204(AJ20P4)		Propshaft	PS901645
	2017.09-	AT	Front	SUV 4WD PT204(AJ20P4)	Date from:2018.01	Joint,propshaft	601910
2.7 (140 kw)	2004.07-2009.08	AT/MT	Front	Terrain cab wagon closed 4WD 276DT(TDV6)		Joint,propshaft	601910
	2004.07-2009.08	AT/MT	Rear	Terrain cab wagon closed 4WD 276DT(TDV6)		Joint,propshaft	699217
	2004.07-2009.08		Centre	Terrain cab wagon closed 4WD 276DT(TDV6)		Center Bearing Support	538631
	2007.01-2009.07		Centre	Van 4WD 276DT(TDV6)		Center Bearing Support	538631
	2009.09-2018.12	AT/MT	Front	Terrain cab wagon closed 4WD 276DT(TDV6)		Joint,propshaft	601910
	2009.09-2018.12	AT/MT	Rear	Terrain cab wagon closed 4WD 276DT(TDV6)		Joint,propshaft	699217
	2009.09-2018.12		Centre	Terrain cab wagon closed 4WD 276DT(TDV6)		Center Bearing Support	538631
3.0 (155 kw)	2009.09-2018.12	AT/MT	Front	Terrain cab wagon closed 4WD 306DT(TDV6)		Joint,propshaft	601910
	2009.09-2018.12		Centre	Terrain cab wagon closed 4WD 306DT(TDV6)		Center Bearing Support	538631
	2011.01-2017.12		Centre	Van 4WD 306DT(TDV6)		Center Bearing Support	538631
	2016.09-	AT	Front	SUV 4WD 306DT(TDV6)	Model year from:2017,Model year to:2020	Propshaft	PS900530
	2016.09-	AT	Front	SUV 4WD 306DT(TDV6)	Date from:2017.01	Joint,propshaft	601910
3.0 (180 kw)	2009.09-2018.12	AT/MT	Front	Terrain cab wagon closed 4WD 306DT(TDV6)		Joint,propshaft	601910
	2009.09-2018.12	AT/MT	Rear	Terrain cab wagon closed 4WD 306DT(TDV6)		Joint,propshaft	699217
	2009.09-2018.12		Centre	Terrain cab wagon closed 4WD 306DT(TDV6)		Center Bearing Support	538631
	2011.01-2011.12		Centre	Van 4WD 306DT(TDV6)		Center Bearing Support	538631
3.0 (183 kw)	2013.01-2018.12	AT/MT	Front	Terrain cab wagon closed 4WD 306DT(TDV6)		Joint,propshaft	601910
	2013.01-2018.12	AT/MT	Rear	Terrain cab wagon closed 4WD 306DT(TDV6)		Joint,propshaft	699217
	2013.01-2018.12		Centre	Terrain cab wagon closed 4WD 306DT(TDV6)		Center Bearing Support	538631
	2016.09-	AT	Front	SUV 4WD 306DT(TDV6)	Model year from:2017,Model year to:2020	Propshaft	PS900530
	2016.09-	AT	Front	SUV 4WD 306DT(TDV6)	Date from:2017.01	Joint,propshaft	601910
3.0 (188 kw)	2009.09-2018.12	AT/MT	Front	Terrain cab wagon closed 4WD 306DT(TDV6)		Joint,propshaft	601910
	2009.09-2018.12	AT/MT	Rear	Terrain cab wagon closed 4WD 306DT(TDV6)		Joint,propshaft	699217
	2009.09-2018.12		Centre	Terrain cab wagon closed 4WD 306DT(TDV6)		Center Bearing Support	538631
	2011.07-2017.12		Centre	Van 4WD 306DT(TDV6)		Center Bearing Support	538631
3.0 (190 kw)	2016.09-	AT	Front	SUV 4WD 306DT(TDV6)	Model year from:2017,Model year to:2020	Propshaft	PS900530
	2016.09-	AT	Front	SUV 4WD 306DT(TDV6)	Date from:2017.01	Joint,propshaft	601910
3.0 (200 kw)	2009.09-2018.12	AT/MT	Front	Terrain cab wagon closed 4WD 306DT(TDV6)		Joint,propshaft	601910
	2009.09-2018.12	AT/MT	Rear	Terrain cab wagon closed 4WD 306DT(TDV6)		Joint,propshaft	699217
	2009.09-2018.12		Centre	Terrain cab wagon closed 4WD 306DT(TDV6)		Center Bearing Support	538631
3.0 (225 kw)	2018.09-	AT	Front	SUV 4WD 306DT(TDV6)	Date from:2019.01	Joint,propshaft	601910
3.0 (250 kw)	2013.08-2018.12	AT	Front	Terrain cab wagon closed 4WD 306PS(AJ126)	Model year from:2014,Model year to:2016	Propshaft	PS900324
	2013.08-2018.12	AT	Rear	Terrain cab wagon closed 4WD 306PS(AJ126)	Model year from:2014,Model year to:2016,for OE No.:LR037027	Propshaft	PS900325
	2013.08-2018.12	AT	Rear	Terrain cab wagon closed 4WD 306PS(AJ126)	Model year from:2014,Model year to:2016,for OE No.:LR050890	Propshaft	PS901649
	2013.08-2018.12		Centre	Terrain cab wagon closed 4WD 306PS(AJ126)		Center Bearing Support	538631
	2016.09-	AT	Front	SUV 4WD 306PS(AJ126)	Model year from:2017,Model year to:2020	Propshaft	PS900530
	2016.09-	AT	Front	SUV 4WD 306PS(AJ126)	Date from:2017.01	Joint,propshaft	601910
3.0 (254 kw)	2012.09-2018.12	AT	Rear	Closed Off-Road Vehicle 4WD 306PS(AJ126)	Model year from:2014,Model year to:2016	Propshaft	PS901649
4.0 (136 kw)	1998.11-2004.06	AT	Front	Terrain cab wagon closed 4WD 56D	Model year from:1998,Model year to:2002,Chassis no. from:1A715823,Chassis no. to:1A715822	Propshaft	PS900321
	1998.11-2004.06	AT	Rear	Terrain cab wagon closed 4WD 56D	Model year from:1998,Model year to:2002,Chassis no. from:1A292873,Chassis no. to:1A292872	Propshaft	PS900320
4.0 (156 kw)	2004.10-2009.09	AT	Front	Closed Off-Road Vehicle 4WD 406PN	Model year from:2005,Model year to:2007	Propshaft	PS900324
	2004.10-2009.09	AT	Rear	Closed Off-Road Vehicle 4WD 406PN	Model year from:2005,Model year to:2007	Propshaft	PS900325

	YEAR	TRANSM.	FITTING POSITION	BODY STYLE & DRIVE TYPE & ENGINE	REMARKS	PRODUCT	GSP Ref.
LAND ROVER							
Discovery							
4.0 (160 kw)	2004.10-2009.09	AT	Front	Terrain cab wagon closed 4WD 406PN(COLOGNEV6)	Model year from:2005,Model year to:2007	Propshaft	PS900324
	2004.10-2009.09	AT	Rear	Terrain cab wagon closed 4WD 406PN(COLOGNEV6)	Model year from:2005,Model year to:2007	Propshaft	PS900325
	2004.10-2009.09		Centre	Terrain cab wagon closed 4WD 406PN(COLOGNEV6)		Center Bearing Support	538631
	2010.01-2018.12	AT/MT	Front	Terrain cab wagon closed 4WD 406PN(COLOGNEV6)		Joint,propshaft	601910
	2010.01-2018.12	AT/MT	Rear	Terrain cab wagon closed 4WD 406PN(COLOGNEV6)		Joint,propshaft	699217
	2010.01-2018.12		Centre	Terrain cab wagon closed 4WD 406PN(COLOGNEV6)		Center Bearing Support	538631
4.0 (161 kw)	2005.02-2009.09	AT/MT	Front	Terrain cab wagon closed 4WD 406PN(COLOGNEV6)	Date from:2009.01	Joint,propshaft	601910
	2005.02-2009.09	AT/MT	Rear	Terrain cab wagon closed 4WD 406PN(COLOGNEV6)	Date from:2009.01	Joint,propshaft	699217
	2005.02-2009.09		Centre	Terrain cab wagon closed 4WD 406PN(COLOGNEV6)		Center Bearing Support	538631
4.4 (220 kw)	2004.07-2009.08	AT	Front	Terrain cab wagon closed 4WD 448PN(AJV8)	Model year from:2005	Propshaft	PS900324
	2004.07-2009.08	AT	Rear	Terrain cab wagon closed 4WD 448PN(AJV8)	Model year from:2005	Propshaft	PS900325
	2004.07-2009.08	AT/MT	Front	Terrain cab wagon closed 4WD 448PN(AJV8)		Joint,propshaft	601910
	2004.07-2009.08	AT/MT	Rear	Terrain cab wagon closed 4WD 448PN(AJV8)		Joint,propshaft	699217
	2004.07-2009.08		Centre	Terrain cab wagon closed 4WD 448PN(AJV8)		Center Bearing Support	538631
4.4 (224 kw)	2004.09-2009.09	AT	Front	Closed Off-Road Vehicle 4WD 448PN	Model year from:2005	Propshaft	PS900324
	2004.09-2009.09	AT	Rear	Closed Off-Road Vehicle 4WD 448PN	Model year from:2005	Propshaft	PS900325
4.6 (162 kw)	2002.09-2004.06	AT	Front	Closed Off-Road Vehicle 4WD 60 D	Model year from:2003,Model year to:2004	Propshaft	PS900321
	2002.09-2004.06	AT	Rear	Closed Off-Road Vehicle 4WD 60 D	Model year from:2003,Model year to:2004	Propshaft	PS900319
5.0 (276 kw)	2009.09-2018.12	AT	Front	Terrain cab wagon closed 4WD 508PN(AJ133)	Model year from:2010,Model year to:2013	Propshaft	PS900324
	2009.09-2018.12	AT	Rear	Terrain cab wagon closed 4WD 508PN(AJ133)	Model year from:2010,Model year to:2013	Propshaft	PS900325
	2009.09-2018.12	AT/MT	Front	Terrain cab wagon closed 4WD 508PN(AJ133)		Joint,propshaft	601910
	2009.09-2018.12	AT/MT	Rear	Terrain cab wagon closed 4WD 508PN(AJ133)		Joint,propshaft	699217
	2009.09-2018.12		Centre	Terrain cab wagon closed 4WD 508PN(AJ133)		Center Bearing Support	538631
Discovery Sport							
2.0 (110 kw)	2015.08-	AT	Rear	SUV FWD 204DTD(AJ20D4)		Propshaft	PS901647
2.0 (132 kw)	2015.06-	AT	Rear	SUV 4WD 204DTD(AJ20D4)		Propshaft	PS901647
Freelander							
1.8 (86 kw)	1998.04-2006.10	AT/MT	Front	Terrain cab wagon closed 4WD 18K4F		Joint,propshaft	601384
	1998.04-2006.10		Centre	Terrain cab wagon closed 4WD 18K4F		Center Bearing Support Kit	538697S
	2000.10-2006.10		Centre	Terrain cab open 4WD 18K4F		Center Bearing Support Kit	538697S
1.8 (88 kw)	1998.02-2000.11	AT/MT	Front	Terrain cab wagon closed 4WD 18K4F		Joint,propshaft	601384
	1998.02-2000.11		Centre	Terrain cab wagon closed 4WD 18K4F		Center Bearing Support Kit	538697S
	1998.02-2006.10	AT/MT	Front	Terrain cab open 4WD 18K4F		Joint,propshaft	601384
	1998.02-2006.10		Centre	Terrain cab open 4WD 18K4F		Center Bearing Support Kit	538697S
2.0 (72 kw)	1998.02-2000.11	AT/MT	Front	Terrain cab open 4WD 20TCIE		Joint,propshaft	601384
	1998.02-2000.11	AT/MT	Front	Terrain cab wagon closed 4WD 20TCIE		Joint,propshaft	601384
	1998.02-2000.11		Centre	Terrain cab wagon closed 4WD 20TCIE		Center Bearing Support Kit	538697S
2.0 (80 kw)	2001.11-2006.10	AT/MT	Front	Terrain cab wagon closed 4WD M47		Joint,propshaft	601384
2.0 (82 kw)	2000.04-2006.10	AT/MT	Front	Terrain cab wagon closed 4WD M47		Joint,propshaft	601384
	2000.04-2006.10		Centre	Terrain cab wagon closed 4WD M47		Center Bearing Support Kit	538697S
2.0 (177 kw)	2011.10-2014.10	6AT	Rear	Terrain cab wagon closed 4WD 204PT(GTDI)	Model year from:2013;Chassis no. from:AH180238	Propshaft	PS900332
	2011.10-2014.10	6AT	-	Terrain cab wagon closed 4WD 204PT(GTDI)	Model year from:2013;Chassis no. from:AH180238	Joint,propshaft	602051
	2011.10-2014.10		Front;Rear	Terrain cab wagon closed 4WD 204PT(GTDI)		Center Bearing Support	539906
2.2 (110 kw)	2006.10-2014.10	AT	Front	Terrain cab wagon closed 4WD 224DT(DW12BTED4)		Joint,propshaft	835068
	2006.10-2014.10		Front;Rear	Terrain cab wagon closed 4WD 224DT(DW12BTED4)		Center Bearing Support	539906
	2010.08-2014.10	AT	Front	Terrain cab wagon closed FWD 224DT(DW12BTED4)		Joint,propshaft	835068
	2010.08-2014.10		Front;Rear	Terrain cab wagon closed FWD 224DT(DW12BTED4)		Center Bearing Support	539906
2.2 (112 kw)	2007.01-2014.10	AT	Front	Terrain cab wagon closed 4WD 224DT(DW12BTED4)		Joint,propshaft	835068
	2007.01-2014.10		Front;Rear	Terrain cab wagon closed 4WD 224DT(DW12BTED4)		Center Bearing Support	539906
2.2 (115 kw)	2006.10-2014.10	AT	Front	Terrain cab wagon closed 4WD 224DT(DW12BTED4)		Joint,propshaft	835068
2.2 (118 kw)	2006.10-2014.10	AT	Front	Terrain cab wagon closed 4WD 224DT(DW12BTED4)		Joint,propshaft	835068
	2006.10-2014.10		Front;Rear	Terrain cab wagon closed 4WD 224DT(DW12BTED4)		Center Bearing Support	539906
2.2 (140 kw)	2010.08-2014.10	AT	Front	Terrain cab wagon closed 4WD 224DT(DW12BTED4)		Joint,propshaft	835068
	2010.08-2014.10		Front;Rear	Terrain cab wagon closed 4WD 224DT(DW12BTED4)		Center Bearing Support	539906
2.5 (130 kw)	2000.11-2006.10	5AT	Front	Terrain cab wagon closed 4WD 25KV6	Model year from:2002,Model year to:2005	Propshaft	PS900330
	2000.11-2006.10	5AT	Rear	Terrain cab wagon closed 4WD 25KV6	Model year from:2002,Model year to:2005	Propshaft	PS900331
	2000.11-2006.10	AT/MT	Front	Terrain cab wagon closed 4WD 25KV6		Joint,propshaft	601384
	2000.11-2006.10		Front;Rear	Terrain cab wagon closed 4WD 25KV6		Center Bearing Support	539906
	2000.11-2006.10		Centre	Terrain cab wagon closed 4WD 25KV6		Center Bearing Support Kit	538697S
3.2 (171 kw)	2006.10-2014.10	6AT	Rear	Terrain cab wagon closed 4WD B6324S(32PDPR)	Model year from:2009,Model year to:2010;Chassis no. to:AH180237	Propshaft	PS900332
	2006.10-2014.10	6AT	-	Terrain cab wagon closed 4WD B6324S(32PDPR)	Model year from:2009,Model year to:2010;Chassis no. to:AH180237	Joint,propshaft	602051
	2006.10-2014.10		Front;Rear	Terrain cab wagon closed 4WD B6324S(32PDPR)		Center Bearing Support	539906

	YEAR	TRANSM.	FITTING POSITION	BODY STYLE & DRIVE TYPE & ENGINE	REMARKS	PRODUCT	GSP Ref.
LAND ROVER **Range Rover**							
2.0 (297 kw)	2017.10-2021.09	8AT	Rear	SUV 4WD PT204(AJ20P4)	Model year to:2022,Chassis no. from:JA000001,Standard Wheelbase	Propshaft	PS901652
3.0 (130 kw)	2002.02-2009.08	AT	Front	Terrain cab wagon closed 4WD 306D1(M57D30)		Propshaft	PS900338
	2002.02-2009.08	AT	Front	Terrain cab wagon closed 4WD 306D1(M57D30)	Chassis no. to:5A999999	Joint,propshaft	602494
	2002.02-2009.08	AT	Rear	Terrain cab wagon closed 4WD 306D1(M57D30)	Chassis no. to:5A999999	Joint,propshaft	602495
	2002.02-2009.08		Centre	Terrain cab wagon closed 4WD 306D1(M57D30)		Center Bearing Support	538671
3.0 (155 kw)	2013.10-2021.09	AT	Front	SUV 4WD 306DT(TDV6)	Model year from:2016,Model year to:2021	Propshaft	PS900530
	2013.10-2021.09	8AT	Rear	SUV 4WD 306DT(TDV6)	Model year from:2016,Model year to:2020,With locking differential,Long Wheelbase	Propshaft	PS901951
	2013.10-2021.09	AT	Rear	SUV 4WD 306DT(TDV6)	Model year from:2016,Model year to:2017,Standard wheelbase	Propshaft	PS900536
	2013.10-2021.09	AT	Rear	SUV 4WD 306DT(TDV6)	Model year from:2017,Model year to:2021,,With locking differential,short wheelbase	Propshaft	PS901646
	2013.10-2021.09	AT	Front	SUV 4WD 306DT(TDV6)		Joint,propshaft	601910
3.0 (182 kw)	2014.12-2021.09	AT	Front	SUV 4WD 306DT(TDV6)	Model year from:2016,Model year to:2021	Propshaft	PS900530
	2014.12-2021.09	AT	Rear	SUV 4WD 306DT(TDV6)	Model year from:2016,Model year to:2017	Propshaft	PS900536
	2014.12-2021.09	AT	Rear	SUV 4WD 306DT(TDV6)	Model year from:2017,Model year to:2021	Propshaft	PS901646
3.0 (183 kw)	2012.08-2021.09	AT	Front	SUV 4WD 306DT(TDV6)	Model year from:2016,Model year to:2021	Propshaft	PS900530
	2012.08-2021.09	8AT	Rear	SUV 4WD 306DT(TDV6)	Model year from:2016,Model year to:2020,With locking differential,Long Wheelbase	Propshaft	PS901951
	2012.08-2021.09	AT	Rear	SUV 4WD 306DT(TDV6)	Model year from:2016,Model year to:2017,Standard wheelbase	Propshaft	PS900536
	2012.08-2021.09	AT	Rear	SUV 4WD 306DT(TDV6)	Model year from:2017,Model year to:2021,,With locking differential,short wheelbase	Propshaft	PS901646
	2012.08-2021.09	AT	Front	SUV 4WD 306DT(TDV6)		Joint,propshaft	601910
3.0 (190 kw)	2012.10-2021.09	AT	Front	SUV 4WD 306DT(TDV6)	Model year from:2016,Model year to:2021	Propshaft	PS900530
	2012.10-2021.09	8AT	Rear	SUV 4WD 306DT(TDV6)	Model year from:2016,Model year to:2020,With locking differential,Long Wheelbase	Propshaft	PS901951
	2012.10-2021.09	AT	Rear	SUV 4WD 306DT(TDV6)	Model year from:2016,Model year to:2017,Standard wheelbase	Propshaft	PS900536
	2012.10-2021.09	AT	Rear	SUV 4WD 306DT(TDV6)	Model year from:2017,Model year to:2021,,With locking differential,short wheelbase	Propshaft	PS901646
	2012.10-2021.09	AT	Front	SUV 4WD 306DT(TDV6)		Joint,propshaft	601910
3.0 (202 kw)	2018.10-2021.09	AT	Front	SUV 4WD 306DT(TDV6)	Model year to:2021	Propshaft	PS900530
	2018.10-2021.09	8AT	Rear	SUV 4WD 306DT(TDV6)	With locking differential,Long Wheelbase	Propshaft	PS901951
	2018.10-2021.09	AT	Rear	SUV 4WD 306DT(TDV6)	Model year to:2021,With locking differential,short wheelbase	Propshaft	PS901646
3.0 (215 kw)	2012.10-2021.09	AT	Front	SUV 4WD 306DT(TDV6)	Model year from:2016,Model year to:2021	Propshaft	PS900530
	2012.10-2021.09	8AT	Rear	SUV 4WD 306DT(TDV6)	Model year from:2016,Model year to:2020,With locking differential,Long Wheelbase	Propshaft	PS901951
	2012.10-2021.09	AT	Rear	SUV 4WD 306DT(TDV6)	Model year from:2016,Model year to:2017,Standard wheelbase	Propshaft	PS900536
	2012.10-2021.09	AT	Rear	SUV 4WD 306DT(TDV6)	Model year from:2017,Model year to:2021,,With locking differential,short wheelbase	Propshaft	PS901646
3.0 (250 kw)	2013.10-2021.09	AT	Front	SUV 4WD 306PS(AJ126)	Model year to:2019	Propshaft	PS900530
	2013.10-2021.09	8AT	Rear	SUV 4WD 306PS(AJ126)	Model year to:2017,With locking differential,Long Wheelbase	Propshaft	PS901951
	2013.10-2021.09	AT	Rear	SUV 4WD 306PS(AJ126)	Model year from:2014,Model year to:2019,Standard wheelbase	Propshaft	PS900536
	2013.10-2021.09	AT	Rear	SUV 4WD 306PS(AJ126)	Model year from:2017,Model year to:2019,With locking differential,short wheelbase	Propshaft	PS901646
	2013.10-2021.09	AT	Front	SUV 4WD 306DT(TDV6)		Joint,propshaft	601910
3.0 (260 kw)	2015.06-2021.09	AT	Front	SUV 4WD 306DT(TDV6)		Joint,propshaft	601910
3.0 (280 kw)	2015.06-2021.09	AT	Front	SUV 4WD 306PS(AJ126)	Model year to:2019	Propshaft	PS900530
	2015.06-2021.09	8AT	Rear	SUV 4WD 306PS(AJ126)	Model year to:2017,With locking differential,Long Wheelbase	Propshaft	PS901951
	2015.06-2021.09	AT	Rear	SUV 4WD 306PS(AJ126)	Model year from:2014,Model year to:2019,Standard wheelbase	Propshaft	PS900536
	2015.06-2021.09	AT	Rear	SUV 4WD 306PS(AJ126)	Model year from:2017,Model year to:2019,With locking differential,short wheelbase	Propshaft	PS901646
3.0 (294 kw)	2020.07-2021.09	AT	Front	SUV 4WD PT306(AJ20P6)	Model year to:2019	Propshaft	PS900530
	2020.07-2021.09	8AT	Rear	SUV 4WD PT306(AJ20P6)	Model year to:2022,Chassis no. from:JA000001,2-speed transfer case	Propshaft	PS901652
3.5 (107 kw)	1986.06-1989.09	MT	Rear	Terrain cab wagon closed 4WD 24D/25D	Model year to:1988	Propshaft	PS900327
3.6 (200 kw)	2006.10-2012.08		Front	Terrain cab wagon closed 4WD 368DT(LION)		Joint,propshaft	601910
	2006.10-2012.08	AT	Front	Terrain cab wagon closed 4WD 368DT(LION)	Chassis no. to:5A999999	Joint,propshaft	602494
	2006.10-2012.08	AT	Rear	Terrain cab wagon closed 4WD 368DT(LION)	Chassis no. to:5A999999	Joint,propshaft	602495
	2006.10-2012.08		Centre	Terrain cab wagon closed 4WD 368DT(LION)		Center Bearing Support	538671
3.9 (134 kw)	1988.11-1994.07	MT	Rear	Closed Off-Road Vehicle 4WD 35 D, 36 D		Propshaft	PS900327
4.0 (136 kw)	1989.10-1992.12	5MT	Rear	Terrain cab wagon closed 4WD 35D	Model year from:1993;Long wheelbase	Propshaft	PS900318
	1989.10-1992.12	MT	Rear	Terrain cab wagon closed 4WD 35D	Short wheelbase	Propshaft	PS900327
	1995.01-2002.08	AT	Front	Terrain cab wagon closed 4WD 58D	Model year to:2000	Propshaft	PS900328
	1995.01-2002.08	4AT	Rear	Terrain cab wagon closed 4WD 58D	Model year from:1999,Model year to:2000	Propshaft	PS900329
4.2 (149 kw)	1992.09-1995.12	5MT	Rear	Closed Off-Road Vehicle 4WD	Model year from:1993,Model year to:1994;Long wheelbase	Propshaft	PS900318
	1992.09-1995.12	MT	Rear	Closed Off-Road Vehicle 4WD	Model year from:1993,Model year to:1994;Short wheelbase	Propshaft	PS900327
4.2 (291 kw)	2005.05-2012.08	AT	Front	Terrain cab wagon closed 4WD 428PS(AJV8)	Model year from:2006,Model year to:2009	Propshaft	PS900333
	2005.05-2012.08	AT	Rear	Terrain cab wagon closed 4WD 428PS(AJV8)	Model year from:2006,Model year to:2009	Propshaft	PS900335
	2005.05-2012.08		Front	Terrain cab wagon closed 4WD 428PS(AJV8)		Joint,propshaft	601910
	2005.05-2012.08	AT	Front	Terrain cab wagon closed 4WD 428PS(AJV8)	Chassis no. to:5A999999	Joint,propshaft	602494
	2005.05-2012.08	AT	Rear	Terrain cab wagon closed 4WD 428PS(AJV8)	Chassis no. to:5A999999	Joint,propshaft	602495
	2005.05-2012.08		Centre	Terrain cab wagon closed 4WD 428PS(AJV8)		Center Bearing Support	538671
4.4 (210 kw)	2002.03-2005.12	AT	Front	Terrain cab wagon closed 4WD 44SDEX	Model year from:2003	Propshaft	PS900334
	2002.03-2005.12	AT	Rear	Terrain cab wagon closed 4WD 44SDEX	Model year from:2003	Propshaft	PS900339
	2002.03-2005.12	AT	Front	Terrain cab wagon closed 4WD 44SDEX	Chassis no. to:5A999999	Joint,propshaft	602494
	2002.03-2005.12	AT	Rear	Terrain cab wagon closed 4WD 44SDEX	Chassis no. to:5A999999	Joint,propshaft	602495

	YEAR	TRANSM.	FITTING POSITION	BODY STYLE & DRIVE TYPE & ENGINE	REMARKS	PRODUCT	GSP Ref.
LAND ROVER							
Range Rover							
4.4 (210 kw)	2002.03-2005.12		Centre	Terrain cab wagon closed 4WD 44SDEX		Center Bearing Support	538671
4.4 (220 kw)	2004.08-2012.08	AT	Front	Terrain cab wagon closed 4WD 448PN(AJV8)	Model year from:2006,Model year to:2009	Propshaft	PS900333
	2004.08-2012.08	AT	Front	Terrain cab wagon closed 4WD 448PN(AJV8)	Model year from:2003,Model year to:2005	Propshaft	PS900334
	2004.08-2012.08	AT	Rear	Terrain cab wagon closed 4WD 448PN(AJV8)	Model year from:2006,Model year to:2009	Propshaft	PS900335
	2004.08-2012.08	AT	Rear	Terrain cab wagon closed 4WD 448PN(AJV8)	Model year from:2003,Model year to:2005	Propshaft	PS900339
	2004.08-2012.08	AT	Front	Terrain cab wagon closed 4WD 448PN(AJV8)	Chassis no. to:5A999999	Joint,propshaft	602494
	2004.08-2012.08	AT	Rear	Terrain cab wagon closed 4WD 448PN(AJV8)	Chassis no. to:5A999999	Joint,propshaft	602495
4.4 (224 kw)	2002.09-2009.12	AT	Front	Closed Off-Road Vehicle 4WD 448PN	Model year from:2006,Model year to:2009	Propshaft	PS900333
	2002.09-2009.12	AT	Front	Closed Off-Road Vehicle 4WD 448PN	Model year from:2003,Model year to:2005	Propshaft	PS900334
	2002.09-2009.12	AT	Rear	Closed Off-Road Vehicle 4WD 448PN	Model year from:2006,Model year to:2009	Propshaft	PS900335
	2002.09-2009.12	AT	Rear	Closed Off-Road Vehicle 4WD 448PN	Model year from:2003,Model year to:2005	Propshaft	PS900339
4.4 (225 kw)	2004.08-2012.08	AT	Front	Terrain cab wagon closed 4WD 448PN(AJV8)	Model year from:2006,Model year to:2009	Propshaft	PS900333
	2004.08-2012.08	AT	Rear	Terrain cab wagon closed 4WD 448PN(AJV8)	Model year from:2006,Model year to:2009	Propshaft	PS900335
	2004.08-2012.08		Front	Terrain cab wagon closed 4WD 448PN(AJV8)		Joint,propshaft	601910
	2004.08-2012.08	AT	Front	Terrain cab wagon closed 4WD 448PN(AJV8)	Chassis no. to:5A999999	Joint,propshaft	602494
	2004.08-2012.08	AT	Rear	Terrain cab wagon closed 4WD 448PN(AJV8)	Chassis no. to:5A999999	Joint,propshaft	602495
4.4 (230 kw)	2010.09-2012.08		Front	Terrain cab wagon closed 4WD 448DT(DITC)		Joint,propshaft	601910
	2010.09-2012.08	AT	Front	Terrain cab wagon closed 4WD 448DT(DITC)	Chassis no. to:5A999999	Joint,propshaft	602494
	2010.09-2012.08	AT	Rear	Terrain cab wagon closed 4WD 448DT(DITC)	Chassis no. to:5A999999	Joint,propshaft	602495
	2010.09-2012.08		Centre	Terrain cab wagon closed 4WD 448DT(DITC)		Center Bearing Support	538671
4.4 (250 kw)	2012.08-2021.09	AT	Front	SUV 4WD 448DT(DITC)		Joint,propshaft	601910
4.6 (160 kw)	1998.11-2002.01	AT	Front	Terrain cab wagon closed 4WD 60D	Model year from:2006	Propshaft	PS900328
4.6 (165 kw)	1994.07-2002.03	AT	Front	Terrain cab wagon closed 4WD 48D/60D	Model year from:2006	Propshaft	PS900328
4.6 (168 kw)	1996.09-2002.03	AT	Front	Terrain cab wagon closed 4WD 46D	Model year from:2006	Propshaft	PS900328
5.0 (276 kw)	2009.09-2012.08	AT	Front	Terrain cab wagon closed 4WD 508PN(AJ133)	Model year from:2010	Propshaft	PS900333
	2009.09-2012.08	AT	Rear	Terrain cab wagon closed 4WD 508PN(AJ133)	Model year from:2010	Propshaft	PS900335
	2009.09-2012.08		Front	Terrain cab wagon closed 4WD 508PN(AJ133)		Joint,propshaft	601910
	2009.09-2012.08	AT	Front	Terrain cab wagon closed 4WD 508PN(AJ133)	Chassis no. to:5A999999	Joint,propshaft	602494
	2009.09-2012.08	AT	Rear	Terrain cab wagon closed 4WD 508PN(AJ133)	Chassis no. to:5A999999	Joint,propshaft	602495
	2013.12-2021.09	AT	Front	SUV 4WD 508PN(AJ133)		Propshaft	PS900530
	2013.12-2021.09	8AT	Rear	SUV 4WD 508PN(AJ133)	Model year to:2017,With locking differential,Long Wheelbase	Propshaft	PS901951
	2013.12-2021.09	AT	Rear	SUV 4WD 508PN(AJ133)	Model year to:2020,Standard wheelbase	Propshaft	PS900536
	2013.12-2021.09	AT	Rear	SUV 4WD 508PN(AJ133)	Model year from:2017,Model year to:2022,With locking differential,short wheelbase	Propshaft	PS901646
	2013.12-2021.09	AT	Front	SUV 4WD 508PN(AJ133)		Joint,propshaft	601910
5.0 (375 kw)	2009.09-2012.08	AT	Front	Terrain cab wagon closed 4WD 508PS(AJ133)	Model year from:2010	Propshaft	PS900333
	2009.09-2012.08	AT	Rear	Terrain cab wagon closed 4WD 508PS(AJ133)	Model year from:2010	Propshaft	PS900335
	2009.09-2012.08		Front	Terrain cab wagon closed 4WD 508PS(AJ133)		Joint,propshaft	601910
	2009.09-2012.08	AT	Front	Terrain cab wagon closed 4WD 508PS(AJ133)	Chassis no. to:5A999999	Joint,propshaft	602494
	2009.09-2012.08	AT	Rear	Terrain cab wagon closed 4WD 508PS(AJ133)	Chassis no. to:5A999999	Joint,propshaft	602495
	2012.08-2021.09	AT	Front	SUV 4WD 508PS(AJ133)	Model year from:2003	Propshaft	PS900530
	2012.08-2021.09	8AT	Rear	SUV 4WD 508PS(AJ133)	Model year to:2017,With locking differential,Long Wheelbase	Propshaft	PS901951
	2012.08-2021.09	AT	Rear	SUV 4WD 508PS(AJ133)	Model year from:2013,Model year to:2020,Standard wheelbase	Propshaft	PS900536
	2012.08-2021.09	AT	Rear	SUV 4WD 508PS(AJ133)	Model year from:2017,Model year to:2022,With locking differential,short wheelbase	Propshaft	PS901646
	2012.08-2021.09	AT	Front	SUV 4WD 508PS(AJ133)		Joint,propshaft	601910
5.0 (386 kw)	2017.11-2021.09	AT	Front	SUV 4WD 508PS(AJ133)		Propshaft	PS900530
	2017.11-2021.09	AT	Rear	SUV 4WD 508PS(AJ133)	Model year from:2013,Model year to:2020,for OE No.:LR071994	Propshaft	PS900536
	2017.11-2021.09	AT	Rear	SUV 4WD 508PS(AJ133)	Model year to:2022;for OE No.:LR082554	Propshaft	PS901646
5.0 (405 kw)	2015.06-2021.09	AT	Front	SUV 4WD 508PS(AJ133)		Propshaft	PS900530
	2015.06-2021.09	8AT	Rear	SUV 4WD 508PS(AJ133)	Model year to:2017,With locking differential,Long Wheelbase	Propshaft	PS901951
	2015.06-2021.09	AT	Rear	SUV 4WD 508PS(AJ133)	Model year from:2013,Model year to:2020,Standard wheelbase	Propshaft	PS900536
	2015.06-2021.09	AT	Rear	SUV 4WD 508PS(AJ133)	Model year from:2017,Model year to:2022,With locking differential,short wheelbase	Propshaft	PS901646
	2015.06-2021.09	AT	Front	SUV 4WD 508PS(AJ133)		Joint,propshaft	601910
5.0 (416 kw)	2017.11-2021.09	AT	Front	SUV 4WD 508PS(AJ133)		Propshaft	PS900530
	2017.11-2021.09	AT	Rear	SUV 4WD 508PS(AJ133)	Model year from:2013,Model year to:2020,for OE No.:LR071994	Propshaft	PS900536
	2017.11-2021.09	AT	Rear	SUV 4WD 508PS(AJ133)	Model year to:2022;for OE No.:LR082554	Propshaft	PS901646
Range Rover Evoque							
2.0 (110 kw)	2015.06-2019.12		Front;Rear	SUV 4WD 204DTD(AJ20D4)		Center Bearing Support	539906
	2015.11-2019.12		Front;Rear	Cabriolet 4WD 204DTD(AJ20D4)		Center Bearing Support	539906
2.0 (132 kw)	2015.05-2019.12		Front;Rear	SUV 4WD 204DTD(AJ20D4)		Center Bearing Support	539906
	2015.11-2019.12		Front;Rear	Cabriolet 4WD 204DTD(AJ20D4)		Center Bearing Support	539906
2.0 (176 kw)	2011.09-2019.12	9AT/6MT	Rear	SUV 4WD 204PT(GTDI)	Chassis no. to:FH999999	Propshaft	PS900336
	2011.09-2019.12	AT	Rear	SUV 4WD 204PT(GTDI)	Model year from:2015	Propshaft	PS901651
	2011.09-2019.12	9AT	-	SUV 4WD 204PT(GTDI)	Model year from:2012,Model year to:2015	Joint,propshaft	602051

	YEAR	TRANSM.	FITTING POSITION	BODY STYLE & DRIVE TYPE & ENGINE	REMARKS	PRODUCT	GSP Ref.
LAND ROVER							
Range Rover Evoque							
2.0 (177 kw)	2011.06-2019.12	9AT/6MT	Rear	SUV 4WD 204PT(GTDI)	Chassis no. to:FH999999	Propshaft	PS900336
	2011.06-2019.12	AT	Rear	SUV 4WD 204PT(GTDI)	Model year from:2015	Propshaft	PS901651
	2011.06-2019.12	9AT	-	SUV 4WD 204PT(GTDI)	Model year from:2012,Model year to:2015	Joint,propshaft	602051
	2011.06-2019.12		Front;Rear	SUV 4WD 204PT(GTDI)		Center Bearing Support	539906
	2015.11-2019.12		Front;Rear	Cabriolet 4WD 204PT(GTDI)		Center Bearing Support	539906
	2017.08-2019.12	9AT	Rear	Cabriolet 4WD PT204(AJ20P4)		Propshaft	PS901650
	2017.08-2019.12	AT	Rear	SUV 4WD PT204(AJ20P4)		Propshaft	PS901651
	2017.08-2019.12		Front;Rear	Cabriolet 4WD PT204(AJ20P4)		Center Bearing Support	539906
	2017.08-2019.12		Front;Rear	SUV 4WD PT204(AJ20P4)		Center Bearing Support	539906
	2017.08-2019.12		Front;Rear	SUV 4WD 204DTA(AJ20D4)		Center Bearing Support	539906
	2017.08-2019.12		Front;Rear	Cabriolet 4WD 204DTA(AJ20D4)		Center Bearing Support	539906
2.0 (213 kw)	2017.08-2019.12	AT	Rear	SUV 4WD PT204(AJ20P4)		Propshaft	PS901651
	2017.08-2019.12		Front;Rear	SUV 4WD PT204(AJ20P4)		Center Bearing Support	539906
2.2 (110 kw)	2011.06-2019.12		Front;Rear	SUV 4WD 224DT(DW12BTED4)		Center Bearing Support	539906
2.2 (140 kw)	2011.06-2019.12		Front;Rear	SUV 4WD 224DT(DW12BTED4)		Center Bearing Support	539906
Range Rover Sport							
2.0 (177 kw)	2016.10-2022.03	8AT	Rear	SUV 4WD 204DTA(AJ20D4)		Propshaft	PS901645
2.0 (297 kw)	2017.10-2022.03	8AT	Rear	SUV 4WD PT204(AJ20P4)	Model year to:2022,Chassis no. from:JA000001,2-speed transfer case	Propshaft	PS901652
2.7 (140 kw)	2005.02-2009.09	AT/MT	Front	SUV 4WD 276DT(TDV6)		Joint,propshaft	601910
	2005.02-2009.09		Centre	SUV 4WD 276DT(TDV6)		Center Bearing Support	538628
3.0 (155 kw)	2010.05-2013.06	AT/MT	Front	SUV 4WD 306DT(TDV6)		Joint,propshaft	601910
	2010.05-2013.06		Centre	SUV 4WD 306DT(TDV6)		Center Bearing Support	538628
	2013.07-2018.12	AT	Front	SUV 4WD 306DT(TDV6)	Model year from:2016	Propshaft	PS900530
	2013.07-2018.12	AT	Front	SUV 4WD 306DT(TDV6)	Date to:2017.12	Joint,propshaft	601910
3.0 (180 kw)	2009.09-2013.06	AT/MT	Front	SUV 4WD 306DT(TDV6)		Joint,propshaft	601910
3.0 (183 kw)	2010.09-2013.06	AT/MT	Front	SUV 4WD 306DT(TDV6)		Joint,propshaft	601910
	2010.09-2013.06		Centre	SUV 4WD 306DT(TDV6)		Center Bearing Support	538628
	2013.07-2022.03	AT	Front	SUV 4WD 306DT(TDV6)	Model year from:2016,Model year to:2021	Propshaft	PS900530
	2013.07-2022.03	AT	Rear	SUV 4WD 306DT(TDV6)	Model year from:2017,Model year to:2021	Propshaft	PS901646
	2013.07-2022.03	AT	Front	SUV 4WD 306DT(TDV6)		Joint,propshaft	601910
	2020.07-2022.03	AT	Front	SUV 4WD DT306(AJ20D6)	Model year to:2021	Propshaft	PS900530
	2020.07-2022.03	8AT	Rear	SUV 4WD DT306(AJ20D6)	Model year to:2022,Chassis no. from:JA000001,2-speed transfer case	Propshaft	PS901652
3.0 (188 kw)	2011.06-2013.06	AT/MT	Front	SUV 4WD 306DT(TDV6)		Joint,propshaft	601910
	2011.06-2013.06		Centre	SUV 4WD 306DT(TDV6)		Center Bearing Support	538628
3.0 (190 kw)	2013.07-2019.12	AT	Front	SUV 4WD 306DT(TDV6)	Model year from:2016,Model year to:2021	Propshaft	PS900530
	2013.07-2019.12	AT	Rear	SUV 4WD 306DT(TDV6)	Model year from:2017,Model year to:2021	Propshaft	PS901646
	2013.07-2019.12	AT	Front	SUV 4WD 306DT(TDV6)	Date to:2015.12	Joint,propshaft	601910
3.0 (215 kw)	2013.07-2016.12	AT	Front	SUV 4WD 306DT(TDV6)		Joint,propshaft	601910
3.0 (221 kw)	2020.07-2022.03	AT	Front	SUV 4WD DT306(AJ20D6)	Model year to:2021	Propshaft	PS900530
	2020.07-2022.03	8AT	Rear	SUV 4WD DT306(AJ20D6)	Model year to:2022,Chassis no. from:JA000001,2-speed transfer case	Propshaft	PS901652
3.0 (225 kw)	2014.09-2022.03	AT	Front	SUV 4WD 306DT(TDV6)	Model year from:2016,Model year to:2021	Propshaft	PS900530
	2014.09-2022.03	AT	Rear	SUV 4WD 306DT(TDV6)	Model year from:2017,Model year to:2021	Propshaft	PS901646
	2014.09-2022.03	AT	Front	SUV 4WD 306DT(TDV6)		Joint,propshaft	601910
3.0 (250 kw)	2013.07-2019.12	AT	Front	SUV 4WD 306PS(AJ126)	Model year from:2014	Propshaft	PS900530
	2013.07-2019.12	AT	Rear	SUV 4WD 306PS(AJ126)	Model year from:2014,Model year to:2017;2-speed transfer case	Propshaft	PS900536
	2013.07-2019.12	AT	Rear	SUV 4WD 306PS(AJ126)	Model year from:2014,Model year to:2016;1-speed transfer case	Propshaft	PS900537
	2013.07-2019.12	AT	Rear	SUV 4WD 306PS(AJ126)	Model year from:2017	Propshaft	PS901646
	2013.10-2017.12	AT	Front	SUV 4WD 306DT(TDV6)		Joint,propshaft	601910
3.0 (258 kw)	2020.07-2022.03	AT	Front	SUV 4WD DT306(AJ20D6)	Model year to:2021	Propshaft	PS900530
	2020.07-2022.03	8AT	Rear	SUV 4WD DT306(AJ20D6)	Model year to:2022,Chassis no. from:JA000001,2-speed transfer case	Propshaft	PS901652
3.0 (260 kw)	2015.06-2017.12	AT	Front	SUV 4WD 306DT(TDV6)		Joint,propshaft	601910
3.0 (265 kw)	2019.06-2022.03	AT	Front	SUV 4WD PT306(AJ20P6)	Model year to:2020	Propshaft	PS900530
	2019.08-2022.03	8AT	Rear	SUV 4WD PT306(AJ20P6)	Model year to:2022,Chassis no. from:JA000001,2-speed transfer case	Propshaft	PS901652
	2019.08-2022.03	AT	Rear	SUV 4WD PT306(AJ20P6)	Model year to:2020;for OE No.:LR082554	Propshaft	PS901646
3.0 (280 kw)	2015.06-2019.12	AT	Front	SUV 4WD 306PS(AJ126)		Propshaft	PS900530
	2015.06-2019.12	AT	Rear	SUV 4WD 306PS(AJ126)	Model year to:2017;2-speed transfer case	Propshaft	PS900536
	2015.06-2019.12	AT	Rear	SUV 4WD 306PS(AJ126)	Model year from:2014,Model year to:2016;1-speed transfer case	Propshaft	PS900537
	2015.06-2019.12	AT	Rear	SUV 4WD 306PS(AJ126)	Model year from:2017	Propshaft	PS901646
3.0 (294 kw)	2019.02-2022.03	AT	Front	SUV 4WD PT306(AJ20P6)	Model year to:2020	Propshaft	PS900530
	2019.08-2022.03	8AT	Rear	SUV 4WD PT306(AJ20P6)	Model year to:2022,Chassis no. from:JA000001,2-speed transfer case	Propshaft	PS901652
3.6 (200 kw)	2006.04-2012.12	AT/MT	Front	SUV 4WD 368DT(LION)	Date from:2007.01	Joint,propshaft	601910
	2006.04-2012.12		Centre	SUV 4WD 368DT(LION)		Center Bearing Support	538628
4.2 (287 kw)	2005.02-2013.06	6AT	Front	SUV 4WD 428PS(AJV8)	Model year from:2006,Model year to:2009	Propshaft	PS900324
	2005.02-2013.06	6AT	Rear	SUV 4WD 428PS(AJV8)	Model year from:2006,Model year to:2009	Propshaft	PS900337

	YEAR	TRANSM.	FITTING POSITION	BODY STYLE & DRIVE TYPE & ENGINE	REMARKS	PRODUCT	GSP Ref.
LAND ROVER							
Range Rover Sport							
4.2 (287 kw)	2005.02-2013.06	AT/MT	Front	SUV 4WD 428PS(AJV8)		Joint,propshaft	601910
	2005.02-2013.06		Centre	SUV 4WD 428PS(AJV8)		Center Bearing Support	538628
4.2 (291 kw)	2006.01-2010.02	AT	Front	SUV 4WD 428PS(AJV8)	Model year to:2009	Propshaft	PS900324
	2006.01-2010.02	6AT	Rear	SUV 4WD 428PS(AJV8)	Model year from:2006	Propshaft	PS900337
4.2 (298 kw)	2005.09-2010.02	AT	Front	SUV 4WD 428PS(AJV8)	Model year from:2006,Model year to:2009	Propshaft	PS900324
	2005.09-2010.02	6AT	Rear	SUV 4WD 428PS(AJV8)	Model year from:2006,Model year to:2009	Propshaft	PS900337
4.4 (220 kw)	2005.02-2013.12	AT	Front	SUV 4WD 448PN(AJV8)	Model year from:2006,Model year to:2009	Propshaft	PS900324
	2005.02-2013.12	6AT	Rear	SUV 4WD 448PN(AJV8)	Model year from:2006,Model year to:2009	Propshaft	PS900337
	2005.02-2013.12	AT/MT	Front	SUV 4WD 448PN(AJV8)		Joint,propshaft	601910
	2005.02-2013.12		Centre	SUV 4WD 448PN(AJV8)		Center Bearing Support	538628
4.4 (250 kw)	2013.10-2022.03	AT	Front	SUV 4WD 448DT(DITC)		Joint,propshaft	601910
5.0 (276 kw)	2009.07-2013.06	AT	Front	SUV 4WD 508PN(AJ133)	Model year from:2010	Propshaft	PS900324
	2009.07-2013.06	6AT	Rear	SUV 4WD 508PN(AJ133)	Model year from:2010	Propshaft	PS900337
	2009.07-2013.06	AT/MT	Front	SUV 4WD 508PN(AJ133)		Joint,propshaft	601910
	2009.07-2013.06		Centre	SUV 4WD 508PN(AJ133)		Center Bearing Support	538628
5.0 (372 kw)	2010.01-2013.06	AT	Front	SUV 4WD 508PS(AJ133)	Model year from:2010	Propshaft	PS900324
	2010.01-2013.06	6AT	Rear	SUV 4WD 508PS(AJ133)	Model year from:2010	Propshaft	PS900337
	2010.01-2013.06	AT/MT	Front	SUV 4WD 508PS(AJ133)		Joint,propshaft	601910
	2010.01-2013.06		Centre	SUV 4WD 508PS(AJ133)		Center Bearing Support	538628
5.0 (375 kw)	2009.09-2013.06	AT	Front	SUV 4WD 508PS(AJ133)	Model year from:2010	Propshaft	PS900324
	2009.09-2013.06	6AT	Rear	SUV 4WD 508PS(AJ133)	Model year from:2010	Propshaft	PS900337
	2009.09-2013.06	AT/MT	Front	SUV 4WD 508PS(AJ133)		Joint,propshaft	601910
	2013.07-2018.12	AT	Front	SUV 4WD 508PS(AJ133)	Model year from:2014	Propshaft	PS900530
	2013.07-2018.12	AT	Rear	SUV 4WD 508PS(AJ133)	Model year from:2014,Model year to:2017;2-speed transfer case	Propshaft	PS900536
	2013.07-2018.12	AT	Rear	SUV 4WD 508PS(AJ133)	Model year from:2014,Model year to:2016;1-speed transfer case	Propshaft	PS900537
	2013.07-2018.12	AT	Front	SUV 4WD 508PS(AJ133)		Joint,propshaft	601910
5.0 (386 kw)	2017.11-2022.03	AT	Front	SUV 4WD 508PS(AJ133)	Model year to:2022	Propshaft	PS900530
	2017.11-2022.03	AT	Rear	SUV 4WD 508PS(AJ133)		Propshaft	PS901646
5.0 (405 kw)	2014.01-2018.12	AT	Front	SUV 4WD 508PS(AJ133)		Propshaft	PS900530
	2014.01-2018.12	AT	Rear	SUV 4WD 508PS(AJ133)	Model year from:2014,Model year to:2017;2-speed transfer case	Propshaft	PS900536
	2014.01-2018.12	AT	Rear	SUV 4WD 508PS(AJ133)	Model year from:2014,Model year to:2016;1-speed transfer case	Propshaft	PS900537
	2014.01-2018.12	AT	Front	SUV 4WD 508PS(AJ133)		Joint,propshaft	601910
5.0 (423 kw)	2017.11-2022.03	AT	Front	SUV 4WD 508PS(AJ133)	Model year to:2022	Propshaft	PS900530
	2017.11-2022.03	AT	Rear	SUV 4WD 508PS(AJ133)		Propshaft	PS901646
Range Rover Velar							
2.0 (132 kw)	2017.03-	AT	Front	SUV 4WD 204DTD(AJ20D4)	Model year from:2018,Model year to:2019	Propshaft	PS900596
2.0 (177 kw)	2017.03-	AT	Front	SUV 4WD 204DTA(AJ20D4)	Model year from:2018,Model year to:2019	Propshaft	PS900596
	2017.03-	AT	Rear	SUV 4WD 204DTA(AJ20D4)		Propshaft	PS900592
	2017.03-	AT	-	SUV 4WD 204DTA(AJ20D4)		Joint,propshaft	602071
	2017.03-		Centre	SUV 4WD 204DTA(AJ20D4)		Center Bearing Support	539919
2.0 (184 kw)	2017.03-	AT	Front	SUV 4WD PT204(AJ20P4)	Model year from:2018,Model year to:2020;CV JOINT STYLE	Propshaft	PS900530
	2017.03-	AT	Front	SUV 4WD PT204(AJ20P4)	Model year from:2018;FLANGE STYLE	Propshaft	PS900596
	2017.03-	AT	Rear	SUV 4WD PT204(AJ20P4)	For OE No.:HK834365EB	Propshaft	PS900592
	2017.03-	AT	Rear	SUV 4WD PT204(AJ20P4)	Model year from:2019,Model year to:2020;for OE No.:LR082554	Propshaft	PS901646
	2017.03-	AT	-	SUV 4WD PT204(AJ20P4)		Joint,propshaft	602071
	2017.03-		Centre	SUV 4WD PT204(AJ20P4)		Center Bearing Support	539919
2.0 (221 kw)	2017.03-	AT	Front	SUV 4WD PT204(AJ20P4)	Model year from:2018,Model year to:2020;CV JOINT STYLE	Propshaft	PS900530
	2017.03-	AT	Front	SUV 4WD PT204(AJ20P4)	Model year from:2018;FLANGE STYLE	Propshaft	PS900596
	2017.03-	AT	Rear	SUV 4WD PT204(AJ20P4)	Model year from:2019,Model year to:2020	Propshaft	PS901646
3.0 (250 kw)	2018.04-	AT	Front	SUV 4WD 306PS(AJ126)	Model year from:2018,Model year to:2020	Propshaft	PS900530
	2018.04-	AT	Rear	SUV 4WD 306PS(AJ126)	Model year to:2019;for OE No.:LR082554	Propshaft	PS901646
	2018.04-	AT	-	SUV 4WD 306PS(AJ126)		Joint,propshaft	602071
	2018.04-		Centre	SUV 4WD 306PS(AJ126)		Center Bearing Support	539919
	2021.03-	AT	-	SUV 4WD PT306(AJ20P6)		Joint,propshaft	602071
	2021.03-		Centre	SUV 4WD PT306(AJ20P6)		Center Bearing Support	539919
3.0 (280 kw)	2017.03-	AT	Front	SUV 4WD 306PS(AJ126)	Model year to:2020	Propshaft	PS900530
	2017.03-	AT	Rear	SUV 4WD 306PS(AJ126)	Model year from:2018,Model year to:2019;for OE No.:LR082554	Propshaft	PS901646
	2017.03-	AT	-	SUV 4WD 306PS(AJ126)		Joint,propshaft	602071
	2017.03-		Centre	SUV 4WD 306PS(AJ126)		Center Bearing Support	539919
3.0 (295 kw)	2021.03-	AT	-	SUV 4WD PT306(AJ20P6)		Joint,propshaft	602071
	2021.03-		Centre	SUV 4WD PT306(AJ20P6)		Center Bearing Support	539919

	YEAR	TRANSM.	FITTING POSITION	BODY STYLE & DRIVE TYPE & ENGINE	REMARKS	PRODUCT	GSP Ref.
LDV							
T60							
2.8 (110 kw)	2017.07-	AT	Front	Pickup 4WD SC28R150Q5		Propshaft	PS901355
	2017.07-	AT	Rear	Pickup 4WD SC28R150Q5		Propshaft	PS901356
LEXUS							
GS 250							
2.5 (154 kw)	2012.01-		Centre	Saloon RWD 4GRFSE		Center Bearing Support Kit	539066S
GS 300							
3.0 (156 kw)	1991.06-1997.08		Rear	Saloon RWD 2JZGE	for left-hand drive vehicles	Flexible Coupling	517649
3.0 (161 kw)	2000.08-2005.03		Centre	Saloon RWD 2JZGE		Center Bearing Support	539020
	2000.08-2005.03		Rear	Saloon RWD 2JZGE	for left-hand drive vehicles	Flexible Coupling	517649
3.0 (163 kw)	1997.09-2000.07		Centre	Saloon RWD 2JZGE		Center Bearing Support	539020
	1997.09-2000.07		Rear	Saloon RWD 2JZGE	for left-hand drive vehicles	Flexible Coupling	517649
3.0 (183 kw)	2005.04-2011.11		Centre	Saloon RWD 3GRFSE		Center Bearing Support Kit	539066S
GS 300h							
2.5 (164 kw)	2013.10-		Centre	Saloon RWD 2ARFSE		Center Bearing Support Kit	539066S
GS 400							
4.0 (216 kw)	1997.08-2000.12		Centre	Saloon RWD 1UZFE		Center Bearing Support	539020
	1997.08-2000.12		Rear	Saloon RWD 1UZFE	AT	Flexible Coupling	517649
GS 430							
4.3 (208 kw)	2000.07-2005.12		Centre	Saloon RWD 3UZFE		Center Bearing Support	539020
	2000.07-2005.12		Rear	Saloon RWD 3UZFE	AT,for left-hand drive vehicles	Flexible Coupling	517649
	2005.04-2011.11		Centre	Saloon RWD 3UZFE		Center Bearing Support Kit	539066S
GS 450h							
3.5 (254 kw)	2006.02-2011.11		Centre	Saloon RWD 2GRFSE		Center Bearing Support Kit	539066S
GS 460							
4.6 (255 kw)	2007.09-2011.11		Centre	Saloon RWD 1URFSE		Center Bearing Support Kit	539066S
GS F							
5.0 (348 kw)	2015.09-		Centre	Saloon RWD 2UR-GSE		Center Bearing Support Kit	539066S
5.0 (351 kw)	2015.09-		Centre	Saloon RWD 2URGSE		Center Bearing Support Kit	539066S
GX 400							
4.0 (202 kw)	2012.05-	5AT	Front	SUV 4WD 1GR-FE	Date to:2013.08	Propshaft	PS900466
IS 200							
2.0 (114 kw)	1999.01-2005.07		Centre	Saloon RWD 1GFE		Center Bearing Support	539071
	2002.08-2005.07		Centre	Estate RWD 1GFE		Center Bearing Support	539071
IS 200d							
2.2 (110 kw)	2010.07-2012.07		Centre	Saloon RWD 2ADFTV		Center Bearing Support Kit	539066S
IS 220d							
2.2 (130 kw)	2005.08-2013.04		Centre	Saloon RWD 2ADFHV		Center Bearing Support Kit	539066S
IS 250							
2.5 (153 kw)	2005.08-2013.04		Centre	Saloon RWD 4GRFSE		Center Bearing Support Kit	539066S
	2013.04-2015.08		Centre	Saloon RWD 4GRFSE		Center Bearing Support Kit	539066S
IS 300							
3.0 (157 kw)	2001.07-2005.07		Centre	Saloon RWD 2JZGE		Center Bearing Support	539071
	2001.07-2005.07		Centre	Saloon RWD 2JZGE		Center Bearing Support Kit	538689S
	2001.07-2005.10		Centre	Estate RWD 2JZGE		Center Bearing Support	539071
IS 300h							
2.5 (164 kw)	2013.04-2020.09		Centre	Saloon RWD 2ARFSE		Center Bearing Support Kit	539066S
ISF							
5.0 (311 kw)	2007.12-2013.04		Centre	Saloon RWD 2URGSE		Center Bearing Support Kit	539066S
LS 400							
4.0 (194 kw)	1994.10-1997.12		Rear	Saloon RWD 1UZFE	Date from:1997.07,for left-hand drive vehicles	Flexible Coupling	517649
4.0 (203 kw)	1998.10-2000.07		Rear	Saloon RWD 1UZFE	for left-hand drive vehicles	Flexible Coupling	517649
4.0 (209 kw)	1997.08-1998.09		Rear	Saloon RWD 1UZFE	for left-hand drive vehicles	Flexible Coupling	517649
4.0 (216 kw)	1997.10-2000.07		Rear	Saloon RWD 1UZFE	for left-hand drive vehicles	Flexible Coupling	517649
LS 430							
4.3 (207 kw)	2000.08-2006.12		Centre	Saloon RWD 3UZFE		Center Bearing Support	539020
	2000.08-2006.12		Rear	Saloon RWD 3UZFE	for left-hand drive vehicles	Flexible Coupling	517649
4.3 (208 kw)	2000.08-2006.08		Centre	Saloon RWD 3UZFE		Center Bearing Support	539020
	2000.08-2006.08		Rear	Saloon RWD 3UZFE	for left-hand drive vehicles	Flexible Coupling	517649
4.3 (216 kw)	2000.08-2006.08		Rear	Saloon RWD 3UZ-FE		Flexible Coupling	517649
LS 460							
4.6 (255 kw)	2006.08-		Centre	Saloon RWD 1URFE		Center Bearing Support Kit	539066S
4.6 (270 kw)	2008.12-		Centre	Saloon 4WD 1URFSE		Center Bearing Support Kit	539066S
4.6 (272 kw)	2012.09-		Centre	Saloon 4WD 1URFSE		Center Bearing Support Kit	539066S

	YEAR	TRANSM.	FITTING POSITION	BODY STYLE & DRIVE TYPE & ENGINE	REMARKS	PRODUCT	GSP Ref.
LEXUS							
LS 460							
4.6 (280 kw)	2006.08-		Centre	Saloon RWD 1URFSE		Center Bearing Support Kit	539066S
4.6 (285 kw)	2012.09-		Centre	Saloon RWD 1URFSE		Center Bearing Support Kit	539066S
NX 200							
2.0 (110 kw)	2014.11-	CVT	Rear	SUV 4WD 3ZRFAE	Date to:2017.08	Propshaft	PS900493
	2014.11-		Centre	SUV 4WD 3ZRFAE		Center Bearing Support	539940
NX 200t							
2.0 (173 kw)	2014.07-2017.09		Centre	SUV 4WD 8AR-FTS		Center Bearing Support	539940
2.0 (175 kw)	2014.07-	6AT	Rear	SUV 4WD 8ARFTS	Date from:2014.12,Date to:2017.08	Propshaft	PS900493
	2014.07-		Centre	SUV 4WD 8ARFTS		Center Bearing Support	539940
NX 300							
2.0 (175 kw)	2017.09-		Centre	SUV 4WD 8ARFTS		Center Bearing Support	539940
NX 300h							
2.5 (145 kw)	2014.07-		Centre	SUV 4WD 2ARFXE		Center Bearing Support	539940
RC 300h							
2.5 (164 kw)	2014.09-		Centre	Coupe RWD 2ARFSE		Center Bearing Support Kit	539066S
RCF							
5.0 (330 kw)	2014.08-		Centre	Coupe RWD 2URGSE		Center Bearing Support Kit	539066S
5.0 (344 kw)	2014.08-		Centre	Coupe RWD 2URGSE		Center Bearing Support Kit	539066S
5.0 (351 kw)	2014.09-		Centre	Coupe RWD 2URGSE		Center Bearing Support Kit	539066S
RX 200t							
2.0 (175 kw)	2015.10-2017.12	6AT	Rear	SUV 4WD 8ARFTS		Propshaft	PS900477
RX 300							
2.0 (175 kw)	2017.12-	6AT	Rear	SUV 4WD 8ARFTS	Date to:2019.07	Propshaft	PS900477
3.0 (148 kw)	2000.07-2003.02	4AT	Rear	SUV 4WD 1MZFE		Propshaft	PS900340
	2000.07-2003.02		Front	SUV 4WD 1MZFE		Center Bearing Support	539067
	2000.07-2003.02		Rear	SUV 4WD 1MZFE		Center Bearing Support	539018
	2000.07-2003.02		Front	SUV 4WD 1MZFE		Center Bearing Support Kit	539068S
3.0 (150 kw)	2003.05-2008.12	5AT	Rear	SUV 4WD 1MZFE	Date to:2005.12	Propshaft	PS900503
3.0 (164 kw)	1998.01-2003.02	4AT	Rear	SUV 4WD 1MZFE		Propshaft	PS900340
RX 330							
3.3 (171 kw)	2003.04-2008.12	5AT	Rear	SUV 4WD 3MZFE	Date to:2005.12	Propshaft	PS900503
	2003.04-2008.12		Rear	SUV 4WD 3MZFE		Center Bearing Support	539018
RX 350							
3.5 (203 kw)	2006.02-2009.06	5AT	Rear	SUV 4WD 2GRFE	Date to:2008.11	Propshaft	PS900503
3.5 (204 kw)	2009.01-2015.09	AT	Rear	SUV 4WD 2GRFE		Propshaft	PS901428
	2009.01-2015.09		Front	SUV 4WD 2GRFE	AT,Vehicle Production Country:Japan,North America	Center Bearing Support	539067
	2009.01-2015.09		Rear	SUV 4WD 2GRFE		Center Bearing Support	539018
	2009.01-2015.09		Front	SUV 4WD 2GRFE		Center Bearing Support Kit	539068S
3.5 (206 kw)	2009.04-2015.09	AT	Rear	SUV 4WD 2GRFE		Propshaft	PS901428
3.5 (213 kw)	2017.12-		Front	SUV 4WD 2GR-FKS	AT	Center Bearing Support	539067
3.5 (215 kw)	2015.10-		Front	SUV 4WD 2GR-FKS	AT	Center Bearing Support	539067
3.5 (216 kw)	2015.10-	8AT	Rear	SUV 4WD 2GRFKS		Propshaft	PS900477
	2015.10-		Front	SUV 4WD 2GRFKS	AT	Center Bearing Support	539067
3.5 (217 kw)	2015.10-		Front	SUV 4WD 2GR-FKS	AT	Center Bearing Support	539067
	2015.10-		Rear	SUV 4WD 2GR-FKS		Center Bearing Support	539018
3.5 (218 kw)	2015.10-		Front	SUV 4WD 2GR-FKS	AT	Center Bearing Support	539067
	2015.10-		Rear	SUV 4WD 2GR-FKS		Center Bearing Support	539018
3.5 (221 kw)	2015.10-	8AT	Rear	SUV 4WD 2GRFKS		Propshaft	PS900477
	2015.10-		Front	SUV 4WD 2GRFKS	AT	Center Bearing Support	539067
	2015.10-		Rear	SUV 4WD 2GRFKS		Center Bearing Support	539018
3.5 (224 kw)	2015.10-		Front	SUV 4WD 2GR-FKS	AT	Center Bearing Support	539067
RX 450h							
3.5 (220 kw)	2009.01-2015.09	AT	Rear	SUV 4WD 2GRFXE	Model year from:2014	Propshaft	PS901428
SC 300							
3.0 (162 kw)	1995.01-2000.03		Rear	Coupe RWD 2JZGE	MT	Flexible Coupling	517649
SC 400							
4.0 (186 kw)	1991.06-2000.07		Rear	Coupe RWD 1UZFE	AT	Flexible Coupling	517649
4.0 (194 kw)	1991.08-1997.12		Rear	Coupe RWD 1UZFE	AT	Flexible Coupling	517649
SC 430							
4.3 (210 kw)	2001.08-2010.07		Centre	Cabriolet RWD 3UZFE		Center Bearing Support	539020
	2001.08-2010.07		Rear	Cabriolet RWD 3UZFE	Date to:2005.08,AT	Flexible Coupling	517649

	YEAR	TRANSM.	FITTING POSITION	BODY STYLE & DRIVE TYPE & ENGINE	REMARKS	PRODUCT	GSP Ref.
LINCOLN							
Aviator							
4.6 (225 kw)	2002.06-2005.12	AT	Front	SUV 4WD V99V	Model year from:2003	Propshaft	PS900576
MKC							
2.0 (149 kw)	2014.10-	6AT	Rear	SUV 4WD TPWA	Model year from:2015,Model year to:2019	Propshaft	PS900225
2.0 (179 kw)	2014.03-	6AT	Rear	SUV 4WD TPWA	Model year from:2015,Model year to:2019	Propshaft	PS900225
2.3 (213 kw)	2014.08-	6AT	Rear	SUV 4WD C23HD0D	Model year from:2015,Model year to:2019	Propshaft	PS900225
MKS							
3.5 (261 kw)	2010.01-	AT	Rear	Saloon 4WD C35PDTD	Model year from:2014,Model year to:2016	Propshaft	PS900240
3.5 (272 kw)	2012.03-	AT	Rear	Saloon 4WD C35PDTD	Model year from:2014,Model year to:2016	Propshaft	PS900240
3.7 (227 kw)	2012.09-	AT	Rear	Saloon 4WD C37PDED	Model year from:2014,Model year to:2016	Propshaft	PS900240
MKT							
3.5 (261 kw)	2010.01-	6AT	Rear	SUV 4WD T35PDTD		Propshaft	PS901517
MKX							
3.5 (198 kw)	2006.12-2010.12	6AT	Rear	SUV 4WD T35PDED	Model year from:2009,Model year to:2010	Propshaft	PS900224
	2006.12-2010.12	6AT	Rear	SUV 4WD T35PDED	Model year from:2007,Model year to:2008	Propshaft	PS900236
3.7 (227 kw)	2010.09-	AT	Rear	SUV 4WD T37PDED	Model year to:2015	Propshaft	PS900224
MKZ							
2.0 (101 kw)	2017.04-	AT	Rear	Saloon FWD	Model year to:2020	Propshaft	PS901518
2.0 (140 kw)	2012.09-	AT	Rear	Saloon FWD C20EDEF	Model year from:2013,Model year to:2020	Propshaft	PS901518
2.0 (172 kw)	2016.06-	AT	Rear	Saloon 4WD TPWA	Model year to:2020	Propshaft	PS901518
2.0 (179 kw)	2012.09-2016.06	AT	Rear	Saloon 4WD TPWA		Propshaft	PS901518
2.0 (183 kw)	2016.06-	AT	Rear	Saloon 4WD TPWA	Model year to:2020	Propshaft	PS901518
3.7 (224 kw)	2012.09-	AT	Rear	Saloon 4WD C37PDED	Model year from:2014,Model year to:2015	Propshaft	PS900224
Navigator							
3.5 (261 kw)	2015.11-2017.11	6AT	Front	SUV 4WD T35PDTD		Propshaft	PS900239
3.5 (287 kw)	2015.01-2017.11	6AT	Front	SUV 4WD T35PDTD		Propshaft	PS900239
5.4 (224 kw)	2006.09-2008.12	6AT	Front	SUV 4WD T54USEM		Propshaft	299302
5.4 (231 kw)	2008.09-2014.12		Front	SUV 4WD T54USEM		Joint,propshaft	801331
	2008.09-2014.12		Front	SUV RWD T54USEM		Joint,propshaft	801331
MAXUS							
T60							
2.8 (110 kw)	2016.12-	AT	Front	Pickup 4WD SC28R150Q5		Propshaft	PS901355
	2016.12-	AT	Rear	Pickup 4WD SC28R150Q5		Propshaft	PS901356
MAZDA							
B-Serie							
2.5 (63 kw)	1996.02-1999.06		-	Pickup 4WD WLE7		Center Bearing Support	539057
B-series							
2.5 (64 kw)	1996.05-1999.02		-	Platform/Chassis RWD WL-T		Center Bearing Support	539057
B1600							
1.6 (60 kw)	1985.01-1996.03		Centre	Pickup RWD F650/F691		Center Bearing Support	539056
B2200							
2.2 (47 kw)	1985.01-1996.03		Centre	Pickup RWD R290		Center Bearing Support	539056
	1988.01-1996.03		Centre	Platform/Chassis RWD R290		Center Bearing Support	539056
2.2 (71 kw)	1991.08-1996.03		-	Pickup RWD F268		Center Bearing Support	539057
	1991.08-1996.03		-	Platform/Chassis RWD F2L8		Center Bearing Support	539057
B2500							
2.5 (57 kw)	1998.09-1999.06		-	Pickup 4WD WL31		Center Bearing Support	539057
	1998.09-2006.07		Centre	Pickup 4WD WL81		Center Bearing Support	538643
	1998.09-2006.07		Centre	Pickup 4WD WL81		Center Bearing Support Kit	538684S
	1999.06-2006.07		Centre	Pickup RWD R587/WL81		Center Bearing Support	538643
2.5 (61 kw)	1999.11-2001.12		-	Pickup 4WD WL91		Center Bearing Support	539057
2.5 (62 kw)	2002.12-2006.07		Centre	Pickup RWD WLE7		Center Bearing Support	538643
2.5 (63 kw)	1996.02-1999.06		-	Pickup 4WD WL31		Center Bearing Support	539057
	1996.02-1999.06		-	Pickup RWD WL31		Center Bearing Support	539057
2.5 (64 kw)	1996.04-1999.02		-	Pickup RWD WL		Center Bearing Support	539057
2.5 (80 kw)	1999.06-2006.07		Centre	Pickup 4WD R581/MD25TI/WL84/WLF1/WLF2	Inner diameter:180mm	Center Bearing Support	538643
	1999.06-2006.07		-	Pickup 4WD R581/MD25TI/WL84/WLF1/WLF2	Inner diameter:160mm	Center Bearing Support	539057
	1999.06-2006.07		Centre	Pickup 4WD R581/MD25TI/WL84/WLF1/WLF2		Center Bearing Support Kit	538684S
	2002.08-2006.11		-	Pickup RWD WL84		Center Bearing Support	539057
B2600							
2.6 (73 kw)	1987.01-1998.12		-	Pickup 4WD 4G54		Center Bearing Support	539057
2.6 (90 kw)	1999.02-2002.07		Centre	Pickup 4WD G6T1/R585		Center Bearing Support	538643
	1999.02-2002.07		Centre	Pickup 4WD G6T1/R585		Center Bearing Support Kit	538684S

	YEAR	TRANSM.	FITTING POSITION	BODY STYLE & DRIVE TYPE & ENGINE	REMARKS	PRODUCT	GSP Ref.
MAZDA							
BT50							
2.2 (88 kw)	2011.11-	6MT	Rear	Pickup RWD P4-AT		Propshaft	PS901341
	2011.11-	AT/MT	Rear	Pickup 4WD P4-AT		Propshaft	PS901342
2.2 (92 kw)	2012.12-	6MT/6AT	Front	Pickup 4WD P4AT		Propshaft	PS901357
2.2 (110 kw)	2011.11-2020.06	6MT	Rear	Pickup RWD P4-AT		Propshaft	PS901341
2.5 (80 kw)	2008.04-2012.08	AT/MT	Rear	Pickup 4WD WL-T		Propshaft	PS900583
	2008.04-2012.08		Centre	Pickup 4WD WL-T		Center Bearing Support	539070
2.5 (105 kw)	2006.08-2013.06	AT/MT	Rear	Pickup 4WD WLAA		Propshaft	PS900583
	2006.08-2013.06		Centre	Pickup 4WD WLAA		Center Bearing Support	539070
	2006.08-2013.06		Centre	Pickup RWD WLAA	Long Wheelbase	Center Bearing Support	539070
	2006.08-2013.06		Centre	Pickup 4WD WLAA		Center Bearing Support Kit	538696S
	2006.08-2013.06		Centre	Pickup RWD WLAA		Center Bearing Support Kit	538696S
	2006.12-		Centre	Platform/Chassis RWD WLAT (16 V)	Long Wheelbase	Center Bearing Support	539070
2.6 (90 kw)	2006.10-2011.11	AT/MT	Rear	Pickup 4WD G6Y1		Propshaft	PS900583
2.6 (92 kw)	2006.10-2015.12	AT/MT	Rear	Pickup 4WD G6Y1		Propshaft	PS900583
2.6 (94 kw)	2006.10-2011.11	AT/MT	Rear	Pickup 4WD G6Y1		Propshaft	PS900583
2.6 (115 kw)	2006.10-2015.12	AT/MT	Rear	Pickup 4WD G6Y1		Propshaft	PS900583
3.0 (115 kw)	2006.10-2013.06	AT/MT	Rear	Pickup 4WD WEA1		Propshaft	PS900583
	2006.10-2013.06		Centre	Pickup 4WD WEA1		Center Bearing Support	539070
	2006.12-		Centre	Platform/Chassis 4WD WEAT		Center Bearing Support	539070
3.2 (147 kw)	2011.11-	6MT/6AT	Front	Pickup 4WD P5-AT		Propshaft	PS901357
	2011.11-	6MT	Rear	Pickup RWD P5-AT		Propshaft	PS901341
	2011.11-	6MT	Rear	Platform/Chassis RWD P5-AT		Propshaft	PS901341
	2011.11-	AT/MT	Rear	Pickup 4WD P5-AT		Propshaft	PS901342
CX7							
2.3 (175 kw)	2006.06-2014.12		Front	SUV 4WD L3K7/L3Y7		Center Bearing Support	539058
	2006.06-2014.12		Rear	SUV 4WD L3K7/L3Y7		Center Bearing Support	539059
2.3 (177 kw)	2006.06-2009.06		Front	SUV FWD L3K7		Center Bearing Support	539058
	2006.06-2009.06		Rear	SUV FWD L3K7		Center Bearing Support	539059
2.3 (182 kw)	2006.06-2012.12		Front	SUV FWD L3-VDT		Center Bearing Support	539058
	2006.06-2012.12		Rear	SUV FWD L3-VDT		Center Bearing Support	539059
	2007.01-2012.12		Front	SUV 4WD L3Y6		Center Bearing Support	539058
	2007.01-2012.12		Rear	SUV 4WD L3Y6		Center Bearing Support	539059
2.3 (190 kw)	2007.10-2009.08		Front	SUV 4WD L3K4		Center Bearing Support	539058
	2007.10-2009.08		Rear	SUV 4WD L3K4		Center Bearing Support	539059
2.3 (191 kw)	2007.01-2013.03	MT	Rear	SUV 4WD L3Y6/L3Y7/L3ZA		Propshaft	PS901668
	2007.01-2013.03		Front	SUV 4WD L3Y6/L3Y7/L3ZA		Center Bearing Support	539058
	2007.01-2013.03		Rear	SUV 4WD L3Y6/L3Y7/L3ZA		Center Bearing Support	539059
2.5 (120 kw)	2009.07-2013.03		Front	SUV FWD L5Y7		Center Bearing Support	539058
	2009.07-2013.03		Rear	SUV FWD L5Y7		Center Bearing Support	539059
CX9							
3.5 (193 kw)	2007.01-	AT	Rear	SUV 4WD CYC4		Propshaft	PS901667
	2007.01-		Front	SUV 4WD CYC4		Center Bearing Support	539048
	2007.01-		Rear	SUV 4WD CYC4		Center Bearing Support	539047
	2007.01-2007.12		Front	SUV FWD CYC4		Center Bearing Support	539048
	2007.01-2007.12		Rear	SUV FWD CYC4		Center Bearing Support	539047
3.7 (204 kw)	2007.01-	AT	Rear	SUV 4WD CAY1/CAY5/CAY6		Propshaft	PS901667
	2007.01-		Front	SUV 4WD CAY1/CAY5/CAY6		Center Bearing Support	539048
	2007.01-		Rear	SUV 4WD CAY1/CAY5/CAY6		Center Bearing Support	539047
	2008.01-		Front	SUV FWD CAY1/CAY5/CAY6		Center Bearing Support	539048
	2008.01-		Rear	SUV FWD CAY1/CAY5/CAY6		Center Bearing Support	539047
Drifter							
2.5 (61 kw)	2002.08-2006.07		-	Pickup 4WD WLE7		Center Bearing Support	539057
Miata							
1.6 (78 kw)	1989.09-1993.12	MT	Rear	Convertible RWD B6ZE	Model year from:1990	Propshaft	PS900342
1.8 (104 kw)	1998.01-2000.12	MT	Rear	Convertible RWD BPD	Model year from:1999	Propshaft	PS900612
MX5							
1.6 (85 kw)	1989.10-1994.01	MT	Rear	Cabriolet RWD B6GP	Model year to:1993	Propshaft	PS900342
1.6 (86 kw)	1990.01-1993.12	MT	Rear	Convertible RWD B6ZE		Propshaft	PS900342
1.8 (96 kw)	1993.01-1998.04	MT	Rear	Convertible RWD BP (DOHC), BP-ZE, BPF1	Model year from:1994	Propshaft	PS900612
	1993.09-1997.12	MT	Rear	Convertible RWD BPF1	Model year from:1994	Propshaft	PS900612
1.8 (103 kw)	1998.01-2005.10	AT	Rear	Cabriolet RWD BP5A/BP6J	Model year from:1999	Propshaft	PS900629
	1998.01-2005.10	MT	Rear	Cabriolet RWD BP5A/BP6J	Model year from:1999	Propshaft	PS900612
1.8 (107 kw)	2000.08-2005.10	AT	Rear	Cabriolet RWD BP6J		Propshaft	PS900629
	2000.08-2005.10	MT	Rear	Cabriolet RWD BP6J		Propshaft	PS900612

	YEAR	TRANSM.	FITTING POSITION	BODY STYLE & DRIVE TYPE & ENGINE	REMARKS	PRODUCT	GSP Ref.
MAZDA							
Proceed							
2.5 (61 kw)	2002.08-2006.07		-	Pickup 4WD WLE7		Center Bearing Support	539057
MERCEDES-BENZ							
1015, 1015 L							
4.249 (112 kw)	2004.10-		Front;Rear	Platform/Chassis 4x2 OM 904.922		Center Bearing Support	538660
1016, 1016 L							
4.249 (115 kw)	2004.10-		Front;Rear	Platform/Chassis 4x2 OM 900.912, OM 900.918		Center Bearing Support	538660
4.801 (115 kw)	2004.10-		Front;Rear	Platform/Chassis 4x2 OM 924.935		Center Bearing Support	538660
5.132 (115 kw)	2013.04-		Front;Rear	Platform/Chassis 4x2 OM 934.911		Center Bearing Support	538660
1017, 1017 L							
4.249 (125 kw)	1998.01-2004.10		Front;Rear	Platform/Chassis 4x2 OM 904.911, OM 904.917		Center Bearing Support	538660
1018, 1018 L							
4.249 (130 kw)	2004.10-		Front;Rear	Platform/Chassis 4x2 OM 900.913, OM 900.919		Center Bearing Support	538660
5.132 (130 kw)	2013.04-		Front;Rear	Platform/Chassis 4x2 OM 934.911		Center Bearing Support	538660
1021, 1021 L							
5.132 (155 kw)	2013.04-		Front;Rear	Platform/Chassis 4x2 OM 934.913		Center Bearing Support	538660
1022, 1022 L							
4.801 (160 kw)	2004.10-		Front;Rear	Platform/Chassis 4x2 OM 924.920 (10.04-.), OM 924.922, OM 924.930		Center Bearing Support	538660
1023, 1023 L							
5.132 (170 kw)	2013.04-		Front;Rear	Platform/Chassis 4x2 OM 934.913		Center Bearing Support	538660
6.374 (170 kw)	1998.01-2004.10		Front;Rear	Platform/Chassis 4x2 OM 906.910 (01.98-.)		Center Bearing Support	538660
1023, 1023 L, 1024, 1024 L							
6.374 (170-175 kw)	2004.10-		Front;Rear	Platform/Chassis 4x2 OM 902.916 (10.04-.), OM 906.910 (10.04-.), OM 906.915 (10.04-.)		Center Bearing Support	538660
1024, 1024 L							
7.201 (175 kw)	2004.10-		Front;Rear	Platform/Chassis 4x2 OM 925.920		Center Bearing Support	538660
7.698 (175 kw)	2013.04-		Front;Rear	Platform/Chassis 4x2 OM 936.910		Center Bearing Support	538660
1214, 1214 L							
4.249 (100 kw)	1998.01-2004.10		Front;Rear	Platform/Chassis 4x2 OM 904.910, OM 904.916		Center Bearing Support	538660
1215, 1215 L							
4.249 (112 kw)	1998.01-2004.10		Front;Rear	Platform/Chassis 4x2 OM 904.922		Center Bearing Support	538660
1215, 1215 L, 1216, 1216 L							
4.249 (112-115 kw)	2004.10-		Front;Rear	Platform/Chassis 4x2 OM 900.912, OM 904.922		Center Bearing Support	538660
1216, 1216 L							
4.801 (115 kw)	2004.10-		Front;Rear	Platform/Chassis 4x2 OM 924.935		Center Bearing Support	538660
5.132 (115 kw)	2013.04-		Front;Rear	Platform/Chassis 4x2 OM 934.911		Center Bearing Support	538660
1217, 1217 L							
4.249 (125 kw)	1998.01-2004.10		Front;Rear	Platform/Chassis 4x2 OM 904.911, OM 904.917		Center Bearing Support	538660
1218, 1218 L							
4.249 (130 kw)	2004.10-		Front;Rear	Platform/Chassis 4x2 OM 900.913		Center Bearing Support	538660
5.132 (130 kw)	2013.04-		Front;Rear	Platform/Chassis 4x2 OM 934.911		Center Bearing Support	538660
1221, 1221 L							
5.132 (155 kw)	2013.04-		Front;Rear	Platform/Chassis 4x2 OM 934.913		Center Bearing Support	538660
1222, 1222 L							
4.801 (160 kw)	2004.10-		Front;Rear	Platform/Chassis 4x2 OM 924.920 (10.04-.), OM 924.922, OM 924.930		Center Bearing Support	538660
1223, 1223 L							
5.132 (170 kw)	2013.04-		Front;Rear	Platform/Chassis 4x2 OM 934.913		Center Bearing Support	538660
6.374 (170 kw)	1998.01-2004.10		Front;Rear	Platform/Chassis 4x2 OM 906.910 (01.98-.), OM 906.915 (01.98-.)		Center Bearing Support	538660
1223, 1223 L, 1224, 1224 L							
6.374 (170-175 kw)	2004.10-		Front;Rear	Platform/Chassis 4x2 OM 902.916 (10.04-.), OM 906.910 (10.04-.), OM 906.915 (10.04-.)		Center Bearing Support	538660
1224, 1224 L							
7.201 (175 kw)	2004.10-		Front;Rear	Platform/Chassis 4x2 OM 925.920		Center Bearing Support	538660
7.698 (175 kw)	2013.04-		Front;Rear	Platform/Chassis 4x2 OM 936.910		Center Bearing Support	538660
1226, 1226 L							
6.374 (188 kw)	2004.10-		Front;Rear	Platform/Chassis 4x2 OM 902.917 (10.04-.)		Center Bearing Support	538660
7.201 (188 kw)	2004.10-2014.12		Front;Rear	Platform/Chassis 4x2 OM 925.920		Center Bearing Support	538660
1228, 1228 L							
6.374 (205 kw)	1998.01-2004.10		Front;Rear	Platform/Chassis 4x2 OM 906.911 (01.98-.), OM 906.916 (01.98-.)		Center Bearing Support	538660
1228, 1228 L, 1229, 1229 L							
6.374 (205-210 kw)	2004.10-		Front;Rear	Platform/Chassis 4x2 OM 902.918 (10.04-.), OM 906.911 (10.04-.), OM 906.916 (10.04-.)		Center Bearing Support	538660
1229, 1229 L							
7.201 (210 kw)	2004.10-		Front;Rear	Platform/Chassis 4x2 OM 925.920		Center Bearing Support	538660
200G							
2.0 (80 kw)	1982.07-1989.08	AT	Rear	Terrain cab wagon closed 4WD 102964	Modelcode:460236	Propshaft	PS901827

	YEAR	TRANSM.	FITTING POSITION	BODY STYLE & DRIVE TYPE & ENGINE	REMARKS	PRODUCT	GSP Ref.
MERCEDES-BENZ							
200GE							
2.0 (85 kw)	1989.09-1993.07	4AT	Rear	Terrain cab wagon closed 4WD 102965	For Modelcode:463221	Propshaft	PS901881
	1989.09-1993.07	AT	Rear	Terrain cab wagon closed 4WD 102965	Modelcode:463220	Propshaft	PS901822
	1990.01-1993.07	AT	Rear	Open Off-Road Vehicle 4WD M 102.965		Propshaft	PS901822
208D							
2.3 (58 kw)	1988.10-1996.02		Centre	Bus RWD OM 601.940 (10.88-06.95)		Center Bearing Support	539009
	1988.10-1996.02		Centre	Bus RWD OM 601.940 (10.88-06.95)		Center Bearing Support Kit	538978S
	1988.11-1996.02		Centre	Platform/Chassis RWD OM 601.940 (11.88-06.95)	Installation size:194mm	Center Bearing Support	539009
	1988.11-1996.02		Centre	Van RWD OM 601.940 (11.88-06.95)		Center Bearing Support	539009
	1988.11-1996.02		Centre	Platform/Chassis RWD OM 601.940 (11.88-06.95)	Installation size:195.5mm	Center Bearing Support	539062
	1988.11-1996.02		Centre	Platform/Chassis RWD OM 601.940 (11.88-06.95)		Center Bearing Support Kit	538978S
	1988.11-1996.02		Centre	Van RWD OM 601.940 (11.88-06.95)		Center Bearing Support Kit	538978S
2.3 (60 kw)	1988.10-1996.02		Centre	Bus RWD OM 601.940 (10.88-06.95)		Center Bearing Support	539009
	1988.10-1996.02		Centre	Van RWD OM 601.940 (10.88-06.95)		Center Bearing Support	539009
	1988.10-1996.02		Centre	Bus RWD OM 601.940 (10.88-06.95)		Center Bearing Support Kit	538978S
	1988.10-1996.02		Centre	Van RWD OM 601.940 (10.88-06.95)		Center Bearing Support Kit	538978S
	1989.06-1996.02		Centre	Platform/Chassis RWD OM 601.940 (06.89-06.95)		Center Bearing Support	539009
	1989.06-1996.02		Centre	Platform/Chassis RWD OM 601.940 (06.89-06.95)		Center Bearing Support Kit	538978S
210							
2.3 (70 kw)	1982.07-1996.02		Centre	Van RWD M 102.942 (07.82-12.88), M 102.946		Center Bearing Support	539009
	1982.07-1996.02		Centre	Van RWD M 102.942 (07.82-12.88), M 102.946		Center Bearing Support Kit	538978S
2.3 (77 kw)	1989.05-1996.02		Centre	Bus RWD M 102.945 (05.89-.)		Center Bearing Support	539009
	1989.05-1996.02		Centre	Van RWD M 102.945 (05.89-.)		Center Bearing Support	539009
	1989.05-1996.02		Centre	Bus RWD M 102.945 (05.89-.)		Center Bearing Support Kit	538978S
	1989.05-1996.02		Centre	Van RWD M 102.945 (05.89-.)		Center Bearing Support Kit	538978S
210D							
2.8 (70 kw)	1988.10-1996.02		Centre	Van RWD OM 602.940		Center Bearing Support	539009
	1988.10-1996.02		Centre	Van RWD OM 602.940		Center Bearing Support Kit	538978S
	1988.11-1996.02		Centre	Bus RWD OM 602.940		Center Bearing Support	539009
	1988.11-1996.02		Centre	Bus RWD OM 602.940		Center Bearing Support Kit	538978S
2.8 (72 kw)	1988.10-1996.02		Centre	Van RWD OM 602.940		Center Bearing Support	539009
	1988.11-1996.02		Centre	Bus RWD OM 602.940		Center Bearing Support	539009
	1988.11-1996.02		Centre	Platform/Chassis RWD OM 602.940		Center Bearing Support	539009
	1988.11-1996.02		Centre	Bus RWD OM 602.940		Center Bearing Support Kit	538978S
	1988.11-1996.02		Centre	Platform/Chassis RWD OM 602.940		Center Bearing Support Kit	538978S
2.9 (70 kw)	1988.11-1996.02		Centre	Platform/Chassis RWD OM 602.940		Center Bearing Support	539009
	1988.11-1996.02		Centre	Platform/Chassis RWD OM 602.940		Center Bearing Support Kit	538978S
230G							
2.3 (66 kw)	1980.02-1993.07	AT	Rear	Terrain cab wagon closed 4WD 115973	Modelcode:460230	Propshaft	PS901827
2.3 (75 kw)	1980.02-1987.07	AT	Rear	Terrain cab wagon closed 4WD 115973		Propshaft	PS901827
230GE							
2.3 (90 kw)	1989.09-1996.07	AT	Rear	Terrain cab wagon closed 4WD 102979/102998	Modelcode:461238/461218	Propshaft	PS901827
2.3 (92 kw)	1989.09-2000.07	AT	Rear	Terrain cab wagon closed 4WD 102979/102981/102996	Modelcode:461238/461218	Propshaft	PS901827
2.3 (93 kw)	1990.06-1993.02	AT	Rear	Terrain cab open 4WD 102989		Propshaft	PS901822
	1990.06-1993.06	4AT	Rear	Terrain cab wagon closed 4WD 102989	For Modelcode:463225	Propshaft	PS901881
	1990.06-1993.06	AT	Rear	Terrain cab wagon closed 4WD 102989	Modelcode:463224	Propshaft	PS901822
240GD							
2.4 (53 kw)	1979.03-1987.08	AT	Rear	Terrain cab wagon closed 4WD 616936/616938	Modelcode:460330	Propshaft	PS901827
250GD							
2.5 (68 kw)	1990.02-1993.05	AT	Rear	Terrain cab wagon closed 4WD 602938	Modelcode:461450	Propshaft	PS901827
2.5 (69 kw)	1990.06-1996.07	4AT	Rear	Terrain cab wagon closed 4WD 602931	For Modelcode:463325	Propshaft	PS901881
	1990.06-1996.07	AT	Rear	Terrain cab wagon closed 4WD 602931	Modelcode:463324	Propshaft	PS901822
280GE							
2.8 (115 kw)	1979.11-1989.08	AT	Rear	Terrain cab wagon closed 4WD 110994	Modelcode:460232	Propshaft	PS901827
290GD							
2.9 (70 kw)	1993.06-2000.07	AT	Rear	Terrain cab wagon closed 4WD 602942/602946/602947	Modelcode:461451/461337/461367/461450	Propshaft	PS901827
2.9 (88 kw)	1997.08-2001.07	AT	Rear	Terrain cab wagon closed 4WD 602983	Modelcode:461335	Propshaft	PS901827
300							
2.8 (145 kw)	1993.01-1998.10		Front	Saloon RWD 104944		Flexible Coupling	510571
	1993.01-1998.10		Front;Rear	Saloon RWD 104944		Flexible Coupling	510579
	1993.01-1998.10		Front	Saloon RWD 104944		Flexible Coupling Kit	510571S
	1993.01-1998.10		Front	Saloon RWD 104944	Chassis no. from:A 142735;MT	Flexible Coupling Kit	510580S
300GD							
3.0 (83 kw)	1989.09-1993.08	AT	Front	Terrain cab open 4WD 603931		Propshaft	202065
	1989.09-1993.08	AT	Front	Terrain cab wagon closed 4WD 603931		Propshaft	202065

	YEAR	TRANSM.	FITTING POSITION	BODY STYLE & DRIVE TYPE & ENGINE	REMARKS	PRODUCT	GSP Ref.
MERCEDES-BENZ							
300GD							
3.0 (83 kw)	1989.09-1993.08	4AT	Rear	Terrain cab wagon closed 4WD 603931	For Modelcode:463328	Propshaft	PS901881
	1989.09-1993.08	AT	Rear	Terrain cab open 4WD 603931		Propshaft	PS901822
	1989.09-1993.08	AT	Rear	Terrain cab wagon closed 4WD 603931	Modelcode:463327	Propshaft	PS901822
300GE							
3.0 (125 kw)	1989.08-1993.08	AT	Front	Terrain cab wagon closed 4WD 103987		Propshaft	202065
	1989.08-1993.08	4AT	Rear	Terrain cab wagon closed 4WD 103987	For Modelcode:463228	Propshaft	PS901881
	1989.08-1993.08	AT	Rear	Terrain cab wagon closed 4WD 103987	Modelcode:463227	Propshaft	PS901822
	1989.09-1997.09	AT	Rear	Terrain cab open 4WD 103987		Propshaft	PS901822
3.0 (128 kw)	1990.06-1997.08	AT	Front	Terrain cab wagon closed 4WD 103987		Propshaft	202065
	1990.06-1997.08	4AT	Rear	Terrain cab wagon closed 4WD 103987		Propshaft	PS901881
308D							
2.3 (58 kw)	1988.11-1996.02		Centre	Van RWD OM 601.940 (11.88-06.95)		Center Bearing Support	539009
	1988.11-1996.02		Centre	Van RWD OM 601.940 (11.88-06.95)		Center Bearing Support Kit	538978S
	1989.06-1996.02		Centre	Platform/Chassis RWD OM 601.940 (06.89-06.95)		Center Bearing Support	539009
	1989.06-1996.02		Centre	Platform/Chassis RWD OM 601.940 (06.89-06.95)		Center Bearing Support Kit	538978S
	1990.05-1996.02		Centre	Bus RWD OM 601.940 (05.90-06.95)		Center Bearing Support	539009
	1990.05-1996.02		Centre	Bus RWD OM 601.940 (05.90-06.95)		Center Bearing Support Kit	538978S
2.3 (60 kw)	1989.06-1996.02		Centre	Bus RWD OM 601.940 (06.89-06.95)		Center Bearing Support	539009
	1989.06-1996.02		Centre	Platform/Chassis RWD OM 601.940 (06.89-06.95)		Center Bearing Support	539009
	1989.06-1996.02		Centre	Van RWD OM 601.940 (06.89-06.95)		Center Bearing Support	539009
	1989.06-1996.02		Centre	Bus RWD OM 601.940 (06.89-06.95)		Center Bearing Support Kit	538978S
	1989.06-1996.02		Centre	Platform/Chassis RWD OM 601.940 (06.89-06.95)		Center Bearing Support Kit	538978S
	1989.06-1996.02		Centre	Van RWD OM 601.940 (06.89-06.95)		Center Bearing Support Kit	538978S
310D							
2.9 (70 kw)	1989.06-1996.02		Centre	Bus RWD OM 602.940		Center Bearing Support	539009
	1989.06-1996.02		Centre	Platform/Chassis RWD OM 602.940		Center Bearing Support	539009
	1989.06-1996.02		Centre	Van RWD OM 602.940		Center Bearing Support	539009
	1989.06-1996.02		Centre	Bus RWD OM 602.940		Center Bearing Support Kit	538978S
	1989.06-1996.02		Centre	Platform/Chassis RWD OM 602.940		Center Bearing Support Kit	538978S
	1989.06-1996.02		Centre	Van RWD OM 602.940		Center Bearing Support Kit	538978S
2.9 (72 kw)	1989.06-1996.02		Centre	Platform/Chassis RWD OM 602.940		Center Bearing Support	539009
	1989.06-1996.02		Centre	Van RWD OM 602.940		Center Bearing Support	539009
	1989.06-1996.02		Centre	Platform/Chassis RWD OM 602.940		Center Bearing Support Kit	538978S
	1989.06-1996.02		Centre	Van RWD OM 602.940		Center Bearing Support Kit	538978S
	1990.06-1996.02		Centre	Bus RWD OM 602.940		Center Bearing Support	539009
	1990.06-1996.02		Centre	Bus RWD OM 602.940		Center Bearing Support Kit	538978S
350							
3.5 (225 kw)	2015.11-2018.10		Front;Rear	SUV 4WD M 276.955		Flexible Coupling Kit	512673S
350GD							
3.4 (100 kw)	1991.09-1996.08	AT	Front	Terrain cab wagon closed 4WD 603972		Propshaft	202067
	1991.09-1996.08	AT	Rear	Terrain cab wagon closed 4WD 603972	Modelcode:463320	Propshaft	PS901822
	1991.09-1997.09	AT	Rear	Terrain cab open 4WD 603972		Propshaft	PS901822
408D							
2.3 (58 kw)	1988.11-1995.06		Centre	Platform/Chassis RWD OM 601.940		Center Bearing Support Kit	538978S
	1988.11-1995.06		Centre	Van RWD OM 601.940		Center Bearing Support Kit	538978S
2.3 (60 kw)	1988.11-1995.06		Centre	Platform/Chassis RWD OM 601.940		Center Bearing Support Kit	538978S
	1988.11-1995.06		Centre	Van RWD OM 601.940		Center Bearing Support Kit	538978S
410							
2.3 (70 kw)	1982.08-1995.06		Centre	Platform/Chassis RWD M 102.942		Center Bearing Support Kit	538978S
	1982.08-1995.06		Centre	Van RWD M 102.942		Center Bearing Support Kit	538978S
2.3 (77 kw)	1982.08-1995.06		Centre	Platform/Chassis RWD M 102.945 (01.89-.)		Center Bearing Support Kit	538978S
	1982.08-1995.06		Centre	Van RWD M 102.945 (01.89-.)		Center Bearing Support Kit	538978S
410D							
2.8 (70 kw)	1988.11-1995.06		Centre	Platform/Chassis RWD OM 602.940		Center Bearing Support Kit	538978S
	1988.11-1995.06		Centre	Van RWD OM 602.940		Center Bearing Support Kit	538978S
2.8 (72 kw)	1988.11-1995.06		Centre	Platform/Chassis RWD OM 602.940		Center Bearing Support Kit	538978S
	1988.11-1995.06		Centre	Van RWD OM 602.940		Center Bearing Support Kit	538978S
500GE							
5.0 (177 kw)	1993.09-1994.12	4AT	Rear	Terrain cab wagon closed 4WD 117965		Propshaft	PS901881
512D Vario							
2.9 (90 kw)	1996.09-2010.12		Front;Rear	Platform/Chassis RWD OM 602.984 (09.96-.)		Center Bearing Support	538660
	1996.09-2010.12		Front;Rear	Van RWD OM 602.984 (09.96-.)		Center Bearing Support	538660

	YEAR	TRANSM.	FITTING POSITION	BODY STYLE & DRIVE TYPE & ENGINE	REMARKS	PRODUCT	GSP Ref.
MERCEDES-BENZ							
712							
4.249 (90 kw)	1998.01-2004.10		Front;Rear	Platform/Chassis 4x2 OM 904.909		Center Bearing Support	538660
712, 713							
4.249 (90-95 kw)	2004.10-		Front;Rear	Platform/Chassis 4x2 OM 900.911, OM 900.917 (02.06-.), OM 904.909, OM 904.915		Center Bearing Support	538660
714, 714 L							
4.249 (100 kw)	1998.01-2004.10		Front;Rear	Platform/Chassis 4x2 OM 904.910, OM 904.916		Center Bearing Support	538660
715, 715 L, 716, 716 L							
4.249 (112-115 kw)	2004.10-		Front;Rear	Platform/Chassis 4x2 OM 900.912 (02.06-.), OM 900.918 (02.06-.), OM 904.922		Center Bearing Support	538660
715,715 L							
4.249 (112 kw)	1998.01-2004.10		Front;Rear	Platform/Chassis 4x2 OM 904.922		Center Bearing Support	538660
716, 716 L							
5.132 (115 kw)	2013.04-		Front;Rear	Platform/Chassis 4x2 OM 934.911		Center Bearing Support	538660
717, 717 L							
4.249 (125 kw)	1998.01-2004.10		Front;Rear	Platform/Chassis 4x2 OM 904.911, OM 904.917		Center Bearing Support	538660
718, 718 L							
5.132 (130 kw)	2013.04-		Front;Rear	Platform/Chassis 4x2 OM 934.911		Center Bearing Support	538660
721, 721 L							
5.132 (155 kw)	2013.04-		Front;Rear	Platform/Chassis 4x2 OM 934.913		Center Bearing Support	538660
723, 723 L							
5.132 (170 kw)	2013.04-		Front;Rear	Platform/Chassis 4x2 OM 934.913		Center Bearing Support	538660
810DT Vario							
4.3 (75 kw)	1996.09-2006.06		Front;Rear	Cab with engine RWD OM 904.904		Center Bearing Support	538660
812							
4.249 (90 kw)	1998.01-2004.10		Front;Rear	Platform/Chassis 4x2 OM 904.909		Center Bearing Support	538660
812, 813							
4.249 (90-95 kw)	2004.10-		Front;Rear	Platform/Chassis 4x2 OM 900.911 (02.06-.), OM 900.917 (02.06-.), OM 904.909		Center Bearing Support	538660
812D Vario							
2.9 (90 kw)	1996.09-2010.12		Front;Rear	Platform/Chassis RWD OM 602.984 (09.96-.), OM 602.985 (09.96-.)		Center Bearing Support	538660
	1996.09-2010.12		Front;Rear	Van RWD OM 602.984 (09.96-.), OM 602.985 (09.96-.)		Center Bearing Support	538660
813D/814D Vario							
4.2 (100 kw)	1996.09-2013.12		Front;Rear	Platform/Chassis RWD OM 904.908		Center Bearing Support	538660
813DA/814DA Vario							
4.2 (100 kw)	1996.09-2013.12		Front;Rear	Platform/Chassis 4WD OM 904.908		Center Bearing Support	538660
814, 814 L							
4.249 (100 kw)	1998.01-2004.10		Front;Rear	Platform/Chassis 4x2 OM 904.910, OM 904.916, OM 904.930		Center Bearing Support	538660
814D Vario							
4.2 (100 kw)	1996.09-2013.12		Front;Rear	Van RWD OM 904.908		Center Bearing Support	538660
814DA Vario							
4.2 (100 kw)	1996.09-2013.12		Front;Rear	Van 4WD OM 904.908		Center Bearing Support	538660
815, 815 L							
4.249 (112 kw)	1998.01-2004.10		Front;Rear	Platform/Chassis 4x2 OM 904.922		Center Bearing Support	538660
815, 815 L, 816, 816 L							
4.249 (112-115 kw)	2004.10-		Front;Rear	Platform/Chassis 4x2 OM 900.912 (02.06-.), OM 900.918 (02.06-.), OM 904.922		Center Bearing Support	538660
815,815 L							
4.249 (112 kw)	1998.01-2004.10		Front;Rear	Platform/Chassis 4x2 OM 904.922		Center Bearing Support	538660
815D Vario							
4.3 (110 kw)	1996.09-2013.12		Front;Rear	Platform/Chassis RWD OM 904.936		Center Bearing Support	538660
4.3 (112 kw)	1996.09-2010.12		Front;Rear	Van RWD OM 904.923		Center Bearing Support	538660
815D/816D Vario							
4.3 (112 kw)	1996.09-		Front;Rear	Platform/Chassis RWD OM 904.923		Center Bearing Support	538660
	1996.09-2010.12		Front;Rear	Platform/Chassis RWD OM 904.923		Center Bearing Support	538660
4.3 (115 kw)	1996.09-2013.12		Front;Rear	Platform/Chassis RWD OM 900.918, OM 904.923		Center Bearing Support	538660
815DA Vario							
4.3 (112 kw)	1996.09-2010.12		Front;Rear	Van 4WD OM 904.923		Center Bearing Support	538660
815DA/816DA Vario							
4.3 (112 kw)	1996.09-2010.12		Front;Rear	Platform/Chassis 4WD OM 904.923		Center Bearing Support	538660
816, 816 L							
4.249 (115 kw)	2004.10-		Front;Rear	Platform/Chassis 4x2 OM 900.912		Center Bearing Support	538660
4.801 (115 kw)	2004.10-		Front;Rear	Platform/Chassis 4x2 OM 924.935		Center Bearing Support	538660
5.132 (115 kw)	2013.04-		Front;Rear	Platform/Chassis 4x2 OM 934.911		Center Bearing Support	538660
816D Vario							
4.3 (115 kw)	1996.09-2013.12		Front;Rear	Van RWD OM 900.918, OM 904.923		Center Bearing Support	538660
817, 817 L							
4.249 (125 kw)	1998.01-2004.10		Front;Rear	Platform/Chassis 4x2 OM 904.911, OM 904.917		Center Bearing Support	538660

	YEAR	TRANSM.	FITTING POSITION	BODY STYLE & DRIVE TYPE & ENGINE	REMARKS	PRODUCT	GSP Ref.
MERCEDES-BENZ							
818, 818 L							
4.249 (130 kw)	2004.10-		Front;Rear	Platform/Chassis 4x2 OM 900.913 (02.06-.), OM 900.919 (02.06-.)		Center Bearing Support	538660
5.132 (130 kw)	2013.04-		Front;Rear	Platform/Chassis 4x2 OM 934.911		Center Bearing Support	538660
818D Vario							
4.2 (130 kw)	2006.09-		Front;Rear	Platform/Chassis RWD OM 900.919, OM 904.964		Center Bearing Support	538660
821, 821 L							
5.132 (155 kw)	2013.04-		Front;Rear	Platform/Chassis 4x2 OM 934.913		Center Bearing Support	538660
822, 822 L							
4.801 (160 kw)	2004.10-		Front;Rear	Platform/Chassis 4x2 OM 924.920 (10.04-.), OM 924.922, OM 924.930		Center Bearing Support	538660
823, 823 L							
5.132 (170 kw)	2013.04-		Front;Rear	Platform/Chassis 4x2 OM 934.913		Center Bearing Support	538660
6.374 (170 kw)	1998.01-2004.10		Front;Rear	Platform/Chassis 4x2 OM 906.910 (01.98-.), OM 906.915 (01.98-.)		Center Bearing Support	538660
823, 823 L, 824, 824 L							
6.374 (170-175 kw)	2004.10-		Front;Rear	Platform/Chassis 4x2 OM 902.916 (10.04-.), OM 906.910 (10.04-.), OM 906.915 (10.04-.)		Center Bearing Support	538660
824, 824 L							
7.201 (175 kw)	2004.10-		Front;Rear	Platform/Chassis 4x2 OM 925.920		Center Bearing Support	538660
7.698 (175 kw)	2013.04-		Front;Rear	Platform/Chassis 4x2 OM 936.910		Center Bearing Support	538660
915, 915 L, 916, 916 L							
4.249 (112-115 kw)	2004.10-		Front;Rear	Platform/Chassis 4x2 OM 900.912 (02.06-.), OM 900.918 (02.06-.), OM 904.922		Center Bearing Support	538660
916, 916 L							
4.801 (115 kw)	2004.10-		Front;Rear	Platform/Chassis 4x2 OM 924.935		Center Bearing Support	538660
5.132 (115 kw)	2013.04-		Front;Rear	Platform/Chassis 4x2 OM 934.911		Center Bearing Support	538660
917, 917 L							
4.249 (125 kw)	1998.01-2004.10		Front;Rear	Platform/Chassis 4x2 OM 904.911, OM 904.917		Center Bearing Support	538660
918, 918 L							
4.249 (130 kw)	2004.10-		Front;Rear	Platform/Chassis 4x2 OM 900.913, OM 900.919 (02.06-.)		Center Bearing Support	538660
5.132 (130 kw)	2013.04-		Front;Rear	Platform/Chassis 4x2 OM 934.911		Center Bearing Support	538660
921, 921 L							
5.132 (155 kw)	2013.04-		Front;Rear	Platform/Chassis 4x2 OM 934.913		Center Bearing Support	538660
922, 922 L							
4.801 (160 kw)	2004.10-		Front;Rear	Platform/Chassis 4x2 OM 924.920 (10.04-.), OM 924.922, OM 924.930		Center Bearing Support	538660
923, 923 L							
5.132 (170 kw)	2013.04-		Front;Rear	Platform/Chassis 4x2 OM 934.913		Center Bearing Support	538660
6.374 (170 kw)	1998.01-2004.10		Front;Rear	Platform/Chassis 4x2 OM 906.910 (01.98-.)		Center Bearing Support	538660
923, 923 L, 924, 924 L							
6.374 (170-175 kw)	2004.10-		Front;Rear	Platform/Chassis 4x2 OM 902.916 (10.04-.), OM 906.910 (10.04-.), OM 906.915 (10.04-.)		Center Bearing Support	538660
924, 924 L							
7.201 (175 kw)	2004.10-		Front;Rear	Platform/Chassis 4x2 OM 925.920		Center Bearing Support	538660
7.698 (175 kw)	2013.04-		Front;Rear	Platform/Chassis 4x2 OM 936.910		Center Bearing Support	538660
A160							
1.5 (66 kw)	2013.06-2018.05		Front	Hatchback FWD 607951		Flexible Coupling Kit	537796S
1.6 (75 kw)	2015.07-2018.05		Front	Hatchback FWD 270910		Flexible Coupling Kit	537796S
A180							
1.5 (80 kw)	2012.06-2018.05		Front	Hatchback FWD 607951		Flexible Coupling Kit	537796S
1.6 (90 kw)	2012.09-2018.05		Front	Hatchback FWD 270910		Flexible Coupling Kit	537796S
1.8 (80 kw)	2012.06-2014.10		Front	Hatchback FWD 651901		Flexible Coupling Kit	537796S
A200							
1.3 (120 kw)	2020.10-	DCT	Rear	Saloon 4WD 282914		Propshaft	PS901952
	2020.10-	DCT	Rear	Hatchback 4WD 282914		Propshaft	PS901952
1.6 (115 kw)	2012.06-2018.05		Front	Hatchback FWD 270910		Flexible Coupling Kit	537796S
	2015.06-2018.05		Front	Hatchback FWD M 270.910		Flexible Coupling Kit	537796S
1.8 (100 kw)	2012.06-2014.10		Front	Hatchback FWD 651901		Flexible Coupling Kit	537796S
2.0 (110 kw)	2019.10-	DCT	Rear	Hatchback 4WD 654920		Propshaft	PS901952
	2019.10-	DCT	Rear	Saloon 4WD 654920		Propshaft	PS901952
2.2 (100 kw)	2014.02-2018.05		Centre	Hatchback 4WD 651930		Center Bearing Support	538648
	2014.02-2018.05		Rear	Hatchback 4WD 651930		Flexible Coupling	537818
	2014.02-2018.05		Front	Hatchback 4WD 651930		Flexible Coupling Kit	537796S
	2014.02-2018.05		Front	Hatchback FWD 651930		Flexible Coupling Kit	537796S
A220							
2.0 (135 kw)	2014.05-2018.05		Rear	Hatchback 4WD 270920		Flexible Coupling	537818
	2014.05-2018.05		Front	Hatchback 4WD 270920		Flexible Coupling Kit	537796S
2.0 (140 kw)	2018.07-	DCT	Rear	Hatchback 4WD 260920		Propshaft	PS901952
	2018.09-	DCT	Rear	Saloon 4WD 260920		Propshaft	PS901952
	2019.10-	DCT	Rear	Hatchback 4WD 654920		Propshaft	PS901952
	2019.10-	DCT	Rear	Saloon 4WD 654920		Propshaft	PS901952

	YEAR	TRANSM.	FITTING POSITION	BODY STYLE & DRIVE TYPE & ENGINE	REMARKS	PRODUCT	GSP Ref.
MERCEDES-BENZ							
A220							
2.2 (120 kw)	2014.01-2018.05		Front	Hatchback FWD 651930		Flexible Coupling Kit	537796S
2.2 (125 kw)	2012.06-2018.05		Centre	Hatchback FWD 651930		Center Bearing Support	538648
	2012.06-2018.05		Front	Hatchback FWD 651930		Flexible Coupling Kit	537796S
	2014.02-2018.05		Centre	Hatchback 4WD 651930		Center Bearing Support	538648
	2014.02-2018.05		Rear	Hatchback 4WD 651930		Flexible Coupling	537818
	2014.02-2018.05		Front	Hatchback 4WD 651930		Flexible Coupling Kit	537796S
2.2 (130 kw)	2015.07-2018.05		Centre	Hatchback 4WD 651930		Center Bearing Support	538648
	2015.07-2018.05		Centre	Hatchback FWD 651930		Center Bearing Support	538648
	2015.07-2018.05		Rear	Hatchback 4WD 651930		Flexible Coupling	537818
	2015.07-2018.05		Front	Hatchback 4WD 651930		Flexible Coupling Kit	537796S
	2015.07-2018.05		Front	Hatchback FWD 651930		Flexible Coupling Kit	537796S
A250							
2.0 (155 kw)	2012.06-2018.05		Front	Hatchback FWD 270920		Flexible Coupling Kit	537796S
	2013.06-2018.05		Centre	Hatchback 4WD 270920		Center Bearing Support	538648
	2013.06-2018.05		Rear	Hatchback 4WD 270920		Flexible Coupling	537818
	2013.06-2018.05		Front	Hatchback 4WD 270920		Flexible Coupling Kit	537796S
2.0 (160 kw)	2015.07-2018.05		Centre	Hatchback FWD 270920		Center Bearing Support	538648
	2015.07-2018.05		Centre	Hatchback 4WD 270920		Center Bearing Support	538648
	2015.07-2018.05		Rear	Hatchback 4WD 270920		Flexible Coupling	537818
	2015.07-2018.05		Front	Hatchback FWD 270920		Flexible Coupling Kit	537796S
	2015.07-2018.05		Front	Hatchback 4WD 270920		Flexible Coupling Kit	537796S
2.0 (165 kw)	2018.07-	DCT	Rear	Hatchback 4WD 260920		Propshaft	PS901952
	2018.09-	DCT	Rear	Saloon 4WD 260920		Propshaft	PS901952
A35 AMG							
2.0 (225 kw)	2018.09-	DCT	Rear	Hatchback 4WD 260920		Propshaft	PS901952
	2019.03-	DCT	Rear	Saloon 4WD 260920		Propshaft	PS901952
A45 AMG							
2.0 (265 kw)	2013.04-2018.05		Rear	Hatchback 4WD 133980		Flexible Coupling	537818
	2013.04-2018.05		Front	Hatchback 4WD 133980		Flexible Coupling Kit	537796S
2.0 (280 kw)	2015.07-2018.05		Rear	Hatchback 4WD 133980		Flexible Coupling	537818
	2015.07-2018.05		Front	Hatchback 4WD 133980		Flexible Coupling Kit	537796S
AMG GT 43							
3.0 (270 kw)	2018.10-		Front;Rear	Coupe RWD 256930		Flexible Coupling	537851
B Electric Drive							
ET (132 kw)	2014.11-2017.10		Centre	Hatchback FWD 780990		Center Bearing Support	538648
B160							
1.5 (66 kw)	2013.05-2018.12		Centre	Hatchback FWD 607951		Center Bearing Support	538648
	2013.05-2018.12		Front	Hatchback FWD 607951		Flexible Coupling Kit	537796S
1.6 (75 kw)	2015.07-2018.12		Centre	Hatchback FWD 270910		Center Bearing Support	538648
	2015.07-2018.12		Front	Hatchback FWD 270910		Flexible Coupling Kit	537796S
B180							
1.5 (80 kw)	2013.02-2018.12		Centre	Hatchback FWD 607951		Center Bearing Support	538648
	2013.02-2018.12		Front	Hatchback FWD 607951		Flexible Coupling Kit	537796S
1.6 (90 kw)	2011.11-2018.12		Front	Hatchback FWD 270910		Flexible Coupling Kit	537796S
1.8 (80 kw)	2011.11-2014.08		Front	Hatchback FWD 651901		Flexible Coupling Kit	537796S
B200							
1.6 (115 kw)	2011.11-2018.12		Front	Hatchback FWD 270910		Flexible Coupling Kit	537796S
	2011.11-2018.12		Front	Hatchback FWD M 270.910		Flexible Coupling Kit	537796S
1.8 (100 kw)	2011.11-2014.08		Front	Hatchback FWD 651901		Flexible Coupling Kit	537796S
2.0 (115 kw)	2012.11-2017.12		Centre	Hatchback FWD 270920NGT		Center Bearing Support	538648
2.2 (100 kw)	2014.08-2018.12		Centre	Hatchback 4WD 651930		Center Bearing Support	538648
	2014.08-2018.12		Centre	Hatchback FWD 651930		Center Bearing Support	538648
	2014.08-2018.12		Rear	Hatchback 4WD 651930		Flexible Coupling	537818
	2014.08-2018.12		Front	Hatchback 4WD 651930		Flexible Coupling Kit	537796S
	2014.08-2018.12		Front	Hatchback FWD 651930		Flexible Coupling Kit	537796S
B220							
2.0 (135 kw)	2013.05-2018.12		Centre	Hatchback 4WD 270920		Center Bearing Support	538648
	2013.05-2018.12		Rear	Hatchback 4WD 270920		Flexible Coupling	537818
	2013.05-2018.12		Front	Hatchback 4WD 270920		Flexible Coupling Kit	537796S
	2014.08-2018.12		Front	Hatchback FWD M 270.920		Flexible Coupling Kit	537796S
2.2 (120 kw)	2013.06-2018.12		Front	Hatchback FWD 651930		Flexible Coupling Kit	537796S
2.2 (125 kw)	2011.11-2018.12		Centre	Hatchback FWD 651930		Center Bearing Support	538648
	2011.11-2018.12		Front	Hatchback FWD 651930		Flexible Coupling Kit	537796S
	2018.06-2018.12		Rear	Hatchback 4WD 651930		Flexible Coupling	537818

	YEAR	TRANSM.	FITTING POSITION	BODY STYLE & DRIVE TYPE & ENGINE	REMARKS	PRODUCT	GSP Ref.
MERCEDES-BENZ							
B220							
2.2 (125 kw)	2018.06-2018.12		Front	Hatchback 4WD 651930		Flexible Coupling Kit	537796S
2.2 (130 kw)	2014.08-2018.12		Centre	Hatchback 4WD 651930		Center Bearing Support	538648
	2014.08-2018.12		Centre	Hatchback FWD 651930		Center Bearing Support	538648
	2014.08-2018.12		Rear	Hatchback 4WD 651930		Flexible Coupling	537818
	2014.08-2018.12		Front	Hatchback 4WD 651930		Flexible Coupling Kit	537796S
	2014.08-2018.12		Front	Hatchback FWD 651930		Flexible Coupling Kit	537796S
B250							
2.0 (155 kw)	2012.05-2018.12		Centre	Hatchback FWD 270920		Center Bearing Support	538648
	2012.05-2018.12		Front	Hatchback FWD 270920		Flexible Coupling Kit	537796S
	2014.08-2018.12		Centre	Hatchback 4WD 270920		Center Bearing Support	538648
	2014.08-2018.12		Rear	Hatchback 4WD 270920		Flexible Coupling	537818
	2014.08-2018.12		Front	Hatchback 4WD 270920		Flexible Coupling Kit	537796S
C160							
1.5 (95 kw)	2019.06-2019.11		Front;Rear	Estate RWD 264915	9AT	Flexible Coupling	537627
	2019.06-2019.11		Front;Rear	Estate RWD 264915		Flexible Coupling Kit	537627S
	2019.06-2021.05		Front;Rear	Saloon RWD 264915	9AT	Flexible Coupling	537627
	2019.06-2021.05		Front;Rear	Saloon RWD 264915		Flexible Coupling Kit	537627S
1.6 (95 kw)	2015.04-2019.11		Centre	Estate RWD 274910		Center Bearing Support	538622
	2015.04-2019.11		Centre	Saloon RWD 274910		Center Bearing Support	538622
	2015.04-2019.11		Front;Rear	Estate RWD 274910	7AT	Flexible Coupling	512678
	2015.04-2019.11		Front;Rear	Saloon RWD 274910	7AT	Flexible Coupling	512678
	2015.04-2019.11		Front;Rear	Estate RWD 274910	7AT;9AT;6MT	Flexible Coupling	537627
	2015.04-2019.11		Front;Rear	Saloon RWD 274910	6MT;9AT	Flexible Coupling	537627
	2015.04-2019.11		Front;Rear	Estate RWD 274910	Inner diameter:50mm	Flexible Coupling Kit	512673S
	2015.04-2019.11		Front;Rear	Saloon RWD 274910	Inner diameter:50mm	Flexible Coupling Kit	512673S
	2015.04-2019.11		Front;Rear	Estate RWD 274910	Inner diameter:48.5mm	Flexible Coupling Kit	537627S
	2015.04-2019.11		Front;Rear	Saloon RWD 274910	Inner diameter:48.5mm	Flexible Coupling Kit	537627S
1.8 (90 kw)	2004.09-2006.07		Centre	Coupe RWD 271921	with bearing	Center Bearing Support	538639
	2004.09-2006.07		Front;Rear	Coupe RWD 271921		Flexible Coupling	512678
	2004.09-2006.07		Front;Rear	Coupe RWD 271921		Flexible Coupling Kit	512673S
C180							
1.5 (115 kw)	2019.06-2021.02		Front;Rear	Estate RWD 264915	9AT	Flexible Coupling	537627
	2019.06-2021.02		Front;Rear	Estate RWD 264915		Flexible Coupling Kit	537627S
	2019.06-2021.05		Front;Rear	Saloon RWD 264915	9AT	Flexible Coupling	537627
	2019.06-2021.05		Front;Rear	Saloon RWD 264915		Flexible Coupling Kit	537627S
	2019.06-2023.04		Front;Rear	Coupe RWD 264915	9AT	Flexible Coupling	537627
	2019.06-2023.04		Front;Rear	Cabriolet RWD 264915	9AT	Flexible Coupling	537627
	2019.06-2023.04		Front;Rear	Coupe RWD 264915		Flexible Coupling Kit	537627S
	2019.06-2023.04		Front;Rear	Cabriolet RWD 264915		Flexible Coupling Kit	537627S
1.6 (85 kw)	2014.05-2018.05		Front;Rear	Saloon RWD 626951	Inner diameter:49.5mm	Flexible Coupling	512678
	2014.05-2018.05		Front;Rear	Saloon RWD 626951	Inner diameter:48.5mm	Flexible Coupling	537627
	2014.05-2018.05		Front;Rear	Saloon RWD 626951	Inner diameter:50mm	Flexible Coupling Kit	512673S
	2014.05-2018.05		Front;Rear	Saloon RWD 626951	Inner diameter:48.5mm	Flexible Coupling Kit	537627S
	2014.09-2018.05		Front;Rear	Estate RWD 626951	7AT	Flexible Coupling	512678
	2014.09-2018.05		Front;Rear	Estate RWD 626951	7AT;6MT	Flexible Coupling	537627
	2014.09-2018.05		Front;Rear	Estate RWD 626951	Inner diameter:50mm	Flexible Coupling Kit	512673S
	2014.09-2018.05		Front;Rear	Estate RWD 626951	Inner diameter:48.5mm	Flexible Coupling Kit	537627S
1.6 (90 kw)	2018.05-2021.02		Front;Rear	Estate RWD 654916		Flexible Coupling Kit	537630S
	2018.05-2021.05		Rear	Saloon RWD 654916		Flexible Coupling Kit	537630S
1.6 (110 kw)	2018.10-2021.03		Front;Rear	Saloon RWD 274910		Flexible Coupling	537627
	2018.10-2021.03		Front;Rear	Saloon RWD 274910		Flexible Coupling Kit	537627S
	2018.11-2020.08		Front;Rear	Coupe RWD 274910	Inner diameter:49.5mm	Flexible Coupling	512678
	2018.11-2020.08		Front;Rear	Coupe RWD 274910	Inner diameter:48.5mm	Flexible Coupling	537627
	2018.11-2020.08		Front;Rear	Coupe RWD 274910	Inner diameter:50mm	Flexible Coupling Kit	512673S
	2018.11-2020.08		Front;Rear	Coupe RWD 274910	Inner diameter:48.5mm	Flexible Coupling Kit	537627S
1.6 (115 kw)	2008.02-2014.01		Centre	Saloon RWD 271910		Center Bearing Support	538668
	2008.02-2014.01		Centre	Estate RWD 271910		Center Bearing Support	538668
	2008.02-2014.01		Front;Rear	Saloon RWD 271910		Flexible Coupling	512678
	2008.02-2014.01		Front;Rear	Estate RWD 271910		Flexible Coupling	512678
	2008.02-2014.01		Front;Rear	Saloon RWD 271910		Flexible Coupling Kit	512673S
	2008.02-2014.01		Front;Rear	Estate RWD 271910		Flexible Coupling Kit	512673S
	2012.02-2014.01		Centre	Estate RWD 274910		Center Bearing Support	538668
	2012.02-2014.01		Front;Rear	Estate RWD 274910		Flexible Coupling	512678
	2012.02-2014.01		Front;Rear	Estate RWD 274910		Flexible Coupling Kit	512673S

	YEAR	TRANSM.	FITTING POSITION	BODY STYLE & DRIVE TYPE & ENGINE	REMARKS	PRODUCT	GSP Ref.
MERCEDES-BENZ **C180**							
1.6 (115 kw)	2012.04-2014.01		Centre	Saloon RWD 274910		Center Bearing Support	538668
	2012.04-2014.01		Front;Rear	Saloon RWD 274910		Flexible Coupling	512678
	2012.04-2014.01		Front;Rear	Saloon RWD 274910		Flexible Coupling Kit	512673S
	2012.07-2014.01		Centre	Coupe RWD 274910		Center Bearing Support	538668
	2012.07-2014.01		Front;Rear	Coupe RWD 274910		Flexible Coupling	512678
	2012.07-2014.01		Front;Rear	Coupe RWD 274910		Flexible Coupling Kit	512673S
	2013.07-2021.03		Centre	Saloon RWD 274910		Center Bearing Support	538622
	2013.07-2021.03		Front;Rear	Saloon RWD 274910	7AT	Flexible Coupling	512678
	2013.07-2021.03		Front;Rear	Saloon RWD 274910	7AT;9AT;6MT	Flexible Coupling	537627
	2013.07-2021.03		Front;Rear	Saloon RWD 274910	Inner diameter:50mm	Flexible Coupling Kit	512673S
	2013.07-2021.03		Front;Rear	Saloon RWD 274910	Inner diameter:48.5mm	Flexible Coupling Kit	537627S
	2014.09-2020.08		Centre	Estate RWD 274910		Center Bearing Support	538622
	2014.09-2020.08		Front;Rear	Estate RWD 274910	7AT	Flexible Coupling	512678
	2014.09-2020.08		Front;Rear	Estate RWD 274910	7AT;9AT;6MT	Flexible Coupling	537627
	2014.09-2020.08		Front;Rear	Estate RWD 274910	Inner diameter:50mm	Flexible Coupling Kit	512673S
	2014.09-2020.08		Front;Rear	Estate RWD 274910	Inner diameter:48.5mm	Flexible Coupling Kit	537627S
	2015.10-2020.08		Centre	Coupe RWD 274910		Center Bearing Support	538622
	2015.10-2020.08		Front;Rear	Coupe RWD 274910	7AT	Flexible Coupling	512678
	2015.10-2020.08		Front;Rear	Coupe RWD 274910	7AT;9AT;6MT	Flexible Coupling	537627
	2015.10-2020.08		Front;Rear	Coupe RWD 274910	Inner diameter:50mm	Flexible Coupling Kit	512673S
	2015.10-2020.08		Front;Rear	Coupe RWD 274910	Inner diameter:48.5mm	Flexible Coupling Kit	537627S
	2016.06-2020.08		Centre	Cabriolet RWD 274910		Center Bearing Support	538622
	2016.06-2020.08		Front;Rear	Cabriolet RWD 274910	7AT	Flexible Coupling	512678
	2016.06-2020.08		Front;Rear	Cabriolet RWD 274910	7AT;9AT;6MT	Flexible Coupling	537627
	2016.06-2020.08		Front;Rear	Cabriolet RWD 274910	Inner diameter:50mm	Flexible Coupling Kit	512673S
	2016.06-2020.08		Front;Rear	Cabriolet RWD 274910	Inner diameter:48.5mm	Flexible Coupling Kit	537627S
1.8 (89 kw)	1994.11-2000.05		Centre	Saloon RWD 111921		Center Bearing Support	538669
	1994.11-2000.05		Front	Saloon RWD 111921		Flexible Coupling	510569
	1994.11-2000.05		Front	Saloon RWD 111921		Flexible Coupling	517747
	1994.11-2000.05		Rear	Saloon RWD 111921		Flexible Coupling	510460
	1994.11-2000.05		Front	Saloon RWD 111921	Inner diameter:37mm,510434S and 510578S different structure	Flexible Coupling Kit	510434S
	1994.11-2000.05		Front	Saloon RWD 111921	Inner diameter:37mm,510578S and 510434S different structure	Flexible Coupling Kit	510578S
	1994.11-2000.05		Front	Saloon RWD 111921	Inner diameter:32mm	Flexible Coupling Kit	537791S
	1994.11-2000.05		Front	Saloon RWD 111921	Inner diameter:32mm	Flexible Coupling Kit	537820S
	1994.11-2000.05		Front	Saloon RWD 111921	Inner diameter:41mm	Flexible Coupling Kit	537821S
	1994.11-2000.05		Rear	Saloon RWD 111921		Flexible Coupling Kit	510459S
	1994.11-2000.05		Front;Rear	Saloon RWD 111921	Inner diameter:39mm	Flexible Coupling Kit	510570S
1.8 (90 kw)	1993.06-2000.10		Centre	Saloon RWD 111920/111921		Center Bearing Support	538669
	1993.06-2000.10		Front	Saloon RWD 111920/111921		Flexible Coupling	510569
	1993.06-2000.10		Front	Saloon RWD 111920/111921		Flexible Coupling	517747
	1993.06-2000.10		Front	Saloon RWD 111920/111921	MT,not for taxis	Flexible Coupling	538136
	1993.06-2000.10		Rear	Saloon RWD 111920/111921		Flexible Coupling	510460
	1993.06-2000.10		Front	Saloon RWD 111920/111921	Inner diameter:37mm,510434S and 510578S different structure	Flexible Coupling Kit	510434S
	1993.06-2000.10		Front	Saloon RWD 111920/111921	Inner diameter:37mm,510578S and 510434S different structure	Flexible Coupling Kit	510578S
	1993.06-2000.10		Front	Saloon RWD 111920/111921	Inner diameter:32mm	Flexible Coupling Kit	537791S
	1993.06-2000.10		Front	Saloon RWD 111920/111921	Inner diameter:32mm	Flexible Coupling Kit	537820S
	1993.06-2000.10		Front	Saloon RWD 111920/111921	Inner diameter:41mm	Flexible Coupling Kit	537821S
	1993.06-2000.10		Rear	Saloon RWD 111920/111921		Flexible Coupling Kit	510459S
	1993.06-2000.10		Front;Rear	Saloon RWD 111920/111921	Inner diameter:39mm	Flexible Coupling Kit	510570S
	1996.02-2000.10		Centre	Estate RWD 111920/111921		Center Bearing Support	538669
	1996.02-2000.10		Front	Estate RWD 111920/111921		Flexible Coupling	510569
	1996.02-2000.10		Front	Estate RWD 111920/111921		Flexible Coupling	517747
	1996.02-2000.10		Front	Estate RWD 111920/111921	MT,not for taxis	Flexible Coupling	538136
	1996.02-2000.10		Rear	Estate RWD 111920/111921		Flexible Coupling	510460
	1996.02-2000.10		Front	Estate RWD 111920/111921		Flexible Coupling Kit	510578S
	1996.02-2000.10		Front	Estate RWD 111920/111921	Chassis no. to:F 711023,MT,for vehicles without air conditioning	Flexible Coupling Kit	537820S
	1996.02-2000.10		Front	Estate RWD 111920/111921	MT,for vehicles with air conditioning	Flexible Coupling Kit	537821S
	1996.02-2000.10		Rear	Estate RWD 111920/111921		Flexible Coupling Kit	510459S
	1996.02-2000.10		Front;Rear	Estate RWD 111920/111921		Flexible Coupling Kit	510570S
1.8 (105 kw)	2002.05-2007.02		Centre	Saloon RWD 271946	with bearing	Center Bearing Support	538639
	2002.05-2007.02		Front;Rear	Saloon RWD 271946		Flexible Coupling	512678
	2002.05-2007.02		Front;Rear	Saloon RWD 271946		Flexible Coupling Kit	512673S
	2002.05-2007.11		Centre	Estate RWD 271946	with bearing	Center Bearing Support	538639
	2002.05-2007.11		Front;Rear	Estate RWD 271946		Flexible Coupling	512678

	YEAR	TRANSM.	FITTING POSITION	BODY STYLE & DRIVE TYPE & ENGINE	REMARKS	PRODUCT	GSP Ref.
MERCEDES-BENZ							
C180							
1.8 (105 kw)	2002.05-2007.11		Front;Rear	Estate RWD 271946		Flexible Coupling Kit	512673S
	2002.06-2008.01		Centre	Coupe RWD 271946		Center Bearing Support	538639
	2002.06-2008.01		Front;Rear	Coupe RWD 271946		Flexible Coupling	512678
	2002.06-2008.01		Front	Coupe RWD 271946		Flexible Coupling Kit	537797S
	2002.06-2008.01		Front;Rear	Coupe RWD 271946		Flexible Coupling Kit	512673S
1.8 (115 kw)	2007.01-2014.01	7AT	Rear	Saloon RWD 271820/271952	For Modelcode:204.049	Propshaft	PS901659
	2007.01-2014.01		Centre	Saloon RWD 271820/271952		Center Bearing Support	538668
	2007.01-2014.01		Front;Rear	Saloon RWD 271820/271952		Flexible Coupling	512678
	2007.01-2014.01		Front;Rear	Saloon RWD 271820/271952		Flexible Coupling Kit	512673S
	2007.08-2014.01	7AT	Rear	Estate RWD 271820/271952	For Modelcode:204.249	Propshaft	PS901659
	2007.08-2014.01		Centre	Estate RWD 271820/271952		Center Bearing Support	538668
	2007.08-2014.01		Front;Rear	Estate RWD 271820/271952		Flexible Coupling	512678
	2007.08-2014.01		Front;Rear	Estate RWD 271820/271952		Flexible Coupling Kit	512673S
	2011.06-2014.01	7AT	Rear	Coupe RWD 271820		Propshaft	PS901659
	2011.06-2014.01		Centre	Coupe RWD 271820		Center Bearing Support	538668
	2011.06-2014.01		Front;Rear	Coupe RWD 271820	7AT	Flexible Coupling	512677
	2011.06-2014.01		Front;Rear	Coupe RWD 271820		Flexible Coupling Kit	512673S
	2011.06-2014.01		Front;Rear	Coupe RWD 271820		Flexible Coupling Kit	512677S
	2011.06-2014.01		Front;Rear	Coupe RWD 271820	7AT	Flexible Coupling Kit	537794S
2.0 (95 kw)	2000.06-2002.05		Front	Saloon RWD 111951		Flexible Coupling	510569
	2000.06-2002.05		Front;Rear	Saloon RWD 111951		Flexible Coupling Kit	510570S
	2000.09-2001.03		Front	Estate RWD 111952		Flexible Coupling	510569
	2000.09-2001.03		Rear	Estate RWD 111952		Flexible Coupling	510460
	2000.09-2001.03		Front;Rear	Estate RWD 111952		Flexible Coupling	512678
	2000.09-2001.03		Front	Estate RWD 111952	MT	Flexible Coupling Kit	537821S
	2000.09-2001.03		Front;Rear	Estate RWD 111952	AT	Flexible Coupling Kit	510570S
	2000.09-2001.03		Front;Rear	Estate RWD 111952		Flexible Coupling Kit	512673S
	2000.11-2002.08		Front	Estate RWD 111951		Flexible Coupling	510569
	2000.11-2002.08		Front;Rear	Estate RWD 111951		Flexible Coupling Kit	510570S
	2001.03-2002.07		Front	Coupe RWD 111951		Flexible Coupling	510569
	2001.03-2002.07		Front;Rear	Coupe RWD 111951		Flexible Coupling Kit	510570S
2.2 (88 kw)	2010.04-2014.01		Centre	Estate RWD 651913		Center Bearing Support	539927
	2010.04-2014.01		Front;Rear	Estate RWD 651913	5AT;6MT;7AT	Flexible Coupling	512677
	2010.04-2014.01		Front	Estate RWD 651913	5AT;6MT;7AT	Flexible Coupling Kit	537794S
	2010.04-2014.01		Front;Rear	Estate RWD 651913		Flexible Coupling Kit	512677S
	2010.04-2014.03		Centre	Saloon RWD 651913		Center Bearing Support	539927
	2010.04-2014.03		Front;Rear	Saloon RWD 651913	5AT;6MT;7AT	Flexible Coupling	512677
	2010.04-2014.03		Front	Saloon RWD 651913	5AT;6MT;7AT	Flexible Coupling Kit	537794S
	2010.04-2014.03		Front;Rear	Saloon RWD 651913		Flexible Coupling Kit	512677S
C200							
1.5 (135 kw)	2018.04-2021.02		Front;Rear	Estate RWD 264915	9AT	Flexible Coupling	537627
	2018.04-2021.02		Front;Rear	Estate 4WD 264915	9AT	Flexible Coupling	537627
	2018.04-2021.02		Front;Rear	Estate RWD 264915		Flexible Coupling Kit	537627S
	2018.04-2021.02		Front;Rear	Estate 4WD 264915		Flexible Coupling Kit	537627S
	2018.04-2021.05		Front;Rear	Saloon 4WD 264915	9AT	Flexible Coupling	537627
	2018.04-2021.05		Front;Rear	Saloon 4WD 264915		Flexible Coupling Kit	537627S
	2018.04-2021.06		Front;Rear	Saloon RWD 264915	9AT	Flexible Coupling	537627
	2018.04-2021.06		Front;Rear	Saloon RWD 264915		Flexible Coupling Kit	537627S
	2018.05-2023.04		Front;Rear	Coupe 4WD 264915	9AT	Flexible Coupling	537627
	2018.05-2023.04		Front;Rear	Cabriolet 4WD 264915	9AT	Flexible Coupling	537627
	2018.05-2023.04		Front;Rear	Coupe RWD 264915	9AT	Flexible Coupling	537627
	2018.05-2023.04		Front;Rear	Cabriolet RWD 264915	9AT	Flexible Coupling	537627
	2018.05-2023.04		Front;Rear	Coupe 4WD 264915		Flexible Coupling Kit	537627S
	2018.05-2023.04		Front;Rear	Cabriolet 4WD 264915		Flexible Coupling Kit	537627S
	2018.05-2023.04		Front;Rear	Coupe RWD 264915		Flexible Coupling Kit	537627S
	2018.05-2023.04		Front;Rear	Cabriolet RWD 264915		Flexible Coupling Kit	537627S
1.6 (100 kw)	2014.05-2018.05	AT	Rear	Saloon RWD 626951		Propshaft	PS900571
	2014.05-2018.05		Front;Rear	Saloon RWD 626951	7AT	Flexible Coupling	512678
	2014.05-2018.05		Front;Rear	Saloon RWD 626951	6MT	Flexible Coupling	537627
	2014.05-2018.05		Front;Rear	Saloon RWD 626951	Inner diameter:50mm	Flexible Coupling Kit	512673S
	2014.05-2018.05		Front;Rear	Saloon RWD 626951	Inner diameter:48.5mm	Flexible Coupling Kit	537627S
	2014.09-2018.05		Front;Rear	Estate RWD 626951	7AT	Flexible Coupling	512678
	2014.09-2018.05		Front;Rear	Estate RWD 626951	7AT;6MT	Flexible Coupling	537627
	2014.09-2018.05		Front;Rear	Estate RWD 626951	Inner diameter:50mm	Flexible Coupling Kit	512673S

	YEAR	TRANSM.	FITTING POSITION	BODY STYLE & DRIVE TYPE & ENGINE	REMARKS	PRODUCT	GSP Ref.
MERCEDES-BENZ **C200**							
1.6 (100 kw)	2014.09-2018.05		Front;Rear	Estate RWD 626951	Inner diameter:48.5mm	Flexible Coupling Kit	537627S
1.6 (118 kw)	2018.05-2021.02		Front;Rear	Estate RWD 654916		Flexible Coupling Kit	537630S
	2018.05-2021.05		Rear	Saloon RWD 654916		Flexible Coupling Kit	537630S
	2018.07-2019.11		Front;Rear	Cabriolet RWD 654916		Flexible Coupling Kit	537630S
	2018.07-2019.11		Front;Rear	Coupe RWD 654916		Flexible Coupling Kit	537630S
1.8 (120 kw)	2002.05-2007.11		Centre	Saloon RWD 271940	with bearing	Center Bearing Support	538639
	2002.05-2007.11		Centre	Estate RWD 271940		Center Bearing Support	538639
	2002.05-2007.11		Front;Rear	Saloon RWD 271940		Flexible Coupling	512678
	2002.05-2007.11		Front;Rear	Estate RWD 271940		Flexible Coupling	512678
	2002.05-2007.11		Front;Rear	Saloon RWD 271940		Flexible Coupling Kit	512673S
	2002.05-2007.11		Front;Rear	Estate RWD 271940		Flexible Coupling Kit	512673S
	2002.05-2007.11		Front;Rear	Saloon RWD 271940		Flexible Coupling Kit	512678S
	2002.05-2007.11		Front;Rear	Estate RWD 271940		Flexible Coupling Kit	512678S
	2002.08-2005.04		Centre	Coupe RWD 271940	with bearing	Center Bearing Support	538639
	2002.08-2005.04		Front;Rear	Coupe RWD 271940		Flexible Coupling	512678
	2002.08-2005.04		Front;Rear	Coupe RWD 271940		Flexible Coupling Kit	512673S
1.8 (125 kw)	2002.08-2005.09		Centre	Coupe RWD 271942	with bearing	Center Bearing Support	538639
	2002.08-2005.09		Front;Rear	Coupe RWD 271942		Flexible Coupling	512678
	2002.08-2005.09		Front;Rear	Coupe RWD 271942		Flexible Coupling Kit	512673S
	2003.07-2004.07		Centre	Saloon RWD 271942	with bearing	Center Bearing Support	538639
	2003.07-2004.07		Centre	Estate RWD 271942	with bearing	Center Bearing Support	538639
	2003.07-2004.07		Front;Rear	Saloon RWD 271942		Flexible Coupling	512678
	2003.07-2004.07		Front;Rear	Estate RWD 271942		Flexible Coupling	512678
	2003.07-2004.07		Front	Estate RWD 271942		Flexible Coupling Kit	537797S
	2003.07-2004.07		Front;Rear	Saloon RWD 271942		Flexible Coupling Kit	512673S
	2003.07-2004.07		Front;Rear	Estate RWD 271942		Flexible Coupling Kit	512673S
1.8 (135 kw)	2007.01-2014.01	5AT	Rear	Saloon RWD 271820/271860/271950		Propshaft	PS901658
	2007.01-2014.01		Centre	Saloon RWD 271820/271860/271950		Center Bearing Support	538668
	2007.01-2014.01		Front;Rear	Saloon RWD 271820/271860/271950		Flexible Coupling	512678
	2007.01-2014.01		Front;Rear	Saloon RWD 271820/271860/271950		Flexible Coupling Kit	512673S
	2007.08-2014.01	7AT	Rear	Estate RWD 271820/271860/271950	For Modelcode:204.248	Propshaft	PS901659
	2007.08-2014.01		Centre	Estate RWD 271820/271860/271950		Center Bearing Support	538668
	2007.08-2014.01		Front;Rear	Estate RWD 271820/271860/271950		Flexible Coupling	512678
	2007.08-2014.01		Front;Rear	Estate RWD 271820/271860/271950		Flexible Coupling Kit	512673S
	2011.06-2014.01	7AT	Rear	Coupe RWD 271860		Propshaft	PS901659
	2011.06-2014.01		Centre	Coupe RWD 271860		Center Bearing Support	538668
	2011.06-2014.01		Front	Coupe RWD 271860		Flexible Coupling	537630
	2011.06-2014.01		Front;Rear	Coupe RWD 271860	7AT	Flexible Coupling	512677
	2011.06-2014.01		Rear	Coupe RWD 271860	9AT	Flexible Coupling Kit	537630S
	2011.06-2014.01		Front;Rear	Coupe RWD 271860		Flexible Coupling Kit	512673S
	2011.06-2014.01		Front;Rear	Coupe RWD 271860		Flexible Coupling Kit	512677S
	2011.06-2014.01		Front;Rear	Coupe RWD 271860	7AT	Flexible Coupling Kit	537794S
1.8 (137 kw)	2009.09-2014.01	7AT	Rear	Saloon RWD 271820		Propshaft	PS901659
	2009.09-2014.01		Centre	Saloon RWD 271820		Center Bearing Support	538668
	2009.09-2014.01		Front;Rear	Saloon RWD 271820		Flexible Coupling	512678
	2009.09-2014.01		Front;Rear	Saloon RWD 271820		Flexible Coupling Kit	512673S
2.0 (55 kw)	1993.06-2000.05		Centre	Saloon RWD 601913		Center Bearing Support	538669
	1993.06-2000.05		Front	Saloon RWD 601913		Flexible Coupling	510458
	1993.06-2000.05		Front	Saloon RWD 601913		Flexible Coupling	510569
	1993.06-2000.05		Front	Saloon RWD 601913		Flexible Coupling	517747
	1993.06-2000.05		Front	Saloon RWD 601913	MT,not for taxis	Flexible Coupling	538136
	1993.06-2000.05		Rear	Saloon RWD 601913		Flexible Coupling	510460
	1993.06-2000.05		Front	Saloon RWD 601913	Inner diameter:37mm,510434S and 510578S different structure	Flexible Coupling Kit	510434S
	1993.06-2000.05		Front	Saloon RWD 601913	Inner diameter:37mm,510578S and 510434S different structure	Flexible Coupling Kit	510578S
	1993.06-2000.05		Front	Saloon RWD 601913	Inner diameter:32mm	Flexible Coupling Kit	537820S
	1993.06-2000.05		Front	Saloon RWD 601913	Inner diameter:41mm	Flexible Coupling Kit	537821S
	1993.06-2000.05		Front	Saloon RWD 601913	AT,not for taxis;Inner diameter:38.5mm,Bolt Hole Centres:80mm	Flexible Coupling Kit	538137S
	1993.06-2000.05		Rear	Saloon RWD 601913		Flexible Coupling Kit	510459S
	1993.06-2000.05		Rear	Saloon RWD 601913	Inner diameter:39mm,Bolt Hole Centres:90mm	Flexible Coupling Kit	510570S
2.0 (65 kw)	1995.07-2000.05		Centre	Saloon RWD 604915		Center Bearing Support	538669
	1995.07-2000.05		Centre	Estate RWD 604915		Center Bearing Support	538669
	1995.07-2000.05		Front	Saloon RWD 604915		Flexible Coupling	510569
	1995.07-2000.05		Front	Estate RWD 604915		Flexible Coupling	510569
	1995.07-2000.05		Front	Saloon RWD 604915		Flexible Coupling	517747

	YEAR	TRANSM.	FITTING POSITION	BODY STYLE & DRIVE TYPE & ENGINE	REMARKS	PRODUCT	GSP Ref.
MERCEDES-BENZ **C200**							
2.0 (65 kw)	1995.07-2000.05		Front	Estate RWD 604915		Flexible Coupling	517747
	1995.07-2000.05		Front	Saloon RWD 604915	MT,not for taxis	Flexible Coupling	538136
	1995.07-2000.05		Rear	Saloon RWD 604915		Flexible Coupling	510460
	1995.07-2000.05		Rear	Estate RWD 604915		Flexible Coupling	510460
	1995.07-2000.05		Front	Saloon RWD 604915	Inner diameter:37mm,510434S and 510578S different structure	Flexible Coupling Kit	510434S
	1995.07-2000.05		Front	Saloon RWD 604915	Inner diameter:37mm,510578S and 510434S different structure	Flexible Coupling Kit	510578S
	1995.07-2000.05		Front	Saloon RWD 604915	Inner diameter:32mm	Flexible Coupling Kit	537791S
	1995.07-2000.05		Front	Estate RWD 604915		Flexible Coupling Kit	537791S
	1995.07-2000.05		Front	Saloon RWD 604915	Inner diameter:32mm	Flexible Coupling Kit	537820S
	1995.07-2000.05		Front	Saloon RWD 604915	Inner diameter:41mm	Flexible Coupling Kit	537821S
	1995.07-2000.05		Rear	Saloon RWD 604915		Flexible Coupling Kit	510459S
	1995.07-2000.05		Rear	Estate RWD 604915		Flexible Coupling Kit	510459S
	1995.07-2000.05		Rear	Saloon RWD 604915	Inner diameter:39mm	Flexible Coupling Kit	510570S
	1995.07-2000.05		Front;Rear	Estate RWD 604915		Flexible Coupling Kit	510570S
2.0 (100 kw)	1993.06-2000.05		Centre	Saloon RWD 111941/111945		Center Bearing Support	538669
	1993.06-2000.05		Front	Saloon RWD 111941/111945		Flexible Coupling	510569
	1993.06-2000.05		Front	Saloon RWD 111941/111945		Flexible Coupling	512326
	1993.06-2000.05		Front	Saloon RWD 111941/111945	Inner diameter:37mm,510434S and 510578S different structure	Flexible Coupling Kit	510434S
	1993.06-2000.05		Front	Saloon RWD 111941/111945	Inner diameter:37mm,510578S and 510434S different structure	Flexible Coupling Kit	510578S
	1993.06-2000.05		Front	Saloon RWD 111941/111945	Inner diameter:41mm	Flexible Coupling Kit	537821S
	1993.06-2000.05		Front;Rear	Saloon RWD 111941/111945	Inner diameter:39mm	Flexible Coupling Kit	510570S
	1996.02-2000.10		Centre	Estate RWD 111941/111945		Center Bearing Support	538669
	1996.02-2000.10		Front	Estate RWD 111941/111945		Flexible Coupling	510569
	1996.02-2000.10		Front	Estate RWD 111941/111945	MT,not for taxis,for vehicles without air conditioning	Flexible Coupling	512326
	1996.02-2000.10		Front	Estate RWD 111941/111945		Flexible Coupling Kit	510578S
	1996.02-2000.10		Front	Estate RWD 111941/111945	MT,for vehicles with air conditioning	Flexible Coupling Kit	537821S
	1996.02-2000.10		Front;Rear	Estate RWD 111941/111945		Flexible Coupling Kit	510570S
2.0 (110 kw)	2018.05-2018.11		Front;Rear	Estate RWD 654920		Flexible Coupling Kit	537630S
	2018.05-2018.11		Front;Rear	Saloon RWD 654920		Flexible Coupling Kit	537630S
2.0 (120 kw)	2000.06-2002.07		Centre	Saloon RWD 111955		Center Bearing Support	538639
	2000.06-2002.07		Front	Saloon RWD 111955	538111 and 512678 different structure	Flexible Coupling	538111
	2000.06-2002.07		Front;Rear	Saloon RWD 111955	512678 and 538111 different structure	Flexible Coupling	512678
	2000.06-2002.07		Front	Saloon RWD 111955		Flexible Coupling Kit	537797S
	2000.06-2002.07		Front;Rear	Saloon RWD 111955		Flexible Coupling Kit	512673S
	2000.09-2001.03		Centre	Estate RWD 111956		Center Bearing Support	538666
	2000.09-2001.03		Front	Estate RWD 111956		Flexible Coupling	510571
	2000.09-2001.03		Front	Estate RWD 111956	538111 and 510571 different structure	Flexible Coupling	538111
	2000.09-2001.03		Rear	Estate RWD 111956		Flexible Coupling	512678
	2000.09-2001.03		Front	Estate RWD 111956		Flexible Coupling Kit	510571S
	2000.09-2001.03		Front;Rear	Estate RWD 111956		Flexible Coupling Kit	512673S
	2000.11-2002.08		Centre	Estate RWD 111955		Center Bearing Support	538639
	2000.11-2002.08		Front	Estate RWD 111955	538111 and 512678 different structure	Flexible Coupling	538111
	2000.11-2002.08		Front;Rear	Estate RWD 111955	512678 and 538111 different structure	Flexible Coupling	512678
	2000.11-2002.08		Front	Estate RWD 111955		Flexible Coupling Kit	537797S
	2000.11-2002.08		Front;Rear	Estate RWD 111955		Flexible Coupling Kit	512673S
	2001.03-2004.12		Centre	Coupe RWD 111955		Center Bearing Support	538639
	2001.03-2004.12		Front	Coupe RWD 111955	538111 and 512678 different structure	Flexible Coupling	538111
	2001.03-2004.12		Front;Rear	Coupe RWD 111955	512678 and 538111 different structure	Flexible Coupling	512678
	2001.03-2004.12		Front	Coupe RWD 111955		Flexible Coupling Kit	537797S
	2001.03-2004.12		Front;Rear	Coupe RWD 111955		Flexible Coupling Kit	512673S
	2021.07-		Front;Rear	Saloon RWD 654820		Flexible Coupling	537851
	2021.07-		Front;Rear	Estate RWD 654820		Flexible Coupling	537851
2.0 (132 kw)	1995.10-2000.05		Centre	Saloon RWD 111944		Center Bearing Support	538666
	1995.10-2000.05		Front	Saloon RWD 111944	Chassis no. to:F 381313,MT	Flexible Coupling	510569
	1995.10-2000.05		Front	Saloon RWD 111944	For OE No.124 411 05 15	Flexible Coupling	510571
	1995.10-2000.05		Front;Rear	Saloon RWD 111944		Flexible Coupling	510579
	1995.10-2000.05		Front	Saloon RWD 111944	Inner diameter:37mm	Flexible Coupling Kit	510434S
	1995.10-2000.05		Front	Saloon RWD 111944	Inner diameter:39m	Flexible Coupling Kit	510570S
	1995.10-2000.05		Front	Saloon RWD 111944	Inner diameter:42mm	Flexible Coupling Kit	510571S
	1995.10-2000.05		Front	Saloon RWD 111944	Inner diameter:46.5mm	Flexible Coupling Kit	510580S
2.0 (135 kw)	2013.12-2018.08		Centre	Saloon RWD 274920		Center Bearing Support	538622
	2013.12-2018.08		Front;Rear	Saloon RWD 274920	7AT	Flexible Coupling	512678
	2013.12-2018.08		Front;Rear	Saloon RWD 274920	7AT;9AT;6MT	Flexible Coupling	537627
	2013.12-2018.08		Front;Rear	Saloon RWD 274920	Inner diameter:50mm	Flexible Coupling Kit	512673S

	YEAR	TRANSM.	FITTING POSITION	BODY STYLE & DRIVE TYPE & ENGINE	REMARKS	PRODUCT	GSP Ref.
MERCEDES-BENZ **C200**							
2.0 (135 kw)	2013.12-2018.08		Front;Rear	Saloon RWD 274920	Inner diameter:48.5mm	Flexible Coupling Kit	537627S
	2014.09-2018.05		Centre	Estate RWD 274920		Center Bearing Support	538622
	2014.09-2018.05		Front;Rear	Estate RWD 274920	7AT	Flexible Coupling	512678
	2014.09-2018.05		Front;Rear	Estate RWD 274920	7AT;9AT;6MT	Flexible Coupling	537627
	2014.09-2018.05		Front;Rear	Estate RWD 274920	Inner diameter:50mm	Flexible Coupling Kit	512673S
	2014.09-2018.05		Front;Rear	Estate RWD 274920	Inner diameter:48.5mm	Flexible Coupling Kit	537627S
	2015.04-2018.05		Centre	Estate 4WD 274920		Center Bearing Support	538622
	2015.04-2018.05		Front;Rear	Estate 4WD 274920	7AT	Flexible Coupling	512678
	2015.04-2018.05		Front;Rear	Estate 4WD 274920	7AT;9AT	Flexible Coupling	537627
	2015.04-2018.05		Front;Rear	Estate 4WD 274920	Inner diameter:50mm	Flexible Coupling Kit	512673S
	2015.04-2018.05		Front;Rear	Estate 4WD 274920	Inner diameter:48.5mm	Flexible Coupling Kit	537627S
	2015.04-2018.08		Centre	Saloon 4WD 274920		Center Bearing Support	538622
	2015.04-2018.08		Front;Rear	Saloon 4WD 274920	7AT	Flexible Coupling	512678
	2015.04-2018.08		Front;Rear	Saloon 4WD 274920	7AT;9AT	Flexible Coupling	537627
	2015.04-2018.08		Front;Rear	Saloon 4WD 274920	Inner diameter:50mm	Flexible Coupling Kit	512673S
	2015.04-2018.08		Front;Rear	Saloon 4WD 274920	Inner diameter:48.5mm	Flexible Coupling Kit	537627S
	2015.10-2018.05		Centre	Coupe RWD 274920		Center Bearing Support	538622
	2015.10-2018.05		Front;Rear	Coupe RWD 274920	7AT	Flexible Coupling	512678
	2015.10-2018.05		Front;Rear	Coupe RWD 274920	7AT;9AT;6MT	Flexible Coupling	537627
	2015.10-2018.05		Front;Rear	Coupe RWD 274920	Inner diameter:50mm	Flexible Coupling Kit	512673S
	2015.10-2018.05		Front;Rear	Coupe RWD 274920	Inner diameter:48.5mm	Flexible Coupling Kit	537627S
	2016.04-2018.05		Centre	Coupe 4WD 274920		Center Bearing Support	538622
	2016.04-2018.05		Front;Rear	Coupe 4WD 274920	7AT	Flexible Coupling	512678
	2016.04-2018.05		Front;Rear	Coupe 4WD 274920	7AT;9AT	Flexible Coupling	537627
	2016.04-2018.05		Front;Rear	Coupe 4WD 274920	Inner diameter:50mm	Flexible Coupling Kit	512673S
	2016.04-2018.05		Front;Rear	Coupe 4WD 274920	Inner diameter:48.5mm	Flexible Coupling Kit	537627S
	2016.06-2018.05		Centre	Cabriolet RWD 274920		Center Bearing Support	538622
	2016.06-2018.05		Front;Rear	Cabriolet RWD 274920	7AT	Flexible Coupling	512678
	2016.06-2018.05		Front;Rear	Cabriolet 4WD 274920		Flexible Coupling	537627
	2016.06-2018.05		Front;Rear	Cabriolet RWD 274920	7AT;9AT;6MT	Flexible Coupling	537627
	2016.06-2018.05		Front;Rear	Cabriolet RWD 274920	Inner diameter:50mm	Flexible Coupling Kit	512673S
	2016.06-2018.05		Front;Rear	Cabriolet 4WD 274920	9AT	Flexible Coupling Kit	537627S
	2016.06-2018.05		Front;Rear	Cabriolet RWD 274920	Inner diameter:48.5mm	Flexible Coupling Kit	537627S
2.0 (141 kw)	1995.09-2000.10		Centre	Estate RWD 111944		Center Bearing Support	538666
	1995.09-2000.10		Front	Estate RWD 111944		Flexible Coupling	510571
	1995.09-2000.10		Front;Rear	Estate RWD 111944		Flexible Coupling	510579
	1995.09-2000.10		Front	Estate RWD 111944		Flexible Coupling Kit	510571S
	1995.09-2000.10		Front	Estate RWD 111944		Flexible Coupling Kit	510580S
	1995.10-2000.05		Centre	Saloon RWD 111944		Center Bearing Support	538666
	1995.10-2000.05		Front	Saloon RWD 111944	Chassis no. to:F 381313,MT	Flexible Coupling	510569
	1995.10-2000.05		Front	Saloon RWD 111944	For OE No.124 411 05 15	Flexible Coupling	510571
	1995.10-2000.05		Front;Rear	Saloon RWD 111944		Flexible Coupling	510579
	1995.10-2000.05		Front	Saloon RWD 111944	Inner diameter:37mm	Flexible Coupling Kit	510434S
	1995.10-2000.05		Front	Saloon RWD 111944	Inner diameter:39m	Flexible Coupling Kit	510570S
	1995.10-2000.05		Front	Saloon RWD 111944	Inner diameter:42mm	Flexible Coupling Kit	510571S
	1995.10-2000.05		Front	Saloon RWD 111944	Inner diameter:46.5mm	Flexible Coupling Kit	510580S
2.0 (150 kw)	2019.08-2021.05		Front;Rear	Saloon 4WD 264920		Flexible Coupling	537627
	2019.08-2021.05		Front;Rear	Saloon 4WD 264920		Flexible Coupling Kit	537627S
	2019.08-2023.04		Centre	Cabriolet RWD 264920		Center Bearing Support	538622
	2019.08-2023.04		Rear	Cabriolet RWD 264920		Flexible Coupling Kit	537630S
2.2 (75 kw)	1998.04-2000.05		Centre	Saloon RWD 611960		Center Bearing Support	538666
	1998.04-2000.05		Front;Rear	Saloon RWD 611960		Flexible Coupling	510579
	1998.04-2000.05		Front	Saloon RWD 611960	Inner diameter:37mm	Flexible Coupling Kit	510434S
	1998.04-2000.05		Front	Saloon RWD 611960	Inner diameter:46.5mm	Flexible Coupling Kit	510580S
	1998.04-2000.10		Centre	Estate RWD 611960		Center Bearing Support	538666
	1998.04-2000.10		Front;Rear	Estate RWD 611960	Inner diameter:46.5mm	Flexible Coupling	510579
	1998.04-2000.10		Front;Rear	Estate RWD 611960	Inner diameter:49.5mm	Flexible Coupling	512678
	1998.04-2000.10		Front	Estate RWD 611960		Flexible Coupling Kit	510580S
	1998.04-2000.10		Front;Rear	Estate RWD 611960		Flexible Coupling Kit	512673S
	2001.02-2003.06		Centre	Saloon RWD 611962		Center Bearing Support	538639
	2001.02-2003.06		Front;Rear	Saloon RWD 611962		Flexible Coupling	512678
	2001.02-2003.06		Front;Rear	Saloon RWD 611962		Flexible Coupling Kit	512673S
	2001.03-2003.03		Centre	Estate RWD 611962		Center Bearing Support	538639
	2001.03-2003.03		Front;Rear	Estate RWD 611962		Flexible Coupling	512678

	YEAR	TRANSM.	FITTING POSITION	BODY STYLE & DRIVE TYPE & ENGINE	REMARKS	PRODUCT	GSP Ref.
MERCEDES-BENZ							
C200							
2.2 (75 kw)	2001.03-2003.03		Front;Rear	Estate RWD 611962		Flexible Coupling Kit	512673S
2.2 (85 kw)	2000.09-2003.06		Centre	Saloon RWD 611962		Center Bearing Support	538639
	2000.09-2003.06		Front;Rear	Saloon RWD 611962		Flexible Coupling	512678
	2000.09-2003.06		Front;Rear	Saloon RWD 611962		Flexible Coupling Kit	512673S
	2000.09-2003.06		Front;Rear	Saloon RWD 611962		Flexible Coupling Kit	512678S
	2000.11-2003.07		Centre	Estate RWD 611962		Center Bearing Support	538639
	2000.11-2003.07		Front;Rear	Estate RWD 611962		Flexible Coupling	512678
	2000.11-2003.07		Front;Rear	Estate RWD 611962		Flexible Coupling Kit	512673S
2.2 (90 kw)	2003.04-2007.02		Centre	Saloon RWD 646962/646963	Engine Code:OM 646.962	Center Bearing Support	538639
	2003.04-2007.02		Front;Rear	Saloon RWD 646962/646963		Flexible Coupling	512678
	2003.04-2007.02		Front;Rear	Saloon RWD 646962/646963		Flexible Coupling Kit	512673S
	2003.04-2008.03		Centre	Estate RWD 646962/646963		Center Bearing Support	538639
	2003.04-2008.03		Front;Rear	Estate RWD 646962/646963		Flexible Coupling	512678
	2003.04-2008.03		Front;Rear	Estate RWD 646962/646963		Flexible Coupling Kit	512673S
	2003.07-2008.01		Centre	Coupe RWD 646962/646963		Center Bearing Support	538639
	2003.07-2008.01		Front;Rear	Coupe RWD 646962/646963		Flexible Coupling	512678
	2003.07-2008.01		Front;Rear	Coupe RWD 646962/646963		Flexible Coupling Kit	512673S
2.2 (100 kw)	2007.01-2009.12		Centre	Saloon RWD 646811/646812		Center Bearing Support	538668
	2007.01-2009.12		Front;Rear	Saloon RWD 646811/646812	6MT	Flexible Coupling	512677
	2007.01-2009.12		Front;Rear	Saloon RWD 646811/646812	5AT	Flexible Coupling	512678
	2007.01-2009.12		Front;Rear	Saloon RWD 646811/646812		Flexible Coupling Kit	512673S
	2007.01-2009.12		Front;Rear	Saloon RWD 646811/646812		Flexible Coupling Kit	512677S
	2007.01-2009.12		Front;Rear	Saloon RWD 646811/646812	6MT	Flexible Coupling Kit	537794S
	2007.08-2009.12		Centre	Estate RWD 646811		Center Bearing Support	538668
	2007.08-2009.12		Front;Rear	Estate RWD 646811	6MT	Flexible Coupling	512677
	2007.08-2009.12		Front;Rear	Estate RWD 646811	5AT	Flexible Coupling	512678
	2007.08-2009.12		Front;Rear	Estate RWD 646811		Flexible Coupling Kit	512673S
	2007.08-2009.12		Front;Rear	Estate RWD 646811		Flexible Coupling Kit	512677S
	2007.08-2009.12		Front;Rear	Estate RWD 646811	6MT	Flexible Coupling Kit	537794S
	2009.11-2014.03		Centre	Saloon RWD 651913		Center Bearing Support	539927
	2009.11-2014.03		Front;Rear	Saloon RWD 651913	5AT;6MT;7AT	Flexible Coupling	512677
	2009.11-2014.03		Front	Saloon RWD 651913	5AT;6MT;7AT	Flexible Coupling Kit	537794S
	2009.11-2014.03		Front;Rear	Saloon RWD 651913		Flexible Coupling Kit	512677S
	2010.01-2014.01		Centre	Estate RWD 651913		Center Bearing Support	539927
	2010.01-2014.01		Front;Rear	Estate RWD 651913	5AT;6MT;7AT	Flexible Coupling	512677
	2010.01-2014.01		Front	Estate RWD 651913	5AT;6MT;7AT	Flexible Coupling Kit	537794S
	2010.01-2014.01		Front;Rear	Estate RWD 651913		Flexible Coupling Kit	512677S
	2015.10-2018.05		Centre	Estate RWD 651921		Center Bearing Support	538622
	2015.10-2018.05		Centre	Saloon RWD 651921		Center Bearing Support	538622
	2015.10-2018.05		Front	Estate RWD 651921		Flexible Coupling	537630
	2015.10-2018.05		Front	Saloon RWD 651921		Flexible Coupling	537630
	2015.10-2018.05		Front;Rear	Estate RWD 651921	Inner diameter:57.5mm	Flexible Coupling	512677
	2015.10-2018.05		Front;Rear	Saloon RWD 651921	Inner diameter:57.5mm	Flexible Coupling	512677
	2015.10-2018.05		Front;Rear	Estate RWD 651921	Inner diameter:58mm	Flexible Coupling	538501
	2015.10-2018.05		Front;Rear	Saloon RWD 651921	Inner diameter:58mm	Flexible Coupling	538501
	2015.10-2018.05		Front	Saloon RWD 651921	9AT	Flexible Coupling Kit	537630S
	2015.10-2018.05		Front;Rear	Estate RWD 651921	6MT;7AT,Inner diameter:57.5mm	Flexible Coupling Kit	512677S
	2015.10-2018.05		Front;Rear	Saloon RWD 651921	Inner diameter:57.5mm	Flexible Coupling Kit	512677S
	2015.10-2018.05		Front;Rear	Estate RWD 651921	6MT,9AT	Flexible Coupling Kit	537630S
	2015.10-2018.05		Front;Rear	Estate RWD 651921	6MT,7AT,Inner diameter:58mm	Flexible Coupling Kit	538501S
	2015.10-2018.05		Front;Rear	Saloon RWD 651921	Inner diameter:58mm	Flexible Coupling Kit	538501S
C220							
2.0 (143 kw)	2018.04-2021.02		Front;Rear	Estate RWD 654920		Flexible Coupling	537630
	2018.04-2021.02		Front;Rear	Estate RWD 654920		Flexible Coupling Kit	537630S
	2018.04-2023.04		Front;Rear	Cabriolet RWD 654920		Flexible Coupling	537630
	2018.04-2023.04		Front;Rear	Coupe RWD 654920		Flexible Coupling	537630
	2018.04-2023.04		Front;Rear	Cabriolet RWD 654920		Flexible Coupling Kit	537630S
	2018.04-2023.04		Front;Rear	Coupe RWD 654920		Flexible Coupling Kit	537630S
	2018.05-2021.02		Centre	Estate 4WD 654920		Center Bearing Support	538622
	2018.05-2021.02		Front;Rear	Estate 4WD 654920	9AT	Flexible Coupling	537627
	2018.05-2021.02		Front;Rear	Estate 4WD 654920	9AT	Flexible Coupling Kit	537627S
	2018.05-2021.05		Centre	Saloon 4WD 654920		Center Bearing Support	538622
	2018.05-2021.05		Front;Rear	Saloon 4WD 654920	9AT	Flexible Coupling	537627
	2018.05-2021.05		Front;Rear	Saloon RWD 654920		Flexible Coupling	537630

	YEAR	TRANSM.	FITTING POSITION	BODY STYLE & DRIVE TYPE & ENGINE	REMARKS	PRODUCT	GSP Ref.
MERCEDES-BENZ **C220**							
2.0 (143 kw)	2018.05-2021.05		Front;Rear	Saloon 4WD 654920	9AT	Flexible Coupling Kit	537627S
	2018.05-2021.05		Front;Rear	Saloon RWD 654920		Flexible Coupling Kit	537630S
	2018.06-2023.04		Centre	Cabriolet 4WD 654920		Center Bearing Support	538622
	2018.06-2023.04		Centre	Coupe 4WD 654920		Center Bearing Support	538622
	2018.06-2023.04		Front;Rear	Cabriolet 4WD 654920	9AT	Flexible Coupling	537627
	2018.06-2023.04		Front;Rear	Coupe 4WD 654920	9AT	Flexible Coupling	537627
	2018.06-2023.04		Front;Rear	Cabriolet 4WD 654920	9AT	Flexible Coupling Kit	537627S
	2018.06-2023.04		Front;Rear	Coupe 4WD 654920	9AT	Flexible Coupling Kit	537627S
2.0 (145 kw)	2023.06-		Front;Rear	Estate RWD 654820		Flexible Coupling	537851
	2023.06-		Front;Rear	Saloon RWD 654820		Flexible Coupling	537851
2.0 (147 kw)	2021.03-		Front;Rear	Estate RWD 654820		Flexible Coupling	537851
	2021.03-		Front;Rear	Saloon RWD 654820		Flexible Coupling	537851
2.2 (55 kw)	1996.07-1999.07		Front	Estate RWD 604910		Flexible Coupling	510569
	1996.07-1999.07		Front	Estate RWD 604910	Chassis no. from:F 702941,MT,not for taxis	Flexible Coupling	512326
	1996.07-1999.07		Front	Estate RWD 604910		Flexible Coupling	517747
	1996.07-1999.07		Rear	Estate RWD 604910		Flexible Coupling	510460
	1996.07-1999.07		Front	Estate RWD 604910		Flexible Coupling Kit	510578S
	1996.07-1999.07		Front	Estate RWD 604910		Flexible Coupling Kit	537791S
	1996.07-1999.07		Front	Estate RWD 604910	Chassis no. to:F 702940,MT,not for taxis	Flexible Coupling Kit	537820S
	1996.07-1999.07		Front	Estate RWD 604910	MT,for taxis	Flexible Coupling Kit	537821S
	1996.07-1999.07		Rear	Estate RWD 604910		Flexible Coupling Kit	510459S
	1996.07-1999.07		Front;Rear	Estate RWD 604910		Flexible Coupling Kit	510570S
	1996.07-2000.05		Front	Saloon RWD 604910		Flexible Coupling	510458
	1996.07-2000.05		Front	Saloon RWD 604910		Flexible Coupling	510569
	1996.07-2000.05		Rear	Saloon RWD 604910		Flexible Coupling	510460
	1996.07-2000.05		Front	Saloon RWD 604910	Inner diameter:37mm,510434S and 510578S different structure	Flexible Coupling Kit	510434S
	1996.07-2000.05		Front	Saloon RWD 604910	Inner diameter:37mm,510578S and 510434S different structure	Flexible Coupling Kit	510578S
	1996.07-2000.05		Front	Saloon RWD 604910	Inner diameter:32mm	Flexible Coupling Kit	537820S
	1996.07-2000.05		Front	Saloon RWD 604910	Inner diameter:41mm	Flexible Coupling Kit	537821S
	1996.07-2000.05		Front	Saloon RWD 604910	AT,not for taxis;Inner diameter:38.5mm,Bolt Hole Centres:80mm	Flexible Coupling Kit	538137S
	1996.07-2000.05		Rear	Saloon RWD 604910		Flexible Coupling Kit	510459S
	1996.07-2000.05		Rear	Saloon RWD 604910	Inner diameter:39mm,Bolt Hole Centres:90mm	Flexible Coupling Kit	510570S
2.2 (70 kw)	1993.06-1998.06		Centre	Saloon RWD 604910		Center Bearing Support	538669
	1993.06-1998.06		Front	Saloon RWD 604910		Flexible Coupling	510458
	1993.06-1998.06		Front	Saloon RWD 604910		Flexible Coupling	510569
	1993.06-1998.06		Front	Saloon RWD 604910		Flexible Coupling	517747
	1993.06-1998.06		Front	Saloon RWD 604910	MT,not for taxis	Flexible Coupling	538136
	1993.06-1998.06		Rear	Saloon RWD 604910		Flexible Coupling	510460
	1993.06-1998.06		Front	Saloon RWD 604910	Inner diameter:37mm,510434S and 510578S different structure	Flexible Coupling Kit	510434S
	1993.06-1998.06		Front	Saloon RWD 604910	Inner diameter:37mm,510578S and 510434S different structure	Flexible Coupling Kit	510578S
	1993.06-1998.06		Front	Saloon RWD 604910	Inner diameter:32mm	Flexible Coupling Kit	537791S
	1993.06-1998.06		Front	Saloon RWD 604910	Inner diameter:32mm	Flexible Coupling Kit	537820S
	1993.06-1998.06		Front	Saloon RWD 604910	Inner diameter:41mm	Flexible Coupling Kit	537821S
	1993.06-1998.06		Front	Saloon RWD 604910	AT,not for taxis;Inner diameter:38.5mm,Bolt Hole Centres:80mm	Flexible Coupling Kit	538137S
	1993.06-1998.06		Rear	Saloon RWD 604910		Flexible Coupling Kit	510459S
	1993.06-1998.06		Rear	Saloon RWD 604910	Inner diameter:39mm,Bolt Hole Centres:90mm	Flexible Coupling Kit	510570S
	1996.01-1998.05		Centre	Estate RWD 604910		Center Bearing Support	538669
	1996.01-1998.05		Front	Estate RWD 604910		Flexible Coupling	510569
	1996.01-1998.05		Front	Estate RWD 604910	Chassis no. from:F 702941,MT,not for taxis	Flexible Coupling	512326
	1996.01-1998.05		Front	Estate RWD 604910		Flexible Coupling	517747
	1996.01-1998.05		Rear	Estate RWD 604910		Flexible Coupling	510460
	1996.01-1998.05		Front	Estate RWD 604910		Flexible Coupling Kit	510578S
	1996.01-1998.05		Front	Estate RWD 604910		Flexible Coupling Kit	537791S
	1996.01-1998.05		Front	Estate RWD 604910	Chassis no. to:F 702940,MT,not for taxis	Flexible Coupling Kit	537820S
	1996.01-1998.05		Front	Estate RWD 604910	MT,for taxis	Flexible Coupling Kit	537821S
	1996.01-1998.05		Rear	Estate RWD 604910		Flexible Coupling Kit	510459S
	1996.01-1998.05		Front;Rear	Estate RWD 604910		Flexible Coupling Kit	510570S
2.2 (92 kw)	1996.02-2000.05		Centre	Saloon RWD 611960		Center Bearing Support	538666
	1996.02-2000.05		Front;Rear	Saloon RWD 611960		Flexible Coupling	510579
	1996.02-2000.05		Front	Saloon RWD 611960	Inner diameter:37mm	Flexible Coupling Kit	510434S
	1996.02-2000.05		Front	Saloon RWD 611960	Inner diameter:46.5mm	Flexible Coupling Kit	510580S
	1997.04-2000.10		Centre	Estate RWD 611960		Center Bearing Support	538666
	1997.04-2000.10		Front;Rear	Estate RWD 611960		Flexible Coupling	510579
	1997.04-2000.10		Front	Estate RWD 611960		Flexible Coupling Kit	510580S

	YEAR	TRANSM.	FITTING POSITION	BODY STYLE & DRIVE TYPE & ENGINE	REMARKS	PRODUCT	GSP Ref.
MERCEDES-BENZ **C220**							
2.2 (100 kw)	2000.05-2007.02		Centre	Saloon RWD 611962		Center Bearing Support	538639
	2000.05-2007.02		Front;Rear	Saloon RWD 611962		Flexible Coupling	512678
	2000.05-2007.02		Front;Rear	Saloon RWD 611962		Flexible Coupling Kit	512673S
	2001.03-2007.08		Front;Rear	Estate RWD 646963		Flexible Coupling	512677
	2001.03-2007.08		Front;Rear	Estate RWD 646963		Flexible Coupling Kit	512677S
	2001.03-2008.05		Centre	Coupe RWD 611962		Center Bearing Support	538639
	2001.03-2008.05		Front;Rear	Coupe RWD 611962		Flexible Coupling	512678
	2001.03-2008.05		Front;Rear	Coupe RWD 611962		Flexible Coupling Kit	512673S
2.2 (105 kw)	2000.06-2004.12		Centre	Saloon RWD 611962/646963		Center Bearing Support	538639
	2000.06-2004.12		Front;Rear	Saloon RWD 611962/646963	Engine Code:OM 646.963	Flexible Coupling	512677
	2000.06-2004.12		Front;Rear	Saloon RWD 611962/646963	Engine Code:OM 611.962	Flexible Coupling	512678
	2000.06-2004.12		Front;Rear	Saloon RWD 611962/646963		Flexible Coupling Kit	512673S
	2001.03-2004.03		Centre	Coupe RWD 611962		Center Bearing Support	538639
	2001.03-2004.03		Front;Rear	Coupe RWD 611962		Flexible Coupling	512678
	2001.03-2004.03		Front;Rear	Coupe RWD 611962		Flexible Coupling Kit	512673S
	2001.03-2007.08		Centre	Estate RWD 611962/646963		Center Bearing Support	538639
	2001.03-2007.08		Front;Rear	Estate RWD 611962/646963		Flexible Coupling	512678
	2001.03-2007.08		Front;Rear	Estate RWD 611962/646963		Flexible Coupling Kit	512673S
	2001.03-2007.08		Front;Rear	Estate RWD 611962/646963		Flexible Coupling Kit	512678S
2.2 (110 kw)	1993.06-2000.05		Centre	Saloon RWD 111961		Center Bearing Support	538669
	1993.06-2000.05		Front	Saloon RWD 111961		Flexible Coupling	510569
	1993.06-2000.05		Front	Saloon RWD 111961	AT	Flexible Coupling	512326
	1993.06-2000.05		Front	Saloon RWD 111961	Inner diameter:37mm,510434S and 510578S different structure	Flexible Coupling Kit	510434S
	1993.06-2000.05		Front	Saloon RWD 111961	Inner diameter:37mm,510578S and 510434S different structure	Flexible Coupling Kit	510578S
	1993.06-2000.05		Front	Saloon RWD 111961	Inner diameter:41mm	Flexible Coupling Kit	537821S
	1993.06-2000.05		Rear	Saloon RWD 111961	Inner diameter:39mm	Flexible Coupling Kit	510570S
	2003.04-2007.02		Centre	Saloon RWD 646963		Center Bearing Support	538639
	2003.04-2007.02		Front;Rear	Saloon RWD 646963		Flexible Coupling	512677
	2003.04-2007.02		Front;Rear	Saloon RWD 646963		Flexible Coupling Kit	512677S
	2003.04-2007.02		Front;Rear	Saloon RWD 646963		Flexible Coupling Kit	537794S
	2003.08-2007.10		Centre	Estate RWD 646963		Center Bearing Support	538639
	2003.08-2007.10		Front;Rear	Estate RWD 646963		Flexible Coupling	512677
	2003.08-2007.10		Front;Rear	Estate RWD 646963		Flexible Coupling Kit	512677S
	2003.08-2007.10		Front;Rear	Estate RWD 646963		Flexible Coupling Kit	537794S
	2004.02-2008.01		Centre	Coupe RWD 646963		Center Bearing Support	538639
	2004.02-2008.01		Front;Rear	Coupe RWD 646963		Flexible Coupling	512677
	2004.02-2008.01		Front;Rear	Coupe RWD 646963		Flexible Coupling Kit	512677S
	2004.02-2008.01		Front;Rear	Coupe RWD 646963		Flexible Coupling Kit	537794S
2.2 (120 kw)	2007.04-2008.11		Centre	Saloon RWD 646811		Center Bearing Support	538668
	2007.04-2008.11		Front;Rear	Saloon RWD 646811	5AT;6MT	Flexible Coupling	512677
	2007.04-2008.11		Front;Rear	Saloon RWD 646811		Flexible Coupling Kit	512677S
	2007.04-2008.11		Front;Rear	Saloon RWD 646811	5AT;6MT	Flexible Coupling Kit	537794S
	2007.08-2008.11		Centre	Estate RWD 646811		Center Bearing Support	538668
	2007.08-2008.11		Front;Rear	Estate RWD 646811	5AT;6MT	Flexible Coupling	512677
	2007.08-2008.11		Rear	Estate RWD 646811		Flexible Coupling Kit	537793S
	2007.08-2008.11		Front;Rear	Estate RWD 646811		Flexible Coupling Kit	512677S
	2007.08-2008.11		Front;Rear	Estate RWD 646811	5AT;6MT	Flexible Coupling Kit	537794S
	2008.12-2014.01		Centre	Saloon RWD 651911		Center Bearing Support	539927
	2008.12-2014.01		Centre	Estate RWD 651911		Center Bearing Support	539927
	2008.12-2014.01		Rear	Saloon RWD 651911		Flexible Coupling	537843
	2008.12-2014.01		Front;Rear	Saloon RWD 651911	5AT;6MT;7AT	Flexible Coupling	512677
	2008.12-2014.01		Front;Rear	Estate RWD 651911	5AT;6MT;7AT	Flexible Coupling	512677
	2008.12-2014.01		Front	Saloon RWD 651911	5AT;6MT;7AT	Flexible Coupling Kit	537794S
	2008.12-2014.01		Front	Estate RWD 651911	5AT;6MT;7AT	Flexible Coupling Kit	537794S
	2008.12-2014.01		Rear	Saloon RWD 651911		Flexible Coupling Kit	537843S
	2008.12-2014.01		Front;Rear	Saloon RWD 651911		Flexible Coupling Kit	512677S
	2008.12-2014.01		Front;Rear	Estate RWD 651911		Flexible Coupling Kit	512677S
	2011.06-2014.01		Centre	Coupe RWD 651911		Center Bearing Support	539927
	2011.06-2014.01		Front;Rear	Coupe RWD 651911	6MT;7AT	Flexible Coupling	512677
	2011.06-2014.01		Front;Rear	Coupe RWD 651911		Flexible Coupling Kit	512677S
	2011.06-2014.01		Front;Rear	Coupe RWD 651911	6MT;7AT	Flexible Coupling Kit	537794S
	2013.12-2016.05	AT	Rear	Saloon RWD 651921		Propshaft	PS900571
	2013.12-2016.05		Centre	Saloon RWD 651921		Center Bearing Support	538622
	2013.12-2016.05		Front	Saloon RWD 651921	5AT,9AT,6MT	Flexible Coupling	537630

	YEAR	TRANSM.	FITTING POSITION	BODY STYLE & DRIVE TYPE & ENGINE	REMARKS	PRODUCT	GSP Ref.
MERCEDES-BENZ **C220**							
2.2 (120 kw)	2013.12-2016.05		Front	Saloon RWD 651921	7AT	Flexible Coupling	538501
	2013.12-2016.05		Front;Rear	Saloon RWD 651921		Flexible Coupling	512677
	2013.12-2016.05		Front	Saloon RWD 651921	6MT;9AT	Flexible Coupling Kit	537630S
	2013.12-2016.05		Front	Saloon RWD 651921	7AT	Flexible Coupling Kit	538501S
	2013.12-2016.05		Front;Rear	Saloon RWD 651921	7AT	Flexible Coupling Kit	512677S
	2014.09-2018.05		Centre	Estate RWD 651921		Center Bearing Support	538622
	2014.09-2018.05		Front	Estate RWD 651921		Flexible Coupling	537630
	2014.09-2018.05		Front;Rear	Estate RWD 651921	Inner diameter:57.5mm	Flexible Coupling	512677
	2014.09-2018.05		Front;Rear	Estate RWD 651921	Inner diameter:58mm	Flexible Coupling	538501
	2014.09-2018.05		Front;Rear	Estate RWD 651921	6MT;7AT,Inner diameter:57.5mm	Flexible Coupling Kit	512677S
	2014.09-2018.05		Front;Rear	Estate RWD 651921	6MT,9AT	Flexible Coupling Kit	537630S
	2014.09-2018.05		Front;Rear	Estate RWD 651921	6MT,7AT,Inner diameter:58mm	Flexible Coupling Kit	538501S
	2015.10-2018.05		Centre	Coupe RWD 651921		Center Bearing Support	538622
	2015.10-2018.05		Front;Rear	Coupe RWD 651921		Flexible Coupling Kit	537630S
	2016.06-2018.05		Centre	Cabriolet RWD 651921		Center Bearing Support	538622
	2016.06-2018.05		Front	Cabriolet RWD 651921		Flexible Coupling	537630
	2016.06-2018.05		Front;Rear	Cabriolet RWD 651921		Flexible Coupling Kit	537630S
2.2 (125 kw)	2007.01-2014.01		Centre	Saloon RWD 646811		Center Bearing Support	538668
	2007.01-2014.01		Front	Saloon RWD 646811		Flexible Coupling	512672
	2007.01-2014.01		Front;Rear	Saloon RWD 646811	5AT;6MT	Flexible Coupling	512677
	2007.01-2014.01		Rear	Saloon RWD 646811		Flexible Coupling Kit	537793S
	2007.01-2014.01		Front;Rear	Saloon RWD 646811		Flexible Coupling Kit	512677S
	2007.01-2014.01		Front;Rear	Saloon RWD 646811	5AT;6MT	Flexible Coupling Kit	537794S
	2007.11-2008.11		Centre	Estate RWD 646811		Center Bearing Support	538668
	2007.11-2008.11		Front	Estate RWD 646811		Flexible Coupling	512672
	2007.11-2008.11		Front;Rear	Estate RWD 646811	5AT;6MT	Flexible Coupling	512677
	2007.11-2008.11		Rear	Estate RWD 646811		Flexible Coupling Kit	537793S
	2007.11-2008.11		Front;Rear	Estate RWD 646811		Flexible Coupling Kit	512677S
	2007.11-2008.11		Front;Rear	Estate RWD 646811	5AT;6MT	Flexible Coupling Kit	537794S
	2008.12-2014.01		Centre	Saloon RWD 651911		Center Bearing Support	539927
	2008.12-2014.01		Centre	Estate RWD 651911		Center Bearing Support	539927
	2008.12-2014.01		Rear	Saloon RWD 651911		Flexible Coupling	537843
	2008.12-2014.01		Front;Rear	Saloon RWD 651911	5AT;6MT;7AT	Flexible Coupling	512677
	2008.12-2014.01		Front;Rear	Estate RWD 651911	5AT;6MT;7AT	Flexible Coupling	512677
	2008.12-2014.01		Front	Saloon RWD 651911	5AT;6MT;7AT	Flexible Coupling Kit	537794S
	2008.12-2014.01		Front	Estate RWD 651911	5AT;6MT;7AT	Flexible Coupling Kit	537794S
	2008.12-2014.01		Rear	Saloon RWD 651911		Flexible Coupling Kit	537843S
	2008.12-2014.01		Front;Rear	Saloon RWD 651911		Flexible Coupling Kit	512677S
	2008.12-2014.01		Front;Rear	Estate RWD 651911		Flexible Coupling Kit	512677S
	2011.06-2014.01		Centre	Coupe RWD 651911		Center Bearing Support	539927
	2011.06-2014.01		Front;Rear	Coupe RWD 651911	6MT;7AT	Flexible Coupling	512677
	2011.06-2014.01		Front;Rear	Coupe RWD 651911		Flexible Coupling Kit	512677S
	2011.06-2014.01		Front;Rear	Coupe RWD 651911	6MT;7AT	Flexible Coupling Kit	537794S
	2013.02-2014.01	7AT	Front	Saloon 4WD 651912		Propshaft	PS901588
	2013.02-2014.01		Centre	Saloon 4WD 651912	AT	Center Bearing Support	538668
	2013.02-2014.01		Front;Rear	Saloon 4WD 651912		Flexible Coupling	512678
	2013.02-2014.01		Front;Rear	Saloon 4WD 651912		Flexible Coupling Kit	512673S
	2013.05-2014.01	7AT	Front	Estate 4WD 651912		Propshaft	PS901588
	2013.05-2014.01		Centre	Estate 4WD 651912	AT	Center Bearing Support	538668
	2013.05-2014.01		Front;Rear	Estate 4WD 651912		Flexible Coupling	512678
	2013.05-2014.01		Front;Rear	Estate 4WD 651912		Flexible Coupling Kit	512673S
	2013.12-2018.05	AT	Rear	Saloon RWD 651921		Propshaft	PS900571
	2013.12-2018.05		Centre	Saloon RWD 651921		Center Bearing Support	538622
	2013.12-2018.05		Front	Saloon RWD 651921	5AT,9AT,6MT	Flexible Coupling	537630
	2013.12-2018.05		Front	Saloon RWD 651921	7AT	Flexible Coupling	538501
	2013.12-2018.05		Front;Rear	Saloon RWD 651921		Flexible Coupling	512677
	2013.12-2018.05		Front	Saloon RWD 651921	6MT;9AT	Flexible Coupling Kit	537630S
	2013.12-2018.05		Front	Saloon RWD 651921	7AT	Flexible Coupling Kit	538501S
	2013.12-2018.05		Front;Rear	Saloon RWD 651921	7AT	Flexible Coupling Kit	512677S
	2014.09-2018.05		Centre	Estate RWD 651921		Center Bearing Support	538622
	2014.09-2018.05		Front	Estate RWD 651921		Flexible Coupling	537630
	2014.09-2018.05		Front;Rear	Estate RWD 651921	Inner diameter:57.5mm	Flexible Coupling	512677
	2014.09-2018.05		Front;Rear	Estate RWD 651921	Inner diameter:58mm	Flexible Coupling	538501
	2014.09-2018.05		Front;Rear	Estate RWD 651921	6MT;7AT,Inner diameter:57.5mm	Flexible Coupling Kit	512677S

	YEAR	TRANSM.	FITTING POSITION	BODY STYLE & DRIVE TYPE & ENGINE	REMARKS	PRODUCT	GSP Ref.
MERCEDES-BENZ							
C220							
2.2 (125 kw)	2014.09-2018.05		Front;Rear	Estate RWD 651921	6MT,9AT	Flexible Coupling Kit	537630S
	2014.09-2018.05		Front;Rear	Estate RWD 651921	6MT,7AT,Inner diameter:58mm	Flexible Coupling Kit	538501S
	2015.04-2018.05	7AT	Front	Saloon 4WD 651921		Propshaft	PS901588
	2015.04-2018.05	7AT	Front	Estate 4WD 651921		Propshaft	PS901588
	2015.04-2018.05		Front;Rear	Saloon 4WD 651921	7AT	Flexible Coupling	512678
	2015.04-2018.05		Front;Rear	Estate 4WD 651921	7AT	Flexible Coupling	512678
	2015.04-2018.05		Front;Rear	Saloon 4WD 651921	9AT	Flexible Coupling	537627
	2015.04-2018.05		Front;Rear	Estate 4WD 651921	7AT;9AT	Flexible Coupling	537627
	2015.04-2018.05		Front;Rear	Saloon 4WD 651921	Inner diameter:50mm	Flexible Coupling Kit	512673S
	2015.04-2018.05		Front;Rear	Estate 4WD 651921	Inner diameter:50mm	Flexible Coupling Kit	512673S
	2015.04-2018.05		Front;Rear	Saloon 4WD 651921	Inner diameter:48.5mm	Flexible Coupling Kit	537627S
	2015.04-2018.05		Front;Rear	Estate 4WD 651921	Inner diameter:48.5mm	Flexible Coupling Kit	537627S
	2015.10-2018.05		Centre	Coupe RWD 651921		Center Bearing Support	538622
	2015.10-2018.05		Front;Rear	Coupe RWD 651921		Flexible Coupling Kit	537630S
	2016.04-2018.05	7AT	Front	Coupe 4WD 651921		Propshaft	PS901588
	2016.04-2018.05		Front;Rear	Coupe 4WD 651921		Flexible Coupling	537627
	2016.04-2018.05		Front;Rear	Coupe 4WD 651921	9AT	Flexible Coupling Kit	537627S
	2016.06-2018.05	7AT	Front	Cabriolet 4WD 651921		Propshaft	PS901588
	2016.06-2018.05		Centre	Cabriolet RWD 651921		Center Bearing Support	538622
	2016.06-2018.05		Front	Cabriolet RWD 651921		Flexible Coupling	537630
	2016.06-2018.05		Front;Rear	Cabriolet 4WD 651921		Flexible Coupling	537627
	2016.06-2018.05		Front;Rear	Cabriolet 4WD 651921		Flexible Coupling Kit	537627S
	2016.06-2018.05		Front;Rear	Cabriolet RWD 651921		Flexible Coupling Kit	537630S
C230							
1.8 (120 kw)	2002.06-2005.04		Front;Rear	Coupe RWD 271948		Flexible Coupling	512678
	2002.06-2005.04		Front	Coupe RWD 271948		Flexible Coupling Kit	537797S
1.8 (141 kw)	2002.05-2008.05		Centre	Coupe RWD 271948	with bearing	Center Bearing Support	538639
	2002.05-2008.05		Front;Rear	Coupe RWD 271948		Flexible Coupling	512678
	2002.05-2008.05		Front;Rear	Coupe RWD 271948		Flexible Coupling Kit	512673S
	2003.11-2005.07		Centre	Estate RWD 271948	with bearing	Center Bearing Support	538639
	2003.11-2005.07		Front;Rear	Estate RWD 271948		Flexible Coupling	512678
	2003.11-2005.07		Front;Rear	Estate RWD 271948		Flexible Coupling Kit	512673S
	2004.02-2007.02		Centre	Saloon RWD 271948	with bearing	Center Bearing Support	538639
	2004.02-2007.02		Front;Rear	Saloon RWD 271948		Flexible Coupling	512678
	2004.02-2007.02		Front;Rear	Saloon RWD 271948		Flexible Coupling Kit	512673S
2.3 (110 kw)	1995.09-1997.06		Centre	Saloon RWD 111974		Center Bearing Support	538669
	1995.09-1997.06		Front	Saloon RWD 111974		Flexible Coupling	510569
	1995.09-1997.06		Front	Saloon RWD 111974	Inner diameter:37mm	Flexible Coupling Kit	510434S
	1995.09-1997.06		Front	Saloon RWD 111974	MT;Inner diameter:41mm	Flexible Coupling Kit	537821S
	1995.09-1997.06		Front;Rear	Saloon RWD 111974	Inner diameter:39mm	Flexible Coupling Kit	510570S
	1996.01-1998.06		Centre	Estate RWD 111974		Center Bearing Support	538669
	1996.01-1998.06		Front	Estate RWD 111974		Flexible Coupling	510569
	1996.01-1998.06		Front	Estate RWD 111974	MT	Flexible Coupling Kit	537821S
	1996.01-1998.06		Front;Rear	Estate RWD 111974		Flexible Coupling Kit	510570S
2.3 (142 kw)	1995.09-2000.05		Centre	Saloon RWD 111975		Center Bearing Support	538666
	1995.09-2000.05		Front	Saloon RWD 111975		Flexible Coupling	510571
	1995.09-2000.05		Front;Rear	Saloon RWD 111975		Flexible Coupling	510579
	1995.09-2000.05		Front	Saloon RWD 111975	Inner diameter:37mm	Flexible Coupling Kit	510434S
	1995.09-2000.05		Front	Saloon RWD 111975	Inner diameter:42mm	Flexible Coupling Kit	510571S
	1995.09-2000.05		Front	Saloon RWD 111975	Inner diameter:46.5mm	Flexible Coupling Kit	510580S
	1997.04-1999.10		Centre	Estate RWD 111975		Center Bearing Support	538666
	1997.04-1999.10		Front	Estate RWD 111975		Flexible Coupling	510571
	1997.04-1999.10		Front;Rear	Estate RWD 111975		Flexible Coupling	510579
	1997.04-1999.10		Front	Estate RWD 111975		Flexible Coupling Kit	510571S
	1997.04-1999.10		Front	Estate RWD 111975		Flexible Coupling Kit	510580S
2.3 (145 kw)	2001.03-2002.05		Centre	Coupe RWD 111981		Center Bearing Support	538639
	2001.03-2002.05		Front	Coupe RWD 111981	538111 and 512678 different structure	Flexible Coupling	538111
	2001.03-2002.05		Front;Rear	Coupe RWD 111981		Flexible Coupling	512678
	2001.03-2002.05		Front	Coupe RWD 111981		Flexible Coupling Kit	537797S
	2001.03-2002.05		Front;Rear	Coupe RWD 111981		Flexible Coupling Kit	512673S
2.5 (150 kw)	2005.03-2007.11		Centre	Estate RWD 272920	with bearing	Center Bearing Support	538639
	2005.03-2007.11		Front;Rear	Estate RWD 272920		Flexible Coupling	512678
	2005.03-2007.11		Front;Rear	Estate RWD 272920		Flexible Coupling Kit	512673S
	2005.03-2007.12		Centre	Saloon RWD 272920	with bearing	Center Bearing Support	538639

	YEAR	TRANSM.	FITTING POSITION	BODY STYLE & DRIVE TYPE & ENGINE	REMARKS	PRODUCT	GSP Ref.
MERCEDES-BENZ							
C230							
2.5 (150 kw)	2005.03-2007.12		Front;Rear	Saloon RWD 272920		Flexible Coupling	512678
	2005.03-2007.12		Front;Rear	Saloon RWD 272920		Flexible Coupling Kit	512673S
	2005.03-2008.01		Centre	Coupe RWD 272920	with bearing	Center Bearing Support	538639
	2005.03-2008.01		Front;Rear	Coupe RWD 272920		Flexible Coupling	512678
	2005.03-2008.01		Front;Rear	Coupe RWD 272920		Flexible Coupling Kit	512673S
	2007.02-2014.01		Centre	Saloon RWD 272921		Center Bearing Support	538668
	2007.02-2014.01		Front;Rear	Saloon RWD 272921		Flexible Coupling	512678
	2007.02-2014.01		Front;Rear	Saloon RWD 272921		Flexible Coupling Kit	512673S
	2007.05-2010.12		Centre	Saloon 4WD 272911		Center Bearing Support	538668
	2007.05-2010.12		Front;Rear	Saloon 4WD 272911		Flexible Coupling	512678
	2007.05-2010.12		Front;Rear	Saloon 4WD 272911		Flexible Coupling Kit	512673S
	2007.11-2010.12		Centre	Estate RWD 272921		Center Bearing Support	538668
	2007.11-2010.12		Front;Rear	Estate RWD 272921		Flexible Coupling	512678
	2007.11-2010.12		Front;Rear	Estate RWD 272921		Flexible Coupling Kit	512673S
C240							
2.4 (125 kw)	1995.09-2000.05		Centre	Saloon RWD 112910		Center Bearing Support	538666
	1995.09-2000.05		Front	Saloon RWD 112910		Flexible Coupling	510569
	1995.09-2000.05		Front	Saloon RWD 112910	Inner diameter:37mm	Flexible Coupling Kit	510434S
	1995.09-2000.05		Front	Saloon RWD 112910	MT;Inner diameter:41mm	Flexible Coupling Kit	537821S
	1995.09-2000.05		Front;Rear	Saloon RWD 112910	Inner diameter:39mm	Flexible Coupling Kit	510570S
	1997.04-2000.10		Centre	Estate RWD 112910		Center Bearing Support	538666
	1997.04-2000.10		Front	Estate RWD 112910		Flexible Coupling	510569
	1997.04-2000.10		Front	Estate RWD 112910	MT	Flexible Coupling Kit	537821S
	1997.04-2000.10		Front;Rear	Estate RWD 112910		Flexible Coupling Kit	510570S
	1997.04-2000.10		Front;Rear	Estate RWD 112910		Flexible Coupling Kit	510579S
2.6 (125 kw)	2000.01-2005.07		Centre	Saloon RWD 112912		Center Bearing Support	538639
	2000.01-2005.07		Front	Saloon RWD 112912	not for 5AT	Flexible Coupling	538111
	2000.01-2005.07		Front;Rear	Saloon RWD 112912		Flexible Coupling	512678
	2000.01-2005.07		Front	Saloon RWD 112912		Flexible Coupling Kit	537797S
	2000.01-2005.07		Front;Rear	Saloon RWD 112912		Flexible Coupling Kit	512673S
	2000.01-2005.07		Front;Rear	Saloon RWD 112912		Flexible Coupling Kit	512678S
	2000.09-2001.03		Centre	Estate RWD 112915		Center Bearing Support	538666
	2000.09-2001.03		Front;Rear	Estate RWD 112915		Flexible Coupling	512678
	2000.09-2001.03		Front;Rear	Estate RWD 112915		Flexible Coupling Kit	512673S
	2000.11-2005.12		Centre	Estate RWD 112912	with bearing	Center Bearing Support	538639
	2000.11-2005.12		Front	Estate RWD 112912	not for 5AT	Flexible Coupling	538111
	2000.11-2005.12		Front;Rear	Estate RWD 112912	5AT	Flexible Coupling	512678
	2000.11-2005.12		Front	Estate RWD 112912		Flexible Coupling Kit	537797S
	2000.11-2005.12		Front;Rear	Estate RWD 112912		Flexible Coupling Kit	512673S
	2000.11-2005.12		Front;Rear	Estate RWD 112912		Flexible Coupling Kit	512678S
	2002.08-2005.12	AT	Front	Saloon 4WD 112916	Model year from:2003,Model year to:2005	Propshaft	PS900346
	2002.08-2005.12		Centre	Saloon 4WD 112916	with bearing	Center Bearing Support	538639
	2002.08-2005.12		Centre	Estate 4WD 112916	with bearing	Center Bearing Support	538639
	2002.08-2005.12		Front;Rear	Saloon 4WD 112916	Bolt Hole Centres:100mm	Flexible Coupling	512678
	2002.08-2005.12		Front;Rear	Estate 4WD 112916	Bolt Hole Centres:100mm	Flexible Coupling	512678
	2002.08-2005.12		Front;Rear	Saloon 4WD 112916	Bolt Hole Centres:90mm	Flexible Coupling	533419
	2002.08-2005.12		Front;Rear	Estate 4WD 112916	Bolt Hole Centres:90mm	Flexible Coupling	533419
	2002.08-2005.12		Front;Rear	Saloon 4WD 112916	Bolt Hole Centres:120mm	Flexible Coupling	533884
	2002.08-2005.12		Front;Rear	Estate 4WD 112916	Bolt Hole Centres:120mm	Flexible Coupling	533884
	2002.08-2005.12		Front	Saloon 4WD 112916		Flexible Coupling Kit	537797S
	2002.08-2005.12		Front	Estate 4WD 112916		Flexible Coupling Kit	537797S
	2002.08-2005.12		Front;Rear	Saloon 4WD 112916		Flexible Coupling Kit	512673S
	2002.08-2005.12		Front;Rear	Estate 4WD 112916		Flexible Coupling Kit	512673S
C250							
1.8 (150 kw)	2009.05-2014.01		Centre	Saloon RWD 271860		Center Bearing Support	538668
	2009.05-2014.01		Centre	Estate RWD 271860		Center Bearing Support	538668
	2009.05-2014.01		Front;Rear	Saloon RWD 271860	7AT	Flexible Coupling	512677
	2009.05-2014.01		Front;Rear	Estate RWD 271860		Flexible Coupling	512677
	2009.05-2014.01		Front;Rear	Saloon RWD 271860		Flexible Coupling Kit	512673S
	2009.05-2014.01		Front;Rear	Saloon RWD 271860		Flexible Coupling Kit	512677S
	2009.05-2014.01		Front;Rear	Estate RWD 271860		Flexible Coupling Kit	512677S
	2009.05-2014.01		Front;Rear	Saloon RWD 271860	7AT	Flexible Coupling Kit	537794S
	2009.05-2014.01		Front;Rear	Estate RWD 271860		Flexible Coupling Kit	537794S
	2011.03-2014.01		Centre	Coupe RWD 271860		Center Bearing Support	538668

	YEAR	TRANSM.	FITTING POSITION	BODY STYLE & DRIVE TYPE & ENGINE	REMARKS	PRODUCT	GSP Ref.
MERCEDES-BENZ **C250**							
1.8 (150 kw)	2011.03-2014.01		Front;Rear	Coupe RWD 271860	7AT	Flexible Coupling	512677
	2011.03-2014.01		Front;Rear	Coupe RWD 271860		Flexible Coupling Kit	512677S
	2011.03-2014.01		Front;Rear	Coupe RWD 271860	7AT	Flexible Coupling Kit	537794S
2.0 (155 kw)	2014.03-2018.05		Centre	Saloon RWD 274920		Center Bearing Support	538622
	2014.03-2018.05		Front;Rear	Saloon RWD 274920		Flexible Coupling	538510
	2014.09-2018.05		Centre	Estate RWD 274920		Center Bearing Support	538622
	2014.09-2018.05		Front	Estate RWD 274920	7AT	Flexible Coupling	538502
	2014.09-2018.05		Front;Rear	Estate RWD 274920		Flexible Coupling	538510
	2015.10-2018.05		Centre	Coupe RWD 274920		Center Bearing Support	538622
	2015.10-2018.05		Front	Coupe RWD 274920	7AT	Flexible Coupling	538502
	2015.10-2018.05		Front;Rear	Coupe RWD 274920		Flexible Coupling	538510
	2016.06-2018.05		Centre	Cabriolet RWD 274920		Center Bearing Support	538622
	2016.06-2018.05		Front	Cabriolet RWD 274920	7AT	Flexible Coupling	538502
	2016.06-2018.05		Front;Rear	Cabriolet RWD 274920		Flexible Coupling	538510
2.2 (150 kw)	2008.08-2014.01		Rear	Saloon RWD 651911		Flexible Coupling	537843
	2008.08-2014.01		Front;Rear	Saloon RWD 651911		Flexible Coupling	533884
	2008.08-2014.01		Rear	Saloon RWD 651911		Flexible Coupling Kit	533884S
	2008.08-2014.01		Rear	Saloon RWD 651911		Flexible Coupling Kit	537843S
	2008.08-2014.01		Front;Rear	Saloon RWD 651911		Flexible Coupling Kit	537832S
	2009.05-2014.01	AT	Front	Saloon 4WD 651912		Propshaft	PS901589
	2009.05-2014.01		Centre	Saloon 4WD 651912	AT	Center Bearing Support	538668
	2009.05-2014.01		Rear	Estate RWD 651911		Flexible Coupling	537843
	2009.05-2014.01		Front;Rear	Saloon 4WD 651912		Flexible Coupling	512678
	2009.05-2014.01		Front;Rear	Estate RWD 651911		Flexible Coupling	533884
	2009.05-2014.01		Rear	Estate RWD 651911		Flexible Coupling Kit	533884S
	2009.05-2014.01		Rear	Estate RWD 651911		Flexible Coupling Kit	537843S
	2009.05-2014.01		Front;Rear	Saloon 4WD 651912		Flexible Coupling Kit	512673S
	2009.05-2014.01		Front;Rear	Estate RWD 651911		Flexible Coupling Kit	537832S
	2010.04-2014.01	AT	Front	Estate 4WD 651912		Propshaft	PS901589
	2010.04-2014.01		Centre	Estate 4WD 651912		Center Bearing Support	538668
	2010.04-2014.01		Front;Rear	Estate 4WD 651912		Flexible Coupling	512678
	2010.04-2014.01		Front;Rear	Estate 4WD 651912		Flexible Coupling Kit	512673S
	2011.06-2014.01		Front;Rear	Coupe RWD 651911		Flexible Coupling Kit	537832S
	2014.02-2018.05	7AT	Front	Saloon 4WD 651921		Propshaft	PS901588
	2014.02-2018.05		Centre	Saloon RWD 651921		Center Bearing Support	538622
	2014.02-2018.05		Front;Rear	Saloon 4WD 651921	7AT	Flexible Coupling	512678
	2014.02-2018.05		Front;Rear	Saloon RWD 651921	7AT	Flexible Coupling	533884
	2014.02-2018.05		Front;Rear	Saloon 4WD 651921	7AT;9AT	Flexible Coupling	537627
	2014.02-2018.05		Front;Rear	Saloon RWD 651921		Flexible Coupling	537851
	2014.02-2018.05		Front;Rear	Saloon 4WD 651921	Inner diameter:50mm	Flexible Coupling Kit	512673S
	2014.02-2018.05		Front;Rear	Saloon 4WD 651921	Inner diameter:48.5mm	Flexible Coupling Kit	537627S
	2014.02-2018.05		Front;Rear	Saloon RWD 651921		Flexible Coupling Kit	537851S
	2014.09-2018.05		Centre	Estate RWD 651921		Center Bearing Support	538622
	2014.09-2018.05		Front;Rear	Estate RWD 651921	7AT	Flexible Coupling	533884
	2014.09-2018.05		Front;Rear	Estate RWD 651921		Flexible Coupling	537851
	2014.09-2018.05		Front;Rear	Estate RWD 651921		Flexible Coupling Kit	537851S
	2014.10-2018.05	7AT	Front	Estate 4WD 651921		Propshaft	PS901588
	2014.10-2018.05		Front	Estate 4WD 651921		Flexible Coupling	512678
	2014.10-2018.05		Front;Rear	Estate 4WD 651921	7AT	Flexible Coupling	533884
	2014.10-2018.05		Front;Rear	Estate 4WD 651921	9AT	Flexible Coupling	537627
	2014.10-2018.05		Front;Rear	Estate 4WD 651921	Inner diameter:50mm	Flexible Coupling Kit	512673S
	2014.10-2018.05		Front;Rear	Estate 4WD 651921	Inner diameter:48.5mm	Flexible Coupling Kit	537627S
	2015.10-2018.05		Centre	Coupe RWD 651921		Center Bearing Support	538622
	2015.10-2018.05		Front;Rear	Coupe RWD 651921		Flexible Coupling	537851
	2015.10-2018.05		Front;Rear	Coupe RWD 651921		Flexible Coupling Kit	537851S
	2016.04-2018.05	7AT	Front	Coupe 4WD 651921		Propshaft	PS901588
	2016.04-2018.05		Front;Rear	Coupe 4WD 651921		Flexible Coupling	537627
	2016.04-2018.05		Front;Rear	Coupe 4WD 651921	9AT	Flexible Coupling Kit	537627S
	2016.06-2018.05		Centre	Cabriolet RWD 651921		Center Bearing Support	538622
	2016.06-2018.05		Front;Rear	Cabriolet RWD 651921		Flexible Coupling	537851
	2016.06-2018.05		Front;Rear	Cabriolet RWD 651921		Flexible Coupling Kit	537851S
2.5 (83 kw)	1993.06-2000.05		Centre	Saloon RWD 605910		Center Bearing Support	538669
	1993.06-2000.05		Front	Saloon RWD 605910		Flexible Coupling	510569
	1993.06-2000.05		Front	Saloon RWD 605910	Inner diameter:37mm	Flexible Coupling Kit	510434S

	YEAR	TRANSM.	FITTING POSITION	BODY STYLE & DRIVE TYPE & ENGINE	REMARKS	PRODUCT	GSP Ref.
MERCEDES-BENZ							
C250							
2.5 (83 kw)	1993.06-2000.05		Front;Rear	Saloon RWD 605910	Inner diameter:39mm	Flexible Coupling Kit	510570S
2.5 (110 kw)	1995.09-2000.05		Centre	Saloon RWD 605960		Center Bearing Support	538666
	1995.09-2000.05		Front	Saloon RWD 605960		Flexible Coupling	510571
	1995.09-2000.05		Front;Rear	Saloon RWD 605960		Flexible Coupling	510579
	1995.09-2000.05		Front	Saloon RWD 605960	Inner diameter:37mm	Flexible Coupling Kit	510434S
	1995.09-2000.05		Front	Saloon RWD 605960	Inner diameter:42mm	Flexible Coupling Kit	510571S
	1995.09-2000.05		Front	Saloon RWD 605960	Inner diameter:46.5mm	Flexible Coupling Kit	510580S
	1995.09-2000.05		Front	Saloon RWD 605960	Inner diameter:42mm	Flexible Coupling Kit	537850S
	1996.02-2000.10		Centre	Estate RWD 605960		Center Bearing Support	538666
	1996.02-2000.10		Front	Estate RWD 605960		Flexible Coupling	510571
	1996.02-2000.10		Front;Rear	Estate RWD 605960		Flexible Coupling	510579
	1996.02-2000.10		Front	Estate RWD 605960	MT,Chassis no. to:F 519818	Flexible Coupling Kit	510571S
	1996.02-2000.10		Front	Estate RWD 605960	Chassis no. from:F 519819,MT	Flexible Coupling Kit	510580S
	1996.02-2000.10		Front	Estate RWD 605960	Chassis no. to:519818,MT	Flexible Coupling Kit	537850S
2.5 (150 kw)	2008.02-2012.12		Centre	Estate RWD 272921		Center Bearing Support	538668
	2008.02-2012.12		Front;Rear	Estate RWD 272921		Flexible Coupling	512678
	2008.02-2012.12		Front;Rear	Estate RWD 272921		Flexible Coupling Kit	512673S
	2008.02-2014.01		Centre	Saloon RWD 272921		Center Bearing Support	538668
	2008.02-2014.01		Front;Rear	Saloon RWD 272921		Flexible Coupling	512678
	2008.02-2014.01		Front;Rear	Saloon RWD 272921		Flexible Coupling Kit	512673S
C270							
2.7 (120 kw)	2000.12-2004.12		Front;Rear	Saloon RWD 612962		Flexible Coupling	512677
	2000.12-2004.12		Front;Rear	Saloon RWD 612962		Flexible Coupling Kit	512677S
	2001.03-2005.09		Front;Rear	Estate RWD 612962		Flexible Coupling	512677
	2001.03-2005.09		Front;Rear	Estate RWD 612962		Flexible Coupling Kit	512677S
2.7 (125 kw)	2000.06-2004.12		Front;Rear	Saloon RWD 612962		Flexible Coupling	512677
	2000.06-2004.12		Front;Rear	Saloon RWD 612962		Flexible Coupling Kit	512677S
	2000.06-2004.12		Front;Rear	Saloon RWD 612962		Flexible Coupling Kit	537794S
	2000.11-2004.12		Front;Rear	Estate RWD 612962		Flexible Coupling	512677
	2000.11-2004.12		Front;Rear	Estate RWD 612962		Flexible Coupling Kit	512677S
	2000.11-2004.12		Front;Rear	Estate RWD 612962		Flexible Coupling Kit	537794S
C280							
2.8 (142 kw)	1993.06-2000.05		Centre	Saloon RWD 104941		Center Bearing Support	538666
	1993.06-2000.05		Front;Rear	Saloon RWD 104941		Flexible Coupling	510579
	1993.06-2000.05		Front;Rear	Saloon RWD 104941		Flexible Coupling	512678
	1993.06-2000.05		Front	Saloon RWD 104941	Inner diameter:37mm	Flexible Coupling Kit	510434S
	1993.06-2000.05		Front	Saloon RWD 104941	Inner diameter:46.5mm	Flexible Coupling Kit	510580S
	1993.06-2000.05		Front;Rear	Saloon RWD 104941		Flexible Coupling Kit	512673S
2.8 (145 kw)	1997.04-2000.10		Centre	Estate RWD 112920		Center Bearing Support	538666
	1997.04-2000.10		Front;Rear	Estate RWD 112920		Flexible Coupling	512678
	1997.04-2000.10		Front	Estate RWD 112920		Flexible Coupling Kit	537819S
	1997.04-2000.10		Front;Rear	Estate RWD 112920		Flexible Coupling Kit	512673S
	1997.06-2000.05		Centre	Saloon RWD 112920		Center Bearing Support	538666
	1997.06-2000.05		Front;Rear	Saloon RWD 112920		Flexible Coupling	512678
	1997.06-2000.05		Front	Saloon RWD 112920	Inner diameter:37mm	Flexible Coupling Kit	510434S
	1997.06-2000.05		Front	Saloon RWD 112920	Inner diameter:39mm	Flexible Coupling Kit	510570S
	1997.06-2000.05		Front	Saloon RWD 112920	Inner diameter:50mm	Flexible Coupling Kit	537819S
	1997.06-2000.05		Front;Rear	Saloon RWD 112920		Flexible Coupling Kit	512673S
3.0 (170 kw)	2005.01-2007.11		Front;Rear	Estate RWD 272940		Flexible Coupling	512678
	2005.01-2007.11		Front;Rear	Estate RWD 272940		Flexible Coupling Kit	512673S
	2005.01-2007.12		Front;Rear	Saloon RWD 272940		Flexible Coupling	512678
	2005.01-2007.12		Front;Rear	Saloon RWD 272940		Flexible Coupling Kit	512673S
	2005.03-2007.11		Centre	Estate 4WD 272941	with bearing	Center Bearing Support	538639
	2005.03-2007.11		Front;Rear	Estate 4WD 272941		Flexible Coupling	512678
	2005.03-2007.11		Front;Rear	Estate 4WD 272941		Flexible Coupling Kit	512673S
	2005.03-2007.12	AT	Front	Saloon 4WD 272941	Model year from:2006	Propshaft	PS900346
	2005.03-2007.12		Centre	Saloon 4WD 272941	with bearing	Center Bearing Support	538639
	2005.03-2007.12		Front;Rear	Saloon 4WD 272941		Flexible Coupling	512678
	2005.03-2007.12		Front;Rear	Saloon 4WD 272941		Flexible Coupling Kit	512673S
	2007.02-2014.01		Centre	Saloon RWD 272947	not for 7AT	Center Bearing Support	538668
	2007.02-2014.01		Front;Rear	Saloon RWD 272947		Flexible Coupling	512678
	2007.02-2014.01		Front;Rear	Saloon RWD 272947		Flexible Coupling Kit	512673S
	2007.05-2014.01		Centre	Saloon 4WD 272948		Center Bearing Support	538668
	2007.05-2014.01		Front;Rear	Saloon 4WD 272948		Flexible Coupling	512678

	YEAR	TRANSM.	FITTING POSITION	BODY STYLE & DRIVE TYPE & ENGINE	REMARKS	PRODUCT	GSP Ref.
MERCEDES-BENZ							
C280							
3.0 (170 kw)	2007.05-2014.01		Front;Rear	Saloon 4WD 272948		Flexible Coupling Kit	512673S
	2007.11-2010.12		Centre	Estate RWD 272947	not for 7AT	Center Bearing Support	538668
	2007.11-2010.12		Front;Rear	Estate RWD 272947		Flexible Coupling	512678
	2007.11-2010.12		Front;Rear	Estate RWD 272947		Flexible Coupling Kit	512673S
C300							
2.0 (180 kw)	2015.01-2018.08		Centre	Saloon RWD 274920		Center Bearing Support	538622
	2015.01-2018.08		Front	Saloon RWD 274920	9AT	Flexible Coupling	537630
	2015.01-2018.08		Front	Saloon RWD 274920	7AT	Flexible Coupling	538501
	2015.01-2018.08		Front;Rear	Saloon RWD 274920		Flexible Coupling	512677
	2015.01-2018.08		Front	Saloon RWD 274920		Flexible Coupling Kit	538501S
	2015.01-2018.08		Front;Rear	Saloon RWD 274920	7AT	Flexible Coupling Kit	512677S
	2015.01-2018.08		Front;Rear	Saloon RWD 274920		Flexible Coupling Kit	537630S
	2015.09-2018.05		Centre	Estate RWD 274920		Center Bearing Support	538622
	2015.09-2018.05		Front	Estate RWD 274920	9AT	Flexible Coupling	537630
	2015.09-2018.05		Front	Estate RWD 274920	7AT	Flexible Coupling	538501
	2015.09-2018.05		Front;Rear	Estate RWD 274920		Flexible Coupling	512677
	2015.09-2018.05		Front	Estate RWD 274920		Flexible Coupling Kit	538501S
	2015.09-2018.05		Front;Rear	Estate RWD 274920	7AT	Flexible Coupling Kit	512677S
	2015.09-2018.05		Front;Rear	Estate RWD 274920		Flexible Coupling Kit	537630S
	2015.09-2018.08	AT	Front	Saloon 4WD 274920	Model year from:2015	Propshaft	PS900356
	2015.09-2018.08		Centre	Saloon 4WD 274920		Center Bearing Support	538622
	2015.09-2018.08		Front;Rear	Saloon 4WD 274920	Inner diameter:49.5mm	Flexible Coupling	512678
	2015.09-2018.08		Front;Rear	Saloon 4WD 274920	Inner diameter:48.5mm	Flexible Coupling	537627
	2015.09-2018.08		Front;Rear	Saloon 4WD 274920	Inner diameter:50mm	Flexible Coupling Kit	512673S
	2015.09-2018.08		Front;Rear	Saloon 4WD 274920	Inner diameter:48.5mm	Flexible Coupling Kit	537627S
	2015.10-2018.05		Centre	Coupe RWD 274920		Center Bearing Support	538622
	2015.10-2018.05		Front	Coupe RWD 274920		Flexible Coupling	538501
	2015.10-2018.05		Front;Rear	Coupe RWD 274920		Flexible Coupling	512677
	2015.10-2018.05		Front	Coupe RWD 274920		Flexible Coupling Kit	538501S
	2015.10-2018.05		Front;Rear	Coupe RWD 274920	7AT	Flexible Coupling Kit	512677S
	2015.10-2018.05		Front;Rear	Coupe RWD 274920		Flexible Coupling Kit	537630S
	2016.06-2018.05		Centre	Cabriolet RWD 274920		Center Bearing Support	538622
	2016.06-2018.05		Front	Cabriolet RWD 274920	9AT	Flexible Coupling	537630
	2016.06-2018.05		Front	Cabriolet RWD 274920	7AT	Flexible Coupling	538501
	2016.06-2018.05		Front;Rear	Cabriolet RWD 274920		Flexible Coupling	512677
	2016.06-2018.05		Front	Cabriolet RWD 274920		Flexible Coupling Kit	538501S
	2016.06-2018.05		Front;Rear	Cabriolet RWD 274920	7AT	Flexible Coupling Kit	512677S
	2016.06-2018.05		Front;Rear	Cabriolet RWD 274920		Flexible Coupling Kit	537630S
	2018.06-2021.02		Centre	Estate 4WD 654920		Center Bearing Support	538622
	2018.06-2021.02		Front;Rear	Estate 4WD 654920	9AT	Flexible Coupling	537627
	2018.06-2021.02		Front;Rear	Estate RWD 654920		Flexible Coupling	537851
	2018.06-2021.02		Front;Rear	Estate 4WD 654920	9AT	Flexible Coupling Kit	537627S
	2018.06-2021.02		Front;Rear	Estate RWD 654920		Flexible Coupling Kit	537630S
	2018.06-2021.05		Centre	Saloon 4WD 654920		Center Bearing Support	538622
	2018.06-2021.05		Front;Rear	Saloon 4WD 654920	9AT	Flexible Coupling	537627
	2018.06-2021.05		Front;Rear	Saloon RWD 654920		Flexible Coupling	537851
	2018.06-2021.05		Front;Rear	Saloon 4WD 654920	9AT	Flexible Coupling Kit	537627S
	2018.06-2021.05		Front;Rear	Saloon RWD 654920		Flexible Coupling Kit	537630S
	2018.07-2023.04		Centre	Coupe 4WD 654920		Center Bearing Support	538622
	2018.07-2023.04		Front;Rear	Coupe 4WD 654920	9AT	Flexible Coupling	537627
	2018.07-2023.04		Front;Rear	Coupe RWD 654920		Flexible Coupling	537851
	2018.07-2023.04		Front;Rear	Coupe 4WD 654920	9AT	Flexible Coupling Kit	537627S
	2018.07-2023.04		Front;Rear	Cabriolet RWD 654920		Flexible Coupling Kit	537630S
	2018.07-2023.04		Front;Rear	Coupe RWD 654920		Flexible Coupling Kit	537630S
2.0 (183 kw)	2018.05-2021.05		Centre	Saloon RWD 264920		Center Bearing Support	538622
	2018.05-2021.05		Front;Rear	Saloon RWD 264920		Flexible Coupling Kit	537630S
2.0 (190 kw)	2018.05-2021.02		Centre	Estate RWD 264920		Center Bearing Support	538622
	2018.05-2021.02		Front;Rear	Estate 4WD 264920		Flexible Coupling	537627
	2018.05-2021.02		Front;Rear	Estate 4WD 264920		Flexible Coupling Kit	537627S
	2018.05-2021.02		Front;Rear	Estate RWD 264920		Flexible Coupling Kit	537630S
	2018.05-2021.05	AT	Front	Saloon 4WD 264920	Model year to:2021	Propshaft	PS900548
	2018.05-2021.05		Centre	Saloon RWD 264920		Center Bearing Support	538622
	2018.05-2021.05		Front;Rear	Saloon 4WD 264920		Flexible Coupling	537627
	2018.05-2021.05		Front;Rear	Saloon 4WD 264920		Flexible Coupling Kit	537627S

	YEAR	TRANSM.	FITTING POSITION	BODY STYLE & DRIVE TYPE & ENGINE	REMARKS	PRODUCT	GSP Ref.
MERCEDES-BENZ **C300**							
2.0 (190 kw)	2018.05-2021.05		Front;Rear	Saloon RWD 264920		Flexible Coupling Kit	537630S
	2018.05-2023.04		Centre	Cabriolet RWD 264920		Center Bearing Support	538622
	2018.05-2023.04		Centre	Coupe RWD 264920		Center Bearing Support	538622
	2018.05-2023.04		Front;Rear	Coupe 4WD 264920		Flexible Coupling	537627
	2018.05-2023.04		Front;Rear	Coupe 4WD 264920		Flexible Coupling Kit	537627S
	2018.05-2023.04		Front;Rear	Cabriolet RWD 264920		Flexible Coupling Kit	537630S
	2018.05-2023.04		Front;Rear	Coupe RWD 264920		Flexible Coupling Kit	537630S
	2019.05-2021.02		Centre	Estate RWD 264920		Center Bearing Support	538622
	2019.05-2021.02		Front;Rear	Estate 4WD 264920		Flexible Coupling	537627
	2019.05-2021.02		Rear	Estate RWD 264920		Flexible Coupling Kit	537630S
	2019.05-2021.02		Front;Rear	Estate 4WD 264920		Flexible Coupling Kit	537627S
	2019.05-2021.05		Centre	Saloon RWD 264920		Center Bearing Support	538622
	2019.05-2021.05		Front;Rear	Saloon 4WD 264920		Flexible Coupling	537627
	2019.05-2021.05		Rear	Saloon RWD 264920		Flexible Coupling Kit	537630S
	2019.05-2021.05		Front;Rear	Saloon 4WD 264920		Flexible Coupling Kit	537627S
	2019.05-2023.04		Centre	Coupe RWD 264920		Center Bearing Support	538622
	2019.05-2023.04		Centre	Cabriolet RWD 264920		Center Bearing Support	538622
	2019.05-2023.04		Front;Rear	Coupe 4WD 264920		Flexible Coupling	537627
	2019.05-2023.04		Front;Rear	Cabriolet 4WD 264920		Flexible Coupling	537627
	2019.05-2023.04		Rear	Coupe RWD 264920		Flexible Coupling Kit	537630S
	2019.05-2023.04		Rear	Cabriolet RWD 264920		Flexible Coupling Kit	537630S
	2019.05-2023.04		Front;Rear	Coupe 4WD 264920		Flexible Coupling Kit	537627S
	2019.05-2023.04		Front;Rear	Cabriolet 4WD 264920		Flexible Coupling Kit	537627S
	2021.03-		Front;Rear	Saloon RWD 254920		Flexible Coupling	537851
	2021.03-		Front;Rear	Saloon 4WD 254920		Flexible Coupling	537851
	2021.10-		Front;Rear	Estate RWD 254920		Flexible Coupling	537851
2.0 (225 kw)	2019.05-2021.02		Front;Rear	Estate RWD 654920		Flexible Coupling	538506
	2019.05-2021.05		Front;Rear	Saloon RWD 654920		Flexible Coupling	538506
2.0 (235 kw)	2019.07-2021.02		Centre	Estate RWD 274920		Center Bearing Support	538622
	2019.07-2021.02		Front;Rear	Estate RWD 274920		Flexible Coupling	538506
	2019.07-2021.05		Centre	Saloon 4WD 274920		Center Bearing Support	538622
	2019.07-2021.05		Centre	Saloon RWD 274920		Center Bearing Support	538622
	2019.07-2021.05		Front;Rear	Saloon 4WD 274920	Inner diameter:49.5mm	Flexible Coupling	512678
	2019.07-2021.05		Front;Rear	Saloon 4WD 274920	Inner diameter:48.5mm	Flexible Coupling	537627
	2019.07-2021.05		Front;Rear	Saloon RWD 274920		Flexible Coupling	538510
	2019.07-2021.05		Front;Rear	Saloon 4WD 274920	Inner diameter:50mm	Flexible Coupling Kit	512673S
	2019.07-2021.05		Front;Rear	Saloon 4WD 274920	Inner diameter:48.5mm	Flexible Coupling Kit	537627S
2.2 (150 kw)	2014.10-2018.05		Centre	Estate RWD 651921		Center Bearing Support	538622
	2014.10-2018.05		Rear	Estate RWD 651921	7AT	Flexible Coupling	537843
	2014.10-2018.05		Front;Rear	Estate RWD 651921	7AT	Flexible Coupling	533884
	2014.10-2018.05		Front;Rear	Estate RWD 651921	9AT	Flexible Coupling	537851
	2014.10-2018.05		Rear	Estate RWD 651921		Flexible Coupling Kit	538509S
	2014.10-2018.05		Front;Rear	Estate RWD 651921	7AT	Flexible Coupling Kit	537832S
	2014.10-2018.05		Front;Rear	Estate RWD 651921	9AT	Flexible Coupling Kit	537851S
2.2 (170 kw)	2014.05-2018.05		Centre	Saloon RWD 651921		Center Bearing Support	538622
	2014.05-2018.05		Rear	Saloon RWD 651921	7AT	Flexible Coupling	537843
	2014.05-2018.05		Front;Rear	Saloon RWD 651921	7AT	Flexible Coupling	533884
	2014.05-2018.05		Front;Rear	Saloon RWD 651921	9AT	Flexible Coupling	537851
	2014.05-2018.05		Rear	Saloon RWD 651921		Flexible Coupling Kit	538509S
	2014.05-2018.05		Front;Rear	Saloon RWD 651921	7AT	Flexible Coupling Kit	537832S
	2014.05-2018.05		Front;Rear	Saloon RWD 651921	9AT	Flexible Coupling Kit	537851S
3.0 (170 kw)	2007.05-2014.01	AT	Front	Saloon 4WD 272948		Propshaft	PS900359
	2007.05-2014.01	AT	Rear	Saloon 4WD 272948	Model year from:2008,Model year to:2010	Propshaft	PS901660
	2007.05-2014.01		Centre	Saloon 4WD 272948	Country Specific Design:Canada	Center Bearing Support	538668
	2007.05-2014.01		Front;Rear	Saloon 4WD 272948		Flexible Coupling	512678
	2007.05-2014.01		Front;Rear	Saloon 4WD 272948		Flexible Coupling Kit	512673S
	2008.01-2012.12		Front;Rear	Saloon RWD M 272.947		Flexible Coupling Kit	512673S
	2008.01-2014.01		Centre	Saloon RWD 272947	not for 7AT	Center Bearing Support	538668
	2008.01-2014.01		Front;Rear	Saloon RWD 272947		Flexible Coupling	512678
	2008.01-2014.01		Front;Rear	Saloon RWD 272947		Flexible Coupling Kit	512673S
	2008.02-2014.01		Centre	Estate RWD 272947	not for 7AT	Center Bearing Support	538668
	2008.02-2014.01		Front;Rear	Estate RWD 272947		Flexible Coupling	512678
	2008.02-2014.01		Front;Rear	Estate RWD 272947		Flexible Coupling Kit	512673S
	2011.01-2014.01		Centre	Estate 4WD 642832		Center Bearing Support	538668

	YEAR	TRANSM.	FITTING POSITION	BODY STYLE & DRIVE TYPE & ENGINE	REMARKS	PRODUCT	GSP Ref.
MERCEDES-BENZ							
C300							
3.0 (170 kw)	2011.01-2014.01		Centre	Saloon 4WD 642832		Center Bearing Support	538668
	2011.01-2014.01		Front;Rear	Estate 4WD 642832		Flexible Coupling	512678
	2011.01-2014.01		Front;Rear	Saloon 4WD 642832		Flexible Coupling	512678
	2011.01-2014.01		Front;Rear	Estate 4WD 642832		Flexible Coupling Kit	512673S
	2011.01-2014.01		Front;Rear	Saloon 4WD 642832		Flexible Coupling Kit	512673S
3.5 (185 kw)	2009.09-2014.01		Centre	Saloon RWD 276957		Center Bearing Support	538668
	2009.09-2014.01		Front	Saloon RWD 276957	7AT	Flexible Coupling	512672
	2009.09-2014.01		Front;Rear	Saloon RWD 276957	7AT	Flexible Coupling	512677
	2009.09-2014.01		Front	Saloon RWD 276957	537889S and 537794S different structure	Flexible Coupling Kit	537889S
	2009.09-2014.01		Rear	Saloon RWD 276957	537794S and 537889S different structure	Flexible Coupling Kit	537794S
	2009.09-2014.01		Front;Rear	Saloon RWD 276957		Flexible Coupling Kit	512677S
	2011.02-2014.01	AT	Rear	Saloon 4WD 276957	Model year from:2013	Propshaft	PS901660
	2011.02-2014.01		Centre	Saloon 4WD 276957		Center Bearing Support	538668
	2011.02-2014.01		Front;Rear	Saloon 4WD 276957		Flexible Coupling	512678
	2011.02-2014.01		Front;Rear	Saloon 4WD 276957		Flexible Coupling Kit	512673S
C30CDi AMG							
3.0 (170 kw)	2002.08-2004.12		Front	Saloon RWD 612990		Flexible Coupling	538513
	2002.08-2004.12		Front	Estate RWD 612990		Flexible Coupling	538513
	2002.08-2004.12		Front	Saloon RWD 612990		Flexible Coupling Kit	538513S
	2002.08-2004.12		Front	Estate RWD 612990		Flexible Coupling Kit	538513S
	2002.08-2008.01		Front	Coupe RWD 612990		Flexible Coupling	538513
	2002.08-2008.01		Front	Coupe RWD 612990		Flexible Coupling Kit	538513S
C32 AMG							
3.2 (260 kw)	2000.11-2004.12		Centre	Saloon RWD 112961		Center Bearing Support	538639
	2000.11-2004.12		Centre	Estate RWD 112961	with bearing	Center Bearing Support	538639
	2000.11-2004.12		Front;Rear	Saloon RWD 112961		Flexible Coupling	512677
	2000.11-2004.12		Front;Rear	Estate RWD 112961		Flexible Coupling	512677
	2000.11-2004.12		Rear	Saloon RWD 112961		Flexible Coupling Kit	537794S
	2000.11-2004.12		Rear	Estate RWD 112961		Flexible Coupling Kit	537794S
	2000.11-2004.12		Front;Rear	Saloon RWD 112961		Flexible Coupling Kit	512677S
	2000.11-2004.12		Front;Rear	Estate RWD 112961		Flexible Coupling Kit	512677S
	2000.11-2004.12		Front;Rear	Saloon RWD 112961		Flexible Coupling Kit	512678S
	2000.11-2004.12		Front;Rear	Estate RWD 112961		Flexible Coupling Kit	512678S
	2002.05-2008.05		Front;Rear	Coupe RWD M 112.961		Flexible Coupling	512677
	2002.05-2008.05		Rear	Coupe RWD M 112.961		Flexible Coupling Kit	537794S
	2002.05-2008.05		Front;Rear	Coupe RWD M 112.961		Flexible Coupling Kit	512677S
C320							
3.0 (165 kw)	2005.01-2007.02		Front;Rear	Saloon RWD 642910	not for 7AT	Flexible Coupling	512677
	2005.01-2007.02		Front;Rear	Saloon RWD 642910	AT	Flexible Coupling	533884
	2005.01-2007.02		Front;Rear	Saloon RWD 642910		Flexible Coupling Kit	512677S
	2005.01-2007.02		Front;Rear	Saloon RWD 642910	not for 7AT	Flexible Coupling Kit	537794S
	2005.01-2007.02		Front;Rear	Saloon RWD 642910	AT	Flexible Coupling Kit	537832S
	2005.01-2007.11		Front;Rear	Estate RWD 642910	not for 7AT	Flexible Coupling	512677
	2005.01-2007.11		Front;Rear	Estate RWD 642910	AT	Flexible Coupling	533884
	2005.01-2007.11		Front;Rear	Estate RWD 642910		Flexible Coupling Kit	512677S
	2005.01-2007.11		Front;Rear	Estate RWD 642910	not for 7AT	Flexible Coupling Kit	537794S
	2005.01-2007.11		Front;Rear	Estate RWD 642910	AT	Flexible Coupling Kit	537832S
	2007.02-2014.01		Centre	Saloon RWD 642960		Center Bearing Support	538668
	2007.02-2014.01		Front;Rear	Saloon RWD 642960		Flexible Coupling	533884
	2007.02-2014.01		Front;Rear	Saloon RWD 642960		Flexible Coupling Kit	537832S
	2007.05-2014.01		Centre	Saloon 4WD 642961		Center Bearing Support	538668
	2007.05-2014.01		Front;Rear	Saloon 4WD 642961		Flexible Coupling	512678
	2007.05-2014.01		Front;Rear	Saloon 4WD 642961		Flexible Coupling Kit	512673S
	2007.08-2011.12		Centre	Estate 4WD 642961		Center Bearing Support	538668
	2007.08-2011.12		Front;Rear	Estate 4WD 642961		Flexible Coupling	512678
	2007.08-2011.12		Front;Rear	Estate 4WD 642961		Flexible Coupling Kit	512673S
	2007.11-2010.12		Centre	Estate RWD 642960		Center Bearing Support	538668
	2007.11-2010.12		Front;Rear	Estate RWD 642960		Flexible Coupling	533884
	2007.11-2010.12		Front;Rear	Estate RWD 642960		Flexible Coupling Kit	537832S
3.2 (160 kw)	2000.05-2005.07		Centre	Saloon RWD 112946		Center Bearing Support	538639
	2000.05-2005.07		Front	Saloon RWD 112946	not for 5AT	Flexible Coupling	538111
	2000.05-2005.07		Front;Rear	Saloon RWD 112946		Flexible Coupling	512678
	2000.05-2005.07		Front;Rear	Saloon RWD 112946		Flexible Coupling Kit	512673S
	2000.11-2005.07		Centre	Estate RWD 112946	with bearing	Center Bearing Support	538639

	YEAR	TRANSM.	FITTING POSITION	BODY STYLE & DRIVE TYPE & ENGINE	REMARKS	PRODUCT	GSP Ref.
MERCEDES-BENZ							
C320							
3.2 (160 kw)	2000.11-2005.07		Front	Estate RWD 112946	not for 5AT	Flexible Coupling	538111
	2000.11-2005.07		Front;Rear	Estate RWD 112946	5AT	Flexible Coupling	512678
	2000.11-2005.07		Front;Rear	Estate RWD 112946		Flexible Coupling Kit	512673S
	2002.06-2005.12		Centre	Coupe RWD 112946	with bearing	Center Bearing Support	538639
	2002.06-2005.12		Front	Coupe RWD 112946	not for 5AT	Flexible Coupling	538111
	2002.06-2005.12		Front;Rear	Coupe RWD 112946	5AT	Flexible Coupling	512678
	2002.06-2005.12		Front;Rear	Coupe RWD 112946		Flexible Coupling Kit	512673S
	2002.08-2005.07	AT	Front	Saloon 4WD 112953	Model year from:2003,Model year to:2005	Propshaft	PS900346
	2002.08-2005.07		Centre	Saloon 4WD 112953	with bearing	Center Bearing Support	538639
	2002.08-2005.07		Centre	Estate 4WD 112953	with bearing	Center Bearing Support	538639
	2002.08-2005.07		Front;Rear	Saloon 4WD 112953	Bolt Hole Centres:100mm	Flexible Coupling	512678
	2002.08-2005.07		Front;Rear	Estate 4WD 112953	Bolt Hole Centres:100mm	Flexible Coupling	512678
	2002.08-2005.07		Front;Rear	Saloon 4WD 112953	Bolt Hole Centres:90mm	Flexible Coupling	533419
	2002.08-2005.07		Front;Rear	Estate 4WD 112953	Bolt Hole Centres:90mm	Flexible Coupling	533419
	2002.08-2005.07		Front;Rear	Saloon 4WD 112953	Bolt Hole Centres:120mm	Flexible Coupling	533884
	2002.08-2005.07		Front;Rear	Estate 4WD 112953	Bolt Hole Centres:120mm	Flexible Coupling	533884
	2002.08-2005.07		Front;Rear	Saloon 4WD 112953		Flexible Coupling Kit	512673S
	2002.08-2005.07		Front;Rear	Estate 4WD 112953		Flexible Coupling Kit	512673S
	2003.09-2005.12		Front;Rear	Saloon RWD 112.946		Flexible Coupling Kit	512673S
C350							
2.0 (205 kw)	2015.02-2018.05		Centre	Estate RWD 274920		Center Bearing Support	538622
	2015.02-2018.05		Front;Rear	Estate RWD 274920	7AT	Flexible Coupling	533884
	2015.02-2018.05		Front;Rear	Estate RWD 274920	7AT,9AT	Flexible Coupling	538510
	2015.02-2018.05		Front;Rear	Estate RWD 274920	7AT	Flexible Coupling Kit	537832S
	2015.02-2018.08		Front;Rear	Saloon RWD 274920	7AT	Flexible Coupling	533884
	2015.02-2018.08		Front;Rear	Saloon RWD 274920	7AT	Flexible Coupling Kit	537832S
3.0 (165 kw)	2007.02-2014.01		Front;Rear	Saloon RWD 642830/642960		Flexible Coupling	533884
	2007.02-2014.01		Front;Rear	Saloon RWD 642830/642960		Flexible Coupling Kit	537832S
	2007.05-2011.12		Centre	Saloon 4WD 642832/642961		Center Bearing Support	538668
	2007.05-2011.12		Front;Rear	Saloon 4WD 642832/642961		Flexible Coupling	512678
	2007.05-2011.12		Front;Rear	Saloon 4WD 642832/642961		Flexible Coupling Kit	512673S
	2007.08-2011.12		Centre	Estate 4WD 642832/642961		Center Bearing Support	538668
	2007.08-2011.12		Front;Rear	Estate 4WD 642832/642961		Flexible Coupling	512678
	2007.08-2011.12		Front;Rear	Estate 4WD 642832/642961		Flexible Coupling Kit	512673S
	2007.11-2011.12		Centre	Estate RWD 642830/642960		Center Bearing Support	538668
	2007.11-2011.12		Front;Rear	Estate RWD 642830/642960		Flexible Coupling	533884
	2007.11-2011.12		Front;Rear	Estate RWD 642830/642960		Flexible Coupling Kit	537832S
3.0 (170 kw)	2009.07-2014.01		Centre	Estate RWD 642830		Center Bearing Support	538668
	2009.07-2014.01		Centre	Estate 4WD 642832		Center Bearing Support	538668
	2009.07-2014.01		Centre	Saloon RWD 642830		Center Bearing Support	538668
	2009.07-2014.01		Centre	Saloon 4WD 642832		Center Bearing Support	538668
	2009.07-2014.01		Front;Rear	Estate 4WD 642832		Flexible Coupling	512678
	2009.07-2014.01		Front;Rear	Saloon 4WD 642832		Flexible Coupling	512678
	2009.07-2014.01		Front;Rear	Estate RWD 642830		Flexible Coupling	533884
	2009.07-2014.01		Front;Rear	Saloon RWD 642830		Flexible Coupling	533884
	2009.07-2014.01		Front;Rear	Estate 4WD 642832		Flexible Coupling Kit	512673S
	2009.07-2014.01		Front;Rear	Saloon 4WD 642832		Flexible Coupling Kit	512673S
	2009.07-2014.01		Front;Rear	Estate RWD 642830		Flexible Coupling Kit	537832S
	2009.07-2014.01		Front;Rear	Saloon RWD 642830		Flexible Coupling Kit	537832S
3.0 (195 kw)	2011.06-2014.01		Centre	Saloon RWD 642834		Center Bearing Support	538668
	2011.06-2014.01		Centre	Estate RWD 642834		Center Bearing Support	538668
	2011.06-2014.01		Front;Rear	Saloon RWD 642834		Flexible Coupling	533884
	2011.06-2014.01		Front;Rear	Estate RWD 642834		Flexible Coupling	533884
	2011.06-2014.01		Front;Rear	Saloon RWD 642834		Flexible Coupling Kit	537832S
	2011.06-2014.01		Front;Rear	Estate RWD 642834		Flexible Coupling Kit	537832S
3.5 (170 kw)	2005.01-2007.02		Front;Rear	Saloon RWD M 272.960		Flexible Coupling Kit	512677S
3.5 (200 kw)	2005.01-2007.02		Front;Rear	Saloon RWD 272960		Flexible Coupling	512677
	2005.01-2007.02		Front;Rear	Saloon RWD 272960		Flexible Coupling Kit	512677S
	2005.01-2007.02		Front;Rear	Saloon RWD 272960		Flexible Coupling Kit	537794S
	2005.01-2007.11		Front;Rear	Estate RWD 272960		Flexible Coupling	512677
	2005.01-2007.11		Front;Rear	Estate RWD 272960		Flexible Coupling Kit	512677S
	2005.01-2007.11		Front;Rear	Estate RWD 272960		Flexible Coupling Kit	537794S
	2005.01-2008.01		Front;Rear	Coupe RWD 272960		Flexible Coupling	512677
	2005.01-2008.01		Front;Rear	Coupe RWD 272960		Flexible Coupling Kit	512677S

	YEAR	TRANSM.	FITTING POSITION	BODY STYLE & DRIVE TYPE & ENGINE	REMARKS	PRODUCT	GSP Ref.
MERCEDES-BENZ							
C350							
3.5 (200 kw)	2005.01-2008.01		Front;Rear	Coupe RWD 272960		Flexible Coupling Kit	537794S
	2005.03-2007.02	AT	Front	Saloon 4WD 272970	Model year from:2006	Propshaft	PS900346
	2005.03-2007.02		Centre	Saloon 4WD 272970	with bearing	Center Bearing Support	538639
	2005.03-2007.02		Front;Rear	Saloon 4WD 272970		Flexible Coupling	512678
	2005.03-2007.02		Front;Rear	Saloon 4WD 272970		Flexible Coupling Kit	512673S
	2005.04-2007.11		Centre	Estate 4WD 272970	with bearing	Center Bearing Support	538639
	2005.04-2007.11		Front;Rear	Estate 4WD 272970		Flexible Coupling	512678
	2005.04-2007.11		Front;Rear	Estate 4WD 272970		Flexible Coupling Kit	512673S
	2007.02-2014.01		Centre	Saloon RWD 272961		Center Bearing Support	538668
	2007.02-2014.01		Front;Rear	Saloon RWD 272961	7AT	Flexible Coupling	512677
	2007.02-2014.01		Front;Rear	Saloon RWD 272961		Flexible Coupling Kit	512677S
	2007.02-2014.01		Front;Rear	Saloon RWD 272961	7AT	Flexible Coupling Kit	537794S
	2007.05-2011.12	AT	Rear	Saloon 4WD 272971	Model year from:2012	Propshaft	PS901660
	2007.05-2011.12		Centre	Saloon 4WD 272971	Country Specific Design:Canada	Center Bearing Support	538668
	2007.05-2011.12		Front;Rear	Saloon 4WD 272971		Flexible Coupling	512678
	2007.05-2011.12		Front;Rear	Saloon 4WD 272971		Flexible Coupling Kit	512673S
	2007.11-2014.01		Centre	Estate RWD 272961		Center Bearing Support	538668
	2007.11-2014.01		Front;Rear	Estate RWD 272961	7AT	Flexible Coupling	512677
	2007.11-2014.01		Front;Rear	Estate RWD 272961		Flexible Coupling Kit	512677S
	2007.11-2014.01		Front;Rear	Estate RWD 272961	7AT	Flexible Coupling Kit	537794S
3.5 (215 kw)	2008.03-2014.01		Centre	Saloon RWD 272982		Center Bearing Support	538668
	2008.03-2014.01		Front;Rear	Saloon RWD 272982	7AT	Flexible Coupling	512677
	2008.03-2014.01		Front;Rear	Saloon RWD 272982		Flexible Coupling Kit	512677S
	2008.03-2014.01		Front;Rear	Saloon RWD 272982	7AT	Flexible Coupling Kit	537794S
3.5 (225 kw)	2011.01-2014.01	AT	Rear	Saloon 4WD 276957	Model year from:2012	Propshaft	PS901660
	2011.01-2014.01		Centre	Saloon 4WD 276957	Inner diameter:30mm	Center Bearing Support	538668
	2011.01-2014.01		Centre	Saloon RWD 276957	Inner diameter:30mm	Center Bearing Support	538668
	2011.01-2014.01		Front	Saloon RWD 276957	7AT	Flexible Coupling	512672
	2011.01-2014.01		Front;Rear	Saloon RWD 276957	7AT	Flexible Coupling	512677
	2011.01-2014.01		Front;Rear	Saloon 4WD 276957		Flexible Coupling	512678
	2011.01-2014.01		Front	Saloon RWD 276957	537889S and 537794S different structure	Flexible Coupling Kit	537889S
	2011.01-2014.01		Rear	Saloon RWD 276957	537794S and 537889S different structure	Flexible Coupling Kit	537794S
	2011.01-2014.01		Front;Rear	Saloon 4WD 276957		Flexible Coupling Kit	512673S
	2011.01-2014.01		Front;Rear	Saloon RWD 276957		Flexible Coupling Kit	512677S
	2011.06-2014.01		Centre	Estate RWD 276957		Center Bearing Support	538668
	2011.06-2014.01		Centre	Coupe RWD 276957		Center Bearing Support	538668
	2011.06-2014.01		Front	Estate RWD 276957	7AT	Flexible Coupling	512672
	2011.06-2014.01		Front	Coupe RWD 276957	7AT	Flexible Coupling	512672
	2011.06-2014.01		Front;Rear	Estate RWD 276957	7AT	Flexible Coupling	512677
	2011.06-2014.01		Front;Rear	Coupe RWD 276957	7AT	Flexible Coupling	512677
	2011.06-2014.01		Front	Estate RWD 276957	537889S and 537794S different structure	Flexible Coupling Kit	537889S
	2011.06-2014.01		Front	Coupe RWD 276957	537889S and 537794S different structure	Flexible Coupling Kit	537889S
	2011.06-2014.01		Rear	Estate RWD 276957	537794S and 537889S different structure	Flexible Coupling Kit	537794S
	2011.06-2014.01		Rear	Coupe RWD 276957	537794S and 537889S different structure	Flexible Coupling Kit	537794S
	2011.06-2014.01		Front;Rear	Estate RWD 276957		Flexible Coupling Kit	512677S
	2011.06-2014.01		Front;Rear	Coupe RWD 276957		Flexible Coupling Kit	512677S
	2013.09-2014.01		Centre	Coupe 4WD 276957		Center Bearing Support	538668
	2013.09-2014.01		Front;Rear	Coupe 4WD 276957		Flexible Coupling	512678
	2013.09-2014.01		Front;Rear	Coupe 4WD 276957		Flexible Coupling Kit	512673S
C36 AMG							
3.6 (206 kw)	1994.01-1998.01		Centre	Saloon RWD 104941AMG		Center Bearing Support	538666
	1994.01-1998.01		Front;Rear	Saloon RWD 104941AMG		Flexible Coupling	510579
	1994.01-1998.01		Front;Rear	Saloon RWD 104941AMG		Flexible Coupling	512678
	1994.01-1998.01		Front	Saloon RWD 104941AMG	Inner diameter:37mm	Flexible Coupling Kit	510434S
	1994.01-1998.01		Front	Saloon RWD 104941AMG	Inner diameter:46.5mm	Flexible Coupling Kit	510580S
	1994.01-1998.01		Front;Rear	Saloon RWD 104941AMG		Flexible Coupling Kit	512673S
C400							
3.0 (245 kw)	2014.10-2020.11	AT	Front	Saloon 4WD 276823	For Model year:2015	Propshaft	PS900357
	2014.10-2020.11		Front;Rear	Saloon 4WD 276823	7AT	Flexible Coupling	512678
	2014.10-2020.11		Front;Rear	Saloon 4WD 276823	7AT;9AT	Flexible Coupling	537627
	2014.10-2020.11		Front;Rear	Saloon 4WD 276823	Inner diameter:50mm	Flexible Coupling Kit	512673S
	2014.10-2020.11		Front;Rear	Saloon 4WD 276823	Inner diameter:48.5mm	Flexible Coupling Kit	537627S
	2014.10-2021.02		Front;Rear	Estate 4WD 276823	7AT	Flexible Coupling	512678
	2014.10-2021.02		Front;Rear	Estate 4WD 276823	7AT;9AT	Flexible Coupling	537627

	YEAR	TRANSM.	FITTING POSITION	BODY STYLE & DRIVE TYPE & ENGINE	REMARKS	PRODUCT	GSP Ref.
MERCEDES-BENZ							
C400							
3.0 (245 kw)	2014.10-2021.02		Front;Rear	Estate 4WD 276823	Inner diameter:50mm	Flexible Coupling Kit	512673S
	2014.10-2021.02		Front;Rear	Estate 4WD 276823	Inner diameter:48.5mm	Flexible Coupling Kit	537627S
	2016.04-2022.06		Front;Rear	Coupe 4WD 276823	7AT	Flexible Coupling	512678
	2016.04-2022.06		Front;Rear	Coupe 4WD 276823	7AT;9AT	Flexible Coupling	537627
	2016.04-2022.06		Front;Rear	Coupe 4WD 276823	Inner diameter:50mm	Flexible Coupling Kit	512673S
	2016.04-2022.06		Front;Rear	Coupe 4WD 276823	Inner diameter:48.5mm	Flexible Coupling Kit	537627S
	2016.06-2023.04		Front;Rear	Cabriolet 4WD 276823	7AT	Flexible Coupling	512678
	2016.06-2023.04		Front;Rear	Cabriolet 4WD 276823	7AT;9AT	Flexible Coupling	537627
	2016.06-2023.04		Front;Rear	Cabriolet 4WD 276823	Inner diameter:50mm	Flexible Coupling Kit	512673S
	2016.06-2023.04		Front;Rear	Cabriolet 4WD 276823	Inner diameter:48.5mm	Flexible Coupling Kit	537627S
C43 AMG							
3.0 (270 kw)	2016.04-2018.05		Front;Rear	Coupe 4WD 276823	Inner diameter:49.5mm	Flexible Coupling	512678
	2016.04-2018.05		Front;Rear	Estate 4WD 276823	Inner diameter:49.5mm	Flexible Coupling	512678
	2016.04-2018.05		Front;Rear	Saloon 4WD 276823	Inner diameter:49.5mm	Flexible Coupling	512678
	2016.04-2018.05		Front;Rear	Coupe 4WD 276823	Inner diameter:48.5mm	Flexible Coupling	537627
	2016.04-2018.05		Front;Rear	Estate 4WD 276823	Inner diameter:48.5mm	Flexible Coupling	537627
	2016.04-2018.05		Front;Rear	Saloon 4WD 276823	Inner diameter:48.5mm	Flexible Coupling	537627
	2016.04-2018.05		Front;Rear	Coupe 4WD 276823	Inner diameter:50mm	Flexible Coupling Kit	512673S
	2016.04-2018.05		Front;Rear	Estate 4WD 276823	Inner diameter:50mm	Flexible Coupling Kit	512673S
	2016.04-2018.05		Front;Rear	Saloon 4WD 276823	Inner diameter:50mm	Flexible Coupling Kit	512673S
	2016.04-2018.05		Front;Rear	Coupe 4WD 276823	Inner diameter:48.5mm	Flexible Coupling Kit	537627S
	2016.04-2018.05		Front;Rear	Estate 4WD 276823	Inner diameter:48.5mm	Flexible Coupling Kit	537627S
	2016.04-2018.05		Front;Rear	Saloon 4WD 276823	Inner diameter:48.5mm	Flexible Coupling Kit	537627S
	2016.04-2018.05		Front;Rear	Coupe 4WD 276823		Flexible Coupling Kit	537630S
	2016.04-2018.05		Front;Rear	Estate 4WD 276823		Flexible Coupling Kit	537630S
	2016.04-2018.05		Front;Rear	Saloon 4WD 276823		Flexible Coupling Kit	537630S
	2016.10-2018.05		Front;Rear	Cabriolet 4WD 276823	Inner diameter:49.5mm	Flexible Coupling	512678
	2016.10-2018.05		Front;Rear	Cabriolet 4WD 276823	Inner diameter:48.5mm	Flexible Coupling	537627
	2016.10-2018.05		Front;Rear	Cabriolet 4WD 276823	Inner diameter:50mm	Flexible Coupling Kit	512673S
	2016.10-2018.05		Front;Rear	Cabriolet 4WD 276823	Inner diameter:48.5mm	Flexible Coupling Kit	537627S
	2016.10-2018.05		Front;Rear	Cabriolet 4WD 276823		Flexible Coupling Kit	537630S
3.0 (287 kw)	2018.05-2021.02		Front;Rear	Estate 4WD 276823	Inner diameter:49.5mm	Flexible Coupling	512678
	2018.05-2021.02		Front;Rear	Estate 4WD 276823	Inner diameter:48.5mm	Flexible Coupling	537627
	2018.05-2021.02		Front;Rear	Estate 4WD 276823	Inner diameter:50mm	Flexible Coupling Kit	512673S
	2018.05-2021.02		Front;Rear	Estate 4WD 276823	Inner diameter:48.5mm	Flexible Coupling Kit	537627S
	2018.05-2021.02		Front;Rear	Estate 4WD 276823		Flexible Coupling Kit	537630S
	2018.05-2021.05		Front;Rear	Saloon 4WD 276823	Inner diameter:49.5mm	Flexible Coupling	512678
	2018.05-2021.05		Front;Rear	Saloon 4WD 276823	Inner diameter:48.5mm	Flexible Coupling	537627
	2018.05-2021.05		Front;Rear	Saloon 4WD 276823	Inner diameter:50mm	Flexible Coupling Kit	512673S
	2018.05-2021.05		Front;Rear	Saloon 4WD 276823	Inner diameter:48.5mm	Flexible Coupling Kit	537627S
	2018.05-2021.05		Front;Rear	Saloon 4WD 276823		Flexible Coupling Kit	537630S
	2018.05-2023.04		Front;Rear	Coupe 4WD 276823	Inner diameter:49.5mm	Flexible Coupling	512678
	2018.05-2023.04		Front;Rear	Cabriolet 4WD 276823	Inner diameter:49.5mm	Flexible Coupling	512678
	2018.05-2023.04		Front;Rear	Coupe 4WD 276823	Inner diameter:48.5mm	Flexible Coupling	537627
	2018.05-2023.04		Front;Rear	Cabriolet 4WD 276823	Inner diameter:48.5mm	Flexible Coupling	537627
	2018.05-2023.04		Front;Rear	Coupe 4WD 276823	Inner diameter:50mm	Flexible Coupling Kit	512673S
	2018.05-2023.04		Front;Rear	Cabriolet 4WD 276823	Inner diameter:50mm	Flexible Coupling Kit	512673S
	2018.05-2023.04		Front;Rear	Coupe 4WD 276823	Inner diameter:48.5mm	Flexible Coupling Kit	537627S
	2018.05-2023.04		Front;Rear	Cabriolet 4WD 276823	Inner diameter:48.5mm	Flexible Coupling Kit	537627S
	2018.05-2023.04		Front;Rear	Coupe 4WD 276823		Flexible Coupling Kit	537630S
	2018.05-2023.04		Front;Rear	Cabriolet 4WD 276823		Flexible Coupling Kit	537630S
4.3 (225 kw)	1996.12-2000.12		Centre	Saloon RWD 113944		Center Bearing Support	538666
	1996.12-2000.12		Front;Rear	Saloon RWD 113944		Flexible Coupling	512677
	1996.12-2000.12		Front	Saloon RWD 113944		Flexible Coupling Kit	510434S
	1996.12-2000.12		Front;Rear	Saloon RWD 113944		Flexible Coupling Kit	512677S
	1997.04-2000.05		Centre	Estate RWD 113944		Center Bearing Support	538666
	1997.04-2000.05		Front;Rear	Estate RWD 113944		Flexible Coupling	512677
	1997.04-2000.05		Front;Rear	Estate RWD 113944		Flexible Coupling Kit	512677S
C450 AMG							
3.0 (270 kw)	2015.04-2018.05	AT	Front	Saloon 4WD 276823	For Model year:2016	Propshaft	PS900357
	2015.04-2018.05		Front	Estate 4WD 276823		Flexible Coupling	537630
	2015.04-2018.05		Front	Saloon 4WD 276823		Flexible Coupling	537630
	2015.04-2018.05		Front;Rear	Estate 4WD 276823	Inner diameter:49.5mm	Flexible Coupling	512678
	2015.04-2018.05		Front;Rear	Saloon 4WD 276823	Inner diameter:49.5mm	Flexible Coupling	512678

	YEAR	TRANSM.	FITTING POSITION	BODY STYLE & DRIVE TYPE & ENGINE	REMARKS	PRODUCT	GSP Ref.
MERCEDES-BENZ							
C450 AMG							
3.0 (270 kw)	2015.04-2018.05		Front;Rear	Estate 4WD 276823	Inner diameter:48.5mm	Flexible Coupling	537627
	2015.04-2018.05		Front;Rear	Saloon 4WD 276823	Inner diameter:48.5mm	Flexible Coupling	537627
	2015.04-2018.05		Front;Rear	Estate 4WD 276823	Inner diameter:50mm	Flexible Coupling Kit	512673S
	2015.04-2018.05		Front;Rear	Saloon 4WD 276823	Inner diameter:50mm	Flexible Coupling Kit	512673S
	2015.04-2018.05		Front;Rear	Estate 4WD 276823	Inner diameter:48.5mm	Flexible Coupling Kit	537627S
	2015.04-2018.05		Front;Rear	Saloon 4WD 276823	Inner diameter:48.5mm	Flexible Coupling Kit	537627S
	2015.04-2018.05		Front;Rear	Estate 4WD 276823		Flexible Coupling Kit	537630S
	2015.04-2018.05		Front;Rear	Saloon 4WD 276823		Flexible Coupling Kit	537630S
C55 AMG							
5.4 (270 kw)	2003.08-2007.02		Centre	Saloon RWD 113988		Center Bearing Support	538639
	2003.08-2007.02		Front	Saloon RWD 113988		Flexible Coupling	512676
	2003.08-2007.02		Rear	Saloon RWD 113988		Flexible Coupling	538513
	2003.08-2007.02		Rear	Saloon RWD 113988		Flexible Coupling Kit	538513S
	2003.08-2007.11		Centre	Estate RWD 113988		Center Bearing Support	538639
	2003.08-2007.11		Rear	Estate RWD 113988		Flexible Coupling	538513
	2003.08-2007.11		Rear	Estate RWD 113988		Flexible Coupling Kit	538513S
C63 AMG							
4.0 (350 kw)	2014.10-2021.02		Front	Estate RWD 177980	7AT	Flexible Coupling	533884
	2014.10-2021.02		Rear	Estate RWD 177980	7AT	Flexible Coupling	537843
	2014.10-2021.02		Front;Rear	Estate RWD 177980	9AT	Flexible Coupling	537851
	2014.10-2021.05		Front	Saloon RWD 177980	7AT	Flexible Coupling	533884
	2014.10-2021.05		Rear	Saloon RWD 177980	7AT	Flexible Coupling	537843
	2014.10-2021.05		Front;Rear	Saloon RWD 177980	9AT	Flexible Coupling	537851
	2016.02-2023.04		Front	Coupe RWD 177980	7AT	Flexible Coupling	533884
	2016.02-2023.04		Rear	Coupe RWD 177980	7AT	Flexible Coupling	537843
	2016.02-2023.04		Front;Rear	Coupe RWD 177980	9AT	Flexible Coupling	537851
	2016.02-2023.04		Front;Rear	Coupe RWD 177980		Flexible Coupling Kit	537832S
	2016.10-2023.04		Front	Cabriolet RWD 177980	7AT	Flexible Coupling	533884
	2016.10-2023.04		Rear	Cabriolet RWD 177980	7AT	Flexible Coupling	537843
	2016.10-2023.04		Front;Rear	Cabriolet RWD 177980	9AT	Flexible Coupling	537851
	2016.10-2023.04		Front;Rear	Cabriolet RWD 177980		Flexible Coupling Kit	537832S
4.0 (375 kw)	2014.10-2021.02		Front	Estate RWD 177980	7AT	Flexible Coupling	533884
	2014.10-2021.02		Rear	Estate RWD 177980	7AT	Flexible Coupling	537843
	2014.10-2021.02		Front;Rear	Estate RWD 177980	9AT	Flexible Coupling	537851
	2014.10-2021.05		Front	Saloon RWD 177980	7AT	Flexible Coupling	533884
	2014.10-2021.05		Rear	Saloon RWD 177980	7AT	Flexible Coupling	537843
	2014.10-2021.05		Front;Rear	Saloon RWD 177980	9AT	Flexible Coupling	537851
	2016.02-2023.04		Front	Coupe RWD 177980	7AT	Flexible Coupling	533884
	2016.02-2023.04		Rear	Coupe RWD 177980	7AT	Flexible Coupling	537843
	2016.02-2023.04		Front;Rear	Coupe RWD 177980	9AT	Flexible Coupling	537851
	2016.10-2023.04		Front	Cabriolet RWD 177980	7AT	Flexible Coupling	533884
	2016.10-2023.04		Rear	Cabriolet RWD 177980	7AT	Flexible Coupling	537843
	2016.10-2023.04		Front;Rear	Cabriolet RWD 177980	9AT	Flexible Coupling	537851
	2016.10-2023.04		Front;Rear	Cabriolet RWD 177980		Flexible Coupling Kit	537832S
6.2 (336 kw)	2007.08-2014.01		Centre	Saloon RWD 156985		Center Bearing Support	538668
	2007.08-2014.01		Rear	Saloon RWD 156985		Flexible Coupling	537843
	2007.08-2014.01		Front;Rear	Saloon RWD 156985		Flexible Coupling	533884
	2007.08-2014.01		Rear	Saloon RWD 156985		Flexible Coupling Kit	533884S
	2007.08-2014.01		Front;Rear	Saloon RWD 156985		Flexible Coupling Kit	537832S
	2008.02-2014.08		Centre	Estate RWD 156985		Center Bearing Support	538668
	2008.02-2014.08		Rear	Estate RWD 156985		Flexible Coupling	537843
	2008.02-2014.08		Front;Rear	Estate RWD 156985		Flexible Coupling	533884
	2008.02-2014.08		Rear	Estate RWD 156985		Flexible Coupling Kit	533884S
	2008.02-2014.08		Front;Rear	Estate RWD 156985		Flexible Coupling Kit	537832S
	2011.06-2014.01		Centre	Coupe RWD 156985		Center Bearing Support	538668
	2011.06-2014.01		Rear	Coupe RWD 156985		Flexible Coupling Kit	533884S
	2011.06-2014.01		Front;Rear	Coupe RWD 156985		Flexible Coupling Kit	537832S
6.2 (358 kw)	2011.01-2014.01		Centre	Saloon RWD 156985		Center Bearing Support	538668
	2011.01-2014.01		Centre	Coupe RWD 156985		Center Bearing Support	538668
	2011.01-2014.01		Rear	Saloon RWD 156985		Flexible Coupling	537843
	2011.01-2014.01		Front;Rear	Saloon RWD 156985		Flexible Coupling	533884
	2011.01-2014.01		Rear	Saloon RWD 156985		Flexible Coupling Kit	533884S
	2011.01-2014.01		Rear	Coupe RWD 156985		Flexible Coupling Kit	533884S
	2011.01-2014.01		Front;Rear	Saloon RWD 156985		Flexible Coupling Kit	537832S

	YEAR	TRANSM.	FITTING POSITION	BODY STYLE & DRIVE TYPE & ENGINE	REMARKS	PRODUCT	GSP Ref.
MERCEDES-BENZ							
C63 AMG							
6.2 (358 kw)	2011.01-2014.01		Front;Rear	Coupe RWD 156985		Flexible Coupling Kit	537832S
	2011.01-2014.08		Centre	Estate RWD 156985		Center Bearing Support	538668
	2011.01-2014.08		Rear	Estate RWD 156985		Flexible Coupling	537843
	2011.01-2014.08		Front;Rear	Estate RWD 156985		Flexible Coupling	533884
	2011.01-2014.08		Rear	Estate RWD 156985		Flexible Coupling Kit	533884S
	2011.01-2014.08		Front;Rear	Estate RWD 156985		Flexible Coupling Kit	537832S
6.2 (373 kw)	2013.05-2014.01		Centre	Coupe RWD 156985		Center Bearing Support	538668
	2013.05-2014.01		Centre	Saloon RWD 156985		Center Bearing Support	538668
	2013.05-2014.01		Rear	Saloon RWD 156985		Flexible Coupling	537843
	2013.05-2014.01		Front;Rear	Saloon RWD 156985		Flexible Coupling	533884
	2013.05-2014.01		Rear	Coupe RWD 156985		Flexible Coupling Kit	533884S
	2013.05-2014.01		Front;Rear	Coupe RWD 156985		Flexible Coupling Kit	537832S
	2013.05-2014.01		Front;Rear	Saloon RWD 156985		Flexible Coupling Kit	537832S
	2013.06-2014.08		Centre	Estate RWD 156985		Center Bearing Support	538668
6.2 (380 kw)	2012.01-2014.01		Centre	Coupe RWD 156985		Center Bearing Support	538668
	2012.01-2014.01		Rear	Coupe RWD 156985		Flexible Coupling Kit	533884S
	2012.01-2014.01		Front;Rear	Coupe RWD 156985		Flexible Coupling Kit	537832S
6.2 (383 kw)	2010.07-2011.08		Centre	Estate RWD 156985		Center Bearing Support	538668
	2010.07-2011.08		Centre	Saloon RWD 156985		Center Bearing Support	538668
CL420							
4.2 (205 kw)	1996.07-1999.09		Front	Coupe RWD 119971/119981		Flexible Coupling	512672
	1996.07-1999.09		Front;Rear	Coupe RWD 119971/119981		Flexible Coupling	512677
	1996.07-1999.09		Rear	Coupe RWD 119971/119981	512672S and 537889S different accessory	Flexible Coupling Kit	512672S
	1996.07-1999.09		Rear	Coupe RWD 119971/119981	537889S and 512672S different accessory	Flexible Coupling Kit	537889S
	1996.07-1999.09		Front;Rear	Coupe RWD 119971/119981		Flexible Coupling Kit	512677S
CL500							
4.7 (320 kw)	2010.10-2013.12		Front;Rear	Coupe 4WD 278920		Flexible Coupling	512677
	2010.10-2013.12		Front;Rear	Coupe 4WD 278920		Flexible Coupling Kit	512677S
5.0 (225 kw)	1999.09-2006.12		Centre	Coupe RWD 113960	Height:57.7mm	Center Bearing Support	538667
	1999.09-2006.12		Front;Rear	Coupe RWD 113960		Flexible Coupling	512677
	1999.09-2006.12		Front;Rear	Coupe RWD 113960		Flexible Coupling Kit	512677S
	1999.09-2006.12		Front;Rear	Coupe RWD 113960	7AT	Flexible Coupling Kit	537794S
5.0 (235 kw)	1996.07-1999.03		Front	Coupe RWD 119970		Flexible Coupling	512672
	1996.07-1999.03		Front;Rear	Coupe RWD 119970		Flexible Coupling	512677
	1996.07-1999.03		Rear	Coupe RWD 119970	512672S and 537889S different accessory	Flexible Coupling Kit	512672S
	1996.07-1999.03		Rear	Coupe RWD 119970	537889S and 512672S different accessory	Flexible Coupling Kit	537889S
	1996.07-1999.03		Front;Rear	Coupe RWD 119970		Flexible Coupling Kit	512677S
5.5 (285 kw)	2006.08-2013.12		Front;Rear	Coupe RWD 273961		Flexible Coupling	533884
	2006.08-2013.12		Front;Rear	Coupe RWD 273961		Flexible Coupling Kit	537832S
	2008.02-2013.12		Front;Rear	Coupe 4WD 273968		Flexible Coupling	512678
	2008.02-2013.12		Front;Rear	Coupe 4WD 273968		Flexible Coupling Kit	512673S
CL55 AMG							
5.4 (265 kw)	2000.04-2002.07		Centre	Coupe RWD 113986	Height:57.7mm	Center Bearing Support	538667
	2000.04-2002.07		Front	Coupe RWD 113986		Flexible Coupling	512676
5.4 (368 kw)	2002.08-2006.12		Centre	Coupe RWD 113991		Center Bearing Support	538667
	2002.08-2006.12		Front;Rear	Coupe RWD 113991		Flexible Coupling	533884
	2002.08-2006.12		Front;Rear	Coupe RWD 113991		Flexible Coupling Kit	537832S
CL600							
5.5 (368 kw)	2002.08-2006.07		Front;Rear	Coupe RWD 275950		Flexible Coupling	533884
	2002.08-2006.07		Front;Rear	Coupe RWD 275950		Flexible Coupling Kit	537832S
5.5 (380 kw)	2006.08-2013.12		Front;Rear	Coupe RWD 275953		Flexible Coupling	533884
	2006.08-2013.12		Front;Rear	Coupe RWD 275953		Flexible Coupling Kit	537832S
5.8 (270 kw)	1999.09-2002.12		Centre	Coupe RWD 137970		Center Bearing Support	538667
	1999.09-2002.12		Front	Coupe RWD 137970		Flexible Coupling	512676
6.0 (290 kw)	1996.07-1999.08		Front	Coupe RWD 120982		Flexible Coupling	512676
CL63 AMG							
6.2 (386 kw)	2006.10-2013.12		Front;Rear	Coupe RWD 156984		Flexible Coupling	533884
	2006.10-2013.12		Front;Rear	Coupe RWD 156984		Flexible Coupling Kit	537832S
CL65 AMG							
6.0 (450 kw)	2003.04-2006.12		Front;Rear	Coupe RWD 275980		Flexible Coupling	533884
	2003.04-2006.12		Front;Rear	Coupe RWD 275980		Flexible Coupling Kit	537832S
	2006.10-2010.12		Front;Rear	Coupe RWD 275982		Flexible Coupling	533884
	2006.10-2010.12		Front;Rear	Coupe RWD 275982		Flexible Coupling Kit	537832S

	YEAR	TRANSM.	FITTING POSITION	BODY STYLE & DRIVE TYPE & ENGINE	REMARKS	PRODUCT	GSP Ref.
MERCEDES-BENZ							
CL65 AMG							
6.0 (463 kw)	2011.02-2013.12		Front;Rear	Coupe RWD 275982		Flexible Coupling	533884
	2011.02-2013.12		Front;Rear	Coupe RWD 275982		Flexible Coupling Kit	537832S
CLA180							
1.5 (80 kw)	2013.10-2018.05		Centre	Coupe FWD 607951		Center Bearing Support	538648
	2013.10-2018.05		Front	Coupe FWD 607951		Flexible Coupling Kit	537796S
	2015.07-2018.05		Centre	Estate FWD 607951		Center Bearing Support	538648
	2015.07-2018.05		Front	Estate FWD 607951		Flexible Coupling Kit	537796S
1.6 (90 kw)	2013.01-2019.03		Centre	Coupe FWD 270910		Center Bearing Support	538648
	2013.01-2019.03		Front	Coupe FWD 270910		Flexible Coupling Kit	537796S
	2015.01-2019.03		Centre	Estate FWD 270910		Center Bearing Support	538648
	2015.01-2019.03		Front	Estate FWD 270910		Flexible Coupling Kit	537796S
CLA200							
1.3 (120 kw)	2020.10-	DCT	Rear	Coupe 4WD 282914		Propshaft	PS901952
1.6 (110 kw)	2018.07-2019.03		Front	Coupe FWD 270910		Flexible Coupling Kit	537796S
1.6 (115 kw)	2013.01-2019.03		Centre	Coupe FWD 270910		Center Bearing Support	538648
	2013.01-2019.03		Front	Coupe FWD 270910		Flexible Coupling Kit	537796S
	2015.01-2019.03		Centre	Estate FWD 270910		Center Bearing Support	538648
	2015.01-2019.03		Front	Estate FWD 270910		Flexible Coupling Kit	537796S
	2015.06-2019.03		Front	Coupe FWD M 270.910		Flexible Coupling Kit	537796S
1.8 (100 kw)	2013.06-2014.08		Centre	Coupe FWD 651901		Center Bearing Support	538648
	2013.06-2014.08		Front	Coupe FWD 651901		Flexible Coupling Kit	537796S
2.0 (110 kw)	2019.10-	DCT	Rear	Estate 4WD 654920		Propshaft	PS901952
	2020.07-	DCT	Rear	Coupe 4WD 654920		Propshaft	PS901952
2.0 (135 kw)	2015.08-2019.03		Front	Coupe FWD M 270.920		Flexible Coupling Kit	537796S
2.2 (100 kw)	2014.07-2019.03		Centre	Coupe 4WD 651930		Center Bearing Support	538648
	2014.07-2019.03		Centre	Coupe FWD 651930		Center Bearing Support	538648
	2014.07-2019.03		Rear	Coupe 4WD 651930		Flexible Coupling	537818
	2014.07-2019.03		Front	Coupe 4WD 651930		Flexible Coupling Kit	537796S
	2014.07-2019.03		Front	Coupe FWD 651930		Flexible Coupling Kit	537796S
	2015.01-2019.03		Centre	Estate FWD 651930		Center Bearing Support	538648
	2015.01-2019.03		Rear	Estate 4WD 651930		Flexible Coupling	537818
	2015.01-2019.03		Front	Estate 4WD 651930		Flexible Coupling Kit	537796S
	2015.01-2019.03		Front	Estate FWD 651930		Flexible Coupling Kit	537796S
CLA220							
2.0 (135 kw)	2015.01-2019.03		Centre	Coupe 4WD 270920		Center Bearing Support	538648
	2015.01-2019.03		Rear	Coupe 4WD 270920		Flexible Coupling	537818
	2015.01-2019.03		Front	Coupe 4WD 270920		Flexible Coupling Kit	537796S
	2016.04-2019.03		Rear	Estate 4WD 270920		Flexible Coupling	537818
	2016.04-2019.03		Front	Estate 4WD 270920		Flexible Coupling Kit	537796S
	2016.04-2019.03		Front	Coupe FWD M 270.920		Flexible Coupling Kit	537796S
2.0 (140 kw)	2019.03-	DCT	Rear	Coupe 4WD 260920		Propshaft	PS901952
	2019.03-		Rear	Coupe 4WD 260920		Flexible Coupling	537818
	2019.10-	DCT	Rear	Estate 4WD 654920		Propshaft	PS901952
	2020.07-	DCT	Rear	Coupe 4WD 654920		Propshaft	PS901952
2.2 (120 kw)	2013.01-2019.03		Centre	Coupe FWD 651930		Center Bearing Support	538648
	2013.01-2019.03		Front	Coupe FWD 651930		Flexible Coupling Kit	537796S
	2014.08-2019.03		Rear	Coupe 4WD 651930		Flexible Coupling	537818
	2014.08-2019.03		Front	Coupe 4WD 651930		Flexible Coupling Kit	537796S
	2015.01-2019.03		Front	Estate FWD 651930		Flexible Coupling Kit	537796S
	2015.09-2019.03		Rear	Estate 4WD 651930		Flexible Coupling	537818
	2015.09-2019.03		Front	Estate 4WD 651930		Flexible Coupling Kit	537796S
2.2 (125 kw)	2013.01-2019.03		Centre	Coupe FWD 651930		Center Bearing Support	538648
	2013.01-2019.03		Front	Coupe FWD 651930		Flexible Coupling Kit	537796S
	2014.07-2019.03		Centre	Coupe 4WD 651930		Center Bearing Support	538648
	2014.07-2019.03		Rear	Coupe 4WD 651930		Flexible Coupling	537818
	2014.07-2019.03		Front	Coupe 4WD 651930		Flexible Coupling Kit	537796S
	2018.07-2019.03		Rear	Estate 4WD 651930		Flexible Coupling	537818
	2018.07-2019.03		Front	Estate 4WD 651930		Flexible Coupling Kit	537796S
	2018.07-2019.03		Front	Estate FWD 651930		Flexible Coupling Kit	537796S
2.2 (130 kw)	2014.09-2019.03		Centre	Coupe FWD 651930		Center Bearing Support	538648
	2014.09-2019.03		Rear	Coupe 4WD 651930		Flexible Coupling	537818
	2014.09-2019.03		Front	Coupe 4WD 651930		Flexible Coupling Kit	537796S
	2014.09-2019.03		Front	Coupe FWD 651930		Flexible Coupling Kit	537796S
	2015.01-2019.03		Centre	Estate FWD 651930		Center Bearing Support	538648

	YEAR	TRANSM.	FITTING POSITION	BODY STYLE & DRIVE TYPE & ENGINE	REMARKS	PRODUCT	GSP Ref.
MERCEDES-BENZ							
CLA220							
2.2 (130 kw)	2015.01-2019.03		Rear	Estate 4WD 651930		Flexible Coupling	537818
	2015.01-2019.03		Front	Estate FWD 651930		Flexible Coupling Kit	537796S
	2015.01-2019.03		Front	Estate 4WD 651930		Flexible Coupling Kit	537796S
CLA250							
2.0 (155 kw)	2013.01-2019.03		Centre	Coupe FWD 270920		Center Bearing Support	538648
	2013.01-2019.03		Front	Coupe FWD 270920		Flexible Coupling Kit	537796S
	2013.07-2019.03		Centre	Coupe 4WD 270920		Center Bearing Support	538648
	2013.07-2019.03		Rear	Coupe 4WD 270920		Flexible Coupling	537818
	2013.07-2019.03		Front	Coupe 4WD 270920		Flexible Coupling Kit	537796S
	2015.01-2019.03		Centre	Estate FWD 270920		Center Bearing Support	538648
	2015.01-2019.03		Rear	Estate 4WD 270920		Flexible Coupling	537818
	2015.01-2019.03		Front	Estate FWD 270920		Flexible Coupling Kit	537796S
	2015.01-2019.03		Front	Estate 4WD 270920		Flexible Coupling Kit	537796S
2.0 (160 kw)	2015.07-2019.03		Centre	Coupe FWD 270920		Center Bearing Support	538648
	2015.07-2019.03		Rear	Coupe 4WD 270920		Flexible Coupling	537818
	2015.07-2019.03		Rear	Estate 4WD 270920		Flexible Coupling	537818
	2015.07-2019.03		Front	Coupe FWD 270920		Flexible Coupling Kit	537796S
	2015.07-2019.03		Front	Coupe 4WD 270920		Flexible Coupling Kit	537796S
	2015.07-2019.03		Front	Estate 4WD 270920		Flexible Coupling Kit	537796S
2.0 (165 kw)	2019.03-	DCT	Rear	Coupe 4WD 260920		Propshaft	PS901952
	2019.03-		Rear	Coupe 4WD 260920		Flexible Coupling	537818
	2019.06-	DCT	Rear	Estate 4WD 260920		Propshaft	PS901952
	2019.06-		Rear	Estate 4WD 260920		Flexible Coupling	537818
CLA35 AMG							
2.0 (225 kw)	2019.04-	DCT	Rear	Coupe 4WD 260920		Propshaft	PS901952
	2019.04-		Rear	Coupe 4WD 260920		Flexible Coupling	537818
	2019.06-	DCT	Rear	Estate 4WD 260920		Propshaft	PS901952
	2019.06-		Rear	Estate 4WD 260920		Flexible Coupling	537818
CLA45 AMG							
2.0 (265 kw)	2013.07-2019.03		Rear	Coupe 4WD 133980		Flexible Coupling	537818
	2015.01-2015.07		Rear	Estate 4WD 133980		Flexible Coupling	537818
2.0 (280 kw)	2015.07-2019.03		Rear	Estate 4WD 133980		Flexible Coupling	537818
	2015.07-2019.03		Rear	Coupe 4WD 133980		Flexible Coupling	537818
2.0 (285 kw)	2019.07-		Rear	Coupe 4WD 139980		Flexible Coupling	537818
	2019.07-		Rear	Estate 4WD 139980		Flexible Coupling	537818
2.0 (310 kw)	2019.07-		Rear	Coupe 4WD 139980		Flexible Coupling	537818
	2019.07-		Rear	Estate 4WD 139980		Flexible Coupling	537818
CLC160							
1.6 (95 kw)	2009.02-2011.06		Centre	Coupe RWD 271911	with bearing	Center Bearing Support	538639
	2009.02-2011.06		Front;Rear	Coupe RWD 271911		Flexible Coupling	512678
	2009.02-2011.06		Front;Rear	Coupe RWD 271911		Flexible Coupling Kit	512673S
CLC180							
1.8 (105 kw)	2008.05-2011.06		Centre	Coupe RWD 271946	with bearing	Center Bearing Support	538639
	2008.05-2011.06		Front;Rear	Coupe RWD 271946		Flexible Coupling	512678
	2008.05-2011.06		Front;Rear	Coupe RWD 271946		Flexible Coupling Kit	512673S
CLC200							
1.8 (135 kw)	2008.05-2011.06		Centre	Coupe RWD 271957	with bearing	Center Bearing Support	538639
	2008.05-2011.06		Front;Rear	Coupe RWD 271957		Flexible Coupling	512678
	2008.05-2011.06		Front;Rear	Coupe RWD 271957		Flexible Coupling Kit	512673S
2.2 (90 kw)	2008.05-2011.06		Front;Rear	Coupe RWD 646962/646963		Flexible Coupling	512678
	2008.05-2011.06		Front;Rear	Coupe RWD 646962/646963		Flexible Coupling Kit	512673S
CLC220							
2.2 (100 kw)	2008.05-2011.06		Centre	Coupe RWD 646963		Center Bearing Support	538639
2.2 (110 kw)	2008.05-2011.06		Centre	Coupe RWD 646963		Center Bearing Support	538639
	2008.05-2011.06		Front;Rear	Coupe RWD 646963		Flexible Coupling	512677
	2008.05-2011.06		Front;Rear	Coupe RWD 646963		Flexible Coupling Kit	512677S
	2008.05-2011.06		Front;Rear	Coupe RWD 646963		Flexible Coupling Kit	537794S
CLC230							
2.5 (150 kw)	2008.05-2011.06		Centre	Coupe RWD 272920	with bearing	Center Bearing Support	538639
	2008.05-2011.06		Front;Rear	Coupe RWD 272920		Flexible Coupling	512678
	2008.05-2011.06		Front;Rear	Coupe RWD 272920		Flexible Coupling Kit	512673S
CLC250							
2.5 (150 kw)	2009.06-2011.06		Front;Rear	Coupe RWD 272920		Flexible Coupling	512678
	2009.06-2011.06		Front;Rear	Coupe RWD 272920		Flexible Coupling Kit	512673S

	YEAR	TRANSM.	FITTING POSITION	BODY STYLE & DRIVE TYPE & ENGINE	REMARKS	PRODUCT	GSP Ref.
MERCEDES-BENZ							
CLC350							
3.5 (200 kw)	2008.05-2011.06		Front;Rear	Coupe RWD 272960		Flexible Coupling	512677
	2008.05-2011.06		Front;Rear	Coupe RWD 272960		Flexible Coupling Kit	512677S
	2008.05-2011.06		Front;Rear	Coupe RWD 272960		Flexible Coupling Kit	537794S
CLE200							
2.0 (150 kw)	2023.10-		Front;Rear	Coupe 4WD M 254.920		Flexible Coupling	537627
	2024.02-		Front;Rear	Convertible 4WD M 254.920		Flexible Coupling	537627
CLE300							
2.0 (190 kw)	2023.10-		Front;Rear	Coupe 4WD 254920		Flexible Coupling	537627
	2024.02-		Front;Rear	Convertible 4WD M 254.920		Flexible Coupling	537627
CLE450							
3.0 (280 kw)	2023.10-		Front;Rear	Coupe 4WD 256.830		Flexible Coupling	537627
	2024.02-		Front;Rear	Convertible 4WD 256.830		Flexible Coupling	537627
CLK200							
1.8 (120 kw)	2002.08-2006.05		Centre	Coupe RWD 271940	with bearing	Center Bearing Support	538639
	2002.08-2006.05		Front;Rear	Coupe RWD 271940		Flexible Coupling	512678
	2002.08-2006.05		Front;Rear	Coupe RWD 271940		Flexible Coupling Kit	512673S
	2003.02-2010.03		Centre	Cabriolet RWD 271940	with bearing	Center Bearing Support	538639
	2003.02-2010.03		Front;Rear	Cabriolet RWD 271940		Flexible Coupling	512678
	2003.02-2010.03		Front;Rear	Cabriolet RWD 271940		Flexible Coupling Kit	512673S
1.8 (125 kw)	2002.08-2005.07		Centre	Coupe RWD 271942	with bearing	Center Bearing Support	538639
	2002.08-2005.07		Front;Rear	Coupe RWD 271942		Flexible Coupling	512678
	2002.08-2005.07		Front;Rear	Coupe RWD 271942		Flexible Coupling Kit	512673S
	2003.07-2010.03		Front;Rear	Cabriolet RWD 271942		Flexible Coupling	512678
	2003.07-2010.03		Front;Rear	Cabriolet RWD 271942		Flexible Coupling Kit	512673S
1.8 (135 kw)	2007.05-2010.03		Centre	Cabriolet RWD 271955	with bearing	Center Bearing Support	538639
	2007.05-2010.03		Front;Rear	Cabriolet RWD 271955		Flexible Coupling	512678
	2007.05-2010.03		Front;Rear	Cabriolet RWD 271955		Flexible Coupling Kit	512673S
	2007.05-2010.12		Centre	Coupe RWD 271955	with bearing	Center Bearing Support	538639
	2007.05-2010.12		Front;Rear	Coupe RWD 271955		Flexible Coupling	512678
	2007.05-2010.12		Front;Rear	Coupe RWD 271955		Flexible Coupling Kit	512673S
2.0 (100 kw)	1997.04-2000.05		Centre	Coupe RWD 111945		Center Bearing Support	538669
	1997.04-2000.05		Front	Coupe RWD 111945		Flexible Coupling	510569
	1997.04-2000.05		Front	Coupe RWD 111945	MT,for vehicles without air conditioning	Flexible Coupling	512326
	1997.04-2000.05		Front	Coupe RWD 111945	Inner diameter:37mm,510434S and 510578S different structure	Flexible Coupling Kit	510434S
	1997.04-2000.05		Front	Coupe RWD 111945	Inner diameter:37mm,510578S and 510434S different structure	Flexible Coupling Kit	510578S
	1997.04-2000.05		Front	Coupe RWD 111945	Inner diameter:41mm	Flexible Coupling Kit	537821S
	1997.04-2000.05		Rear	Coupe RWD 111945	Inner diameter:39mm	Flexible Coupling Kit	510570S
	1998.06-2002.03		Front	Cabriolet RWD 111945		Flexible Coupling	510569
	1998.06-2002.03		Front	Cabriolet RWD 111945	MT,for vehicles without air conditioning	Flexible Coupling	512326
	1998.06-2002.03		Front	Cabriolet RWD 111945		Flexible Coupling Kit	510578S
	1998.06-2002.03		Front	Cabriolet RWD 111945	AT;MT,for vehicles with air conditioning	Flexible Coupling Kit	537821S
	1998.06-2002.03		Rear	Cabriolet RWD 111945		Flexible Coupling Kit	510570S
2.0 (120 kw)	2000.06-2002.07		Centre	Cabriolet RWD 111956		Center Bearing Support	538666
	2000.06-2002.07		Centre	Coupe RWD 111956		Center Bearing Support	538666
	2000.06-2002.07		Front	Cabriolet RWD 111956		Flexible Coupling	510571
	2000.06-2002.07		Front	Coupe RWD 111956		Flexible Coupling	510571
	2000.06-2002.07		Front;Rear	Cabriolet RWD 111956		Flexible Coupling	512678
	2000.06-2002.07		Front;Rear	Coupe RWD 111956		Flexible Coupling	512678
	2000.06-2002.07		Front	Coupe RWD 111956	Inner diameter:37mm	Flexible Coupling Kit	510434S
	2000.06-2002.07		Front	Cabriolet RWD 111956		Flexible Coupling Kit	510571S
	2000.06-2002.07		Front	Coupe RWD 111956	Inner diameter:42mm	Flexible Coupling Kit	510571S
	2000.06-2002.07		Front;Rear	Cabriolet RWD 111956		Flexible Coupling Kit	512673S
	2000.06-2002.07		Front;Rear	Coupe RWD 111956		Flexible Coupling Kit	512673S
2.0 (141 kw)	1997.06-2000.06		Centre	Coupe RWD 111944		Center Bearing Support	538666
	1997.06-2000.06		Front	Coupe RWD 111944		Flexible Coupling	510571
	1997.06-2000.06		Front;Rear	Coupe RWD 111944		Flexible Coupling	510579
	1997.06-2000.06		Front	Coupe RWD 111944	Inner diameter:37mm	Flexible Coupling Kit	510434S
	1997.06-2000.06		Front	Coupe RWD 111944	Inner diameter:42mm	Flexible Coupling Kit	510571S
	1997.06-2000.06		Front	Coupe RWD 111944	Inner diameter:46.5mm,510580S and 537796S different accessory	Flexible Coupling Kit	510580S
	1997.06-2000.06		Front	Coupe RWD 111944		Flexible Coupling Kit	537796S
	1998.06-2000.06		Centre	Cabriolet RWD 111944		Center Bearing Support	538666
	1998.06-2000.06		Front	Cabriolet RWD 111944		Flexible Coupling	510571
	1998.06-2000.06		Front;Rear	Cabriolet RWD 111944		Flexible Coupling	510579
	1998.06-2000.06		Front	Cabriolet RWD 111944		Flexible Coupling Kit	510571S

	YEAR	TRANSM.	FITTING POSITION	BODY STYLE & DRIVE TYPE & ENGINE	REMARKS	PRODUCT	GSP Ref.
MERCEDES-BENZ							
CLK200							
2.0 (141 kw)	1998.06-2000.06		Front	Cabriolet RWD 111944		Flexible Coupling Kit	510580S
	1998.06-2000.06		Front	Cabriolet RWD 111944		Flexible Coupling Kit	537796S
	1998.06-2000.06		Front;Rear	Cabriolet RWD 111944		Flexible Coupling Kit	512673S
CLK220							
2.2 (100 kw)	2005.01-2009.05		Front;Rear	Coupe RWD 646966		Flexible Coupling	512677
	2005.01-2009.05		Front;Rear	Coupe RWD 646966		Flexible Coupling Kit	512677S
2.2 (110 kw)	2005.05-2010.12		Front;Rear	Coupe RWD 646966		Flexible Coupling	512677
	2005.05-2010.12		Front;Rear	Coupe RWD 646966		Flexible Coupling Kit	512677S
	2005.05-2010.12		Front;Rear	Coupe RWD 646966		Flexible Coupling Kit	537794S
CLK230							
2.3 (142 kw)	1997.04-2000.05		Centre	Coupe RWD 111975		Center Bearing Support	538666
	1997.04-2000.05		Front	Coupe RWD 111975		Flexible Coupling	510571
	1997.04-2000.05		Front;Rear	Coupe RWD 111975		Flexible Coupling	510579
	1997.04-2000.05		Front	Coupe RWD 111975	Inner diameter:37mm	Flexible Coupling Kit	510434S
	1997.04-2000.05		Front	Coupe RWD 111975	Inner diameter:42mm	Flexible Coupling Kit	510571S
	1997.04-2000.05		Front	Coupe RWD 111975	Inner diameter:46.5mm,510580S and 537796S different accessory	Flexible Coupling Kit	510580S
	1997.04-2000.05		Front	Coupe RWD 111975		Flexible Coupling Kit	537796S
	1998.06-2000.05		Centre	Cabriolet RWD 111975		Center Bearing Support	538666
	1998.06-2000.05		Front	Cabriolet RWD 111975	For OE No.124 411 05 15	Flexible Coupling	510571
	1998.06-2000.05		Front	Cabriolet RWD 111975	For OE No.1294110015	Flexible Coupling	512676
	1998.06-2000.05		Front;Rear	Cabriolet RWD 111975		Flexible Coupling	510579
	1998.06-2000.05		Front	Cabriolet RWD 111975		Flexible Coupling Kit	510571S
	1998.06-2000.05		Front	Cabriolet RWD 111975		Flexible Coupling Kit	510580S
	1998.06-2000.05		Front	Cabriolet RWD 111975		Flexible Coupling Kit	537796S
2.3 (145 kw)	1999.09-2002.07		Centre	Cabriolet RWD 111982		Center Bearing Support	538666
	1999.09-2002.07		Front	Cabriolet RWD 111982		Flexible Coupling	510571
	1999.09-2002.07		Front;Rear	Cabriolet RWD 111982		Flexible Coupling	512678
	1999.09-2002.07		Front	Cabriolet RWD 111982		Flexible Coupling Kit	510571S
	1999.09-2002.07		Front;Rear	Cabriolet RWD 111982		Flexible Coupling Kit	512673S
	1999.09-2003.01		Centre	Coupe RWD 111982		Center Bearing Support	538666
	1999.09-2003.01		Front	Coupe RWD 111982		Flexible Coupling	510571
	1999.09-2003.01		Front;Rear	Coupe RWD 111982		Flexible Coupling	512678
	1999.09-2003.01		Front	Coupe RWD 111982	Inner diameter:37mm	Flexible Coupling Kit	510434S
	1999.09-2003.01		Front	Coupe RWD 111982	Inner diameter:42mm	Flexible Coupling Kit	510571S
	1999.09-2003.01		Front;Rear	Coupe RWD 111982		Flexible Coupling Kit	512673S
CLK240							
2.6 (120 kw)	2002.06-2005.07		Front;Rear	Coupe RWD 112912		Flexible Coupling	512678
	2002.06-2005.07		Front;Rear	Coupe RWD 112912		Flexible Coupling Kit	512673S
2.6 (125 kw)	2002.08-2005.07		Centre	Coupe RWD 112912	with bearing	Center Bearing Support	538639
	2002.08-2005.07		Front	Coupe RWD 112912	not for 5AT	Flexible Coupling	538111
	2002.08-2005.07		Front;Rear	Coupe RWD 112912	MT,AT	Flexible Coupling	512678
	2002.08-2005.07		Front;Rear	Coupe RWD 112912		Flexible Coupling Kit	512673S
	2003.02-2005.07		Centre	Cabriolet RWD 112912	with bearing	Center Bearing Support	538639
	2003.02-2005.07		Front	Cabriolet RWD 112912	not for 5AT	Flexible Coupling	538111
	2003.02-2005.07		Front;Rear	Cabriolet RWD 112912	5AT	Flexible Coupling	512678
	2003.02-2005.07		Front;Rear	Cabriolet RWD 112912		Flexible Coupling Kit	512673S
CLK270							
2.7 (120 kw)	2003.02-2005.06		Front;Rear	Coupe RWD 612962/612967		Flexible Coupling	512677
	2003.02-2005.06		Front;Rear	Coupe RWD 612962/612967		Flexible Coupling Kit	512677S
2.7 (125 kw)	2002.08-2005.07		Front;Rear	Coupe RWD 612962/612967		Flexible Coupling	512677
	2002.08-2005.07		Front;Rear	Coupe RWD 612962/612967		Flexible Coupling Kit	512677S
	2002.08-2005.07		Front;Rear	Coupe RWD 612962/612967		Flexible Coupling Kit	537794S
CLK280							
3.0 (170 kw)	2005.03-2010.03		Front;Rear	Cabriolet RWD 272940		Flexible Coupling	512678
	2005.03-2010.03		Front;Rear	Cabriolet RWD 272940		Flexible Coupling Kit	512673S
	2005.03-2010.12		Front;Rear	Coupe RWD 272940		Flexible Coupling	512678
	2005.03-2010.12		Front;Rear	Coupe RWD 272940		Flexible Coupling Kit	512673S
CLK320							
3.0 (165 kw)	2005.03-2010.03		Front;Rear	Cabriolet RWD 642910	6MT	Flexible Coupling	512677
	2005.03-2010.03		Front;Rear	Cabriolet RWD 642910	AT	Flexible Coupling	533884
	2005.03-2010.03		Front;Rear	Cabriolet RWD 642910		Flexible Coupling Kit	512677S
	2005.03-2010.03		Front;Rear	Cabriolet RWD 642910	6MT	Flexible Coupling Kit	537794S
	2005.03-2010.03		Front;Rear	Cabriolet RWD 642910	AT	Flexible Coupling Kit	537832S
	2005.03-2010.12		Front;Rear	Coupe RWD 642910	6MT	Flexible Coupling	512677

	YEAR	TRANSM.	FITTING POSITION	BODY STYLE & DRIVE TYPE & ENGINE	REMARKS	PRODUCT	GSP Ref.
MERCEDES-BENZ							
CLK320							
3.0 (165 kw)	2005.03-2010.12		Front;Rear	Coupe RWD 642910	AT	Flexible Coupling	533884
	2005.03-2010.12		Front;Rear	Coupe RWD 642910		Flexible Coupling Kit	512677S
	2005.03-2010.12		Front;Rear	Coupe RWD 642910	6MT	Flexible Coupling Kit	537794S
	2005.03-2010.12		Front;Rear	Coupe RWD 642910	AT	Flexible Coupling Kit	537832S
3.2 (160 kw)	1997.04-2002.07		Centre	Coupe RWD 112940		Center Bearing Support	538666
	1997.04-2002.07		Front;Rear	Coupe RWD 112940		Flexible Coupling	510579
	1997.04-2002.07		Front	Coupe RWD 112940	Inner diameter:37mm	Flexible Coupling Kit	510434S
	1997.04-2002.07		Front	Coupe RWD 112940	Inner diameter:46.5mm	Flexible Coupling Kit	510580S
	1999.01-2003.12		Centre	Cabriolet RWD 112940		Center Bearing Support	538666
	1999.01-2003.12		Front;Rear	Cabriolet RWD 112940		Flexible Coupling	510579
	1999.01-2003.12		Front	Cabriolet RWD 112940		Flexible Coupling Kit	510580S
	2002.08-2005.07		Centre	Coupe RWD 112955	with bearing	Center Bearing Support	538639
	2002.08-2005.07		Front;Rear	Coupe RWD 112955		Flexible Coupling	512678
	2002.08-2005.07		Front;Rear	Coupe RWD 112955		Flexible Coupling Kit	512673S
	2003.01-2005.12		Centre	Cabriolet RWD 112955	with bearing	Center Bearing Support	538639
	2003.01-2005.12		Front;Rear	Cabriolet RWD 112955		Flexible Coupling	512678
	2003.01-2005.12		Front;Rear	Cabriolet RWD 112955		Flexible Coupling Kit	512673S
CLK350							
3.5 (200 kw)	2005.03-2010.03		Front;Rear	Cabriolet RWD 272960	7AT	Flexible Coupling	512677
	2005.03-2010.03		Front;Rear	Cabriolet RWD 272960		Flexible Coupling Kit	512677S
	2005.03-2010.03		Front;Rear	Cabriolet RWD 272960	7AT	Flexible Coupling Kit	537794S
	2005.03-2010.12		Front;Rear	Coupe RWD 272960	7AT	Flexible Coupling	512677
	2005.03-2010.12		Front;Rear	Coupe RWD 272960		Flexible Coupling Kit	512677S
	2005.03-2010.12		Front;Rear	Coupe RWD 272960	7AT	Flexible Coupling Kit	537794S
CLK430							
4.3 (205 kw)	1997.04-2003.07		Centre	Coupe RWD 113943		Center Bearing Support	538666
	1997.04-2003.07		Front;Rear	Coupe RWD 113943		Flexible Coupling	512677
	1997.04-2003.07		Front	Coupe RWD 113943		Flexible Coupling Kit	510434S
	1997.04-2003.07		Front;Rear	Coupe RWD 113943		Flexible Coupling Kit	512677S
	1999.08-2003.01		Centre	Cabriolet RWD 113943		Center Bearing Support	538666
	1999.08-2003.01		Front;Rear	Cabriolet RWD 113943		Flexible Coupling	512677
	1999.08-2003.01		Front;Rear	Cabriolet RWD 113943		Flexible Coupling Kit	512677S
CLK500							
5.0 (225 kw)	2002.06-2009.05		Front;Rear	Coupe RWD 113968	5AT;7AT	Flexible Coupling	512677
	2002.06-2009.05		Front;Rear	Coupe RWD 113968		Flexible Coupling Kit	512677S
	2002.06-2009.05		Front;Rear	Coupe RWD 113968	5AT;7AT	Flexible Coupling Kit	537794S
	2003.02-2006.12		Front;Rear	Cabriolet RWD 113968	5AT;7AT	Flexible Coupling	512677
	2003.02-2006.12		Front;Rear	Cabriolet RWD 113968		Flexible Coupling Kit	512677S
	2003.02-2006.12		Front;Rear	Cabriolet RWD 113968	5AT;7AT	Flexible Coupling Kit	537794S
5.5 (285 kw)	2006.06-2010.03		Front;Rear	Cabriolet RWD 273967		Flexible Coupling	533884
	2006.06-2010.03		Front;Rear	Cabriolet RWD 273967		Flexible Coupling Kit	537832S
	2006.06-2010.12		Front;Rear	Coupe RWD 273967		Flexible Coupling	533884
	2006.06-2010.12		Front;Rear	Coupe RWD 273967		Flexible Coupling Kit	537832S
CLK55 AMG							
5.4 (255 kw)	1998.10-2003.12		Centre	Coupe RWD 113984		Center Bearing Support	538666
	1998.10-2003.12		Front	Coupe RWD 113984		Flexible Coupling	512676
	1998.10-2003.12		Front	Coupe RWD 113984		Flexible Coupling Kit	510434S
5.4 (270 kw)	2002.06-2006.05		Centre	Cabriolet RWD 113987		Center Bearing Support	538639
	2002.06-2006.05		Centre	Coupe RWD 113987		Center Bearing Support	538639
	2002.06-2006.05		Front	Cabriolet RWD 113987		Flexible Coupling	512676
	2002.06-2006.05		Front	Coupe RWD 113987		Flexible Coupling	512676
CLK63 AMG							
6.2 (354 kw)	2006.06-2009.05		Centre	Coupe RWD 156982		Center Bearing Support	538639
	2006.06-2009.05		Front;Rear	Coupe RWD 156982		Flexible Coupling	533884
	2006.06-2009.05		Front;Rear	Coupe RWD 156982		Flexible Coupling Kit	537832S
	2006.06-2010.03		Centre	Cabriolet RWD 156982		Center Bearing Support	538639
	2006.06-2010.03		Front;Rear	Cabriolet RWD 156982		Flexible Coupling	533884
	2006.06-2010.03		Front;Rear	Cabriolet RWD 156982		Flexible Coupling Kit	537832S
6.2 (373 kw)	2007.05-2009.05		Front;Rear	Coupe RWD 156982		Flexible Coupling	533884
	2007.05-2009.05		Front;Rear	Coupe RWD 156982		Flexible Coupling Kit	537832S
CLS220							
2.0 (143 kw)	2018.06-		Front;Rear	Coupe RWD 654920		Flexible Coupling Kit	537630S
2.2 (120 kw)	2014.05-2017.12		Centre	Coupe RWD 651924		Center Bearing Support	539927
	2014.05-2017.12		Centre	Estate RWD 651924		Center Bearing Support	539927

	YEAR	TRANSM.	FITTING POSITION	BODY STYLE & DRIVE TYPE & ENGINE	REMARKS	PRODUCT	GSP Ref.
MERCEDES-BENZ							
CLS220							
2.2 (120 kw)	2014.05-2017.12		Front	Coupe RWD 651924		Flexible Coupling	537630
	2014.05-2017.12		Front;Rear	Coupe RWD 651924	7AT	Flexible Coupling	512677
	2014.05-2017.12		Front;Rear	Estate RWD 651924	7AT	Flexible Coupling	512677
	2014.05-2017.12		Front;Rear	Coupe RWD 651924		Flexible Coupling Kit	512677S
	2014.05-2017.12		Front;Rear	Estate RWD 651924		Flexible Coupling Kit	512677S
	2014.05-2017.12		Front;Rear	Coupe RWD 651924		Flexible Coupling Kit	537630S
	2014.05-2017.12		Front;Rear	Estate RWD 651924		Flexible Coupling Kit	537630S
	2014.05-2017.12		Front;Rear	Coupe RWD 651924	7AT	Flexible Coupling Kit	537794S
	2014.05-2017.12		Front;Rear	Estate RWD 651924	7AT	Flexible Coupling Kit	537794S
2.2 (125 kw)	2014.05-2017.12		Centre	Coupe RWD 651924		Center Bearing Support	539927
	2014.05-2017.12		Centre	Estate RWD 651924		Center Bearing Support	539927
	2014.05-2017.12		Front	Coupe RWD 651924		Flexible Coupling	537630
	2014.05-2017.12		Front;Rear	Coupe RWD 651924	7AT	Flexible Coupling	512677
	2014.05-2017.12		Front;Rear	Estate RWD 651924	7AT	Flexible Coupling	512677
	2014.05-2017.12		Front;Rear	Coupe RWD 651924		Flexible Coupling Kit	512677S
	2014.05-2017.12		Front;Rear	Estate RWD 651924		Flexible Coupling Kit	512677S
	2014.05-2017.12		Front;Rear	Coupe RWD 651924		Flexible Coupling Kit	537630S
	2014.05-2017.12		Front;Rear	Estate RWD 651924		Flexible Coupling Kit	537630S
	2014.05-2017.12		Front;Rear	Coupe RWD 651924	7AT	Flexible Coupling Kit	537794S
	2014.05-2017.12		Front;Rear	Estate RWD 651924	7AT	Flexible Coupling Kit	537794S
2.2 (130 kw)	2014.05-2017.12		Centre	Coupe RWD 651924		Center Bearing Support	539927
	2014.05-2017.12		Centre	Estate RWD 651924		Center Bearing Support	539927
	2014.05-2017.12		Front	Coupe RWD 651924		Flexible Coupling	537630
	2014.05-2017.12		Front;Rear	Coupe RWD 651924	7AT	Flexible Coupling	512677
	2014.05-2017.12		Front;Rear	Estate RWD 651924	7AT	Flexible Coupling	512677
	2014.05-2017.12		Front;Rear	Coupe RWD 651924		Flexible Coupling Kit	512677S
	2014.05-2017.12		Front;Rear	Estate RWD 651924		Flexible Coupling Kit	512677S
	2014.05-2017.12		Front;Rear	Coupe RWD 651924		Flexible Coupling Kit	537630S
	2014.05-2017.12		Front;Rear	Estate RWD 651924		Flexible Coupling Kit	537630S
	2014.05-2017.12		Front;Rear	Coupe RWD 651924	7AT	Flexible Coupling Kit	537794S
	2014.05-2017.12		Front;Rear	Estate RWD 651924	7AT	Flexible Coupling Kit	537794S
CLS250							
2.2 (150 kw)	2011.04-2017.12		Front	Coupe RWD 651924		Flexible Coupling	537851
	2011.04-2017.12		Front;Rear	Coupe RWD 651924		Flexible Coupling	533884
	2011.04-2017.12		Front;Rear	Coupe RWD 651924	Inner diameter:70mm	Flexible Coupling Kit	537832S
	2011.04-2017.12		Front;Rear	Coupe RWD 651924	Inner diameter:70.5mm	Flexible Coupling Kit	537851S
	2012.10-2017.12		Front	Estate RWD 651924		Flexible Coupling	537851
	2012.10-2017.12		Front;Rear	Estate RWD 651924		Flexible Coupling	533884
	2012.10-2017.12		Front;Rear	Estate RWD 651924	Inner diameter:70mm	Flexible Coupling Kit	537832S
	2012.10-2017.12		Front;Rear	Estate RWD 651924	Inner diameter:70.5mm	Flexible Coupling Kit	537851S
	2014.05-2017.12	7AT	Front	Coupe 4WD 651924		Propshaft	PS901588
	2014.05-2017.12	7AT	Front	Estate 4WD 651924		Propshaft	PS901588
	2014.05-2017.12		Front	Coupe 4WD 651924		Flexible Coupling	537851
	2014.05-2017.12		Front	Estate 4WD 651924		Flexible Coupling	537851
	2014.05-2017.12		Front;Rear	Coupe 4WD 651924		Flexible Coupling	512678
	2014.05-2017.12		Front;Rear	Estate 4WD 651924		Flexible Coupling	512678
	2014.05-2017.12		Front;Rear	Coupe 4WD 651924		Flexible Coupling Kit	512673S
	2014.05-2017.12		Front;Rear	Estate 4WD 651924		Flexible Coupling Kit	512673S
CLS260							
2.0 (155 kw)	2015.01-2017.12		Front	Coupe RWD M 274.920		Flexible Coupling	537851
CLS280							
3.0 (170 kw)	2008.07-2010.12		Front;Rear	Coupe RWD 272943		Flexible Coupling	512678
	2008.07-2010.12		Front;Rear	Coupe RWD 272943		Flexible Coupling Kit	512673S
CLS300							
2.0 (180 kw)	2018.04-		Front;Rear	Coupe RWD 654920		Flexible Coupling	537851
2.0 (190 kw)	2018.07-		Front;Rear	Coupe RWD M 264.920		Flexible Coupling Kit	537630S
3.0 (170 kw)	2009.04-2010.12		Front;Rear	Coupe RWD 272943		Flexible Coupling	512678
	2009.04-2010.12		Front;Rear	Coupe RWD 272943		Flexible Coupling Kit	512673S
3.5 (185 kw)	2011.10-2014.05		Front	Coupe RWD M 276.952, M 276.957		Flexible Coupling Kit	537889S
	2011.10-2014.05		Front;Rear	Coupe RWD M 276.952, M 276.957		Flexible Coupling Kit	512677S
CLS320							
3.0 (155 kw)	2005.01-2010.12		Centre	Coupe RWD 642920		Center Bearing Support	538667
	2005.01-2010.12		Front;Rear	Coupe RWD 642920		Flexible Coupling	533884
	2005.01-2010.12		Front;Rear	Coupe RWD 642920		Flexible Coupling Kit	537832S

	YEAR	TRANSM.	FITTING POSITION	BODY STYLE & DRIVE TYPE & ENGINE	REMARKS	PRODUCT	GSP Ref.
MERCEDES-BENZ							
CLS320							
3.0 (165 kw)	2005.03-2010.12		Centre	Coupe RWD 642920		Center Bearing Support	538667
	2005.03-2010.12		Front;Rear	Coupe RWD 642920		Flexible Coupling	533884
	2005.03-2010.12		Front;Rear	Coupe RWD 642920		Flexible Coupling Kit	537832S
3.0 (200 kw)	2015.01-2017.12		Front	Coupe RWD M 276.820		Flexible Coupling	537851
CLS350							
2.0 (220 kw)	2018.08-	9AT	Rear	Coupe 4WD 264920		Propshaft	PS901706
	2018.08-		Centre	Coupe RWD 264920		Center Bearing Support	538622
	2018.08-		Centre	Coupe 4WD 264920		Center Bearing Support	538622
	2018.08-		Front;Rear	Coupe 4WD 264920		Flexible Coupling	537627
	2018.08-		Front;Rear	Coupe 4WD 264920		Flexible Coupling Kit	537627S
	2018.08-		Front;Rear	Coupe RWD 264920		Flexible Coupling Kit	537630S
2.9 (210 kw)	2017.12-		Front;Rear	Coupe 4WD 656929		Flexible Coupling Kit	537630S
3.0 (165 kw)	2009.04-2010.12		Centre	Coupe RWD 642920		Center Bearing Support	538667
	2009.04-2010.12		Front;Rear	Coupe RWD 642920		Flexible Coupling	533884
	2009.04-2010.12		Front;Rear	Coupe RWD 642920		Flexible Coupling Kit	537832S
3.0 (185 kw)	2013.02-2017.12	7AT	Front	Coupe 4WD 642854/642858		Propshaft	PS901588
	2013.02-2017.12		Centre	Coupe 4WD 642854/642858	7AT	Center Bearing Support	538668
	2013.02-2017.12		Centre	Coupe RWD 642852/642853		Center Bearing Support	538668
	2013.02-2017.12		Front	Coupe RWD 642852/642853		Flexible Coupling	537851
	2013.02-2017.12		Front;Rear	Coupe 4WD 642854/642858	5AT;7AT	Flexible Coupling	512677
	2013.02-2017.12		Front;Rear	Coupe RWD 642852/642853		Flexible Coupling	533884
	2013.02-2017.12		Front	Coupe 4WD 642854/642858	5AT;7AT	Flexible Coupling Kit	537794S
	2013.02-2017.12		Front;Rear	Coupe 4WD 642854/642858		Flexible Coupling Kit	512677S
	2013.02-2017.12		Front;Rear	Coupe RWD 642852/642853	7AT	Flexible Coupling Kit	537832S
	2013.02-2017.12		Front;Rear	Coupe RWD 642852/642853	9AT	Flexible Coupling Kit	537851S
	2014.05-2017.12	7AT	Front	Estate 4WD 642854/642858		Propshaft	PS901588
	2014.05-2017.12		Centre	Estate 4WD 642854/642858	7AT	Center Bearing Support	538668
	2014.05-2017.12		Front;Rear	Estate 4WD 642854/642858	5AT;7AT	Flexible Coupling	512677
	2014.05-2017.12		Front	Estate 4WD 642854/642858	5AT;7AT	Flexible Coupling Kit	537794S
	2014.05-2017.12		Front;Rear	Estate 4WD 642854/642858		Flexible Coupling Kit	512677S
3.0 (190 kw)	2014.05-2017.12		Centre	Estate RWD 642852/642853		Center Bearing Support	538668
	2014.05-2017.12		Front	Estate RWD 642852/642853		Flexible Coupling	537851
	2014.05-2017.12		Front;Rear	Estate RWD 642852/642853	7AT	Flexible Coupling Kit	537832S
	2014.05-2017.12		Front;Rear	Estate RWD 642852/642853	9AT	Flexible Coupling Kit	537851S
	2014.06-2017.12		Centre	Coupe RWD 642852/642853		Center Bearing Support	538668
	2014.06-2017.12		Front	Coupe RWD 642852/642853		Flexible Coupling	537851
	2014.06-2017.12		Front;Rear	Coupe RWD 642852/642853		Flexible Coupling	533884
	2014.06-2017.12		Front;Rear	Coupe RWD 642852/642853		Flexible Coupling Kit	537832S
	2015.04-2017.12		Centre	Coupe 4WD 642854/642858		Center Bearing Support	538668
	2015.04-2017.12		Centre	Estate 4WD 642854/642858		Center Bearing Support	538668
	2015.04-2017.12		Front;Rear	Coupe 4WD 642854/642858	5AT;7AT	Flexible Coupling	512677
	2015.04-2017.12		Front;Rear	Estate 4WD 642854/642858	5AT;7AT	Flexible Coupling	512677
	2015.04-2017.12		Front	Coupe 4WD 642854/642858	5AT;7AT	Flexible Coupling Kit	537794S
	2015.04-2017.12		Front	Estate 4WD 642854/642858	5AT;7AT	Flexible Coupling Kit	537794S
	2015.04-2017.12		Front;Rear	Coupe 4WD 642854/642858		Flexible Coupling Kit	512677S
	2015.04-2017.12		Front;Rear	Estate 4WD 642854/642858		Flexible Coupling Kit	512677S
3.0 (195 kw)	2011.01-2014.08		Centre	Coupe RWD 642853		Center Bearing Support	538668
	2011.01-2014.08		Front	Coupe RWD 642853		Flexible Coupling	537851
	2011.01-2014.08		Front;Rear	Coupe RWD 642853		Flexible Coupling	533884
	2011.01-2014.08		Front;Rear	Coupe RWD 642853	Inner diameter:70mm	Flexible Coupling Kit	537832S
	2011.01-2014.08		Front;Rear	Coupe RWD 642853	Inner diameter:70.5mm	Flexible Coupling Kit	537851S
	2011.09-2014.08	7AT	Front	Coupe 4WD 642854		Propshaft	PS901588
	2011.09-2014.08		Centre	Coupe 4WD 642854	7AT	Center Bearing Support	538668
	2011.09-2014.08		Front;Rear	Coupe 4WD 642854	5AT;7AT	Flexible Coupling	512677
	2011.09-2014.08		Front	Coupe 4WD 642854	5AT;7AT	Flexible Coupling Kit	537794S
	2011.09-2014.08		Front;Rear	Coupe 4WD 642854		Flexible Coupling Kit	512677S
	2012.10-2014.08	7AT	Front	Estate 4WD 642854		Propshaft	PS901588
	2012.10-2014.08		Centre	Estate 4WD 642854	7AT	Center Bearing Support	538668
	2012.10-2014.08		Centre	Estate RWD 642853		Center Bearing Support	538668
	2012.10-2014.08		Front	Estate RWD 642853		Flexible Coupling	537851
	2012.10-2014.08		Front;Rear	Estate 4WD 642854	5AT;7AT	Flexible Coupling	512677
	2012.10-2014.08		Front;Rear	Estate RWD 642853		Flexible Coupling	533884
	2012.10-2014.08		Front	Estate 4WD 642854	5AT;7AT	Flexible Coupling Kit	537794S
	2012.10-2014.08		Front;Rear	Estate 4WD 642854		Flexible Coupling Kit	512677S

	YEAR	TRANSM.	FITTING POSITION	BODY STYLE & DRIVE TYPE & ENGINE	REMARKS	PRODUCT	GSP Ref.
MERCEDES-BENZ							
CLS350							
3.0 (195 kw)	2012.10-2014.08		Front;Rear	Estate RWD 642853	Inner diameter:70mm	Flexible Coupling Kit	537832S
	2012.10-2014.08		Front;Rear	Estate RWD 642853	Inner diameter:70.5mm	Flexible Coupling Kit	537851S
3.0 (200 kw)	2009.04-2010.12		Centre	Coupe RWD 642920		Center Bearing Support	538667
3.5 (200 kw)	2004.07-2010.12		Centre	Coupe RWD 272964	Height:57.7mm	Center Bearing Support	538667
	2004.07-2010.12		Front;Rear	Coupe RWD 272964		Flexible Coupling Kit	537794S
3.5 (215 kw)	2006.04-2010.12		Centre	Coupe RWD 272985	Height:57.7mm	Center Bearing Support	538667
	2006.04-2010.12		Front;Rear	Coupe RWD 272985		Flexible Coupling Kit	537794S
3.5 (225 kw)	2011.01-2014.08		Centre	Coupe RWD 276952		Center Bearing Support	538668
	2011.01-2014.08		Front	Coupe RWD 276952	7AT	Flexible Coupling	512672
	2011.01-2014.08		Front;Rear	Coupe RWD 276952	7AT	Flexible Coupling	512677
	2011.01-2014.08		Front	Coupe RWD 276952	537889S and 537794S different structure	Flexible Coupling Kit	537889S
	2011.01-2014.08		Rear	Coupe RWD 276952		Flexible Coupling Kit	537793S
	2011.01-2014.08		Front;Rear	Coupe RWD 276952		Flexible Coupling Kit	512677S
	2011.01-2014.08		Front;Rear	Coupe RWD 276952	537794S and 537889S different structure	Flexible Coupling Kit	537794S
	2012.10-2014.08		Centre	Estate RWD 276952		Center Bearing Support	538668
	2012.10-2014.08		Front	Estate RWD 276952	7AT	Flexible Coupling	512672
	2012.10-2014.08		Front;Rear	Estate RWD 276952	7AT	Flexible Coupling	512677
	2012.10-2014.08		Front	Estate RWD 276952	537889S and 537794S different structure	Flexible Coupling Kit	537889S
	2012.10-2014.08		Rear	Estate RWD 276952		Flexible Coupling Kit	537793S
	2012.10-2014.08		Front;Rear	Estate RWD 276952		Flexible Coupling Kit	512677S
	2012.10-2014.08		Front;Rear	Estate RWD 276952	537794S and 537889S different structure	Flexible Coupling Kit	537794S
CLS400							
2.9 (250 kw)	2017.12-		Front	Coupe 4WD 656929		Flexible Coupling	537630
	2017.12-		Front;Rear	Coupe 4WD 656929		Flexible Coupling Kit	537630S
3.0 (245 kw)	2014.05-2017.12	7AT	Front	Coupe 4WD 276820	Model year from:2015,Model year to:2016	Propshaft	PS900357
	2014.05-2017.12		Centre	Estate 4WD 276820		Center Bearing Support	538668
	2014.05-2017.12		Centre	Coupe 4WD 276820		Center Bearing Support	538668
	2014.05-2017.12		Centre	Coupe RWD 276820	for SA code:805	Center Bearing Support	538668
	2014.05-2017.12		Centre	Estate RWD 276820		Center Bearing Support	538668
	2014.05-2017.12		Front	Coupe RWD 276820		Flexible Coupling	537851
	2014.05-2017.12		Front	Estate RWD 276820		Flexible Coupling	537851
	2014.05-2017.12		Front;Rear	Coupe RWD 276820		Flexible Coupling	533884
	2014.05-2017.12		Front;Rear	Estate RWD 276820		Flexible Coupling	533884
	2014.05-2017.12		Front;Rear	Estate 4WD 276820		Flexible Coupling Kit	512673S
	2014.05-2017.12		Front;Rear	Coupe 4WD 276820		Flexible Coupling Kit	512673S
	2014.05-2017.12		Front;Rear	Coupe RWD 276820		Flexible Coupling Kit	537851S
	2014.05-2017.12		Front;Rear	Estate RWD 276820		Flexible Coupling Kit	537851S
3.5 (245 kw)	2014.06-2017.12		Centre	Estate 4WD 276850		Center Bearing Support	538668
	2014.06-2017.12		Front;Rear	Estate 4WD 276850		Flexible Coupling Kit	512673S
	2014.07-2017.12		Centre	Coupe 4WD 276850		Center Bearing Support	538668
	2014.07-2017.12		Centre	Coupe RWD 276850	for SA code:805	Center Bearing Support	538668
	2014.07-2017.12		Centre	Estate RWD 276850	for SA code:805	Center Bearing Support	538668
	2014.07-2017.12		Front	Coupe RWD 276850		Flexible Coupling	537851
	2014.07-2017.12		Front	Estate RWD 276850		Flexible Coupling	537851
	2014.07-2017.12		Front;Rear	Coupe RWD 276850		Flexible Coupling	533884
	2014.07-2017.12		Front;Rear	Estate RWD 276850		Flexible Coupling	533884
	2014.07-2017.12		Front;Rear	Coupe 4WD 276850		Flexible Coupling Kit	512673S
	2014.07-2017.12		Front;Rear	Coupe RWD 276850		Flexible Coupling Kit	537851S
	2014.07-2017.12		Front;Rear	Estate RWD 276850		Flexible Coupling Kit	537851S
CLS450							
3.0 (270 kw)	2017.12-		Centre	Coupe 4WD 256930		Center Bearing Support	538622
	2017.12-		Front	Coupe 4WD 256930		Flexible Coupling	537630
	2017.12-		Front;Rear	Coupe 4WD 256930		Flexible Coupling	537627
	2017.12-		Front;Rear	Coupe 4WD 256930		Flexible Coupling Kit	537627S
	2017.12-		Front;Rear	Coupe 4WD 256930		Flexible Coupling Kit	537630S
CLS500							
4.7 (300 kw)	2011.02-2017.12		Centre	Coupe RWD 278922		Center Bearing Support	538668
	2011.02-2017.12		Front	Coupe RWD 278922		Flexible Coupling	537851
	2011.02-2017.12		Front;Rear	Coupe RWD 278922		Flexible Coupling	533884
	2011.02-2017.12		Front;Rear	Coupe RWD 278922	Inner diameter:70mm	Flexible Coupling Kit	537832S
	2011.02-2017.12		Front;Rear	Coupe RWD 278922	Inner diameter:70.5mm	Flexible Coupling Kit	537851S
	2011.09-2017.12		Centre	Coupe 4WD 278922		Center Bearing Support	538668
	2011.09-2017.12		Front	Coupe 4WD 278922		Flexible Coupling	537630
	2011.09-2017.12		Front;Rear	Coupe 4WD 278922	5AT;7AT	Flexible Coupling	512677

	YEAR	TRANSM.	FITTING POSITION	BODY STYLE & DRIVE TYPE & ENGINE	REMARKS	PRODUCT	GSP Ref.
MERCEDES-BENZ							
CLS500							
4.7 (300 kw)	2011.09-2017.12		Front	Coupe 4WD 278922	5AT;7AT	Flexible Coupling Kit	537794S
	2011.09-2017.12		Front;Rear	Coupe 4WD 278922		Flexible Coupling Kit	512677S
	2011.09-2017.12		Front;Rear	Coupe 4WD 278922		Flexible Coupling Kit	537630S
	2012.10-2017.12		Centre	Estate 4WD 278922		Center Bearing Support	538668
	2012.10-2017.12		Centre	Estate RWD 278922		Center Bearing Support	538668
	2012.10-2017.12		Front	Estate RWD 278922		Flexible Coupling	537851
	2012.10-2017.12		Front;Rear	Estate 4WD 278922	5AT;7AT	Flexible Coupling	512677
	2012.10-2017.12		Front;Rear	Estate RWD 278922		Flexible Coupling	533884
	2012.10-2017.12		Front	Estate 4WD 278922	5AT;7AT	Flexible Coupling Kit	537794S
	2012.10-2017.12		Front;Rear	Estate 4WD 278922		Flexible Coupling Kit	512677S
	2012.10-2017.12		Front;Rear	Estate 4WD 278922		Flexible Coupling Kit	537630S
	2012.10-2017.12		Front;Rear	Estate RWD 278922	Inner diameter:70mm	Flexible Coupling Kit	537832S
	2012.10-2017.12		Front;Rear	Estate RWD 278922	Inner diameter:70.5mm	Flexible Coupling Kit	537851S
5.0 (225 kw)	2004.10-2010.12		Centre	Coupe RWD 113967		Center Bearing Support	538667
	2004.10-2010.12		Front;Rear	Coupe RWD 113967		Flexible Coupling Kit	537794S
5.5 (285 kw)	2006.04-2011.12		Centre	Coupe RWD 273960		Center Bearing Support	538667
	2006.04-2011.12		Front;Rear	Coupe RWD 273960		Flexible Coupling	533884
	2006.04-2011.12		Front;Rear	Coupe RWD 273960		Flexible Coupling Kit	537832S
CLS53 AMG							
3.0 (320 kw)	2018.05-		Rear	Coupe 4WD 256930		Flexible Coupling	537851
CLS55 AMG							
5.4 (350 kw)	2005.01-2010.12		Centre	Coupe RWD 113990	Height:57.7mm	Center Bearing Support	538667
	2005.01-2010.12		Front;Rear	Coupe RWD 113990		Flexible Coupling	533884
	2005.01-2010.12		Front;Rear	Coupe RWD 113990		Flexible Coupling Kit	537832S
CLS550							
5.5 (285 kw)	2006.04-2011.12		Centre	Coupe RWD 273960		Center Bearing Support	538667
	2006.04-2011.12		Front;Rear	Coupe RWD 273960		Flexible Coupling	533884
	2006.04-2011.12		Front;Rear	Coupe RWD 273960		Flexible Coupling Kit	537832S
CLS63 AMG							
5.5 (386 kw)	2011.02-2017.12		Centre	Coupe RWD 157980/157981		Center Bearing Support	538668
	2011.02-2017.12		Front;Rear	Coupe RWD 157980/157981		Flexible Coupling	533884
	2011.02-2017.12		Front;Rear	Coupe RWD 157980/157981		Flexible Coupling	537843
	2011.02-2017.12		Rear	Coupe RWD 157980/157981		Flexible Coupling Kit	533884S
	2011.02-2017.12		Front;Rear	Coupe RWD 157980/157981		Flexible Coupling Kit	537832S
	2012.10-2017.12		Centre	Estate RWD 157981		Center Bearing Support	538668
	2012.10-2017.12		Front;Rear	Estate RWD 157981		Flexible Coupling	533884
	2012.10-2017.12		Front;Rear	Estate RWD 157981		Flexible Coupling	537843
	2012.10-2017.12		Rear	Estate RWD 157981		Flexible Coupling Kit	533884S
	2012.10-2017.12		Front;Rear	Estate RWD 157981		Flexible Coupling Kit	537832S
5.5 (410 kw)	2011.01-2017.12		Centre	Coupe RWD 157981		Center Bearing Support	538668
	2011.01-2017.12		Front;Rear	Coupe RWD 157981		Flexible Coupling	533884
	2011.01-2017.12		Front;Rear	Coupe RWD 157981		Flexible Coupling	537843
	2011.01-2017.12		Rear	Coupe RWD 157981		Flexible Coupling Kit	533884S
	2011.01-2017.12		Front;Rear	Coupe RWD 157981		Flexible Coupling Kit	537832S
	2013.05-2017.12	7AT	Front	Coupe 4WD 157981	Model year from:2014,Model year to:2015	Propshaft	PS900359
	2013.05-2017.12		Centre	Estate RWD 157981		Center Bearing Support	538668
	2013.05-2017.12		Centre	Coupe 4WD 157981		Center Bearing Support	538668
	2013.05-2017.12		Centre	Estate 4WD 157981		Center Bearing Support	538668
	2013.05-2017.12		Front;Rear	Estate RWD 157981		Flexible Coupling	533884
	2013.05-2017.12		Front;Rear	Coupe 4WD 157981		Flexible Coupling	533884
	2013.05-2017.12		Front;Rear	Estate 4WD 157981		Flexible Coupling	533884
	2013.05-2017.12		Front;Rear	Estate RWD 157981		Flexible Coupling	537843
	2013.05-2017.12		Front;Rear	Coupe 4WD 157981		Flexible Coupling	537843
	2013.05-2017.12		Front;Rear	Estate 4WD 157981		Flexible Coupling	537843
	2013.05-2017.12		Front	Coupe 4WD 157981		Flexible Coupling Kit	537832S
	2013.05-2017.12		Front	Estate 4WD 157981		Flexible Coupling Kit	537832S
	2013.05-2017.12		Rear	Estate RWD 157981		Flexible Coupling Kit	533884S
	2013.05-2017.12		Rear	Coupe 4WD 157981		Flexible Coupling Kit	533884S
	2013.05-2017.12		Rear	Estate 4WD 157981		Flexible Coupling Kit	533884S
	2013.05-2017.12		Front;Rear	Estate RWD 157981		Flexible Coupling Kit	537832S
5.5 (430 kw)	2013.02-2017.12	7AT	Front	Coupe 4WD 157981	Model year from:2014,Model year to:2016	Propshaft	PS900359
	2013.02-2017.12		Centre	Coupe 4WD 157981		Center Bearing Support	538668
	2013.02-2017.12		Centre	Estate 4WD 157981		Center Bearing Support	538668
	2013.02-2017.12		Centre	Coupe RWD 157981		Center Bearing Support	538668

	YEAR	TRANSM.	FITTING POSITION	BODY STYLE & DRIVE TYPE & ENGINE	REMARKS	PRODUCT	GSP Ref.
MERCEDES-BENZ							
CLS63 AMG							
5.5 (430 kw)	2013.02-2017.12		Centre	Estate RWD 157981		Center Bearing Support	538668
	2013.02-2017.12		Front;Rear	Coupe 4WD 157981		Flexible Coupling	537843
	2013.02-2017.12		Front;Rear	Estate 4WD 157981		Flexible Coupling	537843
	2013.02-2017.12		Rear	Coupe 4WD 157981		Flexible Coupling Kit	533884S
	2013.02-2017.12		Rear	Estate 4WD 157981		Flexible Coupling Kit	533884S
	2013.02-2017.12		Rear	Coupe RWD 157981		Flexible Coupling Kit	533884S
	2013.02-2017.12		Rear	Estate RWD 157981		Flexible Coupling Kit	533884S
6.2 (378 kw)	2006.04-2010.12		Centre	Coupe RWD 156983	Height:57.7mm	Center Bearing Support	538667
	2006.04-2010.12		Front;Rear	Coupe RWD 156983		Flexible Coupling	533884
	2006.04-2010.12		Front;Rear	Coupe RWD 156983		Flexible Coupling Kit	537832S
E180							
1.5 (115 kw)	2019.07-2023.10		Front;Rear	Saloon RWD 264915		Flexible Coupling	537627
	2019.07-2023.10		Front;Rear	Saloon RWD 264915		Flexible Coupling Kit	537627S
1.6 (115 kw)	2013.08-2015.12		Centre	Saloon RWD 274910		Center Bearing Support	538668
	2016.01-2019.06		Front;Rear	Saloon RWD 274910		Flexible Coupling	537627
	2016.01-2019.06		Front;Rear	Saloon RWD 274910		Flexible Coupling Kit	537627S
E200							
1.6 (118 kw)	2018.11-2023.08		Centre	Estate RWD 654916		Center Bearing Support	538622
	2018.11-2023.08		Front;Rear	Saloon RWD 654916		Flexible Coupling Kit	537630S
	2018.11-2023.08		Front;Rear	Estate RWD 654916		Flexible Coupling Kit	537630S
1.8 (120 kw)	2002.08-2006.07	AT	Front	Saloon RWD 271941		Propshaft	PS900364
	2002.08-2006.07		Centre	Saloon RWD 271941	Height:57.7mm	Center Bearing Support	538667
	2002.08-2006.07		Front;Rear	Saloon RWD 271941		Flexible Coupling	512678
	2002.08-2006.07		Front;Rear	Saloon RWD 271941		Flexible Coupling Kit	512673S
	2003.04-2006.07	AT	Front	Estate RWD 271941		Propshaft	PS900364
	2003.04-2006.07		Centre	Estate RWD 271941	Height:57.7mm	Center Bearing Support	538667
	2003.04-2006.07		Front;Rear	Estate RWD 271941		Flexible Coupling	512678
	2003.04-2006.07		Front;Rear	Estate RWD 271941		Flexible Coupling Kit	512673S
	2004.03-2008.12	AT	Front	Saloon RWD 271941NGT		Propshaft	PS900364
	2004.03-2008.12		Centre	Saloon RWD 271941NGT	Height:57.7mm	Center Bearing Support	538667
	2004.03-2008.12		Front;Rear	Saloon RWD 271941NGT		Flexible Coupling	512678
	2004.03-2008.12		Front;Rear	Saloon RWD 271941NGT		Flexible Coupling Kit	512673S
	2011.03-2015.12		Centre	Saloon RWD 271958NGT		Center Bearing Support	538668
	2011.03-2015.12		Front;Rear	Saloon RWD 271958NGT	6MT;7AT	Flexible Coupling	512677
	2011.03-2015.12		Front;Rear	Saloon RWD 271958NGT		Flexible Coupling Kit	512673S
	2011.03-2015.12		Front;Rear	Saloon RWD 271958NGT		Flexible Coupling Kit	512677S
	2011.03-2015.12		Front;Rear	Saloon RWD 271958NGT	6MT;7AT	Flexible Coupling Kit	537794S
1.8 (135 kw)	2006.04-2008.12	AT	Front	Saloon RWD 271956		Propshaft	PS900364
	2006.04-2008.12		Centre	Saloon RWD 271956	Height:57.7mm	Center Bearing Support	538667
	2006.04-2008.12		Front;Rear	Saloon RWD 271956		Flexible Coupling	512678
	2006.04-2008.12		Front;Rear	Saloon RWD 271956		Flexible Coupling Kit	512673S
	2006.04-2009.07	AT	Front	Estate RWD 271956		Propshaft	PS900364
	2006.04-2009.07		Centre	Estate RWD 271956	Height:57.7mm	Center Bearing Support	538667
	2006.04-2009.07		Front;Rear	Estate RWD 271956		Flexible Coupling	512678
	2006.04-2009.07		Front;Rear	Estate RWD 271956		Flexible Coupling Kit	512673S
	2009.01-2015.12	MT	Rear	Saloon RWD 271820/271860	Date to:2012.06	Propshaft	PS901480
	2009.01-2015.12		Centre	Saloon RWD 271820/271860	Engine Code:M 271.860	Center Bearing Support	538668
	2009.01-2015.12		Front;Rear	Saloon RWD 271820/271860		Flexible Coupling	512678
	2009.01-2015.12		Front;Rear	Saloon RWD 271820/271860		Flexible Coupling Kit	512673S
	2009.01-2016.12	7AT	Rear	Coupe RWD 271820/271860		Propshaft	PS901659
	2009.01-2016.12		Centre	Coupe RWD 271820/271860		Center Bearing Support	538668
	2009.01-2016.12		Centre	Estate RWD 271860		Center Bearing Support	538668
	2009.01-2016.12		Front;Rear	Coupe RWD 271820/271860		Flexible Coupling	512678
	2009.01-2016.12		Front;Rear	Estate RWD 271860		Flexible Coupling	512678
	2009.01-2016.12		Front;Rear	Coupe RWD 271820/271860		Flexible Coupling Kit	512673S
	2009.01-2016.12		Front;Rear	Estate RWD 271860		Flexible Coupling Kit	512673S
	2010.01-2016.12	7AT	Rear	Cabriolet RWD 271820/271860		Propshaft	PS901659
	2010.01-2016.12		Centre	Cabriolet RWD 271820/271860		Center Bearing Support	538668
	2010.01-2016.12		Front;Rear	Cabriolet RWD 271820/271860		Flexible Coupling	512678
	2010.01-2016.12		Front;Rear	Cabriolet RWD 271820/271860		Flexible Coupling Kit	512673S
2.0 (55 kw)	1993.06-1995.06		Centre	Saloon RWD 601912		Center Bearing Support	538997
	1993.06-1995.06		Front	Saloon RWD 601912	Chassis no. to:A 982463,MT,not for taxis	Flexible Coupling	510433
	1993.06-1995.06		Front	Saloon RWD 601912	not for taxis	Flexible Coupling	510436
	1993.06-1995.06		Front	Saloon RWD 601912		Flexible Coupling	510458

	YEAR	TRANSM.	FITTING POSITION	BODY STYLE & DRIVE TYPE & ENGINE	REMARKS	PRODUCT	GSP Ref.
MERCEDES-BENZ **E200**							
2.0 (55 kw)	1993.06-1995.06		Front	Saloon RWD 601912	for taxis	Flexible Coupling	510569
	1993.06-1995.06		Rear	Saloon RWD 601912		Flexible Coupling	510460
	1993.06-1995.06		Front	Saloon RWD 601912	Chassis no. to:A 982463,MT,not for taxis	Flexible Coupling Kit	510433S
	1993.06-1995.06		Front	Saloon RWD 601912	not for taxis	Flexible Coupling Kit	510434S
	1993.06-1995.06		Front	Saloon RWD 601912	MT,for taxis	Flexible Coupling Kit	538137S
	1993.06-1995.06		Rear	Saloon RWD 601912		Flexible Coupling Kit	510459S
	1993.06-1995.06		Front;Rear	Saloon RWD 601912	for taxis	Flexible Coupling Kit	510570S
2.0 (65 kw)	1995.07-2000.06		Centre	Saloon RWD 604917		Center Bearing Support	539004
	1995.07-2000.06		Front	Saloon RWD 604917	Chassis no. from:A 612071,MT	Flexible Coupling	512326
	1995.07-2000.06		Front	Saloon RWD 604917		Flexible Coupling	517747
	1995.07-2000.06		Front	Saloon RWD 604917	MT,not for taxis	Flexible Coupling	538136
	1995.07-2000.06		Rear	Saloon RWD 604917		Flexible Coupling	510460
	1995.07-2000.06		Front	Saloon RWD 604917		Flexible Coupling Kit	510578S
	1995.07-2000.06		Front	Saloon RWD 604917		Flexible Coupling Kit	537791S
	1995.07-2000.06		Front	Saloon RWD 604917	Chassis no. to:A 612070,MT,not for taxis	Flexible Coupling Kit	537820S
	1995.07-2000.06		Rear	Saloon RWD 604917		Flexible Coupling Kit	510459S
2.0 (100 kw)	1993.06-1995.06		Centre	Saloon RWD 111940		Center Bearing Support	538997
	1993.06-1995.06		Front	Saloon RWD 111940		Flexible Coupling	510436
	1993.06-1995.06		Front	Saloon RWD 111940		Flexible Coupling	510569
	1993.06-1995.06		Rear	Saloon RWD 111940		Flexible Coupling	510460
	1993.06-1995.06		Front	Saloon RWD 111940		Flexible Coupling Kit	510434S
	1993.06-1995.06		Rear	Saloon RWD 111940		Flexible Coupling Kit	510459S
	1993.06-1995.06		Front;Rear	Saloon RWD 111940		Flexible Coupling Kit	510570S
	1993.06-1996.01		Centre	Estate RWD 111940		Center Bearing Support	538997
	1993.06-1996.01		Front	Estate RWD 111940		Flexible Coupling	510436
	1993.06-1996.01		Front	Estate RWD 111940		Flexible Coupling	510569
	1993.06-1996.01		Rear	Estate RWD 111940		Flexible Coupling	510460
	1993.06-1996.01		Front	Estate RWD 111940		Flexible Coupling Kit	510434S
	1993.06-1996.01		Rear	Estate RWD 111940		Flexible Coupling Kit	510459S
	1993.06-1996.01		Front;Rear	Estate RWD 111940		Flexible Coupling Kit	510570S
	1993.06-1996.07		Centre	Coupe RWD 111940		Center Bearing Support	538997
	1993.06-1996.07		Front	Coupe RWD 111940		Flexible Coupling	510436
	1993.06-1996.07		Front	Coupe RWD 111940		Flexible Coupling	510569
	1993.06-1996.07		Rear	Coupe RWD 111940		Flexible Coupling	510460
	1993.06-1996.07		Front	Coupe RWD 111940		Flexible Coupling Kit	510434S
	1993.06-1996.07		Rear	Coupe RWD 111940		Flexible Coupling Kit	510459S
	1993.06-1996.07		Front;Rear	Coupe RWD 111940		Flexible Coupling Kit	510570S
	1993.06-1998.03		Centre	Cabriolet RWD 111940		Center Bearing Support	538997
	1993.06-1998.03		Front	Cabriolet RWD 111940		Flexible Coupling	510436
	1993.06-1998.03		Front	Cabriolet RWD 111940		Flexible Coupling	510569
	1993.06-1998.03		Rear	Cabriolet RWD 111940		Flexible Coupling	510460
	1993.06-1998.03		Front	Cabriolet RWD 111940		Flexible Coupling Kit	510434S
	1993.06-1998.03		Rear	Cabriolet RWD 111940		Flexible Coupling Kit	510459S
	1993.06-1998.03		Front;Rear	Cabriolet RWD 111940		Flexible Coupling Kit	510570S
	1995.07-2000.06		Centre	Saloon RWD 111942		Center Bearing Support	539004
	1995.07-2000.06		Front	Saloon RWD 111942		Flexible Coupling	510569
	1995.07-2000.06		Front	Saloon RWD 111942		Flexible Coupling	512326
	1995.07-2000.06		Front	Saloon RWD 111942		Flexible Coupling Kit	510578S
	1995.07-2000.06		Front	Saloon RWD 111942		Flexible Coupling Kit	537821S
	1995.07-2000.06		Rear	Saloon RWD 111942		Flexible Coupling Kit	510570S
	1996.06-2000.07		Centre	Estate RWD 111942		Center Bearing Support	539004
	1996.06-2000.07		Front	Estate RWD 111942		Flexible Coupling	510569
	1996.06-2000.07		Front	Estate RWD 111942	MT	Flexible Coupling	512326
	1996.06-2000.07		Front	Estate RWD 111942		Flexible Coupling Kit	510578S
	1996.06-2000.07		Front;Rear	Estate RWD 111942		Flexible Coupling Kit	510570S
2.0 (110 kw)	2016.07-2020.06		Rear	Saloon RWD 654920		Flexible Coupling	537630
	2016.07-2020.06		Front;Rear	Saloon RWD 654920		Flexible Coupling Kit	537630S
	2016.10-2019.06		Front	Estate RWD 654920		Flexible Coupling	537630
	2016.10-2019.06		Front;Rear	Estate RWD 654920		Flexible Coupling Kit	537630S
2.0 (115 kw)	2013.07-2015.12		Centre	Saloon RWD 274920NGT		Center Bearing Support	538668
2.0 (120 kw)	2000.07-2002.03		Centre	Saloon RWD 111957		Center Bearing Support	538667
	2000.07-2002.03		Front;Rear	Saloon RWD 111957		Flexible Coupling	512678
	2000.07-2002.03		Front;Rear	Saloon RWD 111957		Flexible Coupling Kit	512673S
	2000.08-2003.05		Centre	Estate RWD 111957		Center Bearing Support	538667

	YEAR	TRANSM.	FITTING POSITION	BODY STYLE & DRIVE TYPE & ENGINE	REMARKS	PRODUCT	GSP Ref.
MERCEDES-BENZ **E200**							
2.0 (120 kw)	2000.08-2003.05		Front;Rear	Estate RWD 111957		Flexible Coupling	512678
	2000.08-2003.05		Front;Rear	Estate RWD 111957		Flexible Coupling Kit	512673S
2.0 (135 kw)	2013.01-2016.12		Centre	Estate RWD 274920		Center Bearing Support	538668
	2013.01-2016.12		Centre	Saloon RWD 274920		Center Bearing Support	538668
	2013.03-2016.12		Centre	Cabriolet RWD 274920		Center Bearing Support	538668
	2013.03-2016.12		Centre	Coupe RWD 274920		Center Bearing Support	538668
	2013.03-2016.12		Front;Rear	Cabriolet RWD 274920		Flexible Coupling	512678
	2013.03-2016.12		Front;Rear	Coupe RWD 274920		Flexible Coupling	512678
	2013.03-2016.12		Front;Rear	Cabriolet RWD 274920		Flexible Coupling Kit	512673S
	2013.03-2016.12		Front;Rear	Coupe RWD 274920		Flexible Coupling Kit	512673S
	2016.01-2020.06		Front;Rear	Saloon RWD 274920		Flexible Coupling	537627
	2016.01-2020.06		Front;Rear	Saloon RWD 274920		Flexible Coupling Kit	537627S
	2016.07-2019.06	9AT	Rear	Saloon 4WD 274920		Propshaft	PS901706
	2016.07-2019.06		Centre	Saloon 4WD 274920		Center Bearing Support	538622
	2016.07-2019.06		Front;Rear	Saloon 4WD 274920		Flexible Coupling	537627
	2016.07-2019.06		Front;Rear	Saloon 4WD 274920		Flexible Coupling Kit	537627S
	2016.07-2020.06		Front;Rear	Estate RWD 274920		Flexible Coupling	537627
	2016.07-2020.06		Front;Rear	Estate RWD 274920		Flexible Coupling Kit	537627S
	2016.12-		Centre	Coupe RWD 274920		Center Bearing Support	538622
	2016.12-		Rear	Coupe RWD 274920		Flexible Coupling	537847
	2016.12-		Front;Rear	Coupe RWD 274920		Flexible Coupling	537627
	2016.12-		Front;Rear	Coupe RWD 274920		Flexible Coupling Kit	537627S
	2017.01-2019.06	9AT	Rear	Estate 4WD 274920		Propshaft	PS901706
	2017.01-2019.06		Centre	Estate 4WD 274920		Center Bearing Support	538622
	2017.01-2019.06		Front;Rear	Estate 4WD 274920		Flexible Coupling	537627
	2017.01-2019.06		Front;Rear	Estate 4WD 274920		Flexible Coupling Kit	537627S
	2017.06-		Centre	Cabriolet RWD 274920		Center Bearing Support	538622
	2017.06-		Centre	Coupe 4WD 274920		Center Bearing Support	538622
	2017.06-		Rear	Cabriolet RWD 274920		Flexible Coupling	537847
	2017.06-		Front;Rear	Cabriolet RWD 274920		Flexible Coupling	537627
	2017.06-		Front;Rear	Coupe 4WD 274920		Flexible Coupling	537851
	2017.06-		Front;Rear	Cabriolet RWD 274920		Flexible Coupling Kit	537627S
	2017.10-		Centre	Cabriolet 4WD 274920		Center Bearing Support	538622
	2017.10-		Front;Rear	Cabriolet 4WD 274920		Flexible Coupling	537627
	2017.10-		Front;Rear	Cabriolet 4WD 274920		Flexible Coupling Kit	537627S
2.0 (137 kw)	1997.04-2000.06		Centre	Saloon RWD 111947		Center Bearing Support	538667
	1997.04-2000.06		Front	Saloon RWD 111947		Flexible Coupling	510571
	1997.04-2000.06		Rear	Saloon RWD 111947		Flexible Coupling	512678
	1997.04-2000.06		Front	Saloon RWD 111947	AT	Flexible Coupling Kit	510571S
	1997.04-2000.06		Front	Saloon RWD 111947	MT	Flexible Coupling Kit	537819S
	1997.04-2000.06		Front;Rear	Saloon RWD 111947		Flexible Coupling Kit	512673S
	1997.11-2000.07		Centre	Estate RWD 111947		Center Bearing Support	538667
	1997.11-2000.07		Front	Estate RWD 111947	AT	Flexible Coupling	510571
	1997.11-2000.07		Front	Estate RWD 111947	538111 and 510571 different structure	Flexible Coupling	538111
	1997.11-2000.07		Front;Rear	Estate RWD 111947	5AT	Flexible Coupling	512678
	1997.11-2000.07		Front	Estate RWD 111947	AT	Flexible Coupling Kit	510571S
	1997.11-2000.07		Front	Estate RWD 111947	MT	Flexible Coupling Kit	537819S
	1997.11-2000.07		Front;Rear	Estate RWD 111947		Flexible Coupling Kit	512673S
2.0 (145 kw)	2018.10-2023.10		Centre	Saloon RWD 264920		Center Bearing Support	538622
	2018.10-2023.10		Front;Rear	Saloon RWD 264920		Flexible Coupling Kit	537630S
	2019.06-		Centre	Coupe 4WD 264920		Center Bearing Support	538622
	2019.06-		Centre	Cabriolet 4WD 264920		Center Bearing Support	538622
	2019.06-		Front;Rear	Coupe 4WD 264920		Flexible Coupling	537627
	2019.06-		Front;Rear	Cabriolet 4WD 264920		Flexible Coupling	537627
	2019.06-		Front;Rear	Coupe 4WD 264920		Flexible Coupling Kit	537627S
	2019.06-		Front;Rear	Cabriolet 4WD 264920		Flexible Coupling Kit	537627S
	2019.06-		Front;Rear	Coupe RWD 264920		Flexible Coupling Kit	537630S
	2019.06-		Front;Rear	Cabriolet RWD 264920		Flexible Coupling Kit	537630S
	2019.06-2023.10	9AT	Rear	Saloon 4WD 264920		Propshaft	PS901706
	2019.06-2023.10	9AT	Rear	Estate 4WD 264920		Propshaft	PS901706
	2019.06-2023.10		Centre	Saloon RWD 264920		Center Bearing Support	538622
	2019.06-2023.10		Centre	Saloon 4WD 264920		Center Bearing Support	538622
	2019.06-2023.10		Centre	Estate RWD 264920		Center Bearing Support	538622
	2019.06-2023.10		Centre	Estate 4WD 264920		Center Bearing Support	538622

	YEAR	TRANSM.	FITTING POSITION	BODY STYLE & DRIVE TYPE & ENGINE	REMARKS	PRODUCT	GSP Ref.
MERCEDES-BENZ							
E200							
2.0 (145 kw)	2019.06-2023.10		Front;Rear	Saloon 4WD 264920		Flexible Coupling	537627
	2019.06-2023.10		Front;Rear	Estate 4WD 264920		Flexible Coupling	537627
	2019.06-2023.10		Front;Rear	Saloon 4WD 264920		Flexible Coupling Kit	537627S
	2019.06-2023.10		Front;Rear	Estate 4WD 264920		Flexible Coupling Kit	537627S
	2019.06-2023.10		Front;Rear	Saloon RWD 264920		Flexible Coupling Kit	537630S
	2019.06-2023.10		Front;Rear	Estate RWD 264920		Flexible Coupling Kit	537630S
2.0 (150 kw)	2023.10-		Front;Rear	Saloon 4WD 254920		Flexible Coupling	537627
	2024.02-		Front;Rear	Estate 4WD M 254.920		Flexible Coupling	537627
2.2 (75 kw)	1998.06-2002.03		Centre	Saloon RWD 611961		Center Bearing Support	538667
	1998.06-2002.03		Front;Rear	Saloon RWD 611961		Flexible Coupling	512678
	1998.06-2002.03		Front;Rear	Saloon RWD 611961		Flexible Coupling Kit	512673S
	2002.11-2005.07	AT	Front	Saloon RWD 646951		Propshaft	PS900364
	2002.11-2005.07		Centre	Saloon RWD 646951	512668 and 538160 different structure	Center Bearing Support	538667
	2002.11-2005.07		Front;Rear	Saloon RWD 646951		Flexible Coupling	512678
	2002.11-2005.07		Front;Rear	Saloon RWD 646951		Flexible Coupling Kit	512673S
2.2 (85 kw)	1999.08-2002.03		Centre	Saloon RWD 611961		Center Bearing Support	538667
	1999.08-2002.03		Front;Rear	Saloon RWD 611961		Flexible Coupling	512678
	1999.08-2002.03		Front;Rear	Saloon RWD 611961		Flexible Coupling Kit	512673S
2.2 (90 kw)	2002.07-2006.07	AT	Front	Saloon RWD 646951		Propshaft	PS900364
	2002.07-2006.07		Centre	Saloon RWD 646951	512668 and 538160 different structure	Center Bearing Support	538667
	2002.07-2006.07		Front;Rear	Saloon RWD 646951		Flexible Coupling	512678
	2002.07-2006.07		Front;Rear	Saloon RWD 646951		Flexible Coupling Kit	512673S
2.2 (100 kw)	2006.04-2009.07	AT	Front	Estate RWD 646820/646821		Propshaft	PS900364
	2006.04-2009.07		Centre	Estate RWD 646820/646821		Center Bearing Support	538667
	2006.04-2009.07		Front;Rear	Estate RWD 646820/646821		Flexible Coupling Kit	537794S
	2006.04-2011.12	AT	Front	Saloon RWD 646820/646821		Propshaft	PS900364
	2006.04-2011.12		Centre	Saloon RWD 646820/646821		Center Bearing Support	538667
	2006.04-2011.12		Front;Rear	Saloon RWD 646820/646821		Flexible Coupling Kit	537794S
	2009.01-2015.12		Centre	Saloon RWD 651925		Center Bearing Support	539927
	2009.01-2015.12		Front	Saloon RWD 651925	6MT	Flexible Coupling	512672
	2009.01-2015.12		Front	Saloon RWD 651925	9AT	Flexible Coupling	537630
	2009.01-2015.12		Front;Rear	Saloon RWD 651925	5AT;9AT;6MT;7AT	Flexible Coupling	512677
	2009.01-2015.12		Front	Saloon RWD 651925	5AT;9AT;6MT;7AT	Flexible Coupling Kit	537794S
	2009.01-2015.12		Rear	Saloon RWD 651925	537793S and 537889S different structure	Flexible Coupling Kit	537793S
	2009.01-2015.12		Rear	Saloon RWD 651925	537889S and 537793S different structure	Flexible Coupling Kit	537889S
	2009.01-2015.12		Front;Rear	Saloon RWD 651925	For OE No.0004110200	Flexible Coupling Kit	512677S
	2009.01-2015.12		Front;Rear	Saloon RWD 651925		Flexible Coupling Kit	537630S
	2009.01-2016.12		Centre	Estate RWD 651925		Center Bearing Support	539927
	2009.01-2016.12		Front	Estate RWD 651925		Flexible Coupling	537630
	2009.01-2016.12		Front;Rear	Estate RWD 651925	5AT;9AT;6MT;7AT	Flexible Coupling	512677
	2009.01-2016.12		Front	Estate RWD 651925	5AT;9AT;6MT;7AT	Flexible Coupling Kit	537794S
	2009.01-2016.12		Rear	Estate RWD 651925		Flexible Coupling Kit	537793S
	2009.01-2016.12		Front;Rear	Estate RWD 651925		Flexible Coupling Kit	512677S
	2009.01-2016.12		Front;Rear	Estate RWD 651925		Flexible Coupling Kit	537630S
E220							
2.0 (120 kw)	2016.01-2023.10		Rear	Saloon RWD 654920		Flexible Coupling	537630
	2016.01-2023.10		Front;Rear	Saloon RWD 654920		Flexible Coupling	537627
	2016.01-2023.10		Front;Rear	Saloon RWD 654920		Flexible Coupling Kit	537630S
	2016.07-2023.10		Front	Estate RWD 654920		Flexible Coupling	537630
	2016.07-2023.10		Front;Rear	Estate RWD 654920		Flexible Coupling Kit	537630S
	2016.10-2023.10		Centre	Saloon 4WD 654920		Center Bearing Support	538622
	2016.10-2023.10		Front	Saloon 4WD 654920		Flexible Coupling	537630
	2016.10-2023.10		Front;Rear	Saloon 4WD 654920		Flexible Coupling	537627
	2016.10-2023.10		Front;Rear	Saloon 4WD 654920		Flexible Coupling Kit	537630S
	2016.12-		Front	Coupe RWD 654920		Flexible Coupling	537630
	2016.12-		Front;Rear	Coupe RWD 654920		Flexible Coupling Kit	537630S
	2017.06-		Front	Cabriolet RWD 654920		Flexible Coupling	537630
	2017.06-		Front;Rear	Cabriolet RWD 654920		Flexible Coupling Kit	537630S
2.0 (143 kw)	2016.01-2023.10		Rear	Saloon RWD 654920		Flexible Coupling	537630
	2016.01-2023.10		Front;Rear	Saloon RWD 654920		Flexible Coupling	537627
	2016.01-2023.10		Front;Rear	Saloon RWD 654920	Inner diameter:48.5mm	Flexible Coupling Kit	537627S
	2016.01-2023.10		Front;Rear	Saloon RWD 654920	Inner diameter:57.5mm	Flexible Coupling Kit	537630S
	2016.07-2023.10		Front	Estate RWD 654920		Flexible Coupling	537630
	2016.07-2023.10		Front;Rear	Estate RWD 654920		Flexible Coupling Kit	537630S

	YEAR	TRANSM.	FITTING POSITION	BODY STYLE & DRIVE TYPE & ENGINE	REMARKS	PRODUCT	GSP Ref.
MERCEDES-BENZ **E220**							
2.0 (143 kw)	2016.10-2023.10		Centre	Saloon 4WD 654920		Center Bearing Support	538622
	2016.10-2023.10		Front	Saloon 4WD 654920		Flexible Coupling	537630
	2016.10-2023.10		Front;Rear	Saloon 4WD 654920		Flexible Coupling	537627
	2016.10-2023.10		Front;Rear	Saloon 4WD 654920		Flexible Coupling Kit	537630S
	2016.12-		Front	Coupe RWD 654920		Flexible Coupling	537630
	2016.12-		Front;Rear	Coupe RWD 654920		Flexible Coupling Kit	537630S
	2017.01-		Front	Coupe 4WD 654920		Flexible Coupling	537630
	2017.01-		Front;Rear	Coupe 4WD 654920		Flexible Coupling	537627
	2017.01-		Front;Rear	Coupe 4WD 654920		Flexible Coupling Kit	537630S
	2017.01-2023.10		Centre	Estate 4WD 654920		Center Bearing Support	538622
	2017.01-2023.10		Front;Rear	Estate 4WD 654920		Flexible Coupling	537627
	2017.01-2023.10		Front;Rear	Estate 4WD 654920		Flexible Coupling Kit	537627S
	2017.06-		Front	Cabriolet RWD 654920		Flexible Coupling	537630
	2017.06-		Front;Rear	Cabriolet RWD 654920		Flexible Coupling Kit	537630S
	2017.10-		Front	Cabriolet 4WD 654920		Flexible Coupling	537630
	2017.10-		Front;Rear	Cabriolet 4WD 654920		Flexible Coupling	537627
	2017.10-		Front;Rear	Cabriolet 4WD 654920		Flexible Coupling Kit	537630S
2.0 (145 kw)	2023.06-		Front;Rear	Saloon 4WD 654820		Flexible Coupling	537627
	2023.10-		Front;Rear	Estate 4WD 654820		Flexible Coupling	537627
2.0 (147 kw)	2022.02-2023.10		Centre	Estate 4WD 654820		Center Bearing Support	538622
	2022.02-2023.10		Centre	Saloon 4WD 654820		Center Bearing Support	538622
	2022.02-2023.10		Front;Rear	Estate 4WD 654820		Flexible Coupling	537627
	2022.02-2023.10		Front;Rear	Saloon RWD 654820		Flexible Coupling	537627
	2022.02-2023.10		Front;Rear	Saloon 4WD 654820		Flexible Coupling	537627
	2022.02-2023.10		Front;Rear	Estate 4WD 654820		Flexible Coupling Kit	537627S
	2022.02-2023.10		Front;Rear	Saloon RWD 654820		Flexible Coupling Kit	537627S
	2022.02-2023.10		Front;Rear	Saloon 4WD 654820		Flexible Coupling Kit	537627S
	2022.02-2023.10		Front;Rear	Estate RWD 654820		Flexible Coupling Kit	537630S
2.2 (55 kw)	1995.07-1998.05		Front	Saloon RWD 604912		Flexible Coupling	510569
	1995.07-1998.05		Front	Saloon RWD 604912	Chassis no. from:A 612071,MT,not for taxis	Flexible Coupling	512326
	1995.07-1998.05		Front	Saloon RWD 604912		Flexible Coupling	517747
	1995.07-1998.05		Rear	Saloon RWD 604912		Flexible Coupling	510460
	1995.07-1998.05		Front	Saloon RWD 604912		Flexible Coupling Kit	510578S
	1995.07-1998.05		Front	Saloon RWD 604912		Flexible Coupling Kit	537791S
	1995.07-1998.05		Front	Saloon RWD 604912	Chassis no. to:A 612070,MT,not for taxis	Flexible Coupling Kit	537820S
	1995.07-1998.05		Front	Saloon RWD 604912	MT,for taxis	Flexible Coupling Kit	537821S
	1995.07-1998.05		Rear	Saloon RWD 604912		Flexible Coupling Kit	510459S
	1995.07-1998.05		Front;Rear	Saloon RWD 604912		Flexible Coupling Kit	510570S
2.2 (70 kw)	1995.07-1998.05		Centre	Saloon RWD 604912		Center Bearing Support	539004
	1995.07-1998.05		Front	Saloon RWD 604912		Flexible Coupling	510569
	1995.07-1998.05		Front	Saloon RWD 604912	Chassis no. from:A 612071,MT,not for taxis	Flexible Coupling	512326
	1995.07-1998.05		Front	Saloon RWD 604912		Flexible Coupling	517747
	1995.07-1998.05		Front	Saloon RWD 604912	MT,not for taxis	Flexible Coupling	538136
	1995.07-1998.05		Rear	Saloon RWD 604912		Flexible Coupling	510460
	1995.07-1998.05		Front	Saloon RWD 604912		Flexible Coupling Kit	510578S
	1995.07-1998.05		Front	Saloon RWD 604912		Flexible Coupling Kit	537791S
	1995.07-1998.05		Front	Saloon RWD 604912	Chassis no. to:A 612070,MT,not for taxis	Flexible Coupling Kit	537820S
	1995.07-1998.05		Front	Saloon RWD 604912	MT,for taxis	Flexible Coupling Kit	537821S
	1995.07-1998.05		Rear	Saloon RWD 604912		Flexible Coupling Kit	510459S
	1995.07-1998.05		Front;Rear	Saloon RWD 604912		Flexible Coupling Kit	510570S
2.2 (92 kw)	1998.06-1999.07		Centre	Saloon RWD 611961		Center Bearing Support	538667
	1998.06-1999.07		Centre	Estate RWD 611961		Center Bearing Support	538667
	1998.06-1999.07		Front	Estate RWD 611961	538111 and 512678 different structure	Flexible Coupling	538111
	1998.06-1999.07		Rear	Estate RWD 611961		Flexible Coupling	510458
	1998.06-1999.07		Front;Rear	Saloon RWD 611961		Flexible Coupling	512677
	1998.06-1999.07		Front;Rear	Saloon RWD 611961		Flexible Coupling	512678
	1998.06-1999.07		Front;Rear	Estate RWD 611961	512678 and 538111 different structure	Flexible Coupling	512678
	1998.06-1999.07		Front;Rear	Saloon RWD 611961	Inner diameter:50mm	Flexible Coupling Kit	512673S
	1998.06-1999.07		Front;Rear	Estate RWD 611961		Flexible Coupling Kit	512673S
	1998.06-1999.07		Front;Rear	Saloon RWD 611961	Inner diameter:57.5mm	Flexible Coupling Kit	512677S
2.2 (100 kw)	1999.05-2003.03		Front;Rear	Estate RWD 611961		Flexible Coupling	512678
	1999.05-2003.03		Front;Rear	Estate RWD 611961		Flexible Coupling Kit	512673S
	1999.07-2002.03		Front;Rear	Saloon RWD 611961		Flexible Coupling	512677
	1999.07-2002.03		Front;Rear	Saloon RWD 611961	Inner diameter:50mm	Flexible Coupling Kit	512673S

	YEAR	TRANSM.	FITTING POSITION	BODY STYLE & DRIVE TYPE & ENGINE	REMARKS	PRODUCT	GSP Ref.
MERCEDES-BENZ **E220**							
2.2 (100 kw)	1999.07-2002.03		Front;Rear	Saloon RWD 611961	Inner diameter:57.5mm	Flexible Coupling Kit	512677S
	2002.03-2008.12	AT	Front	Saloon RWD 646961		Propshaft	PS900364
	2002.03-2008.12		Centre	Saloon RWD 646961		Center Bearing Support	538667
	2002.03-2008.12		Rear	Saloon RWD 646961		Flexible Coupling Kit	537793S
	2002.03-2008.12		Front;Rear	Saloon RWD 646961		Flexible Coupling Kit	537794S
	2003.03-2009.07	AT	Front	Estate RWD 646961		Propshaft	PS900364
	2003.03-2009.07		Centre	Estate RWD 646961		Center Bearing Support	538667
	2003.03-2009.07		Rear	Estate RWD 646961		Flexible Coupling Kit	537793S
	2003.03-2009.07		Front;Rear	Estate RWD 646961		Flexible Coupling Kit	537794S
2.2 (105 kw)	1999.07-2002.12		Front;Rear	Platform/Chassis RWD OM 611.961		Flexible Coupling	512678
	1999.07-2002.12		Front;Rear	Platform/Chassis RWD OM 611.961		Flexible Coupling Kit	512673S
	1999.07-2003.03		Centre	Estate RWD 611961		Center Bearing Support	538667
	1999.07-2003.03		Rear	Estate RWD 611961		Flexible Coupling	510458
	1999.07-2003.03		Front;Rear	Estate RWD 611961		Flexible Coupling	512678
	1999.07-2003.03		Front;Rear	Estate RWD 611961		Flexible Coupling Kit	512673S
	1999.08-2002.03		Centre	Saloon RWD 611961		Center Bearing Support	538667
	1999.08-2002.03		Front;Rear	Saloon RWD 611961		Flexible Coupling	512677
	1999.08-2002.03		Front;Rear	Saloon RWD 611961		Flexible Coupling	512678
	1999.08-2002.03		Front;Rear	Saloon RWD 611961	Inner diameter:50mm	Flexible Coupling Kit	512673S
	1999.08-2002.03		Front;Rear	Saloon RWD 611961	Inner diameter:57.5mm	Flexible Coupling Kit	512677S
2.2 (110 kw)	1993.06-1995.06		Centre	Saloon RWD 111960		Center Bearing Support	538997
	1993.06-1995.06		Front	Saloon RWD 111960		Flexible Coupling	510436
	1993.06-1995.06		Front	Saloon RWD 111960		Flexible Coupling	510569
	1993.06-1995.06		Front	Saloon RWD 111960		Flexible Coupling Kit	510434S
	1993.06-1995.06		Front;Rear	Saloon RWD 111960		Flexible Coupling Kit	510570S
	1993.06-1996.01		Centre	Estate RWD 111960		Center Bearing Support	538997
	1993.06-1996.01		Front	Estate RWD 111960		Flexible Coupling	510436
	1993.06-1996.01		Front	Estate RWD 111960		Flexible Coupling	510569
	1993.06-1996.01		Front	Estate RWD 111960		Flexible Coupling Kit	510434S
	1993.06-1996.01		Front;Rear	Estate RWD 111960		Flexible Coupling Kit	510570S
	1993.06-1996.07		Centre	Cabriolet RWD 111960		Center Bearing Support	538997
	1993.06-1996.07		Centre	Coupe RWD 111960		Center Bearing Support	538997
	1993.06-1996.07		Front	Cabriolet RWD 111960		Flexible Coupling	510436
	1993.06-1996.07		Front	Coupe RWD 111960		Flexible Coupling	510436
	1993.06-1996.07		Front	Cabriolet RWD 111960		Flexible Coupling	510569
	1993.06-1996.07		Front	Coupe RWD 111960		Flexible Coupling	510569
	1993.06-1996.07		Front	Cabriolet RWD 111960		Flexible Coupling Kit	510434S
	1993.06-1996.07		Front	Coupe RWD 111960		Flexible Coupling Kit	510434S
	1993.06-1996.07		Front;Rear	Cabriolet RWD 111960		Flexible Coupling Kit	510570S
	1993.06-1996.07		Front;Rear	Coupe RWD 111960		Flexible Coupling Kit	510570S
	2002.04-2006.07	AT	Front	Saloon RWD 646961		Propshaft	PS900364
	2002.04-2006.07		Centre	Saloon RWD 646961		Center Bearing Support	538667
	2002.04-2006.07		Rear	Saloon RWD 646961		Flexible Coupling Kit	537793S
	2002.04-2006.07		Front;Rear	Saloon RWD 646961		Flexible Coupling Kit	537794S
	2003.04-2006.07	AT	Front	Estate RWD 646961		Propshaft	PS900364
	2003.04-2006.07		Centre	Estate RWD 646961		Center Bearing Support	538667
	2003.04-2006.07		Front	Estate RWD 646961	7AT	Flexible Coupling	512672
	2003.04-2006.07		Rear	Estate RWD 646961	537793S and 537889S different structure	Flexible Coupling Kit	537793S
	2003.04-2006.07		Rear	Estate RWD 646961	537889S and 537793S different structure	Flexible Coupling Kit	537889S
	2003.04-2006.07		Front;Rear	Estate RWD 646961		Flexible Coupling Kit	537794S
	2003.10-2006.07		Centre	Chassis Cabin RWD 646961	Height:57.7mm	Center Bearing Support	538667
	2003.10-2006.07		Front	Chassis Cabin RWD 646961	5AT;6MT	Flexible Coupling Kit	537794S
	2003.10-2006.07		Rear	Chassis Cabin RWD 646961		Flexible Coupling Kit	537793S
2.2 (120 kw)	2003.03-2008.12		Centre	Saloon RWD 646821		Center Bearing Support	538667
	2003.03-2008.12		Rear	Saloon RWD 646821		Flexible Coupling Kit	537793S
	2003.03-2008.12		Front;Rear	Saloon RWD 646821		Flexible Coupling Kit	537794S
	2003.03-2009.07		Centre	Estate RWD 646821		Center Bearing Support	538667
	2003.03-2009.07		Rear	Estate RWD 646821		Flexible Coupling Kit	537793S
	2003.03-2009.07		Front;Rear	Estate RWD 646821		Flexible Coupling Kit	537794S
	2009.01-2014.08		Centre	Estate RWD 651924		Center Bearing Support	539927
	2009.01-2014.08		Front	Estate RWD 651924	6MT	Flexible Coupling	512672
	2009.01-2014.08		Front	Estate RWD 651924	9AT	Flexible Coupling	537630
	2009.01-2014.08		Front;Rear	Estate RWD 651924	5AT;9AT;6MT;7AT	Flexible Coupling	512677
	2009.01-2014.08		Front	Estate RWD 651924	5AT;9AT;6MT;7AT	Flexible Coupling Kit	537794S

	YEAR	TRANSM.	FITTING POSITION	BODY STYLE & DRIVE TYPE & ENGINE	REMARKS	PRODUCT	GSP Ref.
MERCEDES-BENZ **E220**							
2.2 (120 kw)	2009.01-2014.08		Rear	Estate RWD 651924	537793S and 537889S different structure	Flexible Coupling Kit	537793S
	2009.01-2014.08		Rear	Estate RWD 651924	537889S and 537793S different structure	Flexible Coupling Kit	537889S
	2009.01-2014.08		Front;Rear	Estate RWD 651924	For OE No.0004110200	Flexible Coupling Kit	512677S
	2009.01-2014.08		Front;Rear	Estate RWD 651924		Flexible Coupling Kit	537630S
	2009.01-2015.12		Centre	Saloon RWD 651924		Center Bearing Support	539927
	2009.01-2015.12		Front	Saloon RWD 651924		Flexible Coupling	537630
	2009.01-2015.12		Front;Rear	Saloon RWD 651924		Flexible Coupling	512677
	2009.01-2015.12		Rear	Saloon RWD 651924		Flexible Coupling Kit	537793S
	2009.01-2015.12		Front;Rear	Saloon RWD 651924		Flexible Coupling Kit	512677S
	2009.01-2015.12		Front;Rear	Saloon RWD 651924		Flexible Coupling Kit	537630S
	2010.02-2014.12		Centre	Coupe RWD 651911		Center Bearing Support	539927
	2010.02-2014.12		Front;Rear	Coupe RWD 651911	5AT;6MT;7AT	Flexible Coupling	512677
	2010.02-2014.12		Front	Coupe RWD 651911	5AT;6MT;7AT	Flexible Coupling Kit	537794S
	2010.02-2014.12		Front;Rear	Coupe RWD 651911		Flexible Coupling Kit	512677S
	2010.02-2016.12		Centre	Cabriolet RWD 651911		Center Bearing Support	539927
	2010.02-2016.12		Front	Cabriolet RWD 651911		Flexible Coupling	537630
	2010.02-2016.12		Front;Rear	Cabriolet RWD 651911	5AT;6MT;7AT	Flexible Coupling	512677
	2010.02-2016.12		Front	Cabriolet RWD 651911	5AT;6MT;7AT	Flexible Coupling Kit	537794S
	2010.02-2016.12		Front;Rear	Cabriolet RWD 651911		Flexible Coupling Kit	512677S
	2010.02-2016.12		Front;Rear	Cabriolet RWD 651911		Flexible Coupling Kit	537630S
2.2 (125 kw)	2006.04-2009.07	AT	Front	Saloon RWD 646821		Propshaft	PS900364
	2006.04-2009.07		Centre	Saloon RWD 646821		Center Bearing Support	538667
	2006.04-2009.07		Centre	Estate RWD 646821		Center Bearing Support	538667
	2006.04-2009.07		Centre	Chassis Cabin RWD 646821	512668 and 538160 different structure	Center Bearing Support	538667
	2006.04-2009.07		Front	Estate RWD 646821	7AT	Flexible Coupling	512672
	2006.04-2009.07		Rear	Saloon RWD 646821		Flexible Coupling Kit	537793S
	2006.04-2009.07		Rear	Estate RWD 646821	537793S and 537889S different structure	Flexible Coupling Kit	537793S
	2006.04-2009.07		Rear	Estate RWD 646821	537889S and 537793S different structure	Flexible Coupling Kit	537889S
	2006.04-2009.07		Front;Rear	Saloon RWD 646821		Flexible Coupling Kit	537794S
	2006.04-2009.07		Front;Rear	Estate RWD 646821		Flexible Coupling Kit	537794S
	2006.04-2009.07		Front;Rear	Chassis Cabin RWD 646821		Flexible Coupling Kit	537794S
	2009.01-2016.12		Centre	Saloon RWD 651924		Center Bearing Support	539927
	2009.01-2016.12		Centre	Estate RWD 651924		Center Bearing Support	539927
	2009.01-2016.12		Front	Saloon RWD 651924	5AT;9AT;6MT;7AT	Flexible Coupling	512672
	2009.01-2016.12		Front	Saloon RWD 651924	9AT	Flexible Coupling	537630
	2009.01-2016.12		Front	Estate RWD 651924		Flexible Coupling	537630
	2009.01-2016.12		Front;Rear	Saloon RWD 651924	5AT;6MT;7AT	Flexible Coupling	512677
	2009.01-2016.12		Front;Rear	Estate RWD 651924	5AT;9AT;6MT;7AT	Flexible Coupling	512677
	2009.01-2016.12		Front	Saloon RWD 651924	5AT;6MT;7AT	Flexible Coupling Kit	537794S
	2009.01-2016.12		Front	Estate RWD 651924	5AT;9AT;6MT;7AT	Flexible Coupling Kit	537794S
	2009.01-2016.12		Rear	Saloon RWD 651924	537793S and 537889S different structure	Flexible Coupling Kit	537793S
	2009.01-2016.12		Rear	Estate RWD 651924		Flexible Coupling Kit	537793S
	2009.01-2016.12		Rear	Saloon RWD 651924	537889S and 537793S different structure	Flexible Coupling Kit	537889S
	2009.01-2016.12		Front;Rear	Saloon RWD 651924	For OE No.0004110200	Flexible Coupling Kit	512677S
	2009.01-2016.12		Front;Rear	Estate RWD 651924		Flexible Coupling Kit	512677S
	2009.01-2016.12		Front;Rear	Saloon RWD 651924		Flexible Coupling Kit	537630S
	2009.01-2016.12		Front;Rear	Estate RWD 651924		Flexible Coupling Kit	537630S
	2010.01-2016.12		Centre	Cabriolet RWD 651911		Center Bearing Support	539927
	2010.01-2016.12		Centre	Coupe RWD 651911		Center Bearing Support	539927
	2010.01-2016.12		Front	Cabriolet RWD 651911		Flexible Coupling	537630
	2010.01-2016.12		Front	Coupe RWD 651911		Flexible Coupling	537630
	2010.01-2016.12		Rear	Cabriolet RWD 651911		Flexible Coupling	537843
	2010.01-2016.12		Front;Rear	Cabriolet RWD 651911	5AT;6MT;7AT	Flexible Coupling	512677
	2010.01-2016.12		Front;Rear	Coupe RWD 651911	5AT;6MT;7AT	Flexible Coupling	512677
	2010.01-2016.12		Front	Cabriolet RWD 651911	5AT;6MT;7AT	Flexible Coupling Kit	537794S
	2010.01-2016.12		Front	Coupe RWD 651911	5AT;6MT;7AT	Flexible Coupling Kit	537794S
	2010.01-2016.12		Rear	Cabriolet RWD 651911		Flexible Coupling Kit	537843S
	2010.01-2016.12		Front;Rear	Cabriolet RWD 651911		Flexible Coupling Kit	512677S
	2010.01-2016.12		Front;Rear	Coupe RWD 651911		Flexible Coupling Kit	512677S
	2010.01-2016.12		Front;Rear	Cabriolet RWD 651911		Flexible Coupling Kit	537630S
	2010.01-2016.12		Front;Rear	Coupe RWD 651911		Flexible Coupling Kit	537630S
	2014.12-2016.12	7AT	Front	Estate 4WD 651924		Propshaft	PS901588
	2014.12-2016.12		Centre	Estate 4WD 651924		Center Bearing Support	538668
	2014.12-2016.12		Front	Estate 4WD 651924		Flexible Coupling	537630

	YEAR	TRANSM.	FITTING POSITION	BODY STYLE & DRIVE TYPE & ENGINE	REMARKS	PRODUCT	GSP Ref.
MERCEDES-BENZ							
E220							
2.2 (125 kw)	2014.12-2016.12		Front;Rear	Estate 4WD 651924	5AT;9AT;6MT;7AT	Flexible Coupling	512677
	2014.12-2016.12		Front	Estate 4WD 651924	5AT;9AT;6MT;7AT	Flexible Coupling Kit	537794S
	2014.12-2016.12		Front;Rear	Estate 4WD 651924		Flexible Coupling Kit	512677S
	2014.12-2016.12		Front;Rear	Estate 4WD 651924		Flexible Coupling Kit	537630S
	2015.01-2015.12	7AT	Front	Saloon 4WD 651924		Propshaft	PS901588
	2015.01-2015.12		Centre	Saloon 4WD 651924		Center Bearing Support	539927
	2015.01-2015.12		Front	Saloon 4WD 651924		Flexible Coupling	537630
	2015.01-2015.12		Front;Rear	Saloon 4WD 651924	5AT;9AT;6MT;7AT	Flexible Coupling	512677
	2015.01-2015.12		Front	Saloon 4WD 651924	5AT;9AT;6MT;7AT	Flexible Coupling Kit	537794S
	2015.01-2015.12		Front;Rear	Saloon 4WD 651924		Flexible Coupling Kit	512677S
	2015.01-2015.12		Front;Rear	Saloon 4WD 651924		Flexible Coupling Kit	537630S
2.2 (130 kw)	2014.05-2015.12		Centre	Saloon RWD 651924		Center Bearing Support	539927
	2014.05-2015.12		Front	Saloon RWD 651924		Flexible Coupling	537630
	2014.05-2015.12		Front;Rear	Saloon RWD 651924	5AT;9AT;6MT;7AT	Flexible Coupling	512677
	2014.05-2015.12		Front	Saloon RWD 651924	5AT;9AT;6MT;7AT	Flexible Coupling Kit	537794S
	2014.05-2015.12		Front;Rear	Saloon RWD 651924		Flexible Coupling Kit	512677S
	2014.05-2015.12		Front;Rear	Saloon RWD 651924		Flexible Coupling Kit	537630S
	2014.05-2016.12		Centre	Cabriolet RWD 651911		Center Bearing Support	539927
	2014.05-2016.12		Centre	Coupe RWD 651911		Center Bearing Support	539927
	2014.05-2016.12		Front	Coupe RWD 651911		Flexible Coupling	537630
	2014.05-2016.12		Front;Rear	Cabriolet RWD 651911	5AT;6MT;7AT	Flexible Coupling	512677
	2014.05-2016.12		Front;Rear	Coupe RWD 651911	5AT;6MT;7AT	Flexible Coupling	512677
	2014.05-2016.12		Front	Cabriolet RWD 651911	5AT;6MT;7AT	Flexible Coupling Kit	537794S
	2014.05-2016.12		Front	Coupe RWD 651911	5AT;6MT;7AT	Flexible Coupling Kit	537794S
	2014.05-2016.12		Front;Rear	Cabriolet RWD 651911		Flexible Coupling Kit	512677S
	2014.05-2016.12		Front;Rear	Coupe RWD 651911	Inner diameter:57.5mm	Flexible Coupling Kit	512677S
	2014.05-2016.12		Front;Rear	Cabriolet RWD 651911		Flexible Coupling Kit	537630S
	2014.05-2016.12		Front;Rear	Coupe RWD 651911		Flexible Coupling Kit	537630S
	2014.05-2016.12		Front;Rear	Coupe RWD 651911	Inner diameter:69.5mm	Flexible Coupling Kit	537832S
	2015.05-2016.12		Centre	Estate RWD 651924		Center Bearing Support	539927
	2015.05-2016.12		Front	Estate RWD 651924		Flexible Coupling	537630
	2015.05-2016.12		Front;Rear	Estate RWD 651924		Flexible Coupling	512677
	2015.05-2016.12		Front;Rear	Estate RWD 651924		Flexible Coupling Kit	512677S
	2015.05-2016.12		Front;Rear	Estate RWD 651924		Flexible Coupling Kit	537630S
E230							
2.3 (110 kw)	1995.07-1997.10		Centre	Saloon RWD 111970		Center Bearing Support	539004
	1995.07-1997.10		Front	Saloon RWD 111970		Flexible Coupling	510569
	1995.07-1997.10		Front	Saloon RWD 111970		Flexible Coupling Kit	537821S
	1995.07-1997.10		Front;Rear	Saloon RWD 111970		Flexible Coupling Kit	510570S
	1996.06-1997.10		Centre	Estate RWD 111970		Center Bearing Support	539004
	1996.06-1997.10		Front	Estate RWD 111970		Flexible Coupling	510569
	1996.06-1997.10		Front	Estate RWD 111970	MT	Flexible Coupling	512326
	1996.06-1997.10		Front	Estate RWD 111970		Flexible Coupling Kit	510578S
	1996.06-1997.10		Front;Rear	Estate RWD 111970		Flexible Coupling Kit	510570S
2.5 (150 kw)	2007.05-2009.07		Centre	Estate RWD 272922	Height:57.7mm	Center Bearing Support	538667
	2007.05-2009.07		Front;Rear	Estate RWD 272922		Flexible Coupling	512678
	2007.05-2009.07		Front;Rear	Estate RWD 272922		Flexible Coupling Kit	512673S
	2007.09-2008.12		Centre	Saloon RWD 272922	Height:57.7mm	Center Bearing Support	538667
	2007.09-2008.12		Front;Rear	Saloon RWD 272922		Flexible Coupling	512678
	2007.09-2008.12		Front;Rear	Saloon RWD 272922		Flexible Coupling Kit	512673S
E240							
2.4 (125 kw)	1997.04-2000.06		Centre	Saloon RWD 112911	Height:57.7mm	Center Bearing Support	538667
	1997.04-2000.06		Front	Saloon RWD 112911		Flexible Coupling	510569
	1997.04-2000.06		Front	Saloon RWD 112911		Flexible Coupling Kit	510578S
	1997.04-2000.06		Front;Rear	Saloon RWD 112911		Flexible Coupling Kit	510570S
	1997.10-2003.03		Centre	Estate RWD 112911	Height:57.7mm	Center Bearing Support	538667
	1997.10-2003.03		Front	Estate RWD 112911		Flexible Coupling	510569
	1997.10-2003.03		Front	Estate RWD 112911	MT	Flexible Coupling	512326
	1997.10-2003.03		Front	Estate RWD 112911		Flexible Coupling Kit	510578S
	1997.10-2003.03		Front;Rear	Estate RWD 112911		Flexible Coupling Kit	510570S
2.6 (125 kw)	2000.07-2002.03		Centre	Saloon RWD 112914	Height:57.7mm	Center Bearing Support	538667
	2000.07-2002.03		Front;Rear	Saloon RWD 112914		Flexible Coupling	512678
	2000.07-2002.03		Front;Rear	Saloon RWD 112914		Flexible Coupling Kit	512673S
	2000.08-2003.05		Centre	Estate RWD 112914	Height:57.7mm	Center Bearing Support	538667

	YEAR	TRANSM.	FITTING POSITION	BODY STYLE & DRIVE TYPE & ENGINE	REMARKS	PRODUCT	GSP Ref.
MERCEDES-BENZ							
E240							
2.6 (125 kw)	2000.08-2003.05		Front;Rear	Estate RWD 112914		Flexible Coupling	512678
	2000.08-2003.05		Front;Rear	Estate RWD 112914		Flexible Coupling Kit	512673S
2.6 (130 kw)	2002.04-2006.07	AT	Front	Saloon RWD 112913		Propshaft	PS900364
	2002.04-2006.07		Centre	Saloon RWD 112913	Height:57.7mm	Center Bearing Support	538667
	2002.04-2006.07		Front;Rear	Saloon RWD 112913		Flexible Coupling	512678
	2002.04-2006.07		Front;Rear	Saloon RWD 112913		Flexible Coupling Kit	512673S
	2003.06-2006.07	AT	Front	Estate RWD 112913		Propshaft	PS900364
	2003.06-2006.07		Centre	Estate RWD 112913	Height:57.7mm	Center Bearing Support	538667
	2003.06-2006.07		Front;Rear	Estate RWD 112913		Flexible Coupling	512678
	2003.06-2006.07		Front;Rear	Estate RWD 112913		Flexible Coupling Kit	512673S
	2003.08-2005.07	5AT	Front	Saloon 4WD 112917		Propshaft	PS900351
	2003.08-2005.07		Centre	Saloon 4WD 112917	Height:57.7mm	Center Bearing Support	538667
	2003.08-2005.07		Front;Rear	Saloon 4WD 112917		Flexible Coupling	512678
	2003.08-2005.07		Front;Rear	Saloon 4WD 112917		Flexible Coupling Kit	512673S
	2003.08-2006.07	5AT	Front	Estate 4WD 112917		Propshaft	PS900351
	2003.08-2006.07		Centre	Estate 4WD 112917	Height:57.7mm	Center Bearing Support	538667
	2003.08-2006.07		Front;Rear	Estate 4WD 112917		Flexible Coupling	512678
	2003.08-2006.07		Front;Rear	Estate 4WD 112917		Flexible Coupling Kit	512673S
E250							
1.8 (150 kw)	2009.01-2013.12		Centre	Estate RWD 271860		Center Bearing Support	538668
	2009.01-2013.12		Front;Rear	Estate RWD 271860	5AT;6MT;7AT	Flexible Coupling	512677
	2009.01-2013.12		Front;Rear	Estate RWD 271860		Flexible Coupling Kit	512677S
	2009.01-2013.12		Front;Rear	Estate RWD 271860	5AT;6MT;7AT	Flexible Coupling Kit	537794S
	2009.01-2015.12	AT	Rear	Saloon RWD 271860		Propshaft	PS901479
	2009.01-2015.12		Centre	Saloon RWD 271860		Center Bearing Support	538668
	2009.01-2015.12		Front;Rear	Saloon RWD 271860	5AT;6MT;7AT	Flexible Coupling	512677
	2009.01-2015.12		Front;Rear	Saloon RWD 271860		Flexible Coupling Kit	512677S
	2009.01-2015.12		Front;Rear	Saloon RWD 271860	5AT;6MT;7AT	Flexible Coupling Kit	537794S
	2009.01-2016.12		Centre	Coupe RWD 271860		Center Bearing Support	538668
	2009.01-2016.12		Front;Rear	Coupe RWD 271860		Flexible Coupling	512677
	2009.01-2016.12		Front;Rear	Coupe RWD 271860		Flexible Coupling Kit	512677S
	2009.01-2016.12		Front;Rear	Coupe RWD 271860		Flexible Coupling Kit	537794S
	2010.01-2016.12		Centre	Cabriolet RWD 271860		Center Bearing Support	538668
	2010.01-2016.12		Front;Rear	Cabriolet RWD 271860		Flexible Coupling	512677
	2010.01-2016.12		Front;Rear	Cabriolet RWD 271860		Flexible Coupling Kit	512677S
	2010.01-2016.12		Front;Rear	Cabriolet RWD 271860		Flexible Coupling Kit	537794S
2.0 (155 kw)	2013.01-2016.12		Centre	Estate RWD 274920		Center Bearing Support	538668
	2013.01-2016.12		Centre	Saloon RWD 274920		Center Bearing Support	538668
	2013.03-2016.12		Centre	Cabriolet RWD 274920		Center Bearing Support	538668
	2013.03-2016.12		Centre	Coupe RWD 274920		Center Bearing Support	538668
	2016.07-2018.11		Front;Rear	Estate RWD 274920		Flexible Coupling	538510
	2016.07-2023.10		Centre	Saloon RWD 274920		Center Bearing Support	538622
	2016.07-2023.10		Front;Rear	Saloon RWD 274920		Flexible Coupling	538510
2.2 (145 kw)	2014.01-2015.12		Front	Saloon RWD OM 651.924		Flexible Coupling Kit	537851S
	2014.07-2015.12		Front	Saloon 4WD OM 651.924		Flexible Coupling Kit	537851S
2.2 (150 kw)	2009.01-2016.12		Centre	Saloon RWD 651924		Center Bearing Support	538668
	2009.01-2016.12		Front	Saloon RWD 651924		Flexible Coupling	537851
	2009.01-2016.12		Front	Coupe RWD 651911		Flexible Coupling	537851
	2009.01-2016.12		Front	Estate RWD 651924		Flexible Coupling	537851
	2009.01-2016.12		Rear	Saloon RWD 651924		Flexible Coupling	537843
	2009.01-2016.12		Rear	Coupe RWD 651911		Flexible Coupling	537843
	2009.01-2016.12		Rear	Estate RWD 651924		Flexible Coupling	537843
	2009.01-2016.12		Front;Rear	Saloon RWD 651924		Flexible Coupling	533884
	2009.01-2016.12		Front;Rear	Coupe RWD 651911		Flexible Coupling	533884
	2009.01-2016.12		Front;Rear	Estate RWD 651924		Flexible Coupling	533884
	2009.01-2016.12		Front	Saloon RWD 651924		Flexible Coupling Kit	537851S
	2009.01-2016.12		Front	Coupe RWD 651911		Flexible Coupling Kit	537851S
	2009.01-2016.12		Front	Estate RWD 651924		Flexible Coupling Kit	537851S
	2009.01-2016.12		Rear	Saloon RWD 651924		Flexible Coupling Kit	533884S
	2009.01-2016.12		Rear	Coupe RWD 651911		Flexible Coupling Kit	533884S
	2009.01-2016.12		Rear	Estate RWD 651924		Flexible Coupling Kit	533884S
	2009.01-2016.12		Rear	Saloon RWD 651924		Flexible Coupling Kit	537843S
	2009.01-2016.12		Rear	Coupe RWD 651911		Flexible Coupling Kit	537843S
	2009.01-2016.12		Rear	Estate RWD 651924		Flexible Coupling Kit	537843S

	YEAR	TRANSM.	FITTING POSITION	BODY STYLE & DRIVE TYPE & ENGINE	REMARKS	PRODUCT	GSP Ref.
MERCEDES-BENZ **E250**							
2.2 (150 kw)	2009.01-2016.12		Front;Rear	Saloon RWD 651924		Flexible Coupling Kit	537832S
	2009.01-2016.12		Front;Rear	Coupe RWD 651911		Flexible Coupling Kit	537832S
	2009.01-2016.12		Front;Rear	Estate RWD 651924		Flexible Coupling Kit	537832S
	2010.01-2016.12		Front	Cabriolet RWD 651911		Flexible Coupling	537851
	2010.01-2016.12		Rear	Cabriolet RWD 651911		Flexible Coupling	537843
	2010.01-2016.12		Front;Rear	Cabriolet RWD 651911		Flexible Coupling	533884
	2010.01-2016.12		Rear	Cabriolet RWD 651911		Flexible Coupling Kit	533884S
	2010.01-2016.12		Rear	Cabriolet RWD 651911		Flexible Coupling Kit	537843S
	2010.01-2016.12		Front;Rear	Cabriolet RWD 651911		Flexible Coupling Kit	537832S
	2010.07-2016.12		Front	Estate 4WD 651924	Model code:212282	Propshaft	PS901588
	2010.07-2016.12	AT	Front	Estate 4WD 651924	Model code:212282	Propshaft	PS901589
	2010.07-2016.12		Centre	Estate 4WD 651924		Center Bearing Support	538668
	2010.07-2016.12		Front	Estate 4WD 651924		Flexible Coupling	537851
	2010.07-2016.12		Front;Rear	Estate 4WD 651924		Flexible Coupling	512678
	2010.07-2016.12		Front	Estate 4WD 651924		Flexible Coupling Kit	537851S
	2010.07-2016.12		Front;Rear	Estate 4WD 651924		Flexible Coupling Kit	512673S
	2011.01-2015.12		Front	Saloon 4WD 651924	Model code:212082	Propshaft	PS901588
	2011.01-2015.12	AT	Front	Saloon 4WD 651924	Model code:212082	Propshaft	PS901589
	2011.01-2015.12		Centre	Saloon 4WD 651924		Center Bearing Support	538668
	2011.01-2015.12		Front	Saloon 4WD 651924		Flexible Coupling	537851
	2011.01-2015.12		Front;Rear	Saloon 4WD 651924		Flexible Coupling	512678
	2011.01-2015.12		Front	Saloon 4WD 651924		Flexible Coupling Kit	537851S
	2011.01-2015.12		Front;Rear	Saloon 4WD 651924		Flexible Coupling Kit	512673S
2.5 (83 kw)	1993.06-1995.06		Centre	Saloon RWD 605911		Center Bearing Support	538997
	1993.06-1995.06		Centre	Estate RWD 605911		Center Bearing Support	538997
	1993.06-1995.06		Front	Saloon RWD 605911		Flexible Coupling	510436
	1993.06-1995.06		Front	Estate RWD 605911		Flexible Coupling	510436
	1993.06-1995.06		Front	Saloon RWD 605911		Flexible Coupling	510569
	1993.06-1995.06		Front	Estate RWD 605911		Flexible Coupling	510569
	1993.06-1995.06		Rear	Saloon RWD 605911		Flexible Coupling	510460
	1993.06-1995.06		Rear	Estate RWD 605911		Flexible Coupling	510460
	1993.06-1995.06		Front	Saloon RWD 605911		Flexible Coupling Kit	510434S
	1993.06-1995.06		Front	Estate RWD 605911		Flexible Coupling Kit	510434S
	1993.06-1995.06		Rear	Saloon RWD 605911		Flexible Coupling Kit	510459S
	1993.06-1995.06		Rear	Estate RWD 605911		Flexible Coupling Kit	510459S
	1993.06-1995.06		Front;Rear	Saloon RWD 605911		Flexible Coupling Kit	510570S
	1993.06-1995.06		Front;Rear	Estate RWD 605911		Flexible Coupling Kit	510570S
	1995.07-2000.06		Centre	Saloon RWD 605912		Center Bearing Support	539004
	1995.07-2000.06		Front	Saloon RWD 605912		Flexible Coupling	510569
	1995.07-2000.06		Front	Saloon RWD 605912	MT	Flexible Coupling Kit	537821S
	1995.07-2000.06		Front;Rear	Saloon RWD 605912		Flexible Coupling Kit	510570S
	1996.06-1998.07		Centre	Estate RWD 605912		Center Bearing Support	539004
	1996.06-1998.07		Front	Estate RWD 605912		Flexible Coupling	510569
	1996.06-1998.07		Front	Estate RWD 605912	MT	Flexible Coupling Kit	537821S
	1996.06-1998.07		Front;Rear	Estate RWD 605912		Flexible Coupling Kit	510570S
2.5 (93 kw)	1993.06-1995.06		Centre	Saloon RWD 602962	Inner diameter:25mm	Center Bearing Support	538997
	1993.06-1995.06		Centre	Saloon RWD 602962	Inner diameter:30mm	Center Bearing Support	538998
	1993.06-1995.06		Front	Saloon RWD 602962		Flexible Coupling	510436
	1993.06-1995.06		Front	Saloon RWD 602962		Flexible Coupling	510569
	1993.06-1995.06		Rear	Saloon RWD 602962		Flexible Coupling	510460
	1993.06-1995.06		Front	Saloon RWD 602962		Flexible Coupling Kit	510434S
	1993.06-1995.06		Rear	Saloon RWD 602962		Flexible Coupling Kit	510459S
	1993.06-1995.06		Front;Rear	Saloon RWD 602962		Flexible Coupling Kit	510570S
	1993.06-1996.01		Front	Estate RWD 602962	AT	Flexible Coupling	510436
	1993.06-1996.01		Front	Estate RWD 602962	MT	Flexible Coupling	510569
	1993.06-1996.01		Rear	Estate RWD 602962		Flexible Coupling	510460
	1993.06-1996.01		Front	Estate RWD 602962		Flexible Coupling Kit	510434S
	1993.06-1996.01		Rear	Estate RWD 602962		Flexible Coupling Kit	510459S
	1993.06-1996.01		Front;Rear	Estate RWD 602962		Flexible Coupling Kit	510570S
2.5 (110 kw)	1995.07-2000.06		Centre	Saloon RWD 605962		Center Bearing Support	538667
	1995.07-2000.06		Front	Saloon RWD 605962	538111 and 512678 different structure	Flexible Coupling	538111
	1995.07-2000.06		Front;Rear	Saloon RWD 605962	512678 and 538111 different structure	Flexible Coupling	512678
	1995.07-2000.06		Front	Saloon RWD 605962		Flexible Coupling Kit	537819S
	1995.07-2000.06		Front;Rear	Saloon RWD 605962		Flexible Coupling Kit	512673S

	YEAR	TRANSM.	FITTING POSITION	BODY STYLE & DRIVE TYPE & ENGINE	REMARKS	PRODUCT	GSP Ref.
MERCEDES-BENZ							
E250							
2.5 (110 kw)	1997.11-1999.09		Centre	Estate RWD 605962		Center Bearing Support	538667
	1997.11-1999.09		Front	Estate RWD 605962	538111 and 512678 different structure	Flexible Coupling	538111
	1997.11-1999.09		Front;Rear	Estate RWD 605962	512678 and 538111 different structure	Flexible Coupling	512678
	1997.11-1999.09		Front	Estate RWD 605962		Flexible Coupling Kit	537819S
	1997.11-1999.09		Front;Rear	Estate RWD 605962		Flexible Coupling Kit	512673S
2.5 (150 kw)	2007.05-2008.12		Centre	Saloon RWD 272922	Height:57.7mm	Center Bearing Support	538667
	2007.05-2008.12		Front;Rear	Saloon RWD 272922		Flexible Coupling	512678
	2007.05-2008.12		Front;Rear	Saloon RWD 272922		Flexible Coupling Kit	512673S
	2009.05-2011.12		Centre	Saloon RWD 272923		Center Bearing Support	538668
	2009.05-2011.12		Front;Rear	Saloon RWD 272923		Flexible Coupling	512678
	2009.05-2011.12		Front;Rear	Saloon RWD 272923		Flexible Coupling Kit	512673S
E270							
2.7 (120 kw)	1999.07-2002.03		Centre	Saloon RWD 612961		Center Bearing Support	538667
	1999.07-2002.03		Front	Saloon RWD 612961	AT	Flexible Coupling	512672
	1999.07-2002.03		Front;Rear	Saloon RWD 612961		Flexible Coupling	512677
	1999.07-2002.03		Rear	Saloon RWD 612961	512672S and 537889S different accessory	Flexible Coupling Kit	512672S
	1999.07-2002.03		Rear	Saloon RWD 612961	537889S and 512672S different accessory	Flexible Coupling Kit	537889S
	1999.07-2002.03		Front;Rear	Saloon RWD 612961		Flexible Coupling Kit	512677S
	2000.02-2003.03		Centre	Estate RWD 612961		Center Bearing Support	538667
	2000.02-2003.03		Front	Estate RWD 612961	AT	Flexible Coupling	512672
	2000.02-2003.03		Front;Rear	Estate RWD 612961		Flexible Coupling	512677
	2000.02-2003.03		Rear	Estate RWD 612961		Flexible Coupling Kit	512672S
	2000.02-2003.03		Front;Rear	Estate RWD 612961		Flexible Coupling Kit	512677S
	2002.03-2008.12	AT	Front	Saloon RWD 647961		Propshaft	PS900364
	2002.03-2008.12		Centre	Saloon RWD 647961		Center Bearing Support	538667
	2002.03-2008.12		Front;Rear	Saloon RWD 647961		Flexible Coupling Kit	537794S
	2003.03-2009.07	AT	Front	Estate RWD 647961		Propshaft	PS900364
	2003.03-2009.07		Centre	Estate RWD 647961		Center Bearing Support	538667
	2003.03-2009.07		Centre	Chassis Cabin RWD 647961	Height:57.7mm	Center Bearing Support	538667
	2003.03-2009.07		Front;Rear	Estate RWD 647961		Flexible Coupling Kit	537794S
	2003.03-2009.07		Front;Rear	Chassis Cabin RWD 647961		Flexible Coupling Kit	537794S
2.7 (125 kw)	1999.07-2002.03		Centre	Saloon RWD 612961		Center Bearing Support	538667
	1999.07-2002.03		Front	Saloon RWD 612961	AT	Flexible Coupling	512672
	1999.07-2002.03		Front;Rear	Saloon RWD 612961		Flexible Coupling	512677
	1999.07-2002.03		Rear	Saloon RWD 612961	512672S and 537889S different accessory	Flexible Coupling Kit	512672S
	1999.07-2002.03		Rear	Saloon RWD 612961	537889S and 512672S different accessory	Flexible Coupling Kit	537889S
	1999.07-2002.03		Front;Rear	Saloon RWD 612961	5AT;6MT	Flexible Coupling Kit	512677S
	1999.07-2002.12		Front;Rear	Platform/Chassis RWD OM 612.961		Flexible Coupling	512677
	1999.07-2002.12		Front;Rear	Platform/Chassis RWD OM 612.961		Flexible Coupling Kit	512677S
	1999.07-2003.03		Centre	Estate RWD 612961		Center Bearing Support	538667
	1999.07-2003.03		Front	Estate RWD 612961	AT	Flexible Coupling	512672
	1999.07-2003.03		Front;Rear	Estate RWD 612961		Flexible Coupling	512677
	1999.07-2003.03		Rear	Estate RWD 612961	512672S and 537889S different accessory	Flexible Coupling Kit	512672S
	1999.07-2003.03		Rear	Estate RWD 612961	537889S and 512672S different accessory	Flexible Coupling Kit	537889S
	1999.07-2003.03		Front;Rear	Estate RWD 612961	5AT;6MT	Flexible Coupling Kit	512677S
2.7 (130 kw)	2002.04-2005.07	AT	Front	Saloon RWD 647961		Propshaft	PS900364
	2002.04-2005.07		Centre	Saloon RWD 647961		Center Bearing Support	538667
	2002.04-2005.07		Rear	Saloon RWD 647961		Flexible Coupling Kit	537793S
	2002.04-2005.07		Front;Rear	Saloon RWD 647961		Flexible Coupling Kit	537794S
	2003.04-2005.07	AT	Front	Estate RWD 647961		Propshaft	PS900364
	2003.04-2005.07		Centre	Estate RWD 647961		Center Bearing Support	538667
	2003.04-2005.07		Rear	Estate RWD 647961		Flexible Coupling Kit	537793S
	2003.04-2005.07		Front;Rear	Estate RWD 647961		Flexible Coupling Kit	537794S
	2003.10-2005.07		Centre	Chassis Cabin RWD 647961	Height:57.7mm	Center Bearing Support	538667
	2003.10-2005.07		Front;Rear	Chassis Cabin RWD 647961		Flexible Coupling Kit	537794S
E280							
2.8 (142 kw)	1993.06-1995.06		Centre	Saloon RWD 104942		Center Bearing Support	538997
	1993.06-1995.06		Front	Saloon RWD 104942		Flexible Coupling	510571
	1993.06-1995.06		Front;Rear	Saloon RWD 104942		Flexible Coupling	510579
	1993.06-1995.06		Front	Saloon RWD 104942		Flexible Coupling Kit	510580S
	1993.06-1996.01		Centre	Estate RWD 104942		Center Bearing Support	538998
	1993.06-1996.01		Front	Estate RWD 104942		Flexible Coupling	510571
	1993.06-1996.01		Front;Rear	Estate RWD 104942		Flexible Coupling	510579
	1993.06-1996.01		Front	Estate RWD 104942	MT	Flexible Coupling Kit	510571S

	YEAR	TRANSM.	FITTING POSITION	BODY STYLE & DRIVE TYPE & ENGINE	REMARKS	PRODUCT	GSP Ref.
MERCEDES-BENZ **E280**							
2.8 (142 kw)	1993.06-1996.01		Front	Estate RWD 104942	AT	Flexible Coupling Kit	510580S
	1995.07-1997.10		Centre	Saloon RWD 104945		Center Bearing Support	538667
	1995.07-1997.10		Front	Saloon RWD 104945		Flexible Coupling	510571
	1995.07-1997.10		Front;Rear	Saloon RWD 104945		Flexible Coupling	510579
	1995.07-1997.10		Front	Saloon RWD 104945		Flexible Coupling Kit	510571S
	1995.07-1997.10		Front	Saloon RWD 104945		Flexible Coupling Kit	510580S
2.8 (145 kw)	1993.06-1995.06		Centre	Saloon RWD 104942	Inner diameter:25mm	Center Bearing Support	538997
	1993.06-1995.06		Centre	Saloon RWD 104942	Inner diameter:30mm	Center Bearing Support	538998
	1993.06-1995.06		Front	Saloon RWD 104942		Flexible Coupling	510571
	1993.06-1995.06		Front;Rear	Saloon RWD 104942		Flexible Coupling	510579
	1993.06-1995.06		Front	Saloon RWD 104942	MT	Flexible Coupling Kit	510571S
	1993.06-1995.06		Front	Saloon RWD 104942	AT	Flexible Coupling Kit	510580S
	1993.06-1996.06		Centre	Estate RWD 104942		Center Bearing Support	538998
	1993.06-1996.06		Front	Estate RWD 104942		Flexible Coupling	510571
	1993.06-1996.06		Front;Rear	Estate RWD 104942		Flexible Coupling	510579
	1993.06-1996.06		Front	Estate RWD 104942	MT	Flexible Coupling Kit	510571S
	1993.06-1996.06		Front	Estate RWD 104942	AT	Flexible Coupling Kit	510580S
2.8 (150 kw)	1997.04-2002.03		Centre	Saloon RWD 112921	Height:57.7mm	Center Bearing Support	538667
	1997.04-2002.03		Front	Saloon RWD 112921	MT;For OE No.124 411 05 15	Flexible Coupling	510571
	1997.04-2002.03		Front	Saloon RWD 112921	538111 and 510579 different structure	Flexible Coupling	538111
	1997.04-2002.03		Front;Rear	Saloon RWD 112921		Flexible Coupling	510579
	1997.04-2002.03		Front;Rear	Saloon RWD 112921		Flexible Coupling	512678
	1997.04-2002.03		Front	Saloon RWD 112921	MT,510571S and 537850S different accessory	Flexible Coupling Kit	510571S
	1997.04-2002.03		Front	Saloon RWD 112921	AT	Flexible Coupling Kit	510580S
	1997.04-2002.03		Front	Saloon RWD 112921	MT,537850S and 510571S different accessory	Flexible Coupling Kit	537850S
	1997.04-2002.03		Front;Rear	Saloon RWD 112921		Flexible Coupling Kit	512673S
	1997.11-2002.03	AT	Rear	Saloon 4WD 112921		Propshaft	PS900349
	1997.11-2002.03		Centre	Saloon 4WD 112921		Center Bearing Support	539004
	1997.11-2002.03		Front	Saloon 4WD 112921		Flexible Coupling	510569
	1997.11-2002.03		Front;Rear	Saloon 4WD 112921		Flexible Coupling	510579
	1997.11-2002.03		Front;Rear	Saloon 4WD 112921		Flexible Coupling	512678
	1997.11-2002.03		Front	Saloon 4WD 112921		Flexible Coupling Kit	510570S
	1997.11-2002.03		Front	Saloon 4WD 112921		Flexible Coupling Kit	510580S
	1997.11-2002.03		Front;Rear	Saloon 4WD 112921		Flexible Coupling Kit	512673S
	1997.11-2003.05	AT	Rear	Estate 4WD 112921		Propshaft	PS900349
	1997.11-2003.05		Centre	Estate RWD 112921	Height:57.7mm	Center Bearing Support	538667
	1997.11-2003.05		Centre	Estate 4WD 112921		Center Bearing Support	539004
	1997.11-2003.05		Front	Estate 4WD 112921		Flexible Coupling	510569
	1997.11-2003.05		Front;Rear	Estate 4WD 112921		Flexible Coupling	510579
	1997.11-2003.05		Front;Rear	Estate 4WD 112921		Flexible Coupling	512678
	1997.11-2003.05		Front;Rear	Estate RWD 112921		Flexible Coupling	512678
	1997.11-2003.05		Front	Estate 4WD 112921	Inner diameter:39mm	Flexible Coupling Kit	510570S
	1997.11-2003.05		Front	Estate 4WD 112921	Inner diameter:46.5mm	Flexible Coupling Kit	510580S
	1997.11-2003.05		Front	Estate RWD 112921		Flexible Coupling Kit	510580S
	1997.11-2003.05		Front;Rear	Estate 4WD 112921		Flexible Coupling Kit	512673S
	1997.11-2003.05		Front;Rear	Estate RWD 112921		Flexible Coupling Kit	512673S
	1999.07-2002.11		Centre	Platform/Chassis RWD M 112.921		Center Bearing Support	538667
	1999.07-2002.11		Front;Rear	Platform/Chassis RWD M 112.921		Flexible Coupling	510579
	1999.07-2002.11		Front;Rear	Platform/Chassis RWD M 112.921		Flexible Coupling	512677
	1999.07-2002.11		Front	Platform/Chassis RWD M 112.921		Flexible Coupling Kit	510580S
	1999.07-2002.11		Front;Rear	Platform/Chassis RWD M 112.921	Inner diameter:50mm	Flexible Coupling Kit	512673S
	1999.07-2002.11		Front;Rear	Platform/Chassis RWD M 112.921	Inner diameter:57.5mm	Flexible Coupling Kit	512677S
3.0 (140 kw)	2005.03-2008.12	5AT	Front	Saloon 4WD 642921		Propshaft	PS900350
	2005.03-2008.12		Centre	Saloon 4WD 642921		Center Bearing Support	538667
	2005.03-2008.12		Rear	Saloon 4WD 642921	7AT	Flexible Coupling	537843
	2005.03-2008.12		Front;Rear	Saloon 4WD 642921	5AT	Flexible Coupling	512678
	2005.03-2008.12		Front;Rear	Saloon 4WD 642921	AT	Flexible Coupling	533884
	2005.03-2008.12		Front;Rear	Saloon 4WD 642921		Flexible Coupling Kit	512673S
	2005.03-2008.12		Front;Rear	Saloon 4WD 642921		Flexible Coupling Kit	537794S
	2005.03-2008.12		Front;Rear	Saloon 4WD 642921	AT	Flexible Coupling Kit	537832S
	2005.03-2009.07	5AT	Front	Estate 4WD 642921		Propshaft	PS900350
	2005.03-2009.07		Centre	Estate 4WD 642921		Center Bearing Support	538667
	2005.03-2009.07		Centre	Estate RWD 642920		Center Bearing Support	538667
	2005.03-2009.07		Rear	Estate 4WD 642921	7AT	Flexible Coupling	537843

	YEAR	TRANSM.	FITTING POSITION	BODY STYLE & DRIVE TYPE & ENGINE	REMARKS	PRODUCT	GSP Ref.
MERCEDES-BENZ							
E280							
3.0 (140 kw)	2005.03-2009.07		Rear	Estate RWD 642920	7AT	Flexible Coupling	537843
	2005.03-2009.07		Front;Rear	Estate 4WD 642921	5AT	Flexible Coupling	512678
	2005.03-2009.07		Front;Rear	Estate 4WD 642921	AT	Flexible Coupling	533884
	2005.03-2009.07		Front;Rear	Estate RWD 642920		Flexible Coupling	533884
	2005.03-2009.07		Rear	Estate RWD 642920		Flexible Coupling Kit	533884S
	2005.03-2009.07		Front;Rear	Estate 4WD 642921		Flexible Coupling Kit	512673S
	2005.03-2009.07		Front;Rear	Estate RWD 642920		Flexible Coupling Kit	537794S
	2005.03-2009.07		Front;Rear	Estate 4WD 642921	AT	Flexible Coupling Kit	537832S
	2005.03-2009.07		Front;Rear	Estate RWD 642920		Flexible Coupling Kit	537832S
	2005.03-2011.12		Centre	Saloon RWD 642920		Center Bearing Support	538667
	2005.03-2011.12		Rear	Saloon RWD 642920	7AT	Flexible Coupling	537843
	2005.03-2011.12		Front;Rear	Saloon RWD 642920		Flexible Coupling	533884
	2005.03-2011.12		Rear	Saloon RWD 642920		Flexible Coupling Kit	533884S
	2005.03-2011.12		Front;Rear	Saloon RWD 642920		Flexible Coupling Kit	537794S
	2005.03-2011.12		Front;Rear	Saloon RWD 642920		Flexible Coupling Kit	537832S
	2005.08-2009.07		Centre	Chassis Cabin RWD 642920		Center Bearing Support	538667
	2005.08-2009.07		Front;Rear	Chassis Cabin RWD 642920		Flexible Coupling	533884
	2005.08-2009.07		Front;Rear	Chassis Cabin RWD 642920		Flexible Coupling Kit	537832S
3.0 (170 kw)	2005.03-2008.12		Centre	Saloon RWD 272943	Height:57.7mm	Center Bearing Support	538667
	2005.03-2008.12		Front;Rear	Saloon RWD 272943		Flexible Coupling	512678
	2005.03-2008.12		Front;Rear	Saloon RWD 272943		Flexible Coupling Kit	512673S
	2005.03-2009.07	5AT	Front	Estate 4WD 272944		Propshaft	PS900351
	2005.03-2009.07		Centre	Estate 4WD 272944	Height:57.7mm	Center Bearing Support	538667
	2005.03-2009.07		Centre	Estate RWD 272943	Height:57.7mm	Center Bearing Support	538667
	2005.03-2009.07		Front;Rear	Estate 4WD 272944		Flexible Coupling	512678
	2005.03-2009.07		Front;Rear	Estate RWD 272943		Flexible Coupling	512678
	2005.03-2009.07		Front;Rear	Estate 4WD 272944		Flexible Coupling Kit	512673S
	2005.03-2009.07		Front;Rear	Estate RWD 272943		Flexible Coupling Kit	512673S
	2005.06-2008.12	5AT	Front	Saloon 4WD 272944		Propshaft	PS900351
	2005.06-2008.12		Centre	Saloon 4WD 272944	Height:57.7mm	Center Bearing Support	538667
	2005.06-2008.12		Front;Rear	Saloon 4WD 272944		Flexible Coupling	512678
	2005.06-2008.12		Front;Rear	Saloon 4WD 272944		Flexible Coupling Kit	512673S
3.2 (130 kw)	2003.08-2005.07	AT	Front	Saloon RWD 648961		Propshaft	PS900364
	2003.08-2005.07		Centre	Saloon RWD 648961		Center Bearing Support	538667
	2003.08-2005.07		Front;Rear	Saloon RWD 648961		Flexible Coupling	533884
	2003.08-2005.07		Front	Saloon RWD 648961		Flexible Coupling Kit	537794S
	2003.08-2005.07		Front;Rear	Saloon RWD 648961		Flexible Coupling Kit	537832S
	2003.10-2005.07	AT	Front	Estate RWD 648961		Propshaft	PS900364
	2003.10-2005.07		Centre	Estate RWD 648961		Center Bearing Support	538667
	2003.10-2005.07		Front;Rear	Estate RWD 648961		Flexible Coupling	533884
	2003.10-2005.07		Front	Estate RWD 648961		Flexible Coupling Kit	537794S
	2003.10-2005.07		Front;Rear	Estate RWD 648961		Flexible Coupling Kit	537832S
E290							
2.9 (95 kw)	1995.07-1999.08		Centre	Saloon RWD 602982		Center Bearing Support	538667
	1995.07-1999.08		Front;Rear	Saloon RWD 602982		Flexible Coupling	510579
	1995.07-1999.08		Front	Saloon RWD 602982		Flexible Coupling Kit	510580S
	1995.07-1999.08		Front	Saloon RWD 602982		Flexible Coupling Kit	537796S
	1996.06-1999.08		Centre	Estate RWD 602982		Center Bearing Support	538667
	1996.06-1999.08		Front;Rear	Estate RWD 602982		Flexible Coupling	510579
	1996.06-1999.08		Front	Estate RWD 602982		Flexible Coupling Kit	510580S
	1996.06-1999.08		Front	Estate RWD 602982		Flexible Coupling Kit	537796S
	1996.07-1999.07		Front;Rear	Platform/Chassis RWD OM 602.982		Flexible Coupling	510579
	1996.07-1999.07		Front	Platform/Chassis RWD OM 602.982		Flexible Coupling Kit	510580S
E300							
2.0 (180 kw)	2016.07-2020.06		Centre	Saloon RWD 274920		Center Bearing Support	538622
	2016.07-2020.06		Front;Rear	Saloon RWD 274920		Flexible Coupling	537630
	2016.07-2020.06		Front;Rear	Saloon RWD 274920		Flexible Coupling Kit	537630S
	2016.09-2020.06	AT	Front	Saloon 4WD M 274.920	Model year from:2017,Model year to:2019	Propshaft	PS900548
	2016.12-		Front	Coupe RWD 274920		Flexible Coupling	537630
	2016.12-		Front;Rear	Coupe RWD 274920		Flexible Coupling Kit	537630S
	2017.06-		Front	Cabriolet RWD 274920		Flexible Coupling	537630
	2017.06-		Front;Rear	Cabriolet RWD 274920		Flexible Coupling Kit	537630S
	2017.12-2020.06		Front	Saloon RWD 654920		Flexible Coupling	537630
	2017.12-2020.06		Front;Rear	Estate RWD 654920		Flexible Coupling	537851

	YEAR	TRANSM.	FITTING POSITION	BODY STYLE & DRIVE TYPE & ENGINE	REMARKS	PRODUCT	GSP Ref.
MERCEDES-BENZ **E300**							
2.0 (180 kw)	2017.12-2020.06		Front;Rear	Saloon RWD 654920		Flexible Coupling	537851
	2017.12-2020.06		Front;Rear	Saloon RWD 654920		Flexible Coupling Kit	537630S
	2018.05-		Front;Rear	Cabriolet RWD 654920	9AT	Flexible Coupling	537851
	2018.05-		Front;Rear	Coupe RWD 654920	9AT	Flexible Coupling	537851
2.0 (190 kw)	2018.08-		Front;Rear	Coupe RWD 264920		Flexible Coupling Kit	537630S
	2019.02-2023.10		Centre	Saloon RWD 264920/274920		Center Bearing Support	538622
	2019.02-2023.10		Front;Rear	Saloon RWD 264920/274920		Flexible Coupling Kit	537630S
	2019.03-		Front;Rear	Cabriolet RWD 264920		Flexible Coupling Kit	537630S
	2019.06-		Front;Rear	Coupe RWD 264920		Flexible Coupling Kit	537630S
	2019.06-		Front;Rear	Cabriolet RWD 264920		Flexible Coupling Kit	537630S
	2019.06-2023.10		Centre	Estate RWD 264920		Center Bearing Support	538622
	2019.06-2023.10		Centre	Saloon RWD 264920		Center Bearing Support	538622
	2019.06-2023.10		Front;Rear	Estate RWD 264920		Flexible Coupling Kit	537630S
	2019.06-2023.10		Front;Rear	Saloon RWD 264920		Flexible Coupling Kit	537630S
2.0 (195 kw)	2021.01-		Front;Rear	Cabriolet 4WD 654820	9AT	Flexible Coupling	537851
	2021.01-		Front;Rear	Coupe 4WD 654820	9AT	Flexible Coupling	537851
	2021.01-		Front;Rear	Cabriolet 4WD 654820		Flexible Coupling Kit	537627S
	2021.01-2023.10		Centre	Saloon 4WD 654820		Center Bearing Support	538622
	2021.01-2023.10		Front;Rear	Saloon 4WD 654820		Flexible Coupling Kit	537630S
	2021.01-2023.10		Front;Rear	Estate 4WD 654820		Flexible Coupling Kit	537630S
2.0 (225 kw)	2018.10-2023.10		Front;Rear	Saloon RWD 654920		Flexible Coupling	538506
	2018.10-2023.10		Front;Rear	Estate RWD 654920		Flexible Coupling	538506
	2020.06-2023.08		Centre	Saloon 4WD 654920		Center Bearing Support	538622
	2020.06-2023.08		Front;Rear	Saloon 4WD 654920		Flexible Coupling	537627
	2020.06-2023.08		Front;Rear	Saloon 4WD 654920		Flexible Coupling Kit	537627S
	2020.08-2023.08		Centre	Estate 4WD 654920		Center Bearing Support	538622
	2020.08-2023.08		Front;Rear	Estate 4WD 654920		Flexible Coupling	538506
2.0 (230 kw)	2023.10-		Front;Rear	Saloon 4WD 654820		Flexible Coupling	537627
	2023.10-		Front;Rear	Estate 4WD 654820		Flexible Coupling	537627
2.0 (235 kw)	2018.11-2023.10		Centre	Saloon RWD 274920		Center Bearing Support	538622
	2018.11-2023.10		Front;Rear	Saloon RWD 274920		Flexible Coupling	538506
	2020.06-2023.08		Centre	Estate RWD 274920		Center Bearing Support	538622
	2020.06-2023.08		Front;Rear	Estate RWD 274920		Flexible Coupling	538506
2.2 (150 kw)	2012.04-2016.12		Centre	Estate RWD 651924		Center Bearing Support	538668
	2012.04-2016.12		Centre	Saloon RWD 651924		Center Bearing Support	538668
3.0 (100 kw)	1993.06-1995.06		Centre	Saloon RWD 606910	Inner diameter:25mm	Center Bearing Support	538997
	1993.06-1995.06		Centre	Saloon RWD 606910	Inner diameter:30mm	Center Bearing Support	538998
	1993.06-1995.06		Front	Saloon RWD 606910		Flexible Coupling	510436
	1993.06-1995.06		Front	Saloon RWD 606910		Flexible Coupling	510569
	1993.06-1995.06		Rear	Saloon RWD 606910		Flexible Coupling	510460
	1993.06-1995.06		Front	Saloon RWD 606910		Flexible Coupling Kit	510434S
	1993.06-1995.06		Rear	Saloon RWD 606910		Flexible Coupling Kit	510459S
	1993.06-1995.06		Front;Rear	Saloon RWD 606910		Flexible Coupling Kit	510570S
	1993.06-1996.06		Centre	Estate RWD 606910		Center Bearing Support	538998
	1993.06-1996.06		Front	Estate RWD 606910		Flexible Coupling	510436
	1993.06-1996.06		Front	Estate RWD 606910		Flexible Coupling	510569
	1993.06-1996.06		Rear	Estate RWD 606910		Flexible Coupling	510460
	1993.06-1996.06		Front	Estate RWD 606910		Flexible Coupling Kit	510434S
	1993.06-1996.06		Rear	Estate RWD 606910		Flexible Coupling Kit	510459S
	1993.06-1996.06		Front;Rear	Estate RWD 606910		Flexible Coupling Kit	510570S
	1995.07-1997.10		Centre	Saloon RWD 606912		Center Bearing Support	538667
	1995.07-1997.10		Front	Saloon RWD 606912		Flexible Coupling	510569
	1995.07-1997.10		Front;Rear	Saloon RWD 606912		Flexible Coupling Kit	510570S
3.0 (108 kw)	1993.06-1995.06		Centre	Saloon 4WD 603960	Inner diameter:25mm	Center Bearing Support	538997
	1993.06-1995.06		Centre	Saloon RWD 603960	Inner diameter:25mm	Center Bearing Support	538997
	1993.06-1995.06		Centre	Saloon 4WD 603960	Inner diameter:30mm	Center Bearing Support	538998
	1993.06-1995.06		Centre	Saloon RWD 603960	Inner diameter:30mm	Center Bearing Support	538998
	1993.06-1995.06		Rear	Saloon 4WD 603960		Flexible Coupling	510460
	1993.06-1995.06		Rear	Saloon 4WD 603960		Flexible Coupling	510575
	1993.06-1995.06		Rear	Saloon RWD 603960		Flexible Coupling	510575
	1993.06-1995.06		Front	Saloon RWD 603960		Flexible Coupling Kit	510434S
	1993.06-1995.06		Rear	Saloon 4WD 603960		Flexible Coupling Kit	510459S
	1993.06-1995.06		Rear	Saloon 4WD 603960		Flexible Coupling Kit	510576S
	1993.06-1995.06		Rear	Saloon RWD 603960		Flexible Coupling Kit	510576S

	YEAR	TRANSM.	FITTING POSITION	BODY STYLE & DRIVE TYPE & ENGINE	REMARKS	PRODUCT	GSP Ref.
MERCEDES-BENZ **E300**							
3.0 (108 kw)	1993.06-1996.01		Centre	Estate 4WD 603963		Center Bearing Support	538998
	1993.06-1996.01		Centre	Estate RWD 603960		Center Bearing Support	538998
	1993.06-1996.01		Rear	Estate 4WD 603963		Flexible Coupling	510460
	1993.06-1996.01		Rear	Estate 4WD 603963		Flexible Coupling	510575
	1993.06-1996.01		Rear	Estate RWD 603960		Flexible Coupling	510575
	1993.06-1996.01		Rear	Estate 4WD 603963		Flexible Coupling Kit	510459S
	1993.06-1996.01		Rear	Estate 4WD 603963		Flexible Coupling Kit	510576S
	1993.06-1996.01		Rear	Estate RWD 603960		Flexible Coupling Kit	510576S
3.0 (130 kw)	1996.10-1999.08		Centre	Saloon RWD 606962		Center Bearing Support	538667
	1996.10-1999.08		Front;Rear	Saloon RWD 606962		Flexible Coupling	512677
	1996.10-1999.08		Front;Rear	Saloon RWD 606962		Flexible Coupling Kit	512677S
	1997.11-1999.09		Centre	Estate RWD 606962		Center Bearing Support	538667
	1997.11-1999.09		Front;Rear	Estate RWD 606962		Flexible Coupling	512677
	1997.11-1999.09		Front;Rear	Estate RWD 606962		Flexible Coupling Kit	512677S
3.0 (132 kw)	1993.06-1996.01		Centre	Estate 4WD 103985		Center Bearing Support	538998
	1993.06-1996.01		Front	Estate 4WD 103985	Chassis no. to:B 065853	Flexible Coupling	510436
	1993.06-1996.01		Front	Estate 4WD 103985	Chassis no. from:F 122359	Flexible Coupling	510569
	1993.06-1996.01		Rear	Estate 4WD 103985		Flexible Coupling	510460
	1993.06-1996.01		Front	Estate 4WD 103985	Inner diameter:37mm	Flexible Coupling Kit	510434S
	1993.06-1996.01		Rear	Estate 4WD 103985		Flexible Coupling Kit	510459S
	1993.06-1996.01		Front;Rear	Estate 4WD 103985	Inner diameter:39mm	Flexible Coupling Kit	510570S
3.0 (150 kw)	2009.12-2010.12		Centre	Saloon RWD 642850		Center Bearing Support	538668
	2009.12-2010.12		Centre	Estate RWD 642850		Center Bearing Support	538668
	2009.12-2010.12		Rear	Saloon RWD 642850		Flexible Coupling	537843
	2009.12-2010.12		Front;Rear	Saloon RWD 642850		Flexible Coupling	533884
	2009.12-2010.12		Rear	Saloon RWD 642850		Flexible Coupling Kit	533884S
	2009.12-2010.12		Rear	Estate RWD 642850		Flexible Coupling Kit	533884S
	2009.12-2010.12		Front;Rear	Saloon RWD 642850		Flexible Coupling Kit	537832S
3.0 (155 kw)	2007.09-2008.12		Centre	Saloon RWD 642920		Center Bearing Support	538667
	2007.09-2008.12		Front;Rear	Saloon RWD 642920		Flexible Coupling	533884
	2007.09-2008.12		Front;Rear	Saloon RWD 642920		Flexible Coupling Kit	537832S
3.0 (161 kw)	2011.01-2015.12		Front;Rear	Saloon RWD M 272.952		Flexible Coupling Kit	512673S
3.0 (170 kw)	2009.01-2013.12		Centre	Saloon RWD 272952		Center Bearing Support	538668
	2009.01-2013.12		Front;Rear	Saloon RWD 272952		Flexible Coupling	512678
	2009.01-2013.12		Front;Rear	Saloon RWD 272952		Flexible Coupling Kit	512673S
	2009.11-2011.12		Centre	Estate RWD 272952		Center Bearing Support	538668
	2009.11-2011.12		Front;Rear	Estate RWD 272952		Flexible Coupling	512678
	2009.11-2011.12		Front;Rear	Estate RWD 272952		Flexible Coupling Kit	512673S
	2010.03-2015.12		Centre	Saloon RWD 642850/642852		Center Bearing Support	538668
	2010.03-2015.12		Front	Saloon RWD 642850/642852		Flexible Coupling	537851
	2010.03-2015.12		Rear	Saloon RWD 642850/642852		Flexible Coupling	537843
	2010.03-2015.12		Front;Rear	Saloon RWD 642850/642852		Flexible Coupling	533884
	2010.03-2015.12		Front	Saloon RWD 642850/642852		Flexible Coupling Kit	537851S
	2010.03-2015.12		Rear	Saloon RWD 642850/642852		Flexible Coupling Kit	533884S
	2010.03-2015.12		Front;Rear	Saloon RWD 642850/642852		Flexible Coupling Kit	537832S
	2010.03-2016.12		Centre	Estate RWD 642850/642852		Center Bearing Support	538668
	2010.03-2016.12		Front	Estate RWD 642850/642852		Flexible Coupling	537851
	2010.03-2016.12		Rear	Estate RWD 642850/642852		Flexible Coupling	537843
	2010.03-2016.12		Front;Rear	Estate RWD 642850/642852		Flexible Coupling	533884
	2010.03-2016.12		Rear	Estate RWD 642850/642852		Flexible Coupling Kit	533884S
	2010.03-2016.12		Front;Rear	Estate RWD 642850/642852		Flexible Coupling Kit	537832S
3.5 (185 kw)	2011.04-2016.06		Centre	Coupe RWD 276957		Center Bearing Support	538668
	2011.04-2016.06		Front	Coupe RWD 276957		Flexible Coupling	512672
	2011.04-2016.06		Front;Rear	Coupe RWD 276957	7AT	Flexible Coupling	512677
	2011.04-2016.06		Front	Coupe RWD 276957	537889S and 537794S different structure	Flexible Coupling Kit	537889S
	2011.04-2016.06		Rear	Coupe RWD 276957		Flexible Coupling Kit	537793S
	2011.04-2016.06		Rear	Coupe RWD 276957	537794S and 537889S different structure	Flexible Coupling Kit	537794S
	2011.04-2016.06		Front;Rear	Coupe RWD 276957		Flexible Coupling Kit	512677S
	2011.04-2016.12		Centre	Cabriolet RWD 276957		Center Bearing Support	538668
	2011.04-2016.12		Front	Cabriolet RWD 276957		Flexible Coupling	512672
	2011.04-2016.12		Front;Rear	Cabriolet RWD 276957	7AT	Flexible Coupling	512677
	2011.04-2016.12		Front	Cabriolet RWD 276957	537889S and 537794S different structure	Flexible Coupling Kit	537889S
	2011.04-2016.12		Rear	Cabriolet RWD 276957		Flexible Coupling Kit	537793S
	2011.04-2016.12		Rear	Cabriolet RWD 276957	537794S and 537889S different structure	Flexible Coupling Kit	537794S

	YEAR	TRANSM.	FITTING POSITION	BODY STYLE & DRIVE TYPE & ENGINE	REMARKS	PRODUCT	GSP Ref.
MERCEDES-BENZ							
E300							
3.5 (185 kw)	2011.04-2016.12		Front;Rear	Cabriolet RWD 276957		Flexible Coupling Kit	512677S
	2011.07-2015.12		Centre	Saloon 4WD 276952		Center Bearing Support	538668
	2011.07-2015.12		Centre	Saloon RWD 276952		Center Bearing Support	538668
	2011.07-2015.12		Front	Saloon RWD 276952	7AT	Flexible Coupling	512672
	2011.07-2015.12		Front;Rear	Saloon RWD 276952	7AT	Flexible Coupling	512677
	2011.07-2015.12		Front	Saloon RWD 276952	537889S and 537794S different structure	Flexible Coupling Kit	537889S
	2011.07-2015.12		Rear	Saloon RWD 276952	537794S and 537889S different structure	Flexible Coupling Kit	537794S
	2011.07-2015.12		Front;Rear	Saloon RWD 276952		Flexible Coupling Kit	512677S
	2011.07-2016.12		Centre	Estate 4WD 276952		Center Bearing Support	538668
	2011.07-2016.12		Centre	Estate RWD 276952		Center Bearing Support	538668
	2011.07-2016.12		Front	Estate RWD 276952	7AT	Flexible Coupling	512672
	2011.07-2016.12		Front;Rear	Estate RWD 276952	7AT	Flexible Coupling	512677
	2011.07-2016.12		Front;Rear	Estate 4WD 276952		Flexible Coupling	512678
	2011.07-2016.12		Rear	Estate RWD 276952	7AT	Flexible Coupling Kit	537794S
	2011.07-2016.12		Rear	Estate RWD 276952	7AT	Flexible Coupling Kit	537889S
	2011.07-2016.12		Front;Rear	Estate 4WD 276952		Flexible Coupling Kit	512673S
	2011.07-2016.12		Front;Rear	Estate RWD 276952		Flexible Coupling Kit	512677S
E320							
3.0 (155 kw)	2007.11-2009.07		Centre	Estate RWD 642920		Center Bearing Support	538667
	2007.11-2009.07		Front;Rear	Estate RWD 642920		Flexible Coupling	533884
3.0 (165 kw)	2005.03-2008.12	5AT	Front	Saloon 4WD 642921		Propshaft	PS900350
	2005.03-2008.12		Centre	Saloon 4WD 642921		Center Bearing Support	538667
	2005.03-2008.12		Centre	Saloon RWD 642920		Center Bearing Support	538667
	2005.03-2008.12		Rear	Saloon 4WD 642921	7AT	Flexible Coupling	537843
	2005.03-2008.12		Rear	Saloon RWD 642920	7AT	Flexible Coupling	537843
	2005.03-2008.12		Front;Rear	Saloon 4WD 642921	5AT	Flexible Coupling	512678
	2005.03-2008.12		Front;Rear	Saloon 4WD 642921	AT	Flexible Coupling	533884
	2005.03-2008.12		Front;Rear	Saloon RWD 642920		Flexible Coupling	533884
	2005.03-2008.12		Front	Saloon 4WD 642921		Flexible Coupling Kit	537794S
	2005.03-2008.12		Front;Rear	Saloon 4WD 642921		Flexible Coupling Kit	512673S
	2005.03-2008.12		Front;Rear	Saloon RWD 642920		Flexible Coupling Kit	537794S
	2005.03-2008.12		Front;Rear	Saloon 4WD 642921	AT	Flexible Coupling Kit	537832S
	2005.03-2008.12		Front;Rear	Saloon RWD 642920		Flexible Coupling Kit	537832S
	2005.03-2009.07	5AT	Front	Estate 4WD 642921		Propshaft	PS900350
	2005.03-2009.07		Centre	Estate 4WD 642921		Center Bearing Support	538667
	2005.03-2009.07		Centre	Estate RWD 642920		Center Bearing Support	538667
	2005.03-2009.07		Rear	Estate 4WD 642921	7AT	Flexible Coupling	537843
	2005.03-2009.07		Rear	Estate RWD 642920	7AT	Flexible Coupling	537843
	2005.03-2009.07		Front;Rear	Estate 4WD 642921	5AT	Flexible Coupling	512678
	2005.03-2009.07		Front;Rear	Estate 4WD 642921	AT	Flexible Coupling	533884
	2005.03-2009.07		Front;Rear	Estate RWD 642920		Flexible Coupling	533884
	2005.03-2009.07		Front;Rear	Estate 4WD 642921		Flexible Coupling Kit	512673S
	2005.03-2009.07		Front;Rear	Estate 4WD 642921		Flexible Coupling Kit	537794S
	2005.03-2009.07		Front;Rear	Estate 4WD 642921	AT	Flexible Coupling Kit	537832S
	2005.03-2009.07		Front;Rear	Estate RWD 642920		Flexible Coupling Kit	537832S
3.0 (200 kw)	2014.07-2016.12		Centre	Cabriolet RWD 276820		Center Bearing Support	538668
	2014.07-2016.12		Centre	Coupe RWD 276820		Center Bearing Support	538668
	2014.07-2016.12		Front	Cabriolet RWD 276820	7AT	Flexible Coupling	512672
	2014.07-2016.12		Front	Coupe RWD 276820	7AT	Flexible Coupling	512672
	2014.07-2016.12		Front	Cabriolet RWD 276820		Flexible Coupling Kit	537889S
	2014.07-2016.12		Front	Coupe RWD 276820		Flexible Coupling Kit	537889S
	2014.07-2016.12		Rear	Cabriolet RWD 276820		Flexible Coupling Kit	537793S
	2014.07-2016.12		Rear	Coupe RWD 276820		Flexible Coupling Kit	537793S
3.2 (145 kw)	1999.07-2002.03		Centre	Saloon RWD 613961		Center Bearing Support	538667
	1999.07-2002.03		Front	Saloon RWD 613961		Flexible Coupling	512672
	1999.07-2002.03		Front;Rear	Saloon RWD 613961		Flexible Coupling	512677
	1999.07-2002.03		Rear	Saloon RWD 613961	512672S and 537889S different accessory	Flexible Coupling Kit	512672S
	1999.07-2002.03		Rear	Saloon RWD 613961	537889S and 512672S different accessory	Flexible Coupling Kit	537889S
	1999.07-2002.03		Front;Rear	Saloon RWD 613961		Flexible Coupling Kit	512677S
	1999.07-2003.05		Centre	Estate RWD 613961		Center Bearing Support	538667
	1999.07-2003.05		Front	Estate RWD 613961		Flexible Coupling	512672
	1999.07-2003.05		Front;Rear	Estate RWD 613961		Flexible Coupling	512677
	1999.07-2003.05		Rear	Estate RWD 613961	512672S and 537889S different accessory	Flexible Coupling Kit	512672S
	1999.07-2003.05		Rear	Estate RWD 613961	537889S and 512672S different accessory	Flexible Coupling Kit	537889S

	YEAR	TRANSM.	FITTING POSITION	BODY STYLE & DRIVE TYPE & ENGINE	REMARKS	PRODUCT	GSP Ref.
MERCEDES-BENZ **E320**							
3.2 (145 kw)	1999.07-2003.05		Front;Rear	Estate RWD 613961		Flexible Coupling Kit	512677S
3.2 (150 kw)	2002.11-2006.07	AT	Front	Saloon RWD 648961		Propshaft	PS900364
	2002.11-2006.07		Centre	Saloon RWD 648961		Center Bearing Support	538667
	2002.11-2006.07		Front;Rear	Saloon RWD 648961		Flexible Coupling	533884
	2002.11-2006.07		Front;Rear	Saloon RWD 648961		Flexible Coupling Kit	537832S
	2003.04-2006.07	AT	Front	Estate RWD 648961		Propshaft	PS900364
	2003.04-2006.07		Centre	Estate RWD 648961		Center Bearing Support	538667
	2003.04-2006.07		Front;Rear	Estate RWD 648961		Flexible Coupling	533884
	2003.04-2006.07		Front;Rear	Estate RWD 648961		Flexible Coupling Kit	537832S
3.2 (162 kw)	1993.06-1995.06		Centre	Saloon RWD 104992	Inner diameter:25mm	Center Bearing Support	538997
	1993.06-1995.06		Centre	Saloon RWD 104992	Inner diameter:30mm	Center Bearing Support	538998
	1993.06-1995.06		Front;Rear	Saloon RWD 104992		Flexible Coupling	510579
	1993.06-1995.06		Front	Saloon RWD 104992		Flexible Coupling Kit	510580S
	1993.06-1996.01		Centre	Estate RWD 104992		Center Bearing Support	538998
	1993.06-1996.01		Front	Estate RWD 104992		Flexible Coupling	510571
	1993.06-1996.01		Front;Rear	Estate RWD 104992		Flexible Coupling	510579
	1993.06-1996.01		Front	Estate RWD 104992		Flexible Coupling Kit	510580S
	1993.06-1996.07		Centre	Coupe RWD 104992		Center Bearing Support	538998
	1993.06-1996.07		Centre	Cabriolet RWD 104992		Center Bearing Support	538998
	1993.06-1996.07		Front;Rear	Coupe RWD 104992		Flexible Coupling	510579
	1993.06-1996.07		Front;Rear	Cabriolet RWD 104992		Flexible Coupling	510579
	1993.06-1996.07		Front	Coupe RWD 104992		Flexible Coupling Kit	510580S
	1993.06-1996.07		Front	Cabriolet RWD 104992		Flexible Coupling Kit	510580S
	1995.07-1997.06		Centre	Saloon RWD 104995		Center Bearing Support	538667
	1995.07-1997.06		Front;Rear	Saloon RWD 104995		Flexible Coupling	510579
	1995.07-1997.06		Front	Saloon RWD 104995		Flexible Coupling Kit	510580S
3.2 (165 kw)	1997.04-2002.03		Centre	Saloon RWD 112941	Height:57.7mm	Center Bearing Support	538667
	1997.04-2002.03		Front	Saloon RWD 112941	538111 and 510579 different structure	Flexible Coupling	538111
	1997.04-2002.03		Front;Rear	Saloon RWD 112941		Flexible Coupling	510579
	1997.04-2002.03		Front;Rear	Saloon RWD 112941		Flexible Coupling	512678
	1997.04-2002.03		Front	Saloon RWD 112941		Flexible Coupling Kit	510580S
	1997.04-2002.03		Front;Rear	Saloon RWD 112941		Flexible Coupling Kit	512673S
	1997.04-2003.05		Centre	Estate RWD 112941	Height:57.7mm	Center Bearing Support	538667
	1997.04-2003.05		Front;Rear	Estate RWD 112941		Flexible Coupling	510579
	1997.04-2003.05		Front;Rear	Estate RWD 112941		Flexible Coupling	512678
	1997.04-2003.05		Front	Estate RWD 112941		Flexible Coupling Kit	510580S
	1997.04-2003.05		Front;Rear	Estate RWD 112941		Flexible Coupling Kit	512673S
	1997.05-2002.03	5AT	Front	Saloon 4WD 112941	Model year from:2000	Propshaft	PS900348
	1997.05-2002.03	AT	Rear	Saloon 4WD 112941		Propshaft	PS900349
	1997.05-2002.03		Centre	Saloon 4WD 112941		Center Bearing Support	539004
	1997.05-2002.03		Front	Saloon 4WD 112941		Flexible Coupling	510569
	1997.05-2002.03		Front;Rear	Saloon 4WD 112941		Flexible Coupling	510579
	1997.05-2002.03		Front;Rear	Saloon 4WD 112941		Flexible Coupling	512678
	1997.05-2002.03		Front	Saloon 4WD 112941		Flexible Coupling Kit	510570S
	1997.05-2002.03		Front	Saloon 4WD 112941		Flexible Coupling Kit	510580S
	1997.05-2002.03		Front;Rear	Saloon 4WD 112941		Flexible Coupling Kit	512673S
	1997.05-2003.05	AT	Rear	Estate 4WD 112941		Propshaft	PS900349
	1997.05-2003.05		Centre	Estate 4WD 112941		Center Bearing Support	539004
	1997.05-2003.05		Front	Estate 4WD 112941		Flexible Coupling	510569
	1997.05-2003.05		Front;Rear	Estate 4WD 112941		Flexible Coupling	510579
	1997.05-2003.05		Front;Rear	Estate 4WD 112941		Flexible Coupling	512678
	1997.05-2003.05		Front	Estate 4WD 112941		Flexible Coupling Kit	510570S
	1997.05-2003.05		Front	Estate 4WD 112941		Flexible Coupling Kit	510580S
	1997.05-2003.05		Front;Rear	Estate 4WD 112941		Flexible Coupling Kit	512673S
	2002.04-2004.07	AT	Front	Saloon RWD 112949		Propshaft	PS900364
	2002.04-2004.07		Centre	Saloon RWD 112949	Height:57.7mm	Center Bearing Support	538667
	2002.04-2004.07		Front;Rear	Saloon RWD 112949		Flexible Coupling	512678
	2002.04-2004.07		Front;Rear	Saloon RWD 112949		Flexible Coupling Kit	512673S
	2003.04-2004.07	AT	Front	Estate RWD 112949		Propshaft	PS900364
	2003.04-2004.07		Centre	Estate RWD 112949	Height:57.7mm	Center Bearing Support	538667
	2003.04-2004.07		Front;Rear	Estate RWD 112949		Flexible Coupling	512678
	2003.04-2004.07		Front;Rear	Estate RWD 112949		Flexible Coupling Kit	512673S
	2003.06-2005.12	5AT	Front	Estate 4WD 112954		Propshaft	PS900351
	2003.06-2005.12		Centre	Estate 4WD 112954	Height:57.7mm	Center Bearing Support	538667

	YEAR	TRANSM.	FITTING POSITION	BODY STYLE & DRIVE TYPE & ENGINE	REMARKS	PRODUCT	GSP Ref.
MERCEDES-BENZ							
E320							
3.2 (165 kw)	2003.06-2005.12		Front;Rear	Estate 4WD 112954		Flexible Coupling	512678
	2003.06-2005.12		Front;Rear	Estate 4WD 112954		Flexible Coupling Kit	512673S
	2003.08-2004.07	5AT	Front	Saloon 4WD 112954		Propshaft	PS900351
	2003.08-2004.07		Centre	Saloon 4WD 112954	Height:57.7mm	Center Bearing Support	538667
	2003.08-2004.07		Front;Rear	Saloon 4WD 112954		Flexible Coupling	512678
	2003.08-2004.07		Front;Rear	Saloon 4WD 112954		Flexible Coupling Kit	512673S
E350							
2.0 (190 kw)	2019.04-	AT	Front	Saloon 4WD M 264.920	Model year from:2020	Propshaft	PS900548
2.0 (210 kw)	2016.01-2019.06		Centre	Saloon RWD 274920		Center Bearing Support	538622
	2016.01-2019.06		Front;Rear	Saloon RWD 274920		Flexible Coupling	538506
2.0 (220 kw)	2017.10-		Front	Coupe RWD 264920		Flexible Coupling	537630
	2017.10-		Front	Cabriolet RWD 264920		Flexible Coupling	537630
	2017.10-		Front;Rear	Coupe RWD 264920		Flexible Coupling Kit	537630S
	2017.10-		Front;Rear	Cabriolet RWD 264920		Flexible Coupling Kit	537630S
	2018.08-2023.10		Centre	Saloon RWD 264920		Center Bearing Support	538622
	2018.08-2023.10		Front;Rear	Saloon RWD 264920		Flexible Coupling Kit	537630S
2.0 (235 kw)	2016.09-2019.06		Centre	Saloon RWD 274920		Center Bearing Support	538622
	2016.09-2019.06		Front;Rear	Saloon RWD 274920		Flexible Coupling	538506
2.9 (210 kw)	2018.08-2020.06		Front;Rear	Saloon RWD 656929		Flexible Coupling	537851
	2018.08-2020.06		Front;Rear	Estate RWD 656929		Flexible Coupling	537851
	2018.11-		Front;Rear	Cabriolet RWD 656929	9AT	Flexible Coupling	537851
	2018.11-		Front;Rear	Coupe RWD 656929	9AT	Flexible Coupling	537851
3.0 (155 kw)	2009.01-2015.12		Centre	Saloon RWD 642850		Center Bearing Support	538668
	2009.01-2015.12		Rear	Saloon RWD 642850		Flexible Coupling	537843
	2009.01-2015.12		Front;Rear	Saloon RWD 642850		Flexible Coupling	533884
	2009.01-2015.12		Rear	Saloon RWD 642850		Flexible Coupling Kit	533884S
	2009.01-2015.12		Rear	Saloon RWD 642850		Flexible Coupling Kit	537843S
	2009.01-2015.12		Front;Rear	Saloon RWD 642850		Flexible Coupling Kit	537832S
	2009.11-2013.12		Centre	Estate RWD 642850		Center Bearing Support	538668
	2009.11-2013.12		Rear	Estate RWD 642850		Flexible Coupling	537843
	2009.11-2013.12		Front;Rear	Estate RWD 642850		Flexible Coupling	533884
	2009.11-2013.12		Rear	Estate RWD 642850		Flexible Coupling Kit	533884S
	2009.11-2013.12		Front;Rear	Estate RWD 642850		Flexible Coupling Kit	537832S
3.0 (170 kw)	2009.01-2011.06		Centre	Coupe RWD 642836		Center Bearing Support	538668
	2009.01-2011.06		Front;Rear	Coupe RWD 642836		Flexible Coupling	533884
	2009.01-2011.06		Front;Rear	Coupe RWD 642836		Flexible Coupling Kit	537832S
	2009.01-2011.08		Centre	Saloon 4WD 642856		Center Bearing Support	538668
	2009.01-2011.08		Rear	Saloon 4WD 642856		Flexible Coupling	537843
	2009.01-2011.08		Front;Rear	Saloon 4WD 642856		Flexible Coupling	512677
	2009.01-2011.08		Rear	Saloon 4WD 642856		Flexible Coupling Kit	533884S
	2009.01-2011.08		Front;Rear	Saloon 4WD 642856	Inner diameter:50mm	Flexible Coupling Kit	512673S
	2009.01-2011.08		Front;Rear	Saloon 4WD 642856	Inner diameter:69.5mm	Flexible Coupling Kit	537832S
	2009.01-2011.12		Centre	Estate 4WD 642856		Center Bearing Support	538668
	2009.01-2011.12		Centre	Estate RWD 642850		Center Bearing Support	538668
	2009.01-2011.12		Rear	Estate 4WD 642856		Flexible Coupling	537843
	2009.01-2011.12		Rear	Estate RWD 642850		Flexible Coupling	537843
	2009.01-2011.12		Front;Rear	Estate 4WD 642856		Flexible Coupling	533884
	2009.01-2011.12		Front;Rear	Estate RWD 642850		Flexible Coupling	533884
	2009.01-2011.12		Rear	Estate 4WD 642856		Flexible Coupling Kit	533884S
	2009.01-2011.12		Rear	Estate RWD 642850		Flexible Coupling Kit	533884S
	2009.01-2011.12		Front;Rear	Estate 4WD 642856		Flexible Coupling Kit	512673S
	2009.01-2011.12		Front;Rear	Estate 4WD 642856	not for 5AT	Flexible Coupling Kit	537832S
	2009.01-2011.12		Front;Rear	Estate RWD 642850		Flexible Coupling Kit	537832S
	2009.01-2015.12		Centre	Saloon RWD 642850		Center Bearing Support	538668
	2009.01-2015.12		Rear	Saloon RWD 642850		Flexible Coupling	537843
	2009.01-2015.12		Front;Rear	Saloon RWD 642850		Flexible Coupling	533884
	2009.01-2015.12		Rear	Saloon RWD 642850		Flexible Coupling Kit	533884S
	2009.01-2015.12		Rear	Saloon RWD 642850		Flexible Coupling Kit	537843S
	2009.01-2015.12		Front;Rear	Saloon RWD 642850		Flexible Coupling Kit	537832S
	2010.01-2011.12		Front;Rear	Cabriolet RWD 642836		Flexible Coupling	533884
	2010.01-2011.12		Front;Rear	Cabriolet RWD 642836		Flexible Coupling Kit	537832S
3.0 (185 kw)	2013.01-2015.12	7AT	Front	Saloon 4WD 642858		Propshaft	PS901588
	2013.01-2015.12		Centre	Saloon 4WD 642858		Center Bearing Support	538668
	2013.01-2015.12		Centre	Saloon RWD 642852		Center Bearing Support	538668

	YEAR	TRANSM.	FITTING POSITION	BODY STYLE & DRIVE TYPE & ENGINE	REMARKS	PRODUCT	GSP Ref.
MERCEDES-BENZ **E350**							
3.0 (185 kw)	2013.01-2015.12		Front	Saloon 4WD 642858		Flexible Coupling	537851
	2013.01-2015.12		Front	Saloon RWD 642852		Flexible Coupling	537851
	2013.01-2015.12		Rear	Saloon 4WD 642858		Flexible Coupling	537843
	2013.01-2015.12		Rear	Saloon RWD 642852		Flexible Coupling	537843
	2013.01-2015.12		Front;Rear	Saloon 4WD 642858	Inner diameter:57.5mm	Flexible Coupling	512677
	2013.01-2015.12		Front;Rear	Saloon 4WD 642858	Inner diameter:69.5mm	Flexible Coupling	533884
	2013.01-2015.12		Front;Rear	Saloon RWD 642852		Flexible Coupling	533884
	2013.01-2015.12		Front	Saloon 4WD 642858		Flexible Coupling Kit	537851S
	2013.01-2015.12		Rear	Saloon 4WD 642858		Flexible Coupling Kit	533884S
	2013.01-2015.12		Rear	Saloon RWD 642852		Flexible Coupling Kit	533884S
	2013.01-2015.12		Rear	Saloon 4WD 642858	9AT	Flexible Coupling Kit	537794S
	2013.01-2015.12		Front;Rear	Saloon 4WD 642858		Flexible Coupling Kit	537832S
	2013.01-2015.12		Front;Rear	Saloon RWD 642852		Flexible Coupling Kit	537832S
	2013.01-2016.12		Centre	Estate 4WD 642858		Center Bearing Support	538668
	2013.01-2016.12		Centre	Estate RWD 642852		Center Bearing Support	538668
	2013.01-2016.12		Front	Estate 4WD 642858		Flexible Coupling	537851
	2013.01-2016.12		Front	Estate RWD 642852		Flexible Coupling	537851
	2013.01-2016.12		Rear	Estate 4WD 642858		Flexible Coupling	537843
	2013.01-2016.12		Rear	Estate RWD 642852		Flexible Coupling	537843
	2013.01-2016.12		Front;Rear	Estate 4WD 642858	Inner diameter:57.5mm	Flexible Coupling	512677
	2013.01-2016.12		Front;Rear	Estate 4WD 642858	Inner diameter:69.5mm	Flexible Coupling	533884
	2013.01-2016.12		Front;Rear	Estate RWD 642852		Flexible Coupling	533884
	2013.01-2016.12		Rear	Estate 4WD 642858		Flexible Coupling Kit	533884S
	2013.01-2016.12		Rear	Estate RWD 642852		Flexible Coupling Kit	533884S
	2013.01-2016.12		Rear	Estate 4WD 642858	9AT	Flexible Coupling Kit	537794S
	2013.01-2016.12		Front;Rear	Estate 4WD 642858		Flexible Coupling Kit	537832S
	2013.01-2016.12		Front;Rear	Estate RWD 642852		Flexible Coupling Kit	537832S
	2013.03-2016.12		Centre	Cabriolet RWD 642838		Center Bearing Support	538668
	2013.03-2016.12		Front	Cabriolet RWD 642838		Flexible Coupling	537851
	2013.03-2016.12		Front;Rear	Cabriolet RWD 642838		Flexible Coupling	533884
	2013.03-2016.12		Front	Cabriolet RWD 642838		Flexible Coupling Kit	537851S
	2013.03-2016.12		Front;Rear	Cabriolet RWD 642838		Flexible Coupling Kit	537832S
	2013.06-2016.12		Centre	Coupe RWD 642838		Center Bearing Support	538668
	2013.06-2016.12		Front	Coupe RWD 642838		Flexible Coupling	537851
	2013.06-2016.12		Front;Rear	Coupe RWD 642838		Flexible Coupling	533884
	2013.06-2016.12		Front;Rear	Coupe RWD 642838		Flexible Coupling Kit	537832S
3.0 (190 kw)	2014.05-2015.12		Centre	Saloon 4WD 642858		Center Bearing Support	538668
	2014.05-2015.12		Centre	Saloon RWD 642852		Center Bearing Support	538668
	2014.05-2015.12		Front	Saloon 4WD 642858		Flexible Coupling	537851
	2014.05-2015.12		Front	Saloon RWD 642852		Flexible Coupling	537851
	2014.05-2015.12		Front;Rear	Saloon 4WD 642858	9AT	Flexible Coupling	512677
	2014.05-2015.12		Front	Saloon 4WD 642858		Flexible Coupling Kit	537851S
	2014.05-2015.12		Front	Saloon RWD 642852		Flexible Coupling Kit	537851S
	2014.05-2015.12		Rear	Saloon RWD 642852		Flexible Coupling Kit	533884S
	2014.05-2015.12		Rear	Saloon 4WD 642858	9AT	Flexible Coupling Kit	537794S
	2014.05-2015.12		Front;Rear	Saloon 4WD 642858		Flexible Coupling Kit	512673S
	2014.05-2016.12	7AT	Front	Estate 4WD 642858		Propshaft	PS901588
	2014.05-2016.12		Centre	Cabriolet RWD 642838		Center Bearing Support	538668
	2014.05-2016.12		Centre	Coupe RWD 642838		Center Bearing Support	538668
	2014.05-2016.12		Centre	Estate 4WD 642858		Center Bearing Support	538668
	2014.05-2016.12		Centre	Estate RWD 642852		Center Bearing Support	538668
	2014.05-2016.12		Front	Cabriolet RWD 642838		Flexible Coupling	537851
	2014.05-2016.12		Front	Coupe RWD 642838		Flexible Coupling	537851
	2014.05-2016.12		Front	Estate 4WD 642858		Flexible Coupling	537851
	2014.05-2016.12		Front	Estate RWD 642852		Flexible Coupling	537851
	2014.05-2016.12		Front;Rear	Estate 4WD 642858	9AT	Flexible Coupling	512677
	2014.05-2016.12		Front	Cabriolet RWD 642838		Flexible Coupling Kit	537851S
	2014.05-2016.12		Front	Coupe RWD 642838		Flexible Coupling Kit	537851S
	2014.05-2016.12		Front	Estate 4WD 642858		Flexible Coupling Kit	537851S
	2014.05-2016.12		Front	Estate RWD 642852		Flexible Coupling Kit	537851S
	2014.05-2016.12		Rear	Estate RWD 642852		Flexible Coupling Kit	533884S
	2014.05-2016.12		Rear	Estate 4WD 642858	9AT	Flexible Coupling Kit	537794S
	2014.05-2016.12		Front;Rear	Estate 4WD 642858		Flexible Coupling Kit	512673S
	2016.01-2018.05		Centre	Saloon RWD 642855		Center Bearing Support	538622

	YEAR	TRANSM.	FITTING POSITION	BODY STYLE & DRIVE TYPE & ENGINE	REMARKS	PRODUCT	GSP Ref.
MERCEDES-BENZ **E350**							
3.0 (190 kw)	2016.01-2018.05		Front;Rear	Saloon RWD 642855		Flexible Coupling	537851
	2016.01-2018.05		Front	Saloon RWD 642855		Flexible Coupling Kit	537851S
	2016.10-2018.05		Centre	Estate RWD 642855		Center Bearing Support	538622
	2016.10-2018.05		Front;Rear	Estate RWD 642855		Flexible Coupling	537851
	2016.10-2018.05		Front	Estate RWD 642855		Flexible Coupling Kit	537851S
	2017.06-		Front	Coupe 4WD 642873		Flexible Coupling	537630
	2017.06-		Front	Cabriolet 4WD 642873		Flexible Coupling	537630
	2017.06-		Front;Rear	Coupe 4WD 642873		Flexible Coupling Kit	537630S
	2017.06-		Front;Rear	Cabriolet 4WD 642873		Flexible Coupling Kit	537630S
	2017.06-2018.05		Front	Estate 4WD 642873		Flexible Coupling	537630
	2017.06-2018.05		Rear	Saloon 4WD 642873		Flexible Coupling	537630
	2017.06-2018.05		Front;Rear	Estate 4WD 642873		Flexible Coupling Kit	537630S
	2017.06-2018.05		Front;Rear	Saloon 4WD 642873		Flexible Coupling Kit	537630S
3.0 (195 kw)	2011.03-2015.12	AT	Front	Saloon 4WD 642858	for OE no.:A2214103501	Propshaft	PS901588
	2011.03-2015.12		Centre	Saloon RWD 642852		Center Bearing Support	538668
	2011.03-2015.12		Centre	Saloon 4WD 642858		Center Bearing Support	538668
	2011.03-2015.12		Front	Saloon RWD 642852		Flexible Coupling	537851
	2011.03-2015.12		Front	Saloon 4WD 642858		Flexible Coupling	537851
	2011.03-2015.12		Rear	Saloon RWD 642852		Flexible Coupling	537843
	2011.03-2015.12		Rear	Saloon 4WD 642858		Flexible Coupling	537843
	2011.03-2015.12		Front;Rear	Saloon 4WD 642858	Inner diameter:57.5mm	Flexible Coupling	512677
	2011.03-2015.12		Front;Rear	Saloon RWD 642852		Flexible Coupling	533884
	2011.03-2015.12		Front;Rear	Saloon 4WD 642858	Inner diameter:69.5mm	Flexible Coupling	533884
	2011.03-2015.12		Front	Saloon RWD 642852		Flexible Coupling Kit	537851S
	2011.03-2015.12		Rear	Saloon RWD 642852		Flexible Coupling Kit	533884S
	2011.03-2015.12		Rear	Saloon 4WD 642858		Flexible Coupling Kit	533884S
	2011.03-2015.12		Rear	Saloon 4WD 642858	9AT	Flexible Coupling Kit	537794S
	2011.03-2015.12		Front;Rear	Saloon 4WD 642858		Flexible Coupling Kit	512677S
	2011.03-2015.12		Front;Rear	Saloon RWD 642852		Flexible Coupling Kit	537832S
	2011.03-2015.12		Front;Rear	Saloon 4WD 642858	9AT	Flexible Coupling Kit	537832S
	2011.04-2013.12		Centre	Cabriolet RWD 642838		Center Bearing Support	538668
	2011.04-2013.12		Front	Cabriolet RWD 642838		Flexible Coupling	537851
	2011.04-2013.12		Front;Rear	Cabriolet RWD 642838		Flexible Coupling	533884
	2011.04-2013.12		Front;Rear	Cabriolet RWD 642838		Flexible Coupling Kit	537832S
	2011.06-2013.06		Centre	Coupe RWD 642838		Center Bearing Support	538668
	2011.06-2013.06		Front	Coupe RWD 642838		Flexible Coupling	537851
	2011.06-2013.06		Front;Rear	Coupe RWD 642838		Flexible Coupling	533884
	2011.06-2013.06		Front;Rear	Coupe RWD 642838		Flexible Coupling Kit	537832S
	2011.07-2013.12	7AT	Front	Estate 4WD 642858		Propshaft	PS901588
	2011.07-2013.12		Centre	Estate RWD 642852		Center Bearing Support	538668
	2011.07-2013.12		Centre	Estate 4WD 642858		Center Bearing Support	538668
	2011.07-2013.12		Front	Estate RWD 642852		Flexible Coupling	537851
	2011.07-2013.12		Front	Estate 4WD 642858		Flexible Coupling	537851
	2011.07-2013.12		Rear	Estate RWD 642852		Flexible Coupling	537843
	2011.07-2013.12		Rear	Estate 4WD 642858		Flexible Coupling	537843
	2011.07-2013.12		Front;Rear	Estate 4WD 642858	Inner diameter:57.5mm	Flexible Coupling	512677
	2011.07-2013.12		Front;Rear	Estate RWD 642852		Flexible Coupling	533884
	2011.07-2013.12		Front;Rear	Estate 4WD 642858	Inner diameter:69.5mm	Flexible Coupling	533884
	2011.07-2013.12		Front	Estate RWD 642852		Flexible Coupling Kit	537851S
	2011.07-2013.12		Rear	Estate RWD 642852		Flexible Coupling Kit	533884S
	2011.07-2013.12		Rear	Estate 4WD 642858		Flexible Coupling Kit	533884S
	2011.07-2013.12		Rear	Estate 4WD 642858	9AT	Flexible Coupling Kit	537794S
	2011.07-2013.12		Front;Rear	Estate 4WD 642858		Flexible Coupling Kit	512677S
	2011.07-2013.12		Front;Rear	Estate RWD 642852		Flexible Coupling Kit	537832S
	2011.07-2013.12		Front;Rear	Estate 4WD 642858	9AT	Flexible Coupling Kit	537832S
3.5 (200 kw)	2004.08-2006.07	5AT	Front	Estate 4WD 272972		Propshaft	PS900351
	2004.08-2006.07		Centre	Estate 4WD 272972	Height:57.7mm	Center Bearing Support	538667
	2004.08-2006.07		Front	Estate 4WD 272972	7AT	Flexible Coupling	512672
	2004.08-2006.07		Front;Rear	Estate 4WD 272972	Bolt Hole Centres:110mm	Flexible Coupling	512677
	2004.08-2006.07		Front;Rear	Estate 4WD 272972	Bolt Hole Centres:100mm	Flexible Coupling	512678
	2004.08-2006.07		Rear	Estate 4WD 272972	537793S and 537889S different structure	Flexible Coupling Kit	537793S
	2004.08-2006.07		Rear	Estate 4WD 272972		Flexible Coupling Kit	537794S
	2004.08-2006.07		Rear	Estate 4WD 272972	537889S and 537793S different structure	Flexible Coupling Kit	537889S
	2004.08-2006.07		Front;Rear	Estate 4WD 272972		Flexible Coupling Kit	512673S

	YEAR	TRANSM.	FITTING POSITION	BODY STYLE & DRIVE TYPE & ENGINE	REMARKS	PRODUCT	GSP Ref.
MERCEDES-BENZ							
E350							
3.5 (200 kw)	2004.08-2006.07		Front;Rear	Estate 4WD 272972	For OE No.0004110200	Flexible Coupling Kit	512677S
	2004.08-2008.12	5AT	Front	Saloon 4WD 272972	For Model year:2008	Propshaft	PS900350
	2004.08-2008.12	5AT	Front	Saloon 4WD 272972	Model year from:2006,Model year to:2007	Propshaft	PS900351
	2004.08-2008.12		Centre	Saloon 4WD 272972	Height:57.7mm	Center Bearing Support	538667
	2004.08-2008.12		Centre	Saloon RWD 272964	Height:57.7mm	Center Bearing Support	538667
	2004.08-2008.12		Front	Saloon 4WD 272972	7AT	Flexible Coupling	512672
	2004.08-2008.12		Front	Saloon RWD 272964		Flexible Coupling	512672
	2004.08-2008.12		Front;Rear	Saloon 4WD 272972	Bolt Hole Centres:110mm	Flexible Coupling	512677
	2004.08-2008.12		Front;Rear	Saloon RWD 272964	6MT	Flexible Coupling	512677
	2004.08-2008.12		Front;Rear	Saloon 4WD 272972	Bolt Hole Centres:100mm	Flexible Coupling	512678
	2004.08-2008.12		Rear	Saloon 4WD 272972	537793S and 537889S different structure	Flexible Coupling Kit	537793S
	2004.08-2008.12		Rear	Saloon RWD 272964	537793S and 537889S different structure	Flexible Coupling Kit	537793S
	2004.08-2008.12		Rear	Saloon 4WD 272972		Flexible Coupling Kit	537794S
	2004.08-2008.12		Rear	Saloon RWD 272964		Flexible Coupling Kit	537794S
	2004.08-2008.12		Rear	Saloon 4WD 272972	537889S and 537793S different structure	Flexible Coupling Kit	537889S
	2004.08-2008.12		Rear	Saloon RWD 272964	537889S and 537793S different structure	Flexible Coupling Kit	537889S
	2004.08-2008.12		Front;Rear	Saloon 4WD 272972		Flexible Coupling Kit	512673S
	2004.08-2008.12		Front;Rear	Saloon 4WD 272972	For OE No.0004110200	Flexible Coupling Kit	512677S
	2004.08-2008.12		Front;Rear	Saloon RWD 272964		Flexible Coupling Kit	512677S
	2004.08-2009.07		Centre	Estate RWD 272964	Height:57.7mm	Center Bearing Support	538667
	2004.08-2009.07		Front	Estate RWD 272964		Flexible Coupling	512672
	2004.08-2009.07		Front;Rear	Estate RWD 272964	6MT	Flexible Coupling	512677
	2004.08-2009.07		Rear	Estate RWD 272964	537793S and 537889S different structure	Flexible Coupling Kit	537793S
	2004.08-2009.07		Rear	Estate RWD 272964		Flexible Coupling Kit	537794S
	2004.08-2009.07		Rear	Estate RWD 272964	537889S and 537793S different structure	Flexible Coupling Kit	537889S
	2004.08-2009.07		Front;Rear	Estate RWD 272964		Flexible Coupling Kit	512677S
	2009.01-2011.08		Centre	Saloon 4WD 272977		Center Bearing Support	538668
	2009.01-2011.08		Front;Rear	Saloon 4WD 272977		Flexible Coupling	512678
	2009.01-2011.08		Front;Rear	Saloon 4WD 272977		Flexible Coupling Kit	512673S
	2009.01-2011.12		Centre	Estate 4WD 272977	Inner diameter:30mm	Center Bearing Support	538668
	2009.01-2011.12		Front;Rear	Estate 4WD 272977		Flexible Coupling	512678
	2009.01-2011.12		Front;Rear	Estate 4WD 272977		Flexible Coupling Kit	512673S
	2009.01-2013.12		Centre	Saloon RWD 272980		Center Bearing Support	538668
	2009.01-2013.12		Front	Saloon RWD 272980	7AT	Flexible Coupling	512672
	2009.01-2013.12		Front;Rear	Saloon RWD 272980	7AT	Flexible Coupling	512677
	2009.01-2013.12		Front	Saloon RWD 272980	537889S and 537794S different structure	Flexible Coupling Kit	537889S
	2009.01-2013.12		Rear	Saloon RWD 272980		Flexible Coupling Kit	537793S
	2009.01-2013.12		Rear	Saloon RWD 272980	537794S and 537889S different structure	Flexible Coupling Kit	537794S
	2009.01-2013.12		Front;Rear	Saloon RWD 272980		Flexible Coupling Kit	512677S
	2009.06-2011.12		Centre	Coupe RWD 272961/272988	Engine Code:M 272.988	Center Bearing Support	538668
	2009.06-2011.12		Front;Rear	Coupe RWD 272961/272988		Flexible Coupling	512677
	2009.06-2011.12		Front;Rear	Coupe RWD 272961/272988		Flexible Coupling Kit	512677S
	2009.06-2011.12		Front;Rear	Coupe RWD 272961/272988		Flexible Coupling Kit	537794S
	2009.08-2011.12		Centre	Estate RWD 272980		Center Bearing Support	538668
	2009.08-2011.12		Front	Estate RWD 272980	7AT	Flexible Coupling	512672
	2009.08-2011.12		Front;Rear	Estate RWD 272980	7AT	Flexible Coupling	512677
	2009.08-2011.12		Rear	Estate RWD 272980	537793S and 537889S different structure	Flexible Coupling Kit	537793S
	2009.08-2011.12		Rear	Estate RWD 272980	7AT	Flexible Coupling Kit	537794S
	2009.08-2011.12		Rear	Estate RWD 272980	537889S and 537793S different structure	Flexible Coupling Kit	537889S
	2009.08-2011.12		Front;Rear	Estate RWD 272980		Flexible Coupling Kit	512677S
	2010.03-2011.12		Centre	Cabriolet RWD 272961/272988	Engine Code:M 272.988	Center Bearing Support	538668
	2010.03-2011.12		Front;Rear	Cabriolet RWD 272961/272988	7AT	Flexible Coupling	512677
	2010.03-2011.12		Rear	Cabriolet RWD 272961/272988	7AT	Flexible Coupling Kit	537794S
	2010.03-2011.12		Front;Rear	Cabriolet RWD 272961/272988		Flexible Coupling Kit	512677S
3.5 (205 kw)	2004.08-2006.08		Rear	Saloon 4WD M 272.972		Flexible Coupling Kit	537793S
	2004.08-2006.08		Front;Rear	Saloon 4WD M 272.972		Flexible Coupling Kit	512673S
	2004.08-2006.08		Front;Rear	Saloon 4WD M 272.972		Flexible Coupling Kit	512677S
3.5 (215 kw)	2006.05-2008.12		Centre	Saloon RWD 272985	Height:57.7mm	Center Bearing Support	538667
	2006.05-2008.12		Front	Saloon RWD 272985		Flexible Coupling	512672
	2006.05-2008.12		Front;Rear	Saloon RWD 272985		Flexible Coupling	512677
	2006.05-2008.12		Rear	Saloon RWD 272985	537793S and 537889S different structure	Flexible Coupling Kit	537793S
	2006.05-2008.12		Rear	Saloon RWD 272985	537889S and 537793S different structure	Flexible Coupling Kit	537889S
	2006.05-2008.12		Front;Rear	Saloon RWD 272985		Flexible Coupling Kit	512677S
	2006.05-2009.07		Centre	Estate RWD 272985	Height:57.7mm	Center Bearing Support	538667

	YEAR	TRANSM.	FITTING POSITION	BODY STYLE & DRIVE TYPE & ENGINE	REMARKS	PRODUCT	GSP Ref.
MERCEDES-BENZ **E350**							
3.5 (215 kw)	2006.05-2009.07		Front	Estate RWD 272985		Flexible Coupling	512672
	2006.05-2009.07		Front;Rear	Estate RWD 272985	not for 7AT	Flexible Coupling	512677
	2006.05-2009.07		Rear	Estate RWD 272985	537793S and 537889S different structure	Flexible Coupling Kit	537793S
	2006.05-2009.07		Rear	Estate RWD 272985	6AT;7AT	Flexible Coupling Kit	537794S
	2006.05-2009.07		Rear	Estate RWD 272985	537889S and 537793S different structure	Flexible Coupling Kit	537889S
	2006.05-2009.07		Front;Rear	Estate RWD 272985		Flexible Coupling Kit	512677S
	2009.01-2011.08		Centre	Saloon RWD 272983		Center Bearing Support	538668
	2009.01-2011.08		Front	Saloon RWD 272983	7AT	Flexible Coupling	512672
	2009.01-2011.08		Front;Rear	Saloon RWD 272983	7AT	Flexible Coupling	512677
	2009.01-2011.08		Front	Saloon RWD 272983	537889S and 537794S different structure	Flexible Coupling Kit	537889S
	2009.01-2011.08		Rear	Saloon RWD 272983		Flexible Coupling Kit	537793S
	2009.01-2011.08		Rear	Saloon RWD 272983	537794S and 537889S different structure	Flexible Coupling Kit	537794S
	2009.01-2011.08		Front;Rear	Saloon RWD 272983		Flexible Coupling Kit	512677S
	2009.01-2011.12		Centre	Coupe RWD 272982/272984		Center Bearing Support	538668
	2009.01-2011.12		Centre	Estate RWD 272983		Center Bearing Support	538668
	2009.01-2011.12		Front	Estate RWD 272983	7AT	Flexible Coupling	512672
	2009.01-2011.12		Front;Rear	Coupe RWD 272982/272984	7AT	Flexible Coupling	512677
	2009.01-2011.12		Front;Rear	Estate RWD 272983	7AT	Flexible Coupling	512677
	2009.01-2011.12		Rear	Estate RWD 272983	537793S and 537889S different structure	Flexible Coupling Kit	537793S
	2009.01-2011.12		Rear	Coupe RWD 272982/272984	7AT	Flexible Coupling Kit	537794S
	2009.01-2011.12		Rear	Estate RWD 272983	7AT	Flexible Coupling Kit	537794S
	2009.01-2011.12		Rear	Estate RWD 272983	537889S and 537793S different structure	Flexible Coupling Kit	537889S
	2009.01-2011.12		Front;Rear	Coupe RWD 272982/272984		Flexible Coupling Kit	512677S
	2009.01-2011.12		Front;Rear	Estate RWD 272983		Flexible Coupling Kit	512677S
	2010.01-2014.12		Centre	Cabriolet RWD 272982/272984		Center Bearing Support	538668
	2010.01-2014.12		Front;Rear	Cabriolet RWD 272982/272984	7AT	Flexible Coupling	512677
	2010.01-2014.12		Rear	Cabriolet RWD 272982/272984	7AT	Flexible Coupling Kit	537794S
	2010.01-2014.12		Front;Rear	Cabriolet RWD 272982/272984		Flexible Coupling Kit	512677S
3.5 (225 kw)	2009.01-2015.12		Centre	Saloon 4WD 276952	Inner diameter:30mm	Center Bearing Support	538668
	2011.04-2014.12		Centre	Coupe RWD 276957		Center Bearing Support	538668
	2011.04-2014.12		Centre	Cabriolet RWD 276957		Center Bearing Support	538668
	2011.04-2014.12		Front	Coupe RWD 276957		Flexible Coupling	512672
	2011.04-2014.12		Front	Cabriolet RWD 276957		Flexible Coupling	512672
	2011.04-2014.12		Front;Rear	Coupe RWD 276957		Flexible Coupling	512677
	2011.04-2014.12		Front;Rear	Cabriolet RWD 276957	7AT	Flexible Coupling	512677
	2011.04-2014.12		Front	Coupe RWD 276957	537889S and 537794S different structure	Flexible Coupling Kit	537889S
	2011.04-2014.12		Front	Cabriolet RWD 276957	537889S and 537794S different structure	Flexible Coupling Kit	537889S
	2011.04-2014.12		Rear	Coupe RWD 276957		Flexible Coupling Kit	537793S
	2011.04-2014.12		Rear	Cabriolet RWD 276957		Flexible Coupling Kit	537793S
	2011.04-2014.12		Rear	Cabriolet RWD 276957	537794S and 537889S different structure	Flexible Coupling Kit	537794S
	2011.04-2014.12		Front;Rear	Coupe 4WD M 276.957		Flexible Coupling Kit	512673S
	2011.04-2014.12		Front;Rear	Coupe RWD 276957		Flexible Coupling Kit	512677S
	2011.04-2014.12		Front;Rear	Cabriolet RWD 276957		Flexible Coupling Kit	512677S
	2011.04-2014.12		Front;Rear	Coupe RWD M 276.957		Flexible Coupling Kit	512677S
	2011.04-2014.12		Front;Rear	Coupe RWD 276957	537794S and 537889S different structure	Flexible Coupling Kit	537794S
	2011.09-2014.12		Centre	Estate RWD 276952		Center Bearing Support	538668
	2011.09-2014.12		Front	Estate RWD 276952	7AT	Flexible Coupling	512672
	2011.09-2014.12		Front;Rear	Estate RWD 276952	7AT	Flexible Coupling	512677
	2011.09-2014.12		Rear	Estate RWD 276952	7AT	Flexible Coupling Kit	537794S
	2011.09-2014.12		Rear	Estate RWD 276952	7AT	Flexible Coupling Kit	537889S
	2011.09-2014.12		Front;Rear	Estate RWD 276952		Flexible Coupling Kit	512677S
	2011.09-2015.12		Centre	Saloon RWD 276952		Center Bearing Support	538668
	2011.09-2015.12		Front	Saloon RWD 276952	7AT	Flexible Coupling	512672
	2011.09-2015.12		Front;Rear	Saloon RWD 276952	7AT	Flexible Coupling	512677
	2011.09-2015.12		Front	Saloon RWD 276952	537889S and 537794S different structure	Flexible Coupling Kit	537889S
	2011.09-2015.12		Rear	Saloon RWD 276952	537794S and 537889S different structure	Flexible Coupling Kit	537794S
	2011.09-2015.12		Front;Rear	Saloon RWD 276952		Flexible Coupling Kit	512677S
	2011.09-2016.12		Centre	Estate 4WD 276952		Center Bearing Support	538668
	2011.09-2016.12		Front;Rear	Estate 4WD 276952		Flexible Coupling	512678
	2011.09-2016.12		Front;Rear	Estate 4WD 276952		Flexible Coupling Kit	512673S
	2012.01-2014.12		Front;Rear	Convertible RWD M 276.957		Flexible Coupling Kit	512677S
	2013.01-2016.12		Centre	Coupe 4WD 276957		Center Bearing Support	538668
	2013.01-2016.12		Front;Rear	Coupe 4WD 276957		Flexible Coupling	512678
	2013.01-2016.12		Front;Rear	Coupe 4WD 276957		Flexible Coupling Kit	512673S

	YEAR	TRANSM.	FITTING POSITION	BODY STYLE & DRIVE TYPE & ENGINE	REMARKS	PRODUCT	GSP Ref.
MERCEDES-BENZ							
E36 AMG							
3.6 (200 kw)	1993.06-1997.06		Centre	Coupe RWD 104992AMG		Center Bearing Support	538998
	1993.06-1997.06		Front;Rear	Coupe RWD 104992AMG		Flexible Coupling	510579
	1993.06-1997.06		Front	Coupe RWD 104992AMG		Flexible Coupling Kit	510580S
	1993.06-1997.07		Centre	Cabriolet RWD 104992AMG		Center Bearing Support	538998
	1993.06-1997.07		Front;Rear	Cabriolet RWD 104992AMG		Flexible Coupling	510579
	1993.06-1997.07		Front	Cabriolet RWD 104992AMG		Flexible Coupling Kit	510580S
	1994.03-1996.01		Centre	Estate RWD 104992AMG		Center Bearing Support	538998
	1994.03-1996.01		Front;Rear	Estate RWD 104992AMG		Flexible Coupling	510579
	1994.03-1996.01		Front	Estate RWD 104992AMG		Flexible Coupling Kit	510580S
	1996.04-1998.01		Front;Rear	Saloon RWD 104995AMG		Flexible Coupling	510579
E400							
2.0 (280 kw)	2023.06-		Front;Rear	Saloon 4WD 254920		Flexible Coupling	537627
2.9 (243 kw)	2020.06-		Front;Rear	Coupe 4WD 656929		Flexible Coupling Kit	537630S
	2020.06-2023.10		Front;Rear	Saloon 4WD 656929		Flexible Coupling	537851
	2020.06-2023.10		Front;Rear	Saloon 4WD 656929		Flexible Coupling Kit	537630S
	2020.07-		Front;Rear	Cabriolet 4WD 656929		Flexible Coupling	537851
	2020.07-		Front;Rear	Cabriolet 4WD 656929		Flexible Coupling Kit	537630S
	2020.07-2023.10		Front;Rear	Estate 4WD 656929		Flexible Coupling Kit	537630S
2.9 (250 kw)	2018.04-2023.10		Front;Rear	Saloon 4WD 656929		Flexible Coupling	537851
	2018.04-2023.10		Front;Rear	Estate 4WD 656929		Flexible Coupling Kit	537630S
	2018.04-2023.10		Front;Rear	Saloon 4WD 656929		Flexible Coupling Kit	537630S
	2018.08-		Front;Rear	Cabriolet 4WD 656929		Flexible Coupling	537851
	2018.08-		Front;Rear	Cabriolet 4WD 656929		Flexible Coupling Kit	537630S
	2018.08-		Front;Rear	Coupe 4WD 656929		Flexible Coupling Kit	537630S
	2018.12-2020.06		Front;Rear	Saloon RWD 656929		Flexible Coupling	537851
	2019.02-2020.06		Front;Rear	Estate RWD 656929		Flexible Coupling Kit	537630S
3.0 (245 kw)	2013.01-2016.12	7AT	Front	Saloon 4WD 276820	Model year from:2015	Propshaft	PS900357
	2013.01-2016.12		Centre	Estate 4WD 276820		Center Bearing Support	538668
	2013.01-2016.12		Centre	Estate RWD 276820	not for SA code:804	Center Bearing Support	538668
	2013.01-2016.12		Centre	Saloon 4WD 276820		Center Bearing Support	538668
	2013.01-2016.12		Centre	Saloon RWD 276820	not for SA code:804	Center Bearing Support	538668
	2013.03-2016.12		Centre	Cabriolet RWD 276820		Center Bearing Support	538668
	2013.03-2016.12		Centre	Coupe RWD 276820		Center Bearing Support	538668
	2013.03-2016.12		Front	Cabriolet RWD 276820	7AT	Flexible Coupling	512672
	2013.03-2016.12		Front	Coupe RWD 276820	7AT	Flexible Coupling	512672
	2013.03-2016.12		Front	Cabriolet RWD 276820	7AT	Flexible Coupling Kit	537889S
	2013.03-2016.12		Front	Coupe RWD 276820	7AT	Flexible Coupling Kit	537889S
	2013.03-2016.12		Rear	Cabriolet RWD 276820		Flexible Coupling Kit	537793S
	2013.03-2016.12		Rear	Coupe RWD 276820		Flexible Coupling Kit	537793S
	2016.06-2018.05	9AT	Front	Saloon 4WD 276823	Model year to:2017	Propshaft	PS900357
	2016.06-2018.05		Front	Saloon 4WD 276823		Flexible Coupling	537630
	2016.06-2018.05		Front;Rear	Saloon 4WD 276823		Flexible Coupling	537627
	2016.06-2018.05		Front;Rear	Saloon 4WD 276823		Flexible Coupling Kit	537630S
	2016.12-		Front	Coupe 4WD 276823		Flexible Coupling	537630
	2016.12-		Front;Rear	Coupe 4WD 276823		Flexible Coupling	537627
	2016.12-		Front;Rear	Coupe 4WD 276823		Flexible Coupling Kit	537630S
	2017.06-		Front	Cabriolet 4WD 276823		Flexible Coupling	537630
	2017.06-		Front;Rear	Cabriolet 4WD 276823		Flexible Coupling	537627
	2017.06-		Front;Rear	Cabriolet 4WD 276823		Flexible Coupling Kit	537630S
3.5 (245 kw)	2014.07-2015.12		Centre	Saloon 4WD 276850		Center Bearing Support	538668
	2014.07-2015.12		Centre	Saloon RWD 276850	not for SA code:804	Center Bearing Support	538668
	2014.07-2016.12		Centre	Cabriolet RWD 276850		Center Bearing Support	538668
	2014.07-2016.12		Centre	Coupe RWD 276850		Center Bearing Support	538668
	2014.07-2016.12		Centre	Estate 4WD 276850		Center Bearing Support	538668
	2014.07-2016.12		Centre	Estate RWD 276850	not for SA code:804	Center Bearing Support	538668
	2014.07-2016.12		Front	Cabriolet RWD 276850	7AT	Flexible Coupling	512672
	2014.07-2016.12		Front	Coupe RWD 276850	7AT	Flexible Coupling	512672
	2014.07-2016.12		Front	Cabriolet RWD 276850		Flexible Coupling Kit	537889S
	2014.07-2016.12		Front	Coupe RWD 276850		Flexible Coupling Kit	537889S
	2014.07-2016.12		Rear	Cabriolet RWD 276850		Flexible Coupling Kit	537793S
	2014.07-2016.12		Rear	Coupe RWD 276850		Flexible Coupling Kit	537793S
	2016.07-2018.05		Front	Saloon 4WD 276853		Flexible Coupling	537630
	2016.07-2018.05		Front;Rear	Saloon 4WD 276853		Flexible Coupling	537627
	2016.07-2018.05		Front;Rear	Saloon 4WD 276853		Flexible Coupling Kit	537630S

	YEAR	TRANSM.	FITTING POSITION	BODY STYLE & DRIVE TYPE & ENGINE	REMARKS	PRODUCT	GSP Ref.
MERCEDES-BENZ							
E400							
3.5 (245 kw)	2016.10-2018.05		Rear	Estate 4WD 276853		Flexible Coupling	537630
	2016.10-2018.05		Front;Rear	Estate 4WD 276853		Flexible Coupling	537627
	2016.10-2018.05		Front;Rear	Estate 4WD 276853		Flexible Coupling Kit	537630S
4.0 (191 kw)	2003.02-2005.07	AT	Front	Saloon RWD 628961		Propshaft	PS900364
	2003.02-2005.07		Centre	Saloon RWD 628961		Center Bearing Support	538667
	2003.02-2005.07		Front;Rear	Saloon RWD 628961		Flexible Coupling	533884
	2003.02-2005.07		Front;Rear	Saloon RWD 628961		Flexible Coupling Kit	537832S
E420							
4.0 (231 kw)	2005.08-2008.12		Centre	Saloon RWD 629910		Center Bearing Support	538667
	2005.08-2008.12		Rear	Saloon RWD 629910	7AT	Flexible Coupling	537843
	2005.08-2008.12		Front;Rear	Saloon RWD 629910		Flexible Coupling	533884
	2005.08-2008.12		Front;Rear	Saloon RWD 629910		Flexible Coupling Kit	537832S
4.2 (205 kw)	1993.06-1995.06		Centre	Saloon RWD 119975		Center Bearing Support	538997
	1993.06-1995.06		Front	Saloon RWD 119975		Flexible Coupling	512676
	1995.07-1997.10		Centre	Saloon RWD 119985	Height:57.7mm	Center Bearing Support	538667
	1995.07-1997.10		Front;Rear	Saloon RWD 119985		Flexible Coupling	512677
	1995.07-1997.10		Front;Rear	Saloon RWD 119985		Flexible Coupling Kit	512677S
	1996.06-1997.10		Centre	Estate RWD 119985	Height:57.7mm	Center Bearing Support	538667
	1996.06-1997.10		Front;Rear	Estate RWD 119985		Flexible Coupling	512677
	1996.06-1997.10		Front;Rear	Estate RWD 119985		Flexible Coupling Kit	512677S
E43 AMG							
3.0 (295 kw)	2016.07-2018.05		Front;Rear	Saloon 4WD 276823		Flexible Coupling	537630
	2016.07-2018.05		Front;Rear	Saloon 4WD 276823		Flexible Coupling Kit	537630S
	2016.10-2018.05		Front;Rear	Estate 4WD 276823		Flexible Coupling	537630
	2016.10-2018.05		Front;Rear	Estate 4WD 276823		Flexible Coupling Kit	537630S
E430							
4.3 (205 kw)	1997.04-2002.03		Centre	Saloon RWD 113940	Height:57.7mm	Center Bearing Support	538667
	1997.04-2002.03		Front;Rear	Saloon RWD 113940		Flexible Coupling	512677
	1997.04-2002.03		Front;Rear	Saloon RWD 113940		Flexible Coupling Kit	512677S
	1997.11-2003.05		Centre	Estate RWD 113940	Height:57.7mm	Center Bearing Support	538667
	1997.11-2003.05		Front;Rear	Estate RWD 113940		Flexible Coupling	512677
	1997.11-2003.05		Front;Rear	Estate RWD 113940		Flexible Coupling Kit	512677S
	1999.09-2002.03	5AT	Front	Saloon 4WD 113940	Model year from:2000	Propshaft	PS900348
	1999.09-2002.03	AT	Rear	Saloon 4WD 113940		Propshaft	PS900349
	1999.09-2002.03		Centre	Saloon 4WD 113940	Height:57.7mm	Center Bearing Support	538667
	1999.09-2002.03		Front;Rear	Saloon 4WD 113940		Flexible Coupling	512678
	1999.09-2002.03		Front;Rear	Saloon 4WD 113940		Flexible Coupling Kit	512673S
	1999.09-2003.05	AT	Rear	Estate 4WD 113940		Propshaft	PS900349
	1999.09-2003.05		Centre	Estate 4WD 113940	Height:57.7mm	Center Bearing Support	538667
	1999.09-2003.05		Front;Rear	Estate 4WD 113940		Flexible Coupling	512678
	1999.09-2003.05		Front;Rear	Estate 4WD 113940		Flexible Coupling Kit	512673S
E450							
3.0 (270 kw)	2018.08-		Front;Rear	Cabriolet 4WD 276823		Flexible Coupling	537627
	2018.08-		Front;Rear	Coupe 4WD 276823		Flexible Coupling	537627
	2018.08-		Front;Rear	Cabriolet 4WD 276823		Flexible Coupling Kit	537630S
	2018.08-		Front;Rear	Coupe 4WD 276823		Flexible Coupling Kit	537630S
	2018.08-2020.06		Front;Rear	Saloon 4WD 276823		Flexible Coupling	537627
	2018.08-2020.06		Front;Rear	Estate 4WD 276823		Flexible Coupling	537627
	2018.08-2020.06		Front;Rear	Saloon 4WD 276823		Flexible Coupling Kit	537630S
	2018.08-2020.06		Front;Rear	Estate 4WD 276823		Flexible Coupling Kit	537630S
	2019.01-		Front;Rear	Convertible RWD M 276.823	9AT	Flexible Coupling	537851
	2020.07-		Front;Rear	Coupe 4WD 256930	9AT	Flexible Coupling	537851
	2020.07-		Front;Rear	Cabriolet 4WD 256930	9AT	Flexible Coupling	537851
	2020.07-2023.10		Centre	Saloon 4WD 256930		Center Bearing Support	538622
	2020.07-2023.10		Front;Rear	Saloon 4WD 256930		Flexible Coupling	537627
	2020.07-2023.10		Front;Rear	Saloon 4WD 256930		Flexible Coupling Kit	537630S
	2020.08-2023.08		Centre	Estate 4WD 256930		Center Bearing Support	538622
	2020.08-2023.08		Front;Rear	Estate 4WD 256930		Flexible Coupling	537627
3.0 (280 kw)	2023.10-		Front;Rear	Estate 4WD 256830		Flexible Coupling	537627
	2023.10-		Front;Rear	Saloon 4WD 256830		Flexible Coupling	537627
E50 AMG							
5.0 (255 kw)	1996.09-1997.10		Centre	Saloon RWD 119980	Height:57.7mm	Center Bearing Support	538667
	1996.09-1997.10		Front;Rear	Saloon RWD 119980		Flexible Coupling	512677
	1996.09-1997.10		Front;Rear	Saloon RWD 119980		Flexible Coupling Kit	512677S

	YEAR	TRANSM.	FITTING POSITION	BODY STYLE & DRIVE TYPE & ENGINE	REMARKS	PRODUCT	GSP Ref.
MERCEDES-BENZ **E500**							
4.7 (300 kw)	2011.09-2015.12		Centre	Saloon 4WD 278922		Center Bearing Support	538668
	2011.09-2015.12		Centre	Saloon RWD 278922		Center Bearing Support	538668
	2011.09-2015.12		Front;Rear	Saloon 4WD 278922		Flexible Coupling	512677
	2011.09-2015.12		Front;Rear	Saloon RWD 278922		Flexible Coupling	533884
	2011.09-2015.12		Front;Rear	Saloon 4WD 278922		Flexible Coupling Kit	512677S
	2011.09-2015.12		Front;Rear	Saloon 4WD 278922		Flexible Coupling Kit	537794S
	2011.09-2015.12		Front;Rear	Saloon RWD 278922		Flexible Coupling Kit	537832S
	2011.09-2016.12		Centre	Coupe RWD 278922		Center Bearing Support	538668
	2011.09-2016.12		Centre	Cabriolet RWD 278922		Center Bearing Support	538668
	2011.09-2016.12		Centre	Estate 4WD 278922		Center Bearing Support	538668
	2011.09-2016.12		Centre	Estate RWD 278922		Center Bearing Support	538668
	2011.09-2016.12		Front;Rear	Estate 4WD 278922		Flexible Coupling	512677
	2011.09-2016.12		Front;Rear	Coupe RWD 278922		Flexible Coupling	533884
	2011.09-2016.12		Front;Rear	Cabriolet RWD 278922		Flexible Coupling	533884
	2011.09-2016.12		Front;Rear	Estate RWD 278922		Flexible Coupling	533884
	2011.09-2016.12		Front;Rear	Estate 4WD 278922		Flexible Coupling Kit	512677S
	2011.09-2016.12		Front;Rear	Estate 4WD 278922		Flexible Coupling Kit	537794S
	2011.09-2016.12		Front;Rear	Coupe RWD 278922		Flexible Coupling Kit	537832S
	2011.09-2016.12		Front;Rear	Cabriolet RWD 278922		Flexible Coupling Kit	537832S
	2011.09-2016.12		Front;Rear	Estate RWD 278922		Flexible Coupling Kit	537832S
5.0 (225 kw)	2002.04-2005.06	AT	Front	Saloon RWD 113967		Propshaft	PS900364
	2002.04-2005.06		Centre	Saloon RWD 113967		Center Bearing Support	538667
	2002.04-2005.06		Front	Saloon RWD 113967	AT	Flexible Coupling	512672
	2002.04-2005.06		Front	Saloon RWD 113967		Flexible Coupling Kit	537794S
	2002.04-2005.06		Rear	Saloon RWD 113967	537793S and 537889S different structure	Flexible Coupling Kit	537793S
	2002.04-2005.06		Rear	Saloon RWD 113967	537889S and 537793S different structure	Flexible Coupling Kit	537889S
	2003.05-2009.07	AT	Front	Estate RWD 113967		Propshaft	PS900364
	2003.05-2009.07		Centre	Estate RWD 113967		Center Bearing Support	538667
	2003.05-2009.07		Front	Estate RWD 113967	7AT	Flexible Coupling	512672
	2003.05-2009.07		Front	Estate RWD 113967		Flexible Coupling Kit	537794S
	2003.05-2009.07		Rear	Estate RWD 113967	537793S and 537889S different structure	Flexible Coupling Kit	537793S
	2003.05-2009.07		Rear	Estate RWD 113967	537889S and 537793S different structure	Flexible Coupling Kit	537889S
	2003.08-2006.12	AT	Front	Saloon 4WD 113969		Propshaft	PS900364
	2003.08-2006.12		Centre	Saloon 4WD 113969		Center Bearing Support	538667
	2003.08-2006.12		Front	Saloon 4WD 113969	7AT	Flexible Coupling	512672
	2003.08-2006.12		Front;Rear	Saloon 4WD 113969		Flexible Coupling	512678
	2003.08-2006.12		Front	Saloon 4WD 113969		Flexible Coupling Kit	537794S
	2003.08-2006.12		Rear	Saloon 4WD 113969		Flexible Coupling Kit	537889S
	2003.08-2006.12		Front;Rear	Saloon 4WD 113969		Flexible Coupling Kit	512673S
	2003.08-2009.07	AT	Front	Estate 4WD 113969		Propshaft	PS900364
	2003.08-2009.07		Centre	Estate 4WD 113969		Center Bearing Support	538667
	2003.08-2009.07		Front	Estate 4WD 113969	7AT	Flexible Coupling	512672
	2003.08-2009.07		Front	Estate 4WD 113969		Flexible Coupling Kit	537794S
	2003.08-2009.07		Rear	Estate 4WD 113969		Flexible Coupling Kit	537889S
	2003.08-2009.07		Front;Rear	Estate 4WD 113969		Flexible Coupling Kit	512673S
5.0 (235 kw)	1993.06-1995.06		Centre	Saloon RWD 119974		Center Bearing Support	538997
	1993.06-1995.06		Front	Saloon RWD 119974		Flexible Coupling	512676
5.5 (285 kw)	2006.05-2008.12		Centre	Saloon 4WD 273962		Center Bearing Support	538667
	2006.05-2008.12		Front;Rear	Saloon 4WD 273962		Flexible Coupling	533884
	2006.05-2008.12		Front;Rear	Saloon 4WD 273962		Flexible Coupling Kit	512673S
	2006.05-2008.12		Front;Rear	Saloon 4WD 273962	AT	Flexible Coupling Kit	537832S
	2006.05-2009.03		Centre	Saloon RWD 273960		Center Bearing Support	538667
	2006.05-2009.03		Front;Rear	Saloon RWD 273960		Flexible Coupling	533884
	2006.05-2009.03		Front;Rear	Saloon RWD 273960		Flexible Coupling Kit	537832S
	2006.05-2009.07		Centre	Estate 4WD 273962		Center Bearing Support	538667
	2006.05-2009.07		Centre	Estate RWD 273960		Center Bearing Support	538667
	2006.05-2009.07		Front;Rear	Estate 4WD 273962		Flexible Coupling	533884
	2006.05-2009.07		Front;Rear	Estate RWD 273960		Flexible Coupling	533884
	2006.05-2009.07		Front;Rear	Estate 4WD 273962		Flexible Coupling Kit	512673S
	2006.05-2009.07		Front;Rear	Estate 4WD 273962	AT	Flexible Coupling Kit	537832S
	2006.05-2009.07		Front;Rear	Estate RWD 273960		Flexible Coupling Kit	537832S
	2009.01-2011.12		Centre	Saloon 4WD 273970		Center Bearing Support	538668
	2009.01-2011.12		Centre	Saloon RWD 273971		Center Bearing Support	538668
	2009.01-2011.12		Centre	Estate RWD 273971	Inner diameter:30mm	Center Bearing Support	538668

	YEAR	TRANSM.	FITTING POSITION	BODY STYLE & DRIVE TYPE & ENGINE	REMARKS	PRODUCT	GSP Ref.
MERCEDES-BENZ							
E500							
5.5 (285 kw)	2009.01-2011.12		Front;Rear	Saloon 4WD 273970		Flexible Coupling	512678
	2009.01-2011.12		Front;Rear	Saloon RWD 273971		Flexible Coupling	533884
	2009.01-2011.12		Front;Rear	Estate RWD 273971		Flexible Coupling	533884
	2009.01-2011.12		Front;Rear	Saloon 4WD 273970		Flexible Coupling Kit	512673S
	2009.01-2011.12		Front;Rear	Saloon RWD 273971		Flexible Coupling Kit	537832S
	2009.01-2011.12		Front;Rear	Estate RWD 273971		Flexible Coupling Kit	537832S
	2009.01-2016.12		Centre	Coupe RWD 273966		Center Bearing Support	538668
	2009.01-2016.12		Front;Rear	Coupe RWD 273966		Flexible Coupling	533884
	2009.01-2016.12		Front;Rear	Coupe RWD 273966		Flexible Coupling Kit	537832S
	2010.01-2011.12		Centre	Cabriolet RWD 273966		Center Bearing Support	538668
	2010.01-2011.12		Front;Rear	Cabriolet RWD 273966		Flexible Coupling	533884
	2010.01-2011.12		Front;Rear	Cabriolet RWD 273966		Flexible Coupling Kit	537832S
E53 AMG							
3.0 (320 kw)	2018.04-2023.10		Front;Rear	Saloon 4WD 256930		Flexible Coupling	537851
	2018.04-2023.10		Front;Rear	Estate 4WD 256930		Flexible Coupling	537851
	2018.04-2023.10		Front;Rear	Saloon 4WD 256930		Flexible Coupling Kit	537630S
	2018.05-		Front;Rear	Cabriolet 4WD 256930	9AT	Flexible Coupling	537851
	2018.05-		Front;Rear	Coupe 4WD 256930	9AT	Flexible Coupling	537851
E55							
5.5 (260 kw)	1997.09-1998.12	AT	Rear	Saloon RWD M 113.980		Propshaft	PS900349
E55 AMG							
5.4 (260 kw)	1997.01-2002.11	AT	Rear	Saloon RWD 113980		Propshaft	PS900349
	1997.01-2002.11		Centre	Saloon RWD 113980	Height:57.7mm	Center Bearing Support	538667
	1997.01-2002.11		Front	Saloon RWD 113980		Flexible Coupling	512676
	1997.01-2002.11		Front;Rear	Saloon RWD 113980		Flexible Coupling	512677
	1997.01-2002.11		Front;Rear	Saloon RWD 113980		Flexible Coupling Kit	512677S
	1997.11-2003.05	AT	Rear	Estate RWD 113980		Propshaft	PS900349
	1997.11-2003.05		Centre	Estate RWD 113980	Height:57.7mm	Center Bearing Support	538667
	1997.11-2003.05		Front;Rear	Estate RWD 113980		Flexible Coupling	512677
	1997.11-2003.05		Front;Rear	Estate RWD 113980		Flexible Coupling Kit	512677S
5.4 (350 kw)	2002.11-2006.07	AT	Front	Saloon RWD 113990		Propshaft	PS900364
	2002.11-2006.07		Centre	Saloon RWD 113990	Height:57.7mm	Center Bearing Support	538667
	2002.11-2006.07		Front;Rear	Saloon RWD 113990		Flexible Coupling	533884
	2002.11-2006.07		Front;Rear	Saloon RWD 113990		Flexible Coupling Kit	537832S
	2003.08-2006.12	AT	Front	Estate RWD 113990		Propshaft	PS900364
	2003.08-2006.12		Centre	Estate RWD 113990	Height:57.7mm	Center Bearing Support	538667
	2003.08-2006.12		Centre	Estate RWD 113990		Center Bearing Support	538667
	2003.08-2006.12		Front;Rear	Estate RWD 113990		Flexible Coupling	533884
	2003.08-2006.12		Front;Rear	Estate RWD 113990		Flexible Coupling Kit	537832S
E550							
4.6 (300 kw)	2011.09-2015.12	AT	Front	Saloon 4WD M 278.922	Model year from:2012,Model year to:2013	Propshaft	PS900357
	2011.09-2015.12		Front;Rear	Saloon 4WD M 278.922		Flexible Coupling Kit	512677S
E60 AMG							
6.0 (280 kw)	1994.05-1995.06		Centre	Saloon RWD 119974AMG		Center Bearing Support	538997
	1994.05-1995.06		Front	Saloon RWD 119974AMG		Flexible Coupling	512676
E63 AMG							
4.0 (420 kw)	2017.01-2021.11		Front;Rear	Saloon 4WD 177980		Flexible Coupling	537851
	2017.01-2021.11		Front	Saloon 4WD 177980		Flexible Coupling Kit	537851S
	2017.05-2023.10		Front;Rear	Estate 4WD 177980		Flexible Coupling	537851
	2017.05-2023.10		Front	Estate 4WD 177980		Flexible Coupling Kit	537851S
4.0 (450 kw)	2017.01-2023.10		Front;Rear	Saloon 4WD 177980		Flexible Coupling	537851
	2017.01-2023.10		Front	Saloon 4WD 177980		Flexible Coupling Kit	537851S
	2017.05-2023.10		Front;Rear	Estate 4WD 177980		Flexible Coupling	537851
	2017.05-2023.10		Front	Estate 4WD 177980		Flexible Coupling Kit	537851S
5.5 (386 kw)	2011.02-2016.12		Centre	Estate RWD 157981		Center Bearing Support	538668
	2011.02-2016.12		Centre	Saloon RWD 157981		Center Bearing Support	538668
	2011.02-2016.12		Rear	Estate RWD 157981		Flexible Coupling	537843
	2011.02-2016.12		Rear	Saloon RWD 157981		Flexible Coupling	537843
	2011.02-2016.12		Front;Rear	Estate RWD 157981		Flexible Coupling	533884
	2011.02-2016.12		Front;Rear	Saloon RWD 157981		Flexible Coupling	533884
	2011.02-2016.12		Rear	Estate RWD 157981		Flexible Coupling Kit	533884S
	2011.02-2016.12		Rear	Saloon RWD 157981		Flexible Coupling Kit	533884S
	2011.02-2016.12		Front;Rear	Estate RWD 157981		Flexible Coupling Kit	537832S
	2011.02-2016.12		Front;Rear	Saloon RWD 157981		Flexible Coupling Kit	537832S

	YEAR	TRANSM.	FITTING POSITION	BODY STYLE & DRIVE TYPE & ENGINE	REMARKS	PRODUCT	GSP Ref.
MERCEDES-BENZ							
E63 AMG							
5.5 (410 kw)	2010.10-2016.12		Centre	Estate RWD 157981		Center Bearing Support	538668
	2010.10-2016.12		Rear	Estate RWD 157981		Flexible Coupling	537843
	2010.10-2016.12		Front;Rear	Estate RWD 157981		Flexible Coupling	533884
	2010.10-2016.12		Rear	Estate RWD 157981		Flexible Coupling Kit	533884S
	2010.10-2016.12		Front;Rear	Estate RWD 157981		Flexible Coupling Kit	537832S
	2011.05-2016.12		Centre	Saloon RWD 157981		Center Bearing Support	538668
	2011.05-2016.12		Rear	Saloon RWD 157981		Flexible Coupling	537843
	2011.05-2016.12		Front;Rear	Saloon RWD 157981		Flexible Coupling	533884
	2011.05-2016.12		Rear	Saloon RWD 157981		Flexible Coupling Kit	533884S
	2011.05-2016.12		Front;Rear	Saloon RWD 157981		Flexible Coupling Kit	537832S
	2013.01-2016.12		Centre	Estate 4WD 157981		Center Bearing Support	538668
	2013.01-2016.12		Centre	Saloon 4WD 157981		Center Bearing Support	538668
	2013.01-2016.12		Rear	Estate 4WD 157981		Flexible Coupling	537843
	2013.01-2016.12		Rear	Saloon 4WD 157981		Flexible Coupling	537843
	2013.01-2016.12		Front;Rear	Estate 4WD 157981		Flexible Coupling	533884
	2013.01-2016.12		Front;Rear	Saloon 4WD 157981		Flexible Coupling	533884
	2013.01-2016.12		Front	Estate 4WD 157981		Flexible Coupling Kit	537832S
	2013.01-2016.12		Front	Saloon 4WD 157981		Flexible Coupling Kit	537832S
	2013.01-2016.12		Rear	Estate 4WD 157981		Flexible Coupling Kit	533884S
	2013.01-2016.12		Rear	Saloon 4WD 157981		Flexible Coupling Kit	533884S
5.5 (430 kw)	2013.01-2016.12		Centre	Estate 4WD 157981		Center Bearing Support	538668
	2013.01-2016.12		Centre	Saloon 4WD 157981		Center Bearing Support	538668
	2013.01-2016.12		Rear	Estate 4WD 157981		Flexible Coupling	537843
	2013.01-2016.12		Rear	Saloon 4WD 157981		Flexible Coupling	537843
	2013.01-2016.12		Rear	Estate 4WD 157981		Flexible Coupling Kit	533884S
	2013.01-2016.12		Rear	Saloon 4WD 157981		Flexible Coupling Kit	533884S
	2013.06-2016.12		Centre	Estate RWD 157981		Center Bearing Support	538668
	2013.06-2016.12		Centre	Saloon RWD 157981		Center Bearing Support	538668
	2013.06-2016.12		Rear	Estate RWD 157981		Flexible Coupling	537843
	2013.06-2016.12		Rear	Saloon RWD 157981		Flexible Coupling	537843
	2013.06-2016.12		Rear	Estate RWD 157981		Flexible Coupling Kit	533884S
	2013.06-2016.12		Rear	Saloon RWD 157981		Flexible Coupling Kit	533884S
6.2 (378 kw)	2006.08-2009.11		Centre	Saloon RWD 156983	Height:57.7mm	Center Bearing Support	538667
	2006.08-2009.11		Centre	Estate RWD 156983	Height:57.7mm	Center Bearing Support	538667
	2006.08-2009.11		Front;Rear	Saloon RWD 156983		Flexible Coupling	533884
	2006.08-2009.11		Front;Rear	Estate RWD 156983		Flexible Coupling	533884
	2006.08-2009.11		Front;Rear	Saloon RWD 156983		Flexible Coupling Kit	537832S
	2006.08-2009.11		Front;Rear	Estate RWD 156983		Flexible Coupling Kit	537832S
6.2 (386 kw)	2009.12-2011.12		Centre	Estate RWD 156985		Center Bearing Support	538668
	2009.12-2011.12		Front;Rear	Estate RWD 156985		Flexible Coupling	533884
	2009.12-2011.12		Front;Rear	Estate RWD 156985		Flexible Coupling Kit	537832S
	2009.12-2015.12		Centre	Saloon RWD 156985		Center Bearing Support	538668
	2009.12-2015.12		Front;Rear	Saloon RWD 156985		Flexible Coupling	533884
	2009.12-2015.12		Front;Rear	Saloon RWD 156985		Flexible Coupling Kit	537832S
G270							
2.7 (115 kw)	2001.10-2003.07	AT	Front	Terrain cab wagon closed 4WD 612965	From Transmission To Transfer Case	Propshaft	202072
	2001.10-2003.07	AT	Front	Terrain cab wagon closed 4WD 612965	From Transfer Case To Front Axle	Propshaft	PS901716
	2001.10-2003.07	AT	Rear	Terrain cab wagon closed 4WD 612965	Modelcode:463322	Propshaft	PS901822
	2003.01-2006.12	AT	Front	Terrain cab wagon closed 4WD 612963/612966	From Transfer Case To Front Axle	Propshaft	PS901716
G280							
3.0 (135 kw)	2009.04-2012.12	AT	Front	Terrain cab wagon closed 4WD 642884/642975	From Transfer Case To Front Axle	Propshaft	PS901716
G300							
3.0 (83 kw)	1993.09-1994.08	AT	Front	Terrain cab open 4WD 603931		Propshaft	202065
	1993.09-1994.08	AT	Front	Terrain cab wagon closed 4WD 603931		Propshaft	202065
	1993.09-1994.08	4AT	Rear	Terrain cab wagon closed 4WD 603931	For Modelcode:463328	Propshaft	PS901881
	1993.09-1994.08	AT	Rear	Terrain cab open 4WD 603931		Propshaft	PS901822
	1993.09-1994.08	AT	Rear	Terrain cab wagon closed 4WD 603931	Modelcode:463327	Propshaft	PS901822
3.0 (125 kw)	1993.06-1997.08	AT	Front	Terrain cab wagon closed 4WD 103987		Propshaft	202065
	1993.06-1997.08	4AT	Rear	Terrain cab wagon closed 4WD 103987	For Modelcode:463228	Propshaft	PS901881
	1993.06-1997.08	AT	Rear	Terrain cab wagon closed 4WD 103987	Modelcode:463227	Propshaft	PS901822
3.0 (130 kw)	1996.08-2000.07	5AT	Front	Terrain cab wagon closed 4WD 606964	From Transmission To Transfer Case,Wheelbase:3200 mm	Propshaft	202068
	1996.08-2000.07	AT	Rear	Terrain cab wagon closed 4WD 606964	Modelcode:463330	Propshaft	PS901822
	1996.09-2000.07	5AT	Front	Terrain cab open 4WD 606964	From Transmission To Transfer Case,Wheelbase:3200 mm	Propshaft	202068
	1996.09-2000.07	AT	Rear	Terrain cab open 4WD 606964		Propshaft	PS901822

	YEAR	TRANSM.	FITTING POSITION	BODY STYLE & DRIVE TYPE & ENGINE	REMARKS	PRODUCT	GSP Ref.
MERCEDES-BENZ							
G300							
3.0 (135 kw)	2010.04-	AT	Front	Terrain cab wagon closed 4WD 642884/642975	From Transfer Case To Front Axle	Propshaft	PS901716
G320							
3.0 (165 kw)	2006.09-2012.12	AT	Front	Terrain cab wagon closed 4WD 642970	From Transmission To Transfer Case	Propshaft	202398
	2006.09-2012.12	AT	Front	Terrain cab open 4WD 642970	From Transfer Case To Front Axle	Propshaft	PS901716
	2006.09-2012.12	AT	Front	Terrain cab wagon closed 4WD 642970	From Transfer Case To Front Axle	Propshaft	PS901716
	2006.09-2012.12	AT	Rear	Terrain cab open 4WD 642970		Propshaft	PS901822
	2006.09-2012.12	AT	Rear	Terrain cab wagon closed 4WD 642970	Modelcode:463340	Propshaft	PS901822
	2006.09-2012.12		-	Terrain cab wagon closed 4WD 642970		Joint,propshaft	601771
3.2 (155 kw)	1994.09-1997.11	AT	Rear	Terrain cab open 4WD 104996		Propshaft	PS901822
	1994.09-1997.12	4AT	Rear	Terrain cab wagon closed 4WD 104996	For Modelcode:463231	Propshaft	PS901881
	1994.09-1997.12	AT	Rear	Terrain cab wagon closed 4WD 104996	Modelcode:463230	Propshaft	PS901822
3.2 (158 kw)	1997.07-2004.08	5AT	Front	Terrain cab wagon closed 4WD 112945	From Transmission To Transfer Case	Propshaft	202069
	1997.07-2004.08	AT	Front	Terrain cab wagon closed 4WD 112945	From Transfer Case To Front Axle	Propshaft	PS901716
	1997.07-2004.08	AT	Rear	Terrain cab wagon closed 4WD 112945	Modelcode:463244/463232	Propshaft	PS901822
	1997.11-2004.08	5AT	Front	Open Off-Road Vehicle 4WD M 112.945 (11.97-.)		Propshaft	202069
G350							
2.9 (183 kw)	2019.05-2022.02	9AT	Front	Terrain cab wagon closed 4WD 656929		Propshaft	PS901850
2.9 (210 kw)	2019.01-2022.11	9AT	Front	Terrain cab wagon closed 4WD 656929		Propshaft	PS901850
3.0 (155 kw)	2011.07-	AT	Front	Terrain cab wagon closed 4WD 642886	From Transmission To Transfer Case	Propshaft	202398
	2011.07-	AT	Front	Terrain cab wagon closed 4WD 642886	From Transfer Case To Front Axle	Propshaft	PS901716
	2011.07-	AT	Front	Terrain cab open 4WD 642886	From Transfer Case To Front Axle	Propshaft	PS901716
	2011.07-	AT	Rear	Terrain cab wagon closed 4WD 642886	Modelcode:463336	Propshaft	PS901822
	2011.07-	AT	Rear	Terrain cab open 4WD 642886		Propshaft	PS901822
	2011.07-		-	Terrain cab wagon closed 4WD 642886		Joint,propshaft	601771
3.0 (180 kw)	2015.06-	AT	Front	Terrain cab wagon closed 4WD 642887	From Transfer Case To Front Axle	Propshaft	PS901716
G36 AMG							
3.6 (200 kw)	1995.01-1998.07	4AT	Rear	Terrain cab wagon closed 4WD 104996AMG	For Modelcode:463231	Propshaft	PS901881
G400							
2.9 (243 kw)	2019.07-	9AT	Front	Terrain cab wagon closed 4WD 656929		Propshaft	PS901850
4.0 (184 kw)	2000.12-2006.07	5AT	Front	Terrain cab open 4WD 628962	From Transmission To Transfer Case	Propshaft	202071
	2000.12-2006.07	5AT	Front	Terrain cab wagon closed 4WD 628962	From Transmission To Transfer Case	Propshaft	202071
	2000.12-2006.07	AT	Front	Terrain cab open 4WD 628962	From Transfer Case To Front Axle	Propshaft	PS901716
	2000.12-2006.07	AT	Front	Terrain cab wagon closed 4WD 628962	From Transfer Case To Front Axle	Propshaft	PS901716
	2000.12-2006.07	AT	Rear	Terrain cab open 4WD 628962		Propshaft	PS901822
	2000.12-2006.07	AT	Rear	Terrain cab wagon closed 4WD 628962	Modelcode:463332	Propshaft	PS901822
G500							
4.0 (310 kw)	2015.06-	AT	Front	Terrain cab wagon closed 4WD 176980	From Transfer Case To Front Axle	Propshaft	PS901716
	2018.01-	9AT	Front	Terrain cab wagon closed 4WD 176980		Propshaft	PS901850
5.0 (215 kw)	2004.04-2005.12	AT	Front	Terrain cab wagon closed 4WD 113962		Propshaft	202070
5.0 (218 kw)	1997.04-2015.12	AT	Front	Terrain cab wagon closed 4WD 113962	Model year from:2002,Model year to:2008;From Transmission To Transfer Case	Propshaft	202070
	1997.04-2015.12	AT	Front	Terrain cab wagon closed 4WD 113962	From Transfer Case To Front Axle	Propshaft	PS901716
	1997.04-2015.12	AT	Rear	Terrain cab wagon closed 4WD 113962	Modelcode:463254/463247/463240	Propshaft	PS901822
	1998.04-2015.12	AT	Front	Terrain cab open 4WD 113962	Model year from:2002,Model year to:2008	Propshaft	202070
	1998.04-2015.12	AT	Rear	Terrain cab open 4WD 113962		Propshaft	PS901822
5.5 (285 kw)	2008.05-	AT	Rear	Terrain cab wagon closed 4WD 273963	Modelcode:463222	Propshaft	PS901822
	2009.12-	AT	Rear	Terrain cab open 4WD 273963		Propshaft	PS901822
G55 AMG							
5.4 (260 kw)	1999.04-2008.07	AT	Front	Terrain cab wagon closed 4WD 113982	Model year from:2003,Model year to:2005;From Transmission To Transfer Case	Propshaft	202070
	1999.04-2008.07	AT	Front	Terrain cab wagon closed 4WD 113982	From Transfer Case To Front Axle	Propshaft	PS901716
5.4 (350 kw)	2004.06-2006.07	AT	Front	Closed Off-Road Vehicle 4WD M 113.993	Model year to:2005;From Transmission To Transfer Case	Propshaft	202070
	2004.06-2006.07	AT	Front	Closed Off-Road Vehicle 4WD M 113.993	Model year from:2006,Model year to:2011;From Transmission To Transfer Case	Propshaft	202071
	2004.06-2006.07	AT	Front	Closed Off-Road Vehicle 4WD M 113.993	From Transfer Case To Front Axle	Propshaft	PS901716
5.4 (368 kw)	2006.08-2015.12	AT	Front	Terrain cab wagon closed 4WD 113993	From Transfer Case To Front Axle	Propshaft	PS901716
5.4 (373 kw)	2008.08-	AT	Front	Terrain cab wagon closed 4WD 113993	From Transfer Case To Front Axle	Propshaft	PS901716
5.5 (350 kw)	2004.09-2011.12	AT	Front	Closed Off-Road Vehicle 4WD M 113.993	From Transfer Case To Front Axle	Propshaft	PS901716
G63 AMG							
4.0 (430 kw)	2018.03-	9AT	Front	Terrain cab wagon closed 4WD 177980		Propshaft	PS901850
5.5 (400 kw)	2012.05-2018.03	AT	Front	Closed Off-Road Vehicle 4WD M 157.984	From Transfer Case To Front Axle	Propshaft	PS901716
	2014.12-2018.03	AT	Front	Closed Off-Road Vehicle 4WD M 157.984	From Transfer Case To Front Axle	Propshaft	PS901716
5.5 (420 kw)	2015.06-	AT	Front	Terrain cab wagon closed 4WD 157984	From Transfer Case To Front Axle	Propshaft	PS901716
G65 AMG							
6.0 (450 kw)	2012.04-	AT	Front	Terrain cab wagon closed 4WD 279982	From Transfer Case To Front Axle	Propshaft	PS901716
6.0 (463 kw)	2015.06-	AT	Front	Terrain cab wagon closed 4WD 279982	From Transfer Case To Front Axle	Propshaft	PS901716

	YEAR	TRANSM.	FITTING POSITION	BODY STYLE & DRIVE TYPE & ENGINE	REMARKS	PRODUCT	GSP Ref.
MERCEDES-BENZ							
GL320							
3.0 (155 kw)	2009.12-2012.08	AT	Front	SUV 4WD 642820		Joint,propshaft	699219
	2009.12-2012.08		Rear	SUV 4WD 642820		Flexible Coupling Kit	537792S
	2009.12-2012.08		Front;Rear	SUV 4WD 642820		Flexible Coupling Kit	512673S
3.0 (160 kw)	2006.09-2009.12	AT	Front	SUV 4WD OM 642.940	Model year from:2007,Model year to:2009	Propshaft	201958
3.0 (165 kw)	2006.09-2009.05	AT	Front	SUV 4WD 642940	Model year from:2007,Model year to:2009	Propshaft	201958
	2006.09-2009.05	AT	Front	SUV 4WD 642940		Joint,propshaft	699219
	2006.09-2009.05		Rear	SUV 4WD 642940		Flexible Coupling Kit	537792S
	2006.09-2009.05		Front;Rear	SUV 4WD 642940		Flexible Coupling Kit	512673S
GL350							
3.0 (155 kw)	2009.06-2012.08	AT	Front	SUV 4WD 642820		Joint,propshaft	699219
	2009.06-2012.08		Rear	SUV 4WD 642820		Flexible Coupling Kit	537792S
	2009.06-2012.08		Front;Rear	SUV 4WD 642820		Flexible Coupling Kit	512673S
3.0 (165 kw)	2009.06-2012.08	AT	Front	SUV 4WD 642940		Joint,propshaft	699219
	2009.06-2012.08		Rear	SUV 4WD 642940		Flexible Coupling Kit	537792S
	2009.06-2012.08		Front;Rear	SUV 4WD 642940		Flexible Coupling Kit	512673S
3.0 (179 kw)	2012.07-2015.10	AT	Front	SUV 4WD OM 642.826		Propshaft	PS900586
	2012.07-2015.10		Front;Rear	SUV 4WD OM 642.826		Flexible Coupling Kit	537630S
3.0 (183 kw)	2012.07-2015.10	AT	Front	SUV 4WD 642826		Propshaft	PS900586
	2012.07-2015.10		Front;Rear	SUV 4WD 642826		Flexible Coupling Kit	537630S
3.0 (190 kw)	2012.07-2015.10	AT	Front	SUV 4WD 642826		Propshaft	PS900586
	2012.07-2015.10		Front;Rear	SUV 4WD 642826		Flexible Coupling	512677
	2012.07-2015.10		Rear	SUV 4WD 642826	537792S and 537630S different structure	Flexible Coupling Kit	537792S
	2012.07-2015.10		Front;Rear	SUV 4WD 642826	537630S and 537792S different structure	Flexible Coupling Kit	537630S
3.0 (195 kw)	2010.10-2012.08	AT	Front	SUV 4WD 642822		Propshaft	201958
	2010.10-2012.08	AT	Front	SUV 4WD 642822		Joint,propshaft	699219
	2010.10-2012.08		Rear	SUV 4WD 642822		Flexible Coupling Kit	537792S
	2010.10-2012.08		Front;Rear	SUV 4WD 642822		Flexible Coupling Kit	512673S
GL400							
3.0 (245 kw)	2013.08-2015.10		Rear	SUV 4WD 276821		Flexible Coupling	537630
	2013.08-2015.10		Front;Rear	SUV 4WD 276821		Flexible Coupling	512677
	2013.08-2015.10		Rear	SUV 4WD 276821	537630S and 537792S different structure	Flexible Coupling Kit	537630S
	2013.08-2015.10		Rear	SUV 4WD 276821	537792S and 537630S different structure	Flexible Coupling Kit	537792S
	2013.08-2015.10		Front;Rear	SUV 4WD 276821		Flexible Coupling Kit	512673S
GL420							
4.0 (225 kw)	2006.01-2010.12	AT	Front	SUV 4WD 629912		Joint,propshaft	699219
	2006.01-2010.12		Rear	SUV 4WD 629912		Flexible Coupling Kit	537792S
	2006.01-2010.12		Front;Rear	SUV 4WD 629912		Flexible Coupling Kit	512673S
GL450							
3.0 (270 kw)	2014.09-2015.10	AT	Front	SUV 4WD M 276.821	For Model year:2015	Propshaft	PS900345
	2014.09-2015.10		Front;Rear	SUV 4WD M 276.821		Flexible Coupling Kit	537630S
4.0 (225 kw)	2009.06-2012.08	AT	Front	SUV 4WD 629912		Joint,propshaft	699219
	2009.06-2012.08		Rear	SUV 4WD 629912		Flexible Coupling Kit	537792S
	2009.06-2012.08		Front;Rear	SUV 4WD 629912		Flexible Coupling Kit	512673S
4.7 (250 kw)	2006.01-2012.08	AT	Front	SUV 4WD 273923		Propshaft	201958
	2006.01-2012.08	AT	Rear	SUV 4WD 273923	Without Offroad package	Propshaft	PS901473
	2006.01-2012.08	AT	Front	SUV 4WD 273923		Joint,propshaft	699219
	2006.01-2012.08		Rear	SUV 4WD 273923		Flexible Coupling Kit	537792S
	2006.01-2012.08		Front;Rear	SUV 4WD 273923		Flexible Coupling Kit	512673S
4.7 (270 kw)	2012.07-2015.10	AT	Front	SUV 4WD M 278.928	For Model year:2014	Propshaft	PS900345
	2012.07-2015.10		Rear	SUV 4WD M 278.928		Flexible Coupling	537630
	2012.07-2015.10		Front;Rear	SUV 4WD M 278.928		Flexible Coupling Kit	537630S
GL500							
4.0 (310 kw)	2015.04-2015.12		Rear	SUV 4WD M 278.912		Flexible Coupling	537630
4.7 (300 kw)	2014.07-2015.10		Front;Rear	SUV 4WD 278928		Flexible Coupling Kit	537630S
4.7 (320 kw)	2012.07-2015.10		Rear	SUV 4WD 278928		Flexible Coupling	537630
	2012.07-2015.10		Front;Rear	SUV 4WD 278928		Flexible Coupling	512677
	2012.07-2015.10		Rear	SUV 4WD 278928	537792S and 537630S different structure	Flexible Coupling Kit	537792S
	2012.07-2015.10		Front;Rear	SUV 4WD 278928	537630S and 537792S different structure	Flexible Coupling Kit	537630S
5.5 (285 kw)	2006.01-2012.08	AT	Rear	SUV 4WD 273963	Without Offroad package	Propshaft	PS901473
	2006.01-2012.08	AT	Front	SUV 4WD 273963		Joint,propshaft	699219
	2006.01-2012.08		Rear	SUV 4WD 273963		Flexible Coupling Kit	537792S
	2006.01-2012.08		Front;Rear	SUV 4WD 273963		Flexible Coupling Kit	512673S

	YEAR	TRANSM.	FITTING POSITION	BODY STYLE & DRIVE TYPE & ENGINE	REMARKS	PRODUCT	GSP Ref.
MERCEDES-BENZ							
GL550							
5.5 (285 kw)	2006.07-2011.12	AT	Rear	SUV 4WD 273963	Without Offroad package	Propshaft	PS901473
	2006.07-2011.12	AT	Front	SUV 4WD 273963		Joint,propshaft	699219
	2006.07-2011.12		Rear	SUV 4WD 273963		Flexible Coupling Kit	537792S
	2006.07-2011.12		Front;Rear	SUV 4WD 273963		Flexible Coupling Kit	512673S
GL63 AMG							
5.5 (400 kw)	2014.08-2015.10		Front;Rear	SUV 4WD 157982		Flexible Coupling	512677
	2014.08-2015.10		Rear	SUV 4WD 157982		Flexible Coupling Kit	537792S
	2014.08-2015.10		Front;Rear	SUV 4WD 157982		Flexible Coupling Kit	512673S
5.5 (410 kw)	2012.07-2015.10		Centre	SUV 4WD 157982	RWD	Center Bearing Support	539009
	2012.07-2015.10		Front;Rear	SUV 4WD 157982		Flexible Coupling	512677
	2012.07-2015.10		Rear	SUV 4WD 157982		Flexible Coupling Kit	537792S
	2012.07-2015.10		Front;Rear	SUV 4WD 157982		Flexible Coupling Kit	512673S
GLA180							
1.5 (80 kw)	2014.07-2018.05		Centre	SUV FWD 607951		Center Bearing Support	538648
1.6 (90 kw)	2015.02-2019.12		Centre	SUV FWD 270910		Center Bearing Support	538648
GLA200							
1.6 (115 kw)	2013.12-2019.12		Centre	SUV FWD 270910		Center Bearing Support	538648
2.0 (110 kw)	2020.02-		Rear	SUV 4WD 654920		Flexible Coupling	537818
2.2 (100 kw)	2013.12-2019.05		Centre	SUV 4WD 651930		Center Bearing Support	538648
	2013.12-2019.05		Rear	SUV 4WD 651930		Flexible Coupling	537818
	2013.12-2019.12		Centre	SUV FWD 651930		Center Bearing Support	538648
GLA220							
2.0 (135 kw)	2017.01-2019.12		Centre	SUV 4WD 270920		Center Bearing Support	538648
	2017.01-2019.12		Rear	SUV 4WD 270920		Flexible Coupling	537818
2.0 (140 kw)	2020.02-		Rear	SUV 4WD 654920		Flexible Coupling	537818
2.2 (120 kw)	2013.12-2019.12		Rear	SUV 4WD 651930		Flexible Coupling	537818
2.2 (125 kw)	2013.12-2019.05		Centre	SUV FWD 651930		Center Bearing Support	538648
	2013.12-2019.12		Centre	SUV 4WD 651930		Center Bearing Support	538648
	2013.12-2019.12		Rear	SUV 4WD 651930		Flexible Coupling	537818
2.2 (130 kw)	2015.07-2019.05		Centre	SUV FWD 651930		Center Bearing Support	538648
	2015.07-2019.12		Centre	SUV 4WD 651930		Center Bearing Support	538648
	2015.07-2019.12		Rear	SUV 4WD 651930		Flexible Coupling	537818
GLA250							
2.0 (155 kw)	2013.12-2019.12		Centre	SUV FWD 270920		Center Bearing Support	538648
	2013.12-2019.12		Rear	SUV 4WD 270920		Flexible Coupling	537818
2.0 (165 kw)	2020.02-		Rear	SUV 4WD 260920		Flexible Coupling	537818
GLA35 AMG							
2.0 (225 kw)	2020.06-		Rear	SUV 4WD 260920		Flexible Coupling	537818
GLA45 AMG							
2.0 (265 kw)	2014.05-2019.06	7AT	Rear	SUV 4WD 133980	Model year to:2019	Propshaft	PS900347
	2014.05-2019.06	7AT	-	SUV 4WD 133980	Model year to:2019	Joint,propshaft	605119
	2014.05-2019.06		Rear	SUV 4WD 133980		Flexible Coupling	537818
2.0 (280 kw)	2015.07-2019.06	7AT	Rear	SUV 4WD 133980	Model year to:2019	Propshaft	PS900347
	2015.07-2019.06	7AT	-	SUV 4WD 133980	Model year to:2019	Joint,propshaft	605119
	2015.07-2019.06		Rear	SUV 4WD 133980		Flexible Coupling	537818
2.0 (285 kw)	2020.06-		Rear	SUV 4WD 139980		Flexible Coupling	537818
2.0 (310 kw)	2020.06-		Rear	SUV 4WD 139980		Flexible Coupling	537818
GLB200							
1.3 (120 kw)	2019.08-		Rear	SUV 4WD 282914		Flexible Coupling	537818
2.0 (110 kw)	2019.08-		Rear	SUV 4WD 654920		Flexible Coupling	537818
GLB220							
2.0 (140 kw)	2019.08-		Rear	SUV 4WD 654920		Flexible Coupling	537818
GLB250							
2.0 (165 kw)	2019.08-		Rear	SUV 4WD 260920		Flexible Coupling	537818
GLB35 AMG							
2.0 (225 kw)	2019.08-		Rear	SUV 4WD 260920		Flexible Coupling	537818
GLC200							
2.0 (120 kw)	2019.04-2021.08		Front;Rear	SUV RWD 654920		Flexible Coupling Kit	537630S
	2019.04-2022.06		Rear	SUV 4WD 654920		Flexible Coupling	537847
	2019.04-2022.06		Front;Rear	SUV 4WD 654920		Flexible Coupling Kit	537630S
	2019.04-2022.06		Front;Rear	SUV RWD 654920		Flexible Coupling Kit	537630S
	2019.04-2023.03		Rear	SUV 4WD 654920		Flexible Coupling	537847
	2019.04-2023.03		Front;Rear	SUV 4WD 654920		Flexible Coupling Kit	537630S

	YEAR	TRANSM.	FITTING POSITION	BODY STYLE & DRIVE TYPE & ENGINE	REMARKS	PRODUCT	GSP Ref.
MERCEDES-BENZ							
GLC200							
2.0 (135 kw)	2016.06-2019.04	AT	Rear	SUV 4WD M 274.920		Propshaft	PS900593
	2016.06-2019.04		Rear	SUV 4WD M 274.920		Flexible Coupling	537847
	2016.06-2019.04		Front;Rear	SUV RWD M 274.920		Flexible Coupling Kit	537627S
	2016.11-2019.04	AT	Rear	SUV 4WD M 274.920		Propshaft	PS900593
	2016.11-2019.04		Rear	SUV 4WD M 274.920		Flexible Coupling	537847
2.0 (145 kw)	2016.01-2022.06		Rear	SUV 4WD 264920/274920		Flexible Coupling	537847
	2016.01-2022.06		Front;Rear	SUV 4WD 264920/274920		Flexible Coupling	537627
	2016.01-2022.06		Front;Rear	SUV 4WD 264920/274920		Flexible Coupling Kit	537627S
	2017.01-2023.03		Rear	SUV 4WD 264920/274920		Flexible Coupling	537847
GLC220							
2.0 (143 kw)	2019.04-2022.06		Rear	SUV 4WD 654920		Flexible Coupling	537847
	2019.04-2022.06		Front;Rear	SUV RWD 654920		Flexible Coupling Kit	537630S
	2019.04-2023.03		Rear	SUV 4WD 654920		Flexible Coupling	537847
2.2 (120 kw)	2015.06-2019.04		Rear	SUV 4WD 651921		Flexible Coupling	537847
	2015.06-2019.04		Front;Rear	SUV 4WD 651921		Flexible Coupling Kit	537627S
	2016.06-2019.04		Rear	SUV 4WD 651921		Flexible Coupling	537847
	2016.06-2019.04		Front;Rear	SUV 4WD 651921		Flexible Coupling Kit	537627S
2.2 (125 kw)	2015.06-2019.04		Rear	SUV 4WD 651921		Flexible Coupling	537847
	2015.06-2019.04		Front;Rear	SUV 4WD 651921		Flexible Coupling Kit	537627S
	2016.06-2019.04		Rear	SUV 4WD 651921		Flexible Coupling	537847
	2016.06-2019.04		Front;Rear	SUV 4WD 651921		Flexible Coupling	537627
	2016.06-2019.04		Front;Rear	SUV 4WD 651921		Flexible Coupling Kit	537627S
GLC250							
2.0 (155 kw)	2015.06-2019.04	AT	Rear	SUV 4WD 274920		Propshaft	PS900593
	2015.06-2019.04		Rear	SUV 4WD 274920		Flexible Coupling	537847
	2015.06-2019.04		Rear	SUV 4WD M 274.920		Flexible Coupling	537847
	2015.06-2019.04		Front;Rear	SUV 4WD 274920		Flexible Coupling	537627
	2015.06-2019.04		Front;Rear	SUV 4WD 274920		Flexible Coupling Kit	537627S
	2016.06-2019.04	AT	Rear	SUV 4WD 274920		Propshaft	PS900593
	2016.06-2019.04		Rear	SUV 4WD 274920		Flexible Coupling	537847
2.2 (150 kw)	2015.06-2019.04		Rear	SUV 4WD 651921	for right-hand drive vehicles,9AT	Flexible Coupling	537630
	2015.06-2019.04		Rear	SUV 4WD 651921	for left-hand drive vehicles	Flexible Coupling	537847
	2015.06-2019.04		Front;Rear	SUV 4WD 651921		Flexible Coupling	537627
	2015.06-2019.04		Rear	SUV 4WD 651921	9AT	Flexible Coupling Kit	537630S
	2015.06-2019.04		Front;Rear	SUV 4WD 651921		Flexible Coupling Kit	537627S
	2016.06-2019.04		Rear	SUV 4WD 651921	for right-hand drive vehicles,9AT	Flexible Coupling	537630
	2016.06-2019.04		Rear	SUV 4WD 651921	for left-hand drive vehicles	Flexible Coupling	537847
	2016.06-2019.04		Front;Rear	SUV 4WD 651921		Flexible Coupling	537627
	2016.06-2019.04		Front;Rear	SUV 4WD 651921		Flexible Coupling Kit	537630S
GLC260							
2.0 (145 kw)	2019.11-2023.03		Rear	SUV 4WD M 264.920		Flexible Coupling	537847
	2019.11-2023.03		Front;Rear	SUV 4WD M 264.920		Flexible Coupling Kit	537627S
GLC300							
2.0 (177 kw)	2015.07-2019.04	AT	Front	SUV 4WD M 274.920	Model year from:2016	Propshaft	PS900548
	2015.07-2019.04		Rear	SUV 4WD M 274.920		Flexible Coupling	537847
2.0 (180 kw)	2015.07-2019.04	AT	Front	SUV 4WD 274920	Model year from:2016	Propshaft	PS900548
	2015.07-2019.04	AT	Rear	SUV 4WD 274920		Propshaft	PS900593
	2015.07-2019.04		Rear	SUV 4WD 274920		Flexible Coupling	537847
	2015.07-2019.04		Front;Rear	SUV 4WD 274920		Flexible Coupling	537627
	2015.07-2019.04		Front;Rear	SUV 4WD 274920		Flexible Coupling Kit	537627S
	2016.06-2019.04	AT	Front	SUV 4WD 274920		Propshaft	PS900548
	2016.06-2019.04	AT	Rear	SUV 4WD 274920		Propshaft	PS900593
	2016.06-2019.04		Rear	SUV 4WD 274920		Flexible Coupling	537847
	2019.04-2022.06		Rear	SUV 4WD 654920		Flexible Coupling	537847
	2019.04-2022.06		Front;Rear	SUV 4WD 654920		Flexible Coupling Kit	537630S
	2019.04-2023.03		Rear	SUV 4WD 654920		Flexible Coupling	537847
	2019.04-2023.03		Front;Rear	SUV 4WD 654920		Flexible Coupling Kit	537630S
2.0 (190 kw)	2015.09-2022.06		Rear	SUV 4WD 264920/274920		Flexible Coupling	537847
	2015.09-2022.06		Front;Rear	SUV 4WD 264920/274920		Flexible Coupling	537627
	2015.09-2022.06		Front;Rear	SUV 4WD 264920/274920		Flexible Coupling Kit	537627S
	2016.11-2023.03		Rear	SUV 4WD 264920/274920		Flexible Coupling	537847
	2019.11-2023.03	AT	Front	SUV 4WD 264920	Model year to:2022	Propshaft	PS900548
	2019.11-2023.03		Rear	SUV 4WD 264920		Flexible Coupling	537847

	YEAR	TRANSM.	FITTING POSITION	BODY STYLE & DRIVE TYPE & ENGINE	REMARKS	PRODUCT	GSP Ref.
MERCEDES-BENZ							
GLC300							
2.0 (225 kw)	2020.05-2022.06		Rear	SUV 4WD 654920		Flexible Coupling	537847
	2020.05-2023.03		Rear	SUV 4WD 654920		Flexible Coupling	537847
2.0 (235 kw)	2019.11-2022.06		Rear	SUV 4WD 274920	7AT	Flexible Coupling	538503
	2019.11-2022.06		Front;Rear	SUV 4WD 274920		Flexible Coupling	537627
	2019.11-2022.06		Front;Rear	SUV 4WD 274920		Flexible Coupling Kit	537627S
	2019.11-2023.03		Rear	SUV 4WD 274920	7AT	Flexible Coupling	538503
GLC350							
2.0 (235 kw)	2016.01-2019.04		Rear	SUV 4WD 274920	7AT	Flexible Coupling	538503
	2016.01-2019.04		Front;Rear	SUV 4WD 274920		Flexible Coupling	537627
	2016.01-2019.04		Front;Rear	SUV 4WD 274920		Flexible Coupling Kit	537627S
	2016.10-2019.04		Rear	SUV 4WD 274920	9AT	Flexible Coupling	538503
GLC400							
2.9 (243 kw)	2019.08-2022.06		Front;Rear	SUV 4WD 656929		Flexible Coupling Kit	537630S
	2019.08-2023.03		Front;Rear	SUV 4WD 656929		Flexible Coupling Kit	537630S
GLC43 AMG							
3.0 (270 kw)	2015.07-2019.08		Front;Rear	SUV 4WD 276823		Flexible Coupling	537627
	2015.07-2019.08		Front;Rear	SUV 4WD 276823		Flexible Coupling Kit	537627S
	2016.10-2019.08		Front;Rear	SUV 4WD 276823		Flexible Coupling	537627
	2016.10-2019.08		Front;Rear	SUV 4WD 276823		Flexible Coupling Kit	537627S
3.0 (287 kw)	2019.08-2022.06		Front;Rear	SUV 4WD 276823		Flexible Coupling	537627
	2019.08-2022.06		Front;Rear	SUV 4WD 276823		Flexible Coupling Kit	537627S
	2019.08-2023.03		Front;Rear	SUV 4WD 276823		Flexible Coupling	537627
	2019.08-2023.03		Front;Rear	SUV 4WD 276823		Flexible Coupling Kit	537627S
GLC63 AMG							
4.0 (350 kw)	2017.06-2022.06		Rear	SUV 4WD 177980		Flexible Coupling	537851
	2017.06-2023.03		Rear	SUV 4WD 177980		Flexible Coupling	537851
4.0 (375 kw)	2017.06-2022.06		Rear	SUV 4WD 177980		Flexible Coupling	537851
	2017.06-2023.03		Rear	SUV 4WD 177980		Flexible Coupling	537851
GLE250							
2.2 (150 kw)	2015.04-2018.10		Rear	SUV RWD 651960		Flexible Coupling	538501
	2015.04-2018.10		Front;Rear	SUV 4WD 651960		Flexible Coupling	512677
	2015.04-2018.10		Front;Rear	SUV RWD 651960		Flexible Coupling	512677
	2015.04-2018.10		Rear	SUV 4WD 651960		Flexible Coupling Kit	537792S
	2015.04-2018.10		Rear	SUV RWD 651960	Inner diameter:57.5mm	Flexible Coupling Kit	537792S
	2015.04-2018.10		Rear	SUV RWD 651960	Inner diameter:58mm	Flexible Coupling Kit	538501S
	2015.04-2018.10		Front;Rear	SUV 4WD 651960		Flexible Coupling Kit	512673S
	2015.04-2018.10		Front;Rear	SUV RWD 651960		Flexible Coupling Kit	512673S
GLE300							
2.0 (180 kw)	2018.10-2023.03		Front;Rear	SUV 4WD 654920		Flexible Coupling	537627
	2018.10-2023.03		Front;Rear	SUV 4WD 654920		Flexible Coupling Kit	537627S
GLE320							
3.0 (200 kw)	2015.09-2019.10	AT	Front	SUV 4WD M 276.821		Propshaft	PS900606
	2015.09-2019.10		Front	SUV 4WD M 276.821		Flexible Coupling	537630
	2015.09-2019.10		Front;Rear	SUV 4WD M 276.821		Flexible Coupling Kit	537630S
	2015.10-2018.10		Front;Rear	SUV 4WD 276821		Flexible Coupling	512677
	2015.10-2018.10		Rear	SUV 4WD 276821		Flexible Coupling Kit	537792S
	2015.10-2018.10		Front;Rear	SUV 4WD 276821		Flexible Coupling Kit	512673S
GLE350							
2.0 (225 kw)	2019.11-2023.03		Front;Rear	SUV 4WD 654920		Flexible Coupling	537851
2.0 (235 kw)	2020.03-2023.03		Front;Rear	SUV 4WD 654920		Flexible Coupling	537851
2.9 (200 kw)	2018.12-2021.06		Front	SUV 4WD 656929		Flexible Coupling	537851
	2019.11-2023.03		Front	SUV 4WD 656929		Flexible Coupling	537851
3.0 (183 kw)	2015.04-2018.10	AT	Front	SUV 4WD 642826		Propshaft	PS900586
	2015.04-2018.10	AT	Rear	SUV 4WD 642826		Propshaft	PS900622
	2015.04-2018.10	AT	Rear	SUV 4WD 642826		Joint,propshaft	605168
	2015.04-2018.10		Front;Rear	SUV 4WD 642826		Flexible Coupling	512677
3.0 (190 kw)	2015.04-2018.10	AT	Front	SUV 4WD 642826		Propshaft	PS900586
	2015.04-2018.10	AT	Rear	SUV 4WD 642826		Propshaft	PS900622
	2015.04-2018.10	AT	Rear	SUV 4WD 642826		Joint,propshaft	605168
	2015.04-2018.10		Front;Rear	SUV 4WD 642826		Flexible Coupling	512677
	2015.04-2018.10		Rear	SUV 4WD 642826		Flexible Coupling Kit	537792S
3.5 (225 kw)	2015.11-2018.10		Front;Rear	SUV 4WD M 276.955		Flexible Coupling Kit	512673S

	YEAR	TRANSM.	FITTING POSITION	BODY STYLE & DRIVE TYPE & ENGINE	REMARKS	PRODUCT	GSP Ref.
MERCEDES-BENZ							
GLE400							
2.9 (243 kw)	2018.12-2023.03		Front	SUV 4WD 656929		Flexible Coupling	537851
	2019.11-2023.03		Front	SUV 4WD 656929		Flexible Coupling	537851
3.0 (245 kw)	2015.03-2019.10	AT	Front	SUV 4WD 276821/276825		Propshaft	PS900606
	2015.03-2019.10		Front	SUV 4WD 276821/276825		Flexible Coupling	537630
	2015.03-2019.10		Front;Rear	SUV 4WD 276821/276825		Flexible Coupling	537627
	2015.03-2019.10		Front;Rear	SUV 4WD 276821/276825		Flexible Coupling Kit	537630S
	2015.04-2018.10	AT	Front	SUV 4WD 276821/276825	Model year from:2016	Propshaft	PS900345
	2015.04-2018.10		Front;Rear	SUV 4WD 276821/276825		Flexible Coupling	512677
	2015.04-2018.10		Rear	SUV 4WD 276821/276825		Flexible Coupling Kit	537792S
GLE43 AMG							
3.0 (270 kw)	2016.05-2018.10	9AT	Rear	SUV 4WD 276821		Propshaft	PS901717
	2016.05-2018.10		Front	SUV 4WD 276821		Flexible Coupling	537630
	2016.05-2018.10		Front;Rear	SUV 4WD 276821		Flexible Coupling	512677
	2016.05-2018.10		Rear	SUV 4WD 276821	537792S and 537630S different structure	Flexible Coupling Kit	537792S
	2016.05-2018.10		Front;Rear	SUV 4WD 276821	537630S and 537792S different structure	Flexible Coupling Kit	537630S
	2016.05-2019.10	AT	Front	SUV 4WD 276821		Propshaft	PS900606
	2016.05-2019.10	9AT	Rear	SUV 4WD 276821		Propshaft	PS901717
	2016.05-2019.10		Front;Rear	SUV 4WD 276821		Flexible Coupling Kit	537630S
3.0 (287 kw)	2017.06-2018.10	AT	Front	SUV 4WD 276821		Propshaft	PS900345
	2017.06-2018.10	9AT	Rear	SUV 4WD 276821		Propshaft	PS901717
	2017.06-2018.10		Front	SUV 4WD 276821		Flexible Coupling	537630
	2017.06-2018.10		Front;Rear	SUV 4WD 276821		Flexible Coupling	512677
	2017.06-2018.10		Rear	SUV 4WD 276821	537792S and 537630S different structure	Flexible Coupling Kit	537792S
	2017.06-2018.10		Front;Rear	SUV 4WD 276821	537630S and 537792S different structure	Flexible Coupling Kit	537630S
	2017.06-2019.10	AT	Front	SUV 4WD 276821		Propshaft	PS900606
	2017.06-2019.10	9AT	Rear	SUV 4WD 276821		Propshaft	PS901717
	2017.06-2019.10		Front;Rear	SUV 4WD 276821		Flexible Coupling Kit	537630S
GLE450 AMG							
3.0 (270 kw)	2015.03-2019.10	9AT	Rear	SUV 4WD 276821		Propshaft	PS901717
	2015.03-2019.10		Front	SUV 4WD 276821		Flexible Coupling	537630
	2015.03-2019.10		Front;Rear	SUV 4WD 276821		Flexible Coupling Kit	537630S
	2015.10-2018.10	AT	Front	SUV 4WD 276821	For Model year:2016	Propshaft	PS900345
	2015.10-2018.10	9AT	Rear	SUV 4WD 276821		Propshaft	PS901717
	2015.10-2018.10		Front;Rear	SUV 4WD 276821		Flexible Coupling	512677
	2015.10-2018.10		Rear	SUV 4WD 276821	537792S and 537630S different structure	Flexible Coupling Kit	537792S
	2015.10-2018.10		Front;Rear	SUV 4WD 276821	537630S and 537792S different structure	Flexible Coupling Kit	537630S
GLE500							
3.0 (325 kw)	2015.04-2018.10		Rear	SUV 4WD 276821		Flexible Coupling	538501
	2015.04-2018.10		Front;Rear	SUV 4WD 276821		Flexible Coupling	512677
	2015.04-2018.10		Rear	SUV 4WD 276821	Inner diameter:57.5mm	Flexible Coupling Kit	537792S
	2015.04-2018.10		Rear	SUV 4WD 276821	Inner diameter:58mm	Flexible Coupling Kit	538501S
	2015.04-2018.10		Front;Rear	SUV 4WD 276821		Flexible Coupling Kit	512673S
4.0 (310 kw)	2016.12-2019.10		Front	SUV 4WD M 278.912		Flexible Coupling	537630
	2016.12-2019.10		Front;Rear	SUV 4WD M 278.912		Flexible Coupling Kit	537630S
4.7 (320 kw)	2015.04-2018.10		Rear	SUV 4WD 278928		Flexible Coupling	537630
	2015.04-2018.10		Front;Rear	SUV 4WD 278928		Flexible Coupling	512677
	2015.04-2018.10		Rear	SUV 4WD 278928	537630S and 537792S different structure	Flexible Coupling Kit	537630S
	2015.04-2018.10		Rear	SUV 4WD 278928	537792S and 537630S different structure	Flexible Coupling Kit	537792S
	2015.04-2018.10		Front;Rear	SUV 4WD 278928		Flexible Coupling Kit	512673S
4.7 (335 kw)	2015.10-2018.10		Rear	SUV 4WD 278928		Flexible Coupling	537630
	2015.10-2018.10		Front;Rear	SUV 4WD 278928		Flexible Coupling	512677
	2015.10-2018.10		Rear	SUV 4WD 278928	537630S and 537792S different structure	Flexible Coupling Kit	537630S
	2015.10-2018.10		Rear	SUV 4WD 278928	537792S and 537630S different structure	Flexible Coupling Kit	537792S
	2015.10-2018.10		Front;Rear	SUV 4WD 278928		Flexible Coupling Kit	512673S
	2015.10-2019.10		Front	SUV 4WD 278928		Flexible Coupling	537630
	2015.10-2019.10		Front;Rear	SUV 4WD 278928		Flexible Coupling Kit	537630S
GLE53 AMG							
3.0 (320 kw)	2019.04-		Front	SUV 4WD 256830/256930		Flexible Coupling	537851
GLE580							
4.0 (360 kw)	2019.11-2023.03		Front	SUV 4WD 176980		Flexible Coupling	537851
GLE63 AMG							
5.5 (410 kw)	2015.04-2018.10		Front;Rear	SUV 4WD 157982		Flexible Coupling	512677
	2015.04-2018.10		Rear	SUV 4WD 157982		Flexible Coupling Kit	537792S
	2015.04-2018.10		Front;Rear	SUV 4WD 157982		Flexible Coupling Kit	512673S

	YEAR	TRANSM.	FITTING POSITION	BODY STYLE & DRIVE TYPE & ENGINE	REMARKS	PRODUCT	GSP Ref.
MERCEDES-BENZ							
GLE63 AMG							
5.5 (430 kw)	2015.04-2018.10		Front;Rear	SUV 4WD 157982		Flexible Coupling	512677
	2015.04-2018.10		Rear	SUV 4WD 157982		Flexible Coupling Kit	537792S
	2015.04-2018.10		Front;Rear	SUV 4WD 157982		Flexible Coupling Kit	512673S
GLK200							
2.0 (135 kw)	2013.08-2015.12		Front;Rear	SUV RWD 274920		Flexible Coupling	512678
	2013.08-2015.12		Front;Rear	SUV RWD 274920		Flexible Coupling Kit	512673S
2.2 (100 kw)	2013.12-2015.06		Front;Rear	SUV RWD 651916	5AT;6MT;7AT	Flexible Coupling	512677
	2013.12-2015.06		Front	SUV RWD 651916	5AT;6MT;7AT	Flexible Coupling Kit	537794S
	2013.12-2015.06		Front;Rear	SUV RWD 651916		Flexible Coupling Kit	512677S
2.2 (105 kw)	2010.07-2015.06		Front;Rear	SUV RWD 651913/651916	5AT;6MT;7AT	Flexible Coupling	512677
	2010.07-2015.06		Front	SUV RWD 651913/651916	5AT;6MT;7AT	Flexible Coupling Kit	537794S
	2010.07-2015.06		Front;Rear	SUV RWD 651913/651916		Flexible Coupling Kit	512677S
GLK220							
2.2 (120 kw)	2008.06-2015.06	7AT	Front	SUV 4WD 651912	Model code:204984	Propshaft	PS901588
	2008.06-2015.06	7AT	Front	SUV 4WD 651912	Model code:204984	Propshaft	PS901589
	2008.06-2015.06	7AT	Rear	SUV 4WD 651912		Propshaft	PS901721
	2008.06-2015.06		Front;Rear	SUV RWD 651916	5AT;6MT;7AT	Flexible Coupling	512677
	2008.06-2015.06		Front;Rear	SUV 4WD 651912		Flexible Coupling	512678
	2008.06-2015.06		Front	SUV RWD 651916	5AT;6MT;7AT	Flexible Coupling Kit	537794S
	2008.06-2015.06		Front;Rear	SUV 4WD 651912		Flexible Coupling Kit	512673S
	2008.06-2015.06		Front;Rear	SUV RWD 651916		Flexible Coupling Kit	512677S
2.2 (125 kw)	2008.06-2015.06	7AT	Front	SUV 4WD 651912	Model code:204984	Propshaft	PS901588
	2008.06-2015.06	AT	Front	SUV 4WD 651912	Model code:204984	Propshaft	PS901589
	2008.06-2015.06	7AT	Rear	SUV 4WD 651912		Propshaft	PS901721
	2008.06-2015.06		Front;Rear	SUV RWD 651916	5AT;6MT;7AT	Flexible Coupling	512677
	2008.06-2015.06		Front;Rear	SUV 4WD 651912		Flexible Coupling	512678
	2008.06-2015.06		Front	SUV RWD 651916	5AT;6MT;7AT	Flexible Coupling Kit	537794S
	2008.06-2015.06		Front;Rear	SUV 4WD 651912		Flexible Coupling Kit	512673S
	2008.06-2015.06		Front;Rear	SUV RWD 651916		Flexible Coupling Kit	512677S
GLK250							
2.0 (155 kw)	2013.04-2015.06	MT	Rear	SUV 4WD 274920		Propshaft	PS901477
	2013.04-2015.06		Front;Rear	SUV 4WD 274920		Flexible Coupling	512678
	2013.04-2015.06		Front;Rear	SUV 4WD 274920		Flexible Coupling Kit	512673S
	2013.08-2015.06		Front;Rear	SUV RWD 274920		Flexible Coupling	512678
	2013.08-2015.06		Front;Rear	SUV RWD 274920		Flexible Coupling Kit	512673S
2.2 (149 kw)	2012.09-2015.06		Front;Rear	SUV 4WD OM 651.912		Flexible Coupling Kit	512673S
2.2 (150 kw)	2009.09-2015.06	7AT	Front	SUV 4WD 651912	Model code:204982	Propshaft	PS901588
	2009.09-2015.06	AT	Front	SUV 4WD 651912	Model code:204982	Propshaft	PS901589
	2009.09-2015.06	7AT	Rear	SUV 4WD 651912		Propshaft	PS901721
	2009.09-2015.06		Front;Rear	SUV 4WD 651912		Flexible Coupling	512678
	2009.09-2015.06		Front;Rear	SUV 4WD 651912		Flexible Coupling Kit	512673S
GLK280							
3.0 (170 kw)	2008.06-2009.06	7AT	Front	SUV 4WD M272948	Model year to:2012	Propshaft	PS900359
	2008.06-2009.06	7AT	Rear	SUV 4WD M272948		Propshaft	PS901721
	2008.06-2009.06		Front;Rear	SUV 4WD M272948		Flexible Coupling	512678
	2008.06-2009.06		Front;Rear	SUV 4WD M272948		Flexible Coupling Kit	512673S
GLK300							
3.0 (170 kw)	2009.07-2015.12	7AT	Front	SUV 4WD M272948	Model year to:2012	Propshaft	PS900359
	2009.07-2015.12	7AT	Rear	SUV 4WD M272948		Propshaft	PS901721
	2009.07-2015.12		Front;Rear	SUV 4WD M272948		Flexible Coupling	512678
	2009.07-2015.12		Front;Rear	SUV 4WD M272948		Flexible Coupling Kit	512673S
3.5 (182 kw)	2009.09-2015.12	7AT	Rear	SUV 4WD 276957		Propshaft	PS901721
3.5 (185 kw)	2009.09-2015.06	7AT	Rear	SUV 4WD 276957		Propshaft	PS901721
	2009.09-2015.06		Front;Rear	SUV 4WD 276957		Flexible Coupling	512678
	2009.09-2015.06		Front;Rear	SUV 4WD 276957		Flexible Coupling Kit	512673S
GLK320							
3.0 (165 kw)	2008.06-2015.06		Front;Rear	SUV 4WD 642961		Flexible Coupling	512678
	2008.06-2015.06		Front;Rear	SUV 4WD 642961		Flexible Coupling Kit	512673S
GLK350							
3.0 (165 kw)	2009.07-2010.01		Front;Rear	SUV 4WD 642832		Flexible Coupling	512678
	2009.07-2010.01		Front;Rear	SUV 4WD 642832		Flexible Coupling Kit	512673S
3.0 (170 kw)	2010.02-2015.06		Front;Rear	SUV 4WD 642832		Flexible Coupling	512678
	2010.02-2015.06		Front;Rear	SUV 4WD 642832		Flexible Coupling Kit	512673S

	YEAR	TRANSM.	FITTING POSITION	BODY STYLE & DRIVE TYPE & ENGINE	REMARKS	PRODUCT	GSP Ref.
MERCEDES-BENZ							
GLK350							
3.0 (195 kw)	2012.07-2015.06	7AT	Front	SUV 4WD 642835		Propshaft	PS901588
	2012.07-2015.06		Front;Rear	SUV 4WD 642835	7AT	Flexible Coupling	512677
	2012.07-2015.06		Front;Rear	SUV 4WD 642835		Flexible Coupling Kit	512677S
	2012.07-2015.06		Front;Rear	SUV 4WD 642835	7AT	Flexible Coupling Kit	537794S
3.5 (200 kw)	2008.06-2011.04	7AT	Front	SUV 4WD 272971		Propshaft	PS900359
	2008.06-2011.04	7AT	Rear	SUV 4WD 272971		Propshaft	PS901721
	2008.06-2011.04		Front;Rear	SUV 4WD 272971	7AT,Inner diameter:57.5mm	Flexible Coupling	512677
	2008.06-2011.04		Front;Rear	SUV 4WD 272971	Inner diameter:49.5mm	Flexible Coupling	512678
	2008.06-2011.04		Front;Rear	SUV 4WD 272971		Flexible Coupling Kit	512673S
	2008.06-2011.04		Front;Rear	SUV 4WD 272971	7AT	Flexible Coupling Kit	537794S
	2009.04-2015.06		Front;Rear	SUV RWD 272991	7AT	Flexible Coupling	512677
	2009.04-2015.06		Front;Rear	SUV RWD 272991		Flexible Coupling Kit	512677S
	2009.04-2015.06		Front;Rear	SUV RWD 272991	7AT	Flexible Coupling Kit	537794S
3.5 (225 kw)	2008.06-2015.06	7AT	Rear	SUV 4WD 276957		Propshaft	PS901721
	2008.06-2015.06		Front;Rear	SUV 4WD 276957		Flexible Coupling	512678
	2008.06-2015.06		Front;Rear	SUV 4WD 276957		Flexible Coupling Kit	512673S
	2012.09-2015.06		Front;Rear	SUV RWD M 276.957		Flexible Coupling Kit	512673S
	2012.09-2015.06		Front;Rear	SUV RWD M 276.957		Flexible Coupling Kit	512677S
GLS350							
2.9 (210 kw)	2019.04-		Rear	SUV 4WD 656929		Flexible Coupling	537851
3.0 (183 kw)	2017.01-2019.04	AT	Front	SUV 4WD 642826		Propshaft	PS900586
3.0 (190 kw)	2015.11-2019.04	AT	Front	SUV 4WD 642826		Propshaft	PS900586
	2015.11-2019.04		Front;Rear	SUV 4WD 642826		Flexible Coupling	512677
	2015.11-2019.04		Front;Rear	SUV 4WD 642826		Flexible Coupling Kit	537630S
GLS400							
2.9 (243 kw)	2019.04-		Rear	SUV 4WD 656929		Flexible Coupling	537851
3.0 (245 kw)	2015.11-2019.04		Front;Rear	SUV 4WD 276821		Flexible Coupling	512677
	2015.11-2019.04		Front;Rear	SUV 4WD 276821		Flexible Coupling Kit	512673S
GLS450							
3.0 (270 kw)	2016.06-2019.04		Front;Rear	SUV 4WD M 276.821		Flexible Coupling Kit	537630S
GLS500							
4.0 (310 kw)	2016.03-2019.04		Front;Rear	SUV 4WD M 278.912		Flexible Coupling Kit	537630S
4.7 (335 kw)	2015.11-2019.04		Front;Rear	SUV 4WD 278928		Flexible Coupling	512677
	2015.11-2019.04		Front;Rear	SUV 4WD 278928		Flexible Coupling Kit	537630S
GLS580							
4.0 (360 kw)	2019.11-		Rear	SUV 4WD 176980		Flexible Coupling	537851
GLS63 AMG							
5.5 (430 kw)	2015.11-2019.04		Front;Rear	SUV 4WD 157982		Flexible Coupling Kit	512673S
ML230							
2.3 (110 kw)	1998.04-2000.08	MT	Front	SUV 4WD 111977	Date to:2000.09	Propshaft	PS900353
	1998.04-2000.08	MT	Rear	SUV 4WD 111977		Propshaft	PS901476
	1998.04-2000.08	MT	Front	SUV 4WD 111977	Date to:2000.09	Joint,propshaft	699253
	1998.04-2000.08		Centre	SUV 4WD 111977		Center Bearing Support Kit	539002S
ML250							
2.2 (150 kw)	2011.06-2015.02	AT	Front	SUV 4WD 651960	For Model year:2015	Propshaft	PS900345
	2011.06-2015.02		Front;Rear	SUV 4WD 651960		Flexible Coupling	512677
	2011.06-2015.02		Rear	SUV 4WD 651960		Flexible Coupling Kit	537792S
	2011.06-2015.02		Front;Rear	SUV 4WD 651960		Flexible Coupling Kit	512673S
ML270							
2.7 (120 kw)	1999.06-2005.07	MT	Front	SUV 4WD 612963		Propshaft	PS900355
	1999.06-2005.07	AT	Rear	SUV 4WD 612963	for OE No.:A1634101202	Propshaft	PS901474
	1999.06-2005.07	AT	Rear	SUV 4WD 612963	for OE No.:A1634100802	Propshaft	PS901475
	1999.06-2005.07	MT	Front	SUV 4WD 612963		Joint,propshaft	699253
	1999.06-2005.07		Centre	SUV 4WD 612963		Center Bearing Support Kit	539002S
ML280							
3.0 (140 kw)	2005.07-2009.07	AT	Front	SUV 4WD 642940		Joint,propshaft	699219
	2005.07-2009.07		Centre	SUV 4WD 642940		Center Bearing Support	539918
	2005.07-2009.07		Front;Rear	SUV 4WD 642940		Flexible Coupling	512677
	2005.07-2009.07		Rear	SUV 4WD 642940		Flexible Coupling Kit	537792S
	2005.07-2009.07		Front;Rear	SUV 4WD 642940		Flexible Coupling Kit	512673S
ML300							
3.0 (140 kw)	2009.06-2011.12	AT	Front	SUV 4WD 642940		Joint,propshaft	699219
	2009.06-2011.12		Centre	SUV 4WD 642940		Center Bearing Support	539918
	2009.06-2011.12		Front;Rear	SUV 4WD 642940		Flexible Coupling	512677

	YEAR	TRANSM.	FITTING POSITION	BODY STYLE & DRIVE TYPE & ENGINE	REMARKS	PRODUCT	GSP Ref.
MERCEDES-BENZ							
ML300							
3.0 (140 kw)	2009.06-2011.12		Rear	SUV 4WD 642940		Flexible Coupling Kit	537792S
	2009.06-2011.12		Front;Rear	SUV 4WD 642940		Flexible Coupling Kit	512673S
3.0 (150 kw)	2009.06-2011.12	AT	Front	SUV 4WD 642820		Joint,propshaft	699219
	2009.06-2011.12		Front;Rear	SUV 4WD 642820		Flexible Coupling	512677
	2009.06-2011.12		Front	SUV 4WD 642820		Flexible Coupling Kit	510578S
	2009.06-2011.12		Rear	SUV 4WD 642820		Flexible Coupling Kit	537792S
	2009.06-2011.12		Front;Rear	SUV 4WD 642820		Flexible Coupling Kit	512673S
3.5 (185 kw)	2012.08-2015.02		Front;Rear	SUV 4WD 276955		Flexible Coupling	512677
	2012.08-2015.02		Rear	SUV 4WD 276955		Flexible Coupling Kit	537792S
	2012.08-2015.02		Front;Rear	SUV 4WD 276955		Flexible Coupling Kit	512673S
ML320							
3.0 (155 kw)	2005.07-2011.07	AT	Front	SUV 4WD 642820/642940	Model year from:2007,Model year to:2009	Propshaft	201958
	2005.07-2011.07	7AT	Rear	SUV 4WD 642820/642940	Model year from:2007,Model year to:2008;for OE No.:1644103102	Propshaft	PS900363
	2005.07-2011.07		Centre	SUV 4WD 642820/642940		Center Bearing Support	539918
	2005.07-2011.07		Front;Rear	SUV 4WD 642820/642940		Flexible Coupling Kit	512673S
3.0 (160 kw)	2006.09-2008.12	7AT	Rear	SUV 4WD OM 642.940	Model year from:2007	Propshaft	PS900363
3.0 (165 kw)	2005.07-2011.07	AT	Front	SUV 4WD 642940	Model year from:2007,Model year to:2009	Propshaft	201958
	2005.07-2011.07	7AT	Rear	SUV 4WD 642940	Model year from:2007,Model year to:2008;for OE No.:1644103102	Propshaft	PS900363
	2005.07-2011.07	AT	Front	SUV 4WD 642940		Joint,propshaft	699219
	2005.07-2011.07		Centre	SUV 4WD 642940		Center Bearing Support	539918
	2005.07-2011.07		Front;Rear	SUV 4WD 642940		Flexible Coupling	512677
	2005.07-2011.07		Rear	SUV 4WD 642940		Flexible Coupling Kit	537792S
	2005.07-2011.07		Front;Rear	SUV 4WD 642940		Flexible Coupling Kit	512673S
3.0 (200 kw)	2013.11-2015.02		Front;Rear	SUV 4WD M 276.821		Flexible Coupling Kit	512673S
3.2 (160 kw)	1998.02-2003.04	5AT	Front	SUV 4WD 112942		Propshaft	PS900352
	1998.02-2003.04	5AT	Rear	SUV 4WD 112942		Propshaft	PS900544
	1998.02-2003.04	5AT	Front	SUV 4WD 112942		Joint,propshaft	699253
	1998.02-2003.04		Centre	SUV 4WD 112942		Center Bearing Support Kit	539002S
ML350							
3.0 (155 kw)	2009.09-2012.06	AT	Front	SUV 4WD 642820		Joint,propshaft	699219
	2009.09-2012.06		Front;Rear	SUV 4WD 642820		Flexible Coupling	512677
	2009.09-2012.06		Rear	SUV 4WD 642820		Flexible Coupling Kit	537792S
	2009.09-2012.06		Front;Rear	SUV 4WD 642820		Flexible Coupling Kit	512673S
3.0 (165 kw)	2009.06-2012.11	AT	Front	SUV 4WD 642940		Joint,propshaft	699219
	2009.06-2012.11		Front;Rear	SUV 4WD 642940		Flexible Coupling	512677
	2009.06-2012.11		Rear	SUV 4WD 642940		Flexible Coupling Kit	537792S
	2009.06-2012.11		Front;Rear	SUV 4WD 642940		Flexible Coupling Kit	512673S
3.0 (170 kw)	2009.06-2011.12	AT	Front	SUV 4WD 642820		Propshaft	201958
	2009.06-2011.12	AT	Front	SUV 4WD 642820		Joint,propshaft	699219
	2009.06-2011.12		Front;Rear	SUV 4WD 642820		Flexible Coupling	512677
	2009.06-2011.12		Rear	SUV 4WD 642820		Flexible Coupling Kit	537792S
	2009.06-2011.12		Front;Rear	SUV 4WD 642820		Flexible Coupling Kit	512673S
3.0 (190 kw)	2011.06-2015.02	AT	Front	SUV 4WD 642826		Propshaft	PS900586
	2011.06-2015.02	7AT	Rear	SUV 4WD 642826	For Model year:2011;for OE No.:1644103102	Propshaft	PS900363
	2011.06-2015.02	AT	Rear	SUV 4WD 642826	for OE No.:A1664105900	Propshaft	PS900622
	2011.06-2015.02	AT	Rear	SUV 4WD 642826		Joint,propshaft	605168
	2011.06-2015.02		Front;Rear	SUV 4WD 642826		Flexible Coupling	512677
	2011.06-2015.02		Rear	SUV 4WD 642826		Flexible Coupling Kit	537792S
3.5 (200 kw)	2005.02-2011.12	AT	Front	SUV 4WD 272967	Model year from:2006,Model year to:2010	Propshaft	201958
	2005.02-2011.12	7AT	Rear	SUV 4WD 272967	Model year from:2006;for OE No.:1644103102	Propshaft	PS900363
	2005.02-2011.12	AT	Front	SUV 4WD 272967		Joint,propshaft	699219
	2005.02-2011.12		Centre	SUV 4WD 272967		Center Bearing Support	539918
	2005.02-2011.12		Front;Rear	SUV 4WD 272967		Flexible Coupling	512677
	2005.02-2011.12		Rear	SUV 4WD 272967		Flexible Coupling Kit	537792S
	2005.02-2011.12		Front;Rear	SUV 4WD 272967		Flexible Coupling Kit	512673S
	2009.01-2011.12		Rear	SUV RWD M 272.967		Flexible Coupling Kit	537792S
3.5 (225 kw)	2011.06-2015.02		Front;Rear	SUV 4WD 276955		Flexible Coupling	512677
	2011.06-2015.02		Rear	SUV 4WD 276955		Flexible Coupling Kit	537792S
	2011.06-2015.02		Front;Rear	SUV 4WD 276955		Flexible Coupling Kit	512673S
3.7 (173 kw)	2003.01-2005.12	5AT	Rear	SUV 4WD 112970		Propshaft	PS900544
	2003.01-2005.12		Centre	SUV 4WD 112970		Center Bearing Support Kit	539002S
3.7 (180 kw)	2002.08-2003.07	5AT	Front	SUV 4WD 112970	Model year from:2003	Propshaft	PS900352
	2002.08-2003.07	5AT	Rear	SUV 4WD 112970		Propshaft	PS900544
	2002.08-2003.07	5AT	Front	SUV 4WD 112970	Model year from:2003	Joint,propshaft	699253

	YEAR	TRANSM.	FITTING POSITION	BODY STYLE & DRIVE TYPE & ENGINE	REMARKS	PRODUCT	GSP Ref.
MERCEDES-BENZ							
ML350							
3.7 (180 kw)	2002.08-2003.07		Centre	SUV 4WD 112970		Center Bearing Support Kit	539002S
ML400							
3.0 (245 kw)	2013.08-2015.02	AT	Front	SUV 4WD 276821/276825	For Model year:2015	Propshaft	PS900345
	2013.08-2015.02		Front;Rear	SUV 4WD 276821/276825		Flexible Coupling	512677
	2013.08-2015.02		Rear	SUV 4WD 276821/276825		Flexible Coupling Kit	537792S
4.0 (184 kw)	2001.09-2005.07	AT	Rear	SUV 4WD 628963		Propshaft	PS901474
	2001.09-2005.07		Centre	SUV 4WD 628963		Center Bearing Support Kit	539002S
ML420							
4.0 (225 kw)	2006.02-2009.09	AT	Front	SUV 4WD 629912		Joint,propshaft	699219
	2006.02-2009.09		Centre	SUV 4WD 629912		Center Bearing Support	539918
	2006.02-2009.09		Front;Rear	SUV 4WD 629912		Flexible Coupling	512677
	2006.02-2009.09		Rear	SUV 4WD 629912		Flexible Coupling Kit	537792S
	2006.02-2009.09		Front;Rear	SUV 4WD 629912		Flexible Coupling Kit	512673S
ML430							
4.3 (200 kw)	1998.11-2002.08	AT	Front	SUV 4WD 113942	Model year from:1999,Model year to:2001	Propshaft	PS900354
	1998.11-2002.08	AT	Rear	SUV 4WD 113942		Propshaft	PS901474
	1998.11-2002.08	AT	Front	SUV 4WD 113942	Model year from:1999,Model year to:2001	Joint,propshaft	699253
	1998.11-2002.08		Centre	SUV 4WD 113942		Center Bearing Support Kit	539002S
ML450							
4.0 (225 kw)	2009.06-2011.12	AT	Front	SUV 4WD 629912		Joint,propshaft	699219
	2009.06-2011.12		Centre	SUV 4WD 629912		Center Bearing Support	539918
	2009.06-2011.12		Front;Rear	SUV 4WD 629912		Flexible Coupling	512677
	2009.06-2011.12		Rear	SUV 4WD 629912		Flexible Coupling Kit	537792S
	2009.06-2011.12		Front;Rear	SUV 4WD 629912		Flexible Coupling Kit	512673S
ML500							
4.7 (300 kw)	2012.02-2015.02		Rear	SUV 4WD 278928		Flexible Coupling	537630
	2012.02-2015.02		Front;Rear	SUV 4WD 278928		Flexible Coupling	512677
	2012.02-2015.02		Rear	SUV 4WD 278928	9AT;537630S and 537792S different structure	Flexible Coupling Kit	537630S
	2012.02-2015.02		Rear	SUV 4WD 278928	537792S and 537630S different structure	Flexible Coupling Kit	537792S
	2012.02-2015.02		Front;Rear	SUV 4WD 278928		Flexible Coupling Kit	512673S
5.0 (215 kw)	2001.09-2005.06	5AT	Front	SUV 4WD 113965	Model year from:2002	Propshaft	PS900354
	2001.09-2005.06	AT	Rear	SUV 4WD 113965		Propshaft	PS901474
	2001.09-2005.06	5AT	Front	SUV 4WD 113965	Model year from:2002	Joint,propshaft	699253
	2001.09-2005.06		Centre	SUV 4WD 113965		Center Bearing Support Kit	539002S
5.0 (225 kw)	2005.08-2007.12	AT	Front	SUV 4WD 113964	Model year from:2006,Model year to:2007	Propshaft	201958
	2005.08-2007.12	AT	Front	SUV 4WD 113964		Joint,propshaft	699219
	2005.08-2007.12		Front;Rear	SUV 4WD 113964		Flexible Coupling	512677
	2005.08-2007.12		Rear	SUV 4WD 113964		Flexible Coupling Kit	537792S
	2005.08-2007.12		Front;Rear	SUV 4WD 113964		Flexible Coupling Kit	512673S
5.5 (285 kw)	2007.04-2012.06	AT	Front	SUV 4WD 273963		Joint,propshaft	699219
	2007.04-2012.06		Front;Rear	SUV 4WD 273963		Flexible Coupling	512677
	2007.04-2012.06		Rear	SUV 4WD 273963		Flexible Coupling Kit	537792S
	2007.04-2012.06		Front;Rear	SUV 4WD 273963		Flexible Coupling Kit	512673S
ML55 AMG							
5.4 (255 kw)	1999.06-2005.07	5AT	Front	SUV 4WD 113981	Model year to:2003	Propshaft	PS900354
	1999.06-2005.07	AT	Rear	SUV 4WD 113981		Propshaft	PS901474
	1999.06-2005.07	5AT	Front	SUV 4WD 113981	Model year to:2003	Joint,propshaft	699253
	1999.06-2005.07		Centre	SUV 4WD 113981		Center Bearing Support Kit	539002S
ML550							
4.7 (300 kw)	2012.01-2015.02		Rear	SUV 4WD 278928		Flexible Coupling	537630
	2012.01-2015.02		Front;Rear	SUV 4WD 278928		Flexible Coupling	512677
	2012.01-2015.02		Rear	SUV 4WD 278928	9AT;537630S and 537792S different structure	Flexible Coupling Kit	537630S
	2012.01-2015.02		Rear	SUV 4WD 278928	537792S and 537630S different structure	Flexible Coupling Kit	537792S
	2012.01-2015.02		Front;Rear	SUV 4WD 278928		Flexible Coupling Kit	512673S
ML63 AMG							
5.5 (386 kw)	2011.11-2015.02		Front;Rear	SUV 4WD 157982		Flexible Coupling	512677
	2011.11-2015.02		Rear	SUV 4WD 157982		Flexible Coupling Kit	537792S
	2011.11-2015.02		Front;Rear	SUV 4WD 157982		Flexible Coupling Kit	512673S
5.5 (410 kw)	2011.11-2015.02		Front;Rear	SUV 4WD 157982		Flexible Coupling	512677
	2011.11-2015.02		Rear	SUV 4WD 157982		Flexible Coupling Kit	537792S
	2011.11-2015.02		Front;Rear	SUV 4WD 157982		Flexible Coupling Kit	512673S
6.2 (375 kw)	2005.12-2011.12	AT	Front	SUV 4WD 156980		Propshaft	PS900607
	2005.12-2011.12	AT	Front	SUV 4WD 156980		Joint,propshaft	699219
	2005.12-2011.12		Front;Rear	SUV 4WD 156980		Flexible Coupling	512677

	YEAR	TRANSM.	FITTING POSITION	BODY STYLE & DRIVE TYPE & ENGINE	REMARKS	PRODUCT	GSP Ref.
MERCEDES-BENZ							
ML63 AMG							
6.2 (375 kw)	2005.12-2011.12		Rear	SUV 4WD 156980		Flexible Coupling Kit	537792S
	2005.12-2011.12		Front;Rear	SUV 4WD 156980		Flexible Coupling Kit	512673S
O 810 Vario							
4.3 (75 kw)	1996.09-2010.12		Front;Rear	Bus RWD OM 904.904		Center Bearing Support	538660
R280							
3.0 (140 kw)	2006.05-2012.12	AT	Front	MPV 4WD 642950		Propshaft	PS900607
	2006.05-2012.12		Front;Rear	MPV 4WD 642950		Flexible Coupling	512677
	2006.05-2012.12		Front;Rear	MPV RWD 642870/642950		Flexible Coupling	512677
	2006.05-2012.12		Front	MPV RWD 642870/642950		Flexible Coupling Kit	510578S
	2006.05-2012.12		Rear	MPV 4WD 642950		Flexible Coupling Kit	537792S
	2006.05-2012.12		Rear	MPV RWD 642870/642950		Flexible Coupling Kit	537792S
	2006.05-2012.12		Front;Rear	MPV 4WD 642950		Flexible Coupling Kit	512673S
	2006.05-2012.12		Front;Rear	MPV RWD 642870/642950		Flexible Coupling Kit	512673S
3.0 (170 kw)	2006.06-2014.12		Front;Rear	MPV RWD 272945		Flexible Coupling	512677
	2006.06-2014.12		Rear	MPV RWD 272945		Flexible Coupling Kit	537792S
	2006.06-2014.12		Front;Rear	MPV RWD 272945		Flexible Coupling Kit	512673S
	2007.05-2011.12	AT	Front	MPV 4WD 272945		Propshaft	PS900607
R300							
3.0 (140 kw)	2009.07-2012.12	AT	Front	MPV 4WD 642950		Propshaft	PS900607
	2009.07-2012.12		Front;Rear	MPV 4WD 642950		Flexible Coupling	512677
	2009.07-2012.12		Front;Rear	MPV RWD 642870/642872/642950		Flexible Coupling	512677
	2009.07-2012.12		Front	MPV RWD 642870/642872/642950		Flexible Coupling Kit	510578S
	2009.07-2012.12		Rear	MPV 4WD 642950		Flexible Coupling Kit	537792S
	2009.07-2012.12		Rear	MPV RWD 642870/642872/642950		Flexible Coupling Kit	537792S
	2009.07-2012.12		Front;Rear	MPV 4WD 642950		Flexible Coupling Kit	512673S
	2009.07-2012.12		Front;Rear	MPV RWD 642870/642872/642950		Flexible Coupling Kit	512673S
3.0 (170 kw)	2009.07-2011.12	AT	Front	MPV 4WD 272945		Propshaft	PS900607
	2009.07-2011.12		Rear	MPV 4WD 272945		Flexible Coupling Kit	537792S
	2009.07-2011.12		Front;Rear	MPV 4WD 272945		Flexible Coupling Kit	512673S
	2009.07-2014.12		Front;Rear	MPV RWD 272945		Flexible Coupling	512677
	2009.07-2014.12		Rear	MPV RWD 272945		Flexible Coupling Kit	537792S
	2009.07-2014.12		Front;Rear	MPV RWD 272945		Flexible Coupling Kit	512673S
R320							
3.0 (155 kw)	2006.01-2012.12	AT	Front	MPV 4WD 642870	Model year from:2007,Model year to:2009;for OE No.:A1644100701	Propshaft	201958
	2006.01-2012.12	AT	Front	MPV 4WD 642870	for OE No.:A2514100701	Propshaft	PS900607
	2006.01-2012.12		Front;Rear	MPV 4WD 642870		Flexible Coupling	512677
	2006.01-2012.12		Rear	MPV 4WD 642870		Flexible Coupling Kit	537792S
	2006.01-2012.12		Front;Rear	MPV 4WD 642870		Flexible Coupling Kit	512673S
3.0 (165 kw)	2006.01-2010.07	AT	Front	MPV 4WD 642870/642950	Model year from:2007,Model year to:2009;for OE No.:A1644100701	Propshaft	201958
	2006.01-2010.07	AT	Front	MPV 4WD 642870/642950	for OE No.:A2514100701	Propshaft	PS900607
	2006.01-2010.07	7AT	Rear	MPV 4WD 642870/642950	For Modelcode:251122	Propshaft	PS901904
	2006.01-2010.07		Front;Rear	MPV 4WD 642870/642950		Flexible Coupling	512677
	2006.01-2010.07		Rear	MPV 4WD 642870/642950		Flexible Coupling Kit	537792S
	2006.01-2010.07		Front;Rear	MPV 4WD 642870/642950		Flexible Coupling Kit	512673S
R350							
3.0 (155 kw)	2006.01-2014.12	AT	Front	MPV 4WD 642870	Model year from:2010,Model year to:2012;for OE No.:A1644100701	Propshaft	201958
	2006.01-2014.12	AT	Front	MPV 4WD 642870	for OE No.:A2514100701	Propshaft	PS900607
	2006.01-2014.12		Front;Rear	MPV 4WD 642870		Flexible Coupling	512677
	2006.01-2014.12		Rear	MPV 4WD 642870		Flexible Coupling Kit	537792S
	2006.01-2014.12		Front;Rear	MPV 4WD 642870		Flexible Coupling Kit	512673S
3.0 (165 kw)	2009.07-2012.12	AT	Front	MPV 4WD 642950	Model year from:2010;for OE No.:A1644100701	Propshaft	201958
	2009.07-2012.12	AT	Front	MPV 4WD 642950	for OE No.:A2514100701	Propshaft	PS900607
	2009.07-2012.12	7AT	Rear	MPV 4WD 642950	For Modelcode:251122	Propshaft	PS901904
	2009.07-2012.12		Front;Rear	MPV 4WD 642950		Flexible Coupling	512677
	2009.07-2012.12		Rear	MPV 4WD 642950		Flexible Coupling Kit	537792S
	2009.07-2012.12		Front;Rear	MPV 4WD 642950		Flexible Coupling Kit	512673S
3.0 (195 kw)	2010.01-2014.12	AT	Front	MPV 4WD 642872	Model year to:2012	Propshaft	201958
	2010.01-2014.12		Front;Rear	MPV 4WD 642872		Flexible Coupling	512677
	2010.01-2014.12		Rear	MPV 4WD 642872		Flexible Coupling Kit	537792S
	2010.01-2014.12		Front;Rear	MPV 4WD 642872		Flexible Coupling Kit	512673S
3.5 (200 kw)	2005.08-2012.12	AT	Front	MPV 4WD 272967	for OE No.:A1644100701	Propshaft	201958
	2005.08-2012.12	AT	Front	MPV 4WD 272967	for OE No.:A2514100701	Propshaft	PS900607
	2005.08-2012.12	7AT	Rear	MPV 4WD 272967	For Modelcode:251165	Propshaft	PS901904
	2005.08-2012.12		Front;Rear	MPV 4WD 272967		Flexible Coupling	512677

	YEAR	TRANSM.	FITTING POSITION	BODY STYLE & DRIVE TYPE & ENGINE	REMARKS	PRODUCT	GSP Ref.
MERCEDES-BENZ							
R350							
3.5 (200 kw)	2005.08-2012.12		Rear	MPV 4WD 272967		Flexible Coupling Kit	537792S
	2005.08-2012.12		Front;Rear	MPV 4WD 272967		Flexible Coupling Kit	512673S
	2007.01-2012.12		Front;Rear	MPV RWD 272967		Flexible Coupling	512677
	2007.01-2012.12		Rear	MPV RWD 272967		Flexible Coupling Kit	537792S
	2007.01-2012.12		Front;Rear	MPV RWD 272967		Flexible Coupling Kit	512673S
3.5 (225 kw)	2011.10-2014.12	AT	Front	MPV 4WD 276958		Propshaft	PS900607
	2011.10-2014.12		Front;Rear	MPV 4WD 276958		Flexible Coupling	512677
	2011.10-2014.12		Rear	MPV 4WD 276958		Flexible Coupling Kit	537792S
	2011.10-2014.12		Front;Rear	MPV 4WD 276958		Flexible Coupling Kit	512673S
R500							
5.0 (225 kw)	2005.08-2014.12	AT	Front	MPV 4WD 113971	Model year to:2007;for OE No.:A1644100701	Propshaft	201958
	2005.08-2014.12	AT	Front	MPV 4WD 113971	for OE No.:A2514100701	Propshaft	PS900607
	2005.08-2014.12	7AT	Rear	MPV 4WD 113971	For Modelcode:251175	Propshaft	PS901904
	2005.08-2014.12		Front;Rear	MPV 4WD 113971		Flexible Coupling	512677
	2005.08-2014.12		Rear	MPV 4WD 113971		Flexible Coupling Kit	537792S
	2005.08-2014.12		Front;Rear	MPV 4WD 113971		Flexible Coupling Kit	512673S
5.5 (285 kw)	2007.05-2014.12	AT	Front	MPV 4WD 273963		Propshaft	PS900607
	2007.05-2014.12		Front;Rear	MPV 4WD 273963		Flexible Coupling	512677
	2007.05-2014.12		Rear	MPV 4WD 273963		Flexible Coupling Kit	537792S
	2007.05-2014.12		Front;Rear	MPV 4WD 273963		Flexible Coupling Kit	512673S
R63 AMG							
6.2 (375 kw)	2006.02-2010.12	AT	Front	MPV 4WD 156980		Propshaft	PS900607
	2006.02-2010.12		Front;Rear	MPV 4WD 156980		Flexible Coupling	512677
	2006.02-2010.12		Rear	MPV 4WD 156980		Flexible Coupling Kit	537792S
	2006.02-2010.12		Front;Rear	MPV 4WD 156980		Flexible Coupling Kit	512673S
S280							
2.8 (142 kw)	1993.06-1999.01		Front	Saloon RWD 104944		Flexible Coupling	510571
	1993.06-1999.01		Front;Rear	Saloon RWD 104944		Flexible Coupling	510579
	1993.06-1999.01		Front	Saloon RWD 104944		Flexible Coupling Kit	510571S
	1993.06-1999.01		Front	Saloon RWD 104944		Flexible Coupling Kit	510580S
2.8 (150 kw)	1999.02-2005.08		Centre	Saloon RWD 112922	Height:57.7mm	Center Bearing Support	538667
	1999.02-2005.08		Front	Saloon RWD 112922		Flexible Coupling	510571
	1999.02-2005.08		Rear	Saloon RWD 112922		Flexible Coupling	512678
	1999.02-2005.08		Front	Saloon RWD 112922		Flexible Coupling Kit	510571S
	1999.02-2005.08		Front;Rear	Saloon RWD 112922		Flexible Coupling Kit	512673S
3.0 (170 kw)	2006.08-2013.07		Front;Rear	Saloon RWD 272946		Flexible Coupling	512678
	2006.08-2013.07		Front;Rear	Saloon RWD 272946		Flexible Coupling Kit	512673S
S300							
2.2 (170 kw)	2014.02-2017.05		Rear	Saloon RWD 651921	7AT	Flexible Coupling	537843
	2014.02-2017.05		Front;Rear	Saloon RWD 651921	7AT	Flexible Coupling	533884
	2014.02-2017.05		Front	Saloon RWD 651921		Flexible Coupling Kit	538509S
	2014.02-2017.05		Front;Rear	Saloon RWD 651921		Flexible Coupling Kit	537832S
3.0 (130 kw)	1996.09-1998.08		Front	Saloon RWD 606961		Flexible Coupling	512672
	1996.09-1998.08		Front;Rear	Saloon RWD 606961		Flexible Coupling	512677
	1996.09-1998.08		Rear	Saloon RWD 606961	512672S and 537889S different accessory	Flexible Coupling Kit	512672S
	1996.09-1998.08		Rear	Saloon RWD 606961	537889S and 512672S different accessory	Flexible Coupling Kit	537889S
	1996.09-1998.08		Front;Rear	Saloon RWD 606961		Flexible Coupling Kit	512677S
3.0 (170 kw)	2006.01-2013.07	MT	Rear	Saloon RWD 272946		Propshaft	PS901472
	2006.01-2013.07		Front;Rear	Saloon RWD 272946		Flexible Coupling	512678
	2006.01-2013.07		Front;Rear	Saloon RWD 272946		Flexible Coupling Kit	512673S
3.0 (180 kw)	2012.04-2013.12	MT	Rear	Saloon RWD M 272.946		Propshaft	PS901472
	2012.04-2013.12		Front;Rear	Saloon RWD M 272.946		Flexible Coupling Kit	512673S
S320							
2.0 (220 kw)	2018.08-2020.07		Front;Rear	Saloon RWD M 264.920		Flexible Coupling Kit	537630S
3.0 (155 kw)	2005.10-2012.12		Front;Rear	Saloon RWD 642930		Flexible Coupling	533884
	2005.10-2012.12		Front;Rear	Saloon RWD 642930		Flexible Coupling Kit	537832S
	2006.06-2010.12		Front;Rear	Saloon 4WD 642932		Flexible Coupling	512678
	2006.06-2010.12		Front;Rear	Saloon 4WD 642932		Flexible Coupling Kit	512673S
3.0 (173 kw)	2005.12-2009.06		Centre	Saloon RWD 642930		Center Bearing Support	539005
	2005.12-2009.06		Front;Rear	Saloon RWD 642930		Flexible Coupling	533884
	2005.12-2009.06		Front;Rear	Saloon RWD 642930		Flexible Coupling Kit	537832S
	2006.06-2012.12		Front;Rear	Saloon 4WD 642932		Flexible Coupling	512678
	2006.06-2012.12		Front;Rear	Saloon 4WD 642932		Flexible Coupling Kit	512673S

	YEAR	TRANSM.	FITTING POSITION	BODY STYLE & DRIVE TYPE & ENGINE	REMARKS	PRODUCT	GSP Ref.
MERCEDES-BENZ							
S320							
3.0 (200 kw)	2014.05-2020.07		Centre	Saloon RWD 276824		Center Bearing Support	538974
	2014.05-2020.07		Front	Saloon RWD 276824		Flexible Coupling	512672
	2014.05-2020.07		Rear	Saloon RWD 276824		Flexible Coupling	537630
	2014.05-2020.07		Front;Rear	Saloon RWD 276824		Flexible Coupling	512677
	2014.05-2020.07		Front	Saloon RWD 276824		Flexible Coupling Kit	537848S
	2014.05-2020.07		Rear	Saloon RWD 276824	7AT	Flexible Coupling Kit	537889S
	2014.05-2020.07		Front;Rear	Saloon RWD 276824		Flexible Coupling Kit	537630S
3.2 (145 kw)	1999.09-2002.08		Centre	Saloon RWD 613960		Center Bearing Support	538667
	1999.09-2002.08		Front;Rear	Saloon RWD 613960		Flexible Coupling	512677
	1999.09-2002.08		Front;Rear	Saloon RWD 613960		Flexible Coupling Kit	512677S
3.2 (150 kw)	2002.09-2005.08	AT	Front	Saloon RWD 648960		Propshaft	PS900364
	2002.09-2005.08		Centre	Saloon RWD 648960		Center Bearing Support	538667
	2002.09-2005.08		Front	Saloon RWD 648960		Flexible Coupling	512676
3.2 (165 kw)	1999.02-2002.08		Centre	Saloon RWD 112944	Height:57.7mm	Center Bearing Support	538667
	1999.02-2002.08		Front	Saloon RWD 112944		Flexible Coupling	510571
	1999.02-2002.08		Rear	Saloon RWD 112944		Flexible Coupling	512678
	1999.02-2002.08		Front	Saloon RWD 112944		Flexible Coupling Kit	510571S
	1999.02-2002.08		Front;Rear	Saloon RWD 112944		Flexible Coupling Kit	512673S
3.2 (170 kw)	1993.06-1998.10		Front;Rear	Saloon RWD 104990/104994	Chassis no. from:A 328811	Flexible Coupling	510571
	1993.06-1998.10		Front;Rear	Saloon RWD 104990/104994		Flexible Coupling	510579
	1993.06-1998.10		Front	Saloon RWD 104990/104994		Flexible Coupling Kit	510571S
	1993.06-1998.10		Front	Saloon RWD 104990/104994		Flexible Coupling Kit	510580S
S350							
2.9 (183 kw)	2018.07-2020.07		Front;Rear	Saloon 4WD 656929		Flexible Coupling Kit	537630S
2.9 (210 kw)	2017.05-2020.07		Front	Saloon 4WD 656929	Inner diameter:57.5mm	Flexible Coupling	537630
	2017.05-2020.07		Front	Saloon 4WD 656929	Inner diameter:70.5mm	Flexible Coupling	537851
	2017.05-2020.07		Front;Rear	Saloon 4WD 656929	Inner diameter:57.5mm	Flexible Coupling Kit	537630S
	2017.05-2020.07		Front;Rear	Saloon 4WD 656929	Inner diameter:70.5mm	Flexible Coupling Kit	537851S
	2017.07-2020.07		Front;Rear	Saloon RWD 656929		Flexible Coupling	537851
	2017.07-2020.07		Front;Rear	Saloon RWD 656929		Flexible Coupling Kit	537851S
3.0 (155 kw)	2009.01-2010.12		Front;Rear	Saloon 4WD 642932		Flexible Coupling	512678
	2009.01-2010.12		Front;Rear	Saloon 4WD 642932		Flexible Coupling Kit	512673S
	2009.06-2013.07		Front;Rear	Saloon RWD 642930		Flexible Coupling	533884
	2009.06-2013.07		Front;Rear	Saloon RWD 642930		Flexible Coupling Kit	537832S
3.0 (173 kw)	2009.06-2013.07		Centre	Saloon RWD 642930		Center Bearing Support	539005
	2009.06-2013.07		Front;Rear	Saloon 4WD 642932		Flexible Coupling	512678
	2009.06-2013.07		Front;Rear	Saloon RWD 642930		Flexible Coupling	533884
	2009.06-2013.07		Front;Rear	Saloon 4WD 642932		Flexible Coupling Kit	512673S
	2009.06-2013.07		Front;Rear	Saloon RWD 642930		Flexible Coupling Kit	537832S
3.0 (185 kw)	2014.02-2017.05		Front	Saloon 4WD 642867		Flexible Coupling	537630
	2014.02-2017.05		Front;Rear	Saloon 4WD 642867		Flexible Coupling	512677
	2014.02-2017.05		Front;Rear	Saloon 4WD 642867		Flexible Coupling Kit	537630S
3.0 (190 kw)	2010.06-2013.07	AT	Front	Saloon 4WD 642868		Propshaft	PS901588
	2010.06-2013.07		Centre	Saloon RWD 642862		Center Bearing Support	539005
	2010.06-2013.07		Front;Rear	Saloon 4WD 642868	7AT	Flexible Coupling	512677
	2010.06-2013.07		Front;Rear	Saloon RWD 642862		Flexible Coupling	533884
	2010.06-2013.07		Front;Rear	Saloon 4WD 642868	Inner diameter:50mm	Flexible Coupling Kit	512673S
	2010.06-2013.07		Front;Rear	Saloon 4WD 642868	Inner diameter:57.5mm	Flexible Coupling Kit	512677S
	2010.06-2013.07		Front;Rear	Saloon 4WD 642868	7AT	Flexible Coupling Kit	537794S
	2010.06-2013.07		Front;Rear	Saloon RWD 642862		Flexible Coupling Kit	537832S
	2013.05-2017.05		Front	Saloon RWD 642861		Flexible Coupling	537851
	2013.05-2017.05		Front;Rear	Saloon RWD 642861		Flexible Coupling	533884
	2013.05-2017.05		Front;Rear	Saloon RWD 642861		Flexible Coupling Kit	537851S
	2014.02-2017.05	7AT	Front	Saloon 4WD 642867		Propshaft	PS901588
	2014.02-2017.05		Front	Saloon 4WD 642867		Flexible Coupling	537630
	2014.02-2017.05		Front;Rear	Saloon 4WD 642867		Flexible Coupling Kit	537630S
3.0 (230 kw)	2017.09-2020.07		Centre	Saloon RWD M 276.824		Center Bearing Support	538974
	2017.09-2020.07		Rear	Saloon RWD M 276.824		Flexible Coupling	537630
	2017.09-2020.07		Front	Saloon RWD M 276.824		Flexible Coupling Kit	537889S
	2017.09-2020.07		Front;Rear	Saloon RWD M 276.824		Flexible Coupling Kit	537630S
3.4 (110 kw)	1993.06-1996.08		Front	Saloon RWD 603971		Flexible Coupling	512676
3.5 (200 kw)	2005.09-2013.07	AT	Rear	Saloon RWD 272965		Propshaft	PS901471
	2005.09-2013.07		Centre	Saloon RWD 272965		Center Bearing Support	539005
	2005.09-2013.07		Front;Rear	Saloon RWD 272965	7AT	Flexible Coupling	512677

	YEAR	TRANSM.	FITTING POSITION	BODY STYLE & DRIVE TYPE & ENGINE	REMARKS	PRODUCT	GSP Ref.
MERCEDES-BENZ							
S350							
3.5 (200 kw)	2005.09-2013.07		Front;Rear	Saloon RWD 272965		Flexible Coupling Kit	512677S
	2005.09-2013.07		Front;Rear	Saloon RWD 272965	7AT	Flexible Coupling Kit	537794S
	2006.09-2013.07	7AT	Front	Saloon 4WD 272975	Model year to:2011	Propshaft	PS900359
	2006.09-2013.07		Centre	Saloon 4WD 272975		Center Bearing Support	539005
	2006.09-2013.07		Front;Rear	Saloon 4WD 272975	Bolt Hole Centres:110mm	Flexible Coupling	512677
	2006.09-2013.07		Front;Rear	Saloon 4WD 272975	Bolt Hole Centres:100mm	Flexible Coupling	512678
	2006.09-2013.07		Front;Rear	Saloon 4WD 272975		Flexible Coupling Kit	512673S
	2006.09-2013.07		Front;Rear	Saloon 4WD 272975		Flexible Coupling Kit	512677S
	2006.09-2013.07		Front;Rear	Saloon 4WD 272975	7AT	Flexible Coupling Kit	537794S
3.5 (225 kw)	2011.01-2013.07	7AT	Front	Saloon 4WD 276950		Propshaft	PS900359
	2011.01-2013.07	AT	Rear	Saloon RWD 276950		Propshaft	PS901470
	2011.01-2013.07	AT	Rear	Saloon 4WD 276950		Propshaft	PS901470
	2011.01-2013.07		Centre	Saloon RWD 276950		Center Bearing Support	539005
	2011.01-2013.07		Front;Rear	Saloon RWD 276950	7AT	Flexible Coupling	512677
	2011.01-2013.07		Front;Rear	Saloon 4WD 276950		Flexible Coupling	512678
	2011.01-2013.07		Front;Rear	Saloon 4WD 276950		Flexible Coupling Kit	512673S
	2011.01-2013.07		Front;Rear	Saloon RWD 276950		Flexible Coupling Kit	512677S
	2011.01-2013.07		Front;Rear	Saloon RWD 276950	7AT	Flexible Coupling Kit	537794S
3.7 (180 kw)	2002.09-2005.12	AT	Front	Saloon RWD 112972		Propshaft	PS900364
	2002.09-2005.12		Centre	Saloon RWD 112972	Height:57.7mm	Center Bearing Support	538667
	2002.09-2005.12		Front;Rear	Saloon RWD 112972		Flexible Coupling	512677
	2002.09-2005.12		Front;Rear	Saloon RWD 112972		Flexible Coupling Kit	512677S
	2003.02-2005.08	5AT	Front	Saloon 4WD 112975		Propshaft	PS900351
	2003.02-2005.08		Centre	Saloon 4WD 112975	Height:57.7mm	Center Bearing Support	538667
	2003.02-2005.08		Front	Saloon 4WD 112975		Flexible Coupling	538111
	2003.02-2005.08		Front;Rear	Saloon 4WD 112975		Flexible Coupling	512678
	2003.02-2005.08		Front;Rear	Saloon 4WD 112975		Flexible Coupling Kit	512673S
S400							
2.9 (250 kw)	2017.05-2020.07		Front	Saloon 4WD 656929	Inner diameter:57.5mm	Flexible Coupling	537630
	2017.05-2020.07		Front	Saloon 4WD 656929	Inner diameter:70.5mm	Flexible Coupling	537851
	2017.05-2020.07		Front;Rear	Saloon 4WD 656929	Inner diameter:57.5mm	Flexible Coupling Kit	537630S
	2017.05-2020.07		Front;Rear	Saloon 4WD 656929	Inner diameter:70.5mm	Flexible Coupling Kit	537851S
	2017.07-2020.07		Front;Rear	Saloon RWD 656929		Flexible Coupling	537851
	2017.07-2020.07		Front;Rear	Saloon RWD 656929		Flexible Coupling Kit	537851S
3.0 (245 kw)	2013.09-2017.05	7AT	Rear	Saloon RWD 276824		Propshaft	PS901723
	2013.09-2017.05		Centre	Saloon RWD 276824		Center Bearing Support	538974
	2013.09-2017.05		Front	Saloon RWD 276824		Flexible Coupling	512672
	2013.09-2017.05		Rear	Saloon RWD 276824		Flexible Coupling	537851
	2013.09-2017.05		Front;Rear	Saloon RWD 276824		Flexible Coupling	533884
	2013.09-2017.05		Front	Saloon RWD 276824		Flexible Coupling Kit	537848S
	2013.09-2017.05		Rear	Saloon RWD 276824	7AT	Flexible Coupling Kit	537889S
	2014.11-2017.05		Front;Rear	Saloon 4WD 276824		Flexible Coupling	537627
	2014.11-2017.05		Front;Rear	Saloon 4WD 276824		Flexible Coupling Kit	537627S
3.0 (270 kw)	2015.10-2020.07		Front;Rear	Coupe 4WD 276824		Flexible Coupling	537627
	2015.10-2020.07		Front;Rear	Coupe 4WD 276824		Flexible Coupling Kit	537627S
3.5 (205 kw)	2008.11-2013.12		Centre	Saloon RWD 272974		Center Bearing Support	539005
	2008.11-2013.12		Front	Saloon RWD 272974	7AT	Flexible Coupling	512672
	2008.11-2013.12		Front;Rear	Saloon RWD 272974		Flexible Coupling	512677
	2008.11-2013.12		Front	Saloon RWD 272974	537794S and 537889S different structure	Flexible Coupling Kit	537794S
	2008.11-2013.12		Front	Saloon RWD 272974	537889S and 537794S different structure	Flexible Coupling Kit	537889S
	2008.11-2013.12		Rear	Saloon RWD 272974		Flexible Coupling Kit	537793S
	2008.11-2013.12		Front;Rear	Saloon RWD 272974		Flexible Coupling Kit	512677S
3.5 (225 kw)	2013.05-2017.05		Centre	Saloon RWD 276960		Center Bearing Support	538974
	2013.05-2017.05		Front	Saloon RWD 276960	7AT	Flexible Coupling	512672
	2013.05-2017.05		Front;Rear	Saloon RWD 276960		Flexible Coupling	538501
	2013.05-2017.05		Front;Rear	Saloon RWD 276960		Flexible Coupling Kit	538501S
4.0 (184 kw)	2000.07-2005.08		Centre	Saloon RWD 628960	Height:57.7mm	Center Bearing Support	538667
	2000.07-2005.08		Front	Saloon RWD 628960		Flexible Coupling	512676
4.0 (191 kw)	2003.08-2005.08		Centre	Saloon RWD 628960	Height:57.7mm	Center Bearing Support	538667
	2003.08-2005.08		Front	Saloon RWD 628960		Flexible Coupling	512676
S400 Maybach							
3.0 (245 kw)	2015.01-2017.05		Rear	Saloon 4WD 276824		Flexible Coupling	537847
	2015.01-2017.05		Front;Rear	Saloon 4WD 276824	9AT	Flexible Coupling	537627
	2015.01-2017.05		Front;Rear	Saloon 4WD 276824		Flexible Coupling Kit	537627S

	YEAR	TRANSM.	FITTING POSITION	BODY STYLE & DRIVE TYPE & ENGINE	REMARKS	PRODUCT	GSP Ref.
MERCEDES-BENZ							
S420							
4.0 (235 kw)	2006.06-2012.12		Rear	Saloon RWD 629911		Flexible Coupling	537843
	2006.06-2012.12		Front;Rear	Saloon RWD 629911		Flexible Coupling	533884
	2006.06-2012.12		Rear	Saloon RWD 629911		Flexible Coupling Kit	533884S
	2006.06-2012.12		Front;Rear	Saloon RWD 629911		Flexible Coupling Kit	537832S
4.2 (205 kw)	1993.01-1998.10		Centre	Saloon RWD 119971/119981		Center Bearing Support	539001
	1993.01-1998.10		Front	Saloon RWD 119971/119981		Flexible Coupling	512672
	1993.01-1998.10		Front;Rear	Saloon RWD 119971/119981		Flexible Coupling	512677
	1993.01-1998.10		Rear	Saloon RWD 119971/119981	512672S and 537889S different accessory	Flexible Coupling Kit	512672S
	1993.01-1998.10		Rear	Saloon RWD 119971/119981	537889S and 512672S different accessory	Flexible Coupling Kit	537889S
	1993.01-1998.10		Front;Rear	Saloon RWD 119971/119981		Flexible Coupling Kit	512677S
	1993.06-1998.08		Front	Coupe RWD 119971/119981		Flexible Coupling	512672
	1993.06-1998.08		Front;Rear	Coupe RWD 119971/119981		Flexible Coupling	512677
	1993.06-1998.08		Rear	Coupe RWD 119971/119981	512672S and 537889S different accessory	Flexible Coupling Kit	512672S
	1993.06-1998.08		Rear	Coupe RWD 119971/119981	537889S and 512672S different accessory	Flexible Coupling Kit	537889S
	1993.06-1998.08		Front;Rear	Coupe RWD 119971/119981		Flexible Coupling Kit	512677S
4.2 (210 kw)	1991.02-1998.10		Centre	Saloon RWD 119971		Center Bearing Support	539001
	1991.02-1998.10		Front	Saloon RWD 119971		Flexible Coupling	512676
	1991.02-1998.10		Front;Rear	Saloon RWD 119971		Flexible Coupling	512677
	1991.02-1998.10		Rear	Saloon RWD 119971		Flexible Coupling Kit	537889S
	1991.02-1998.10		Front;Rear	Saloon RWD 119971		Flexible Coupling Kit	512677S
S430							
4.3 (205 kw)	1998.09-2005.08		Centre	Saloon RWD 113941	Height:57.7mm	Center Bearing Support	538667
	1998.09-2005.08		Front;Rear	Saloon RWD 113941		Flexible Coupling	512677
	1998.09-2005.08		Front;Rear	Saloon RWD 113941		Flexible Coupling Kit	512677S
	1998.09-2005.08		Front;Rear	Saloon RWD 113941	7AT	Flexible Coupling Kit	537794S
	2002.09-2005.08	AT	Front	Saloon 4WD 113948		Propshaft	PS900364
	2002.09-2005.08		Centre	Saloon 4WD 113948	Height:57.7mm	Center Bearing Support	538667
	2002.09-2005.08		Front;Rear	Saloon 4WD 113948		Flexible Coupling	512678
	2002.09-2005.08		Front;Rear	Saloon 4WD 113948		Flexible Coupling Kit	512673S
S450							
3.0 (270 kw)	2015.12-2020.07		Front;Rear	Coupe 4WD 276824		Flexible Coupling	537627
	2015.12-2020.07		Front;Rear	Coupe 4WD 276824		Flexible Coupling Kit	537627S
	2017.02-2020.07	7AT	Rear	Saloon RWD 276824	Modelcode:222166	Propshaft	PS901723
	2017.02-2020.07		Centre	Saloon RWD 276824		Center Bearing Support	538974
	2017.02-2020.07		Front;Rear	Saloon RWD 276824	7AT	Flexible Coupling	533884
	2017.02-2020.07		Front;Rear	Saloon 4WD 276824		Flexible Coupling	537627
	2017.02-2020.07		Front;Rear	Saloon RWD 276824	9AT	Flexible Coupling	537851
	2017.02-2020.07		Front	Saloon RWD 276824		Flexible Coupling Kit	537848S
	2017.02-2020.07		Rear	Saloon RWD 276824	7AT	Flexible Coupling Kit	537889S
	2017.02-2020.07		Front;Rear	Saloon 4WD 276824		Flexible Coupling Kit	537627S
	2017.02-2020.07		Front;Rear	Saloon RWD 276824		Flexible Coupling Kit	537851S
	2017.07-2020.07		Front;Rear	Saloon 4WD 256930		Flexible Coupling	537627
	2017.07-2020.07		Front;Rear	Saloon RWD 256930		Flexible Coupling	537851
	2017.07-2020.07		Front;Rear	Saloon 4WD 256930		Flexible Coupling Kit	537627S
	2017.07-2020.07		Front;Rear	Saloon RWD 256930		Flexible Coupling Kit	537851S
	2020.10-		Front;Rear	Saloon 4WD 256930		Flexible Coupling	537627
	2020.10-		Front;Rear	Saloon 4WD 256930		Flexible Coupling Kit	537627S
	2021.07-		Front;Rear	Saloon RWD M 256.930		Flexible Coupling	537851
	2021.07-		Front;Rear	Saloon RWD 256930		Flexible Coupling	537851
3.0 (280 kw)	2022.09-		Front;Rear	Saloon 4WD 256830		Flexible Coupling	537627
	2022.09-		Front;Rear	Saloon 4WD 256830		Flexible Coupling Kit	537627S
4.0 (235 kw)	2009.06-2013.07		Rear	Saloon RWD 629911		Flexible Coupling	537843
	2009.06-2013.07		Front;Rear	Saloon RWD 629911		Flexible Coupling	533884
	2009.06-2013.07		Rear	Saloon RWD 629911		Flexible Coupling Kit	533884S
	2009.06-2013.07		Front;Rear	Saloon RWD 629911		Flexible Coupling Kit	537832S
4.7 (250 kw)	2005.12-2013.07		Centre	Saloon RWD 273922		Center Bearing Support	539005
	2005.12-2013.07		Front;Rear	Saloon RWD 273922	7AT	Flexible Coupling	512677
	2005.12-2013.07		Front;Rear	Saloon 4WD 273924		Flexible Coupling	512678
	2005.12-2013.07		Front;Rear	Saloon 4WD 273924		Flexible Coupling Kit	512673S
	2005.12-2013.07		Front;Rear	Saloon RWD 273922		Flexible Coupling Kit	512677S
	2005.12-2013.07		Front;Rear	Saloon RWD 273922	7AT	Flexible Coupling Kit	537794S
S450 Maybach							
3.0 (270 kw)	2017.09-2020.07		Front;Rear	Saloon 4WD 276824		Flexible Coupling	537627
	2017.09-2020.07		Front;Rear	Saloon 4WD 276824		Flexible Coupling Kit	537627S

	YEAR	TRANSM.	FITTING POSITION	BODY STYLE & DRIVE TYPE & ENGINE	REMARKS	PRODUCT	GSP Ref.
MERCEDES-BENZ **S500**							
3.0 (320 kw)	2017.07-2020.07		Front;Rear	Saloon RWD 256930		Flexible Coupling	537851
	2017.07-2020.07		Front;Rear	Saloon RWD 256930		Flexible Coupling Kit	537851S
	2020.09-		Front;Rear	Saloon 4WD 256930		Flexible Coupling	537627
	2020.09-		Front;Rear	Saloon 4WD 256930		Flexible Coupling Kit	537627S
3.0 (325 kw)	2014.07-2017.05		Rear	Saloon RWD 276824	7AT	Flexible Coupling	537843
	2014.07-2017.05		Front;Rear	Saloon RWD 276824	7AT	Flexible Coupling	533884
	2014.07-2017.05		Front;Rear	Saloon RWD 276824	9AT	Flexible Coupling	538506
	2014.07-2017.05		Front	Saloon RWD 276824		Flexible Coupling Kit	538509S
	2014.07-2017.05		Front;Rear	Saloon RWD 276824		Flexible Coupling Kit	537832S
3.0 (330 kw)	2022.09-		Front;Rear	Saloon 4WD 256830		Flexible Coupling	537627
	2022.09-		Front;Rear	Saloon 4WD 256830		Flexible Coupling Kit	537627S
4.0 (310 kw)	2014.11-2017.10		Front	Coupe 4WD M 278.910		Flexible Coupling	537851
	2014.11-2017.10		Front;Rear	Coupe 4WD M 278.910		Flexible Coupling Kit	537630S
4.7 (320 kw)	2011.01-2013.07		Front;Rear	Saloon 4WD 278932		Flexible Coupling	512677
	2011.01-2013.07		Front;Rear	Saloon RWD 278932		Flexible Coupling	533884
	2011.01-2013.07		Front	Saloon RWD 278932		Flexible Coupling Kit	537832S
	2011.01-2013.07		Front;Rear	Saloon 4WD 278932		Flexible Coupling Kit	512677S
	2013.09-2017.05		Rear	Saloon 4WD 278929	7AT	Flexible Coupling	537843
	2013.09-2017.05		Front;Rear	Saloon 4WD 278929	Inner diameter:69.5mm	Flexible Coupling	533884
	2013.09-2017.05		Front;Rear	Saloon RWD 278929	7AT	Flexible Coupling	533884
	2013.09-2017.05		Front;Rear	Saloon RWD 278929	9AT	Flexible Coupling	537851
	2013.09-2017.05		Rear	Saloon 4WD 278929		Flexible Coupling Kit	538509S
	2013.09-2017.05		Front;Rear	Saloon 4WD 278929		Flexible Coupling Kit	537630S
	2013.09-2017.05		Front;Rear	Saloon RWD 278929		Flexible Coupling Kit	537851S
4.7 (335 kw)	2013.05-2017.05		Front	Saloon RWD 278929		Flexible Coupling	537851
	2013.05-2017.05		Rear	Saloon RWD 278929	7AT	Flexible Coupling	537843
	2013.05-2017.05		Front;Rear	Saloon RWD 278929		Flexible Coupling	533884
	2013.05-2017.05		Rear	Saloon RWD 278929		Flexible Coupling Kit	538509S
	2013.05-2017.05		Front;Rear	Saloon RWD 278929		Flexible Coupling Kit	537851S
	2013.07-2017.05		Front	Saloon 4WD 278929		Flexible Coupling	537630
	2013.07-2017.05		Rear	Saloon 4WD 278929	7AT	Flexible Coupling	537843
	2013.07-2017.05		Front;Rear	Saloon 4WD 278929	7AT	Flexible Coupling	533884
	2013.07-2017.05		Rear	Saloon 4WD 278929		Flexible Coupling Kit	538509S
	2013.07-2017.05		Front;Rear	Saloon 4WD 278929		Flexible Coupling Kit	537630S
	2014.04-2017.10		Front	Coupe 4WD 278929		Flexible Coupling	537630
	2014.04-2017.10		Front;Rear	Coupe 4WD 278929		Flexible Coupling Kit	537630S
	2014.11-2017.10		Front	Coupe RWD 278929		Flexible Coupling	537851
	2014.11-2017.10		Front;Rear	Coupe RWD 278929		Flexible Coupling	533884
	2014.11-2017.10		Front	Coupe RWD 278929		Flexible Coupling Kit	537851S
	2015.12-2017.10		Front	Cabriolet RWD 278929		Flexible Coupling	537851
	2015.12-2017.10		Front;Rear	Cabriolet RWD 278929		Flexible Coupling	533884
	2015.12-2017.10		Front	Cabriolet RWD 278929		Flexible Coupling Kit	537851S
4.7 (338 kw)	2014.06-2017.05		Front	Saloon RWD M 278.929		Flexible Coupling	537851
	2014.06-2017.05		Rear	Saloon RWD M 278.929		Flexible Coupling Kit	538509S
5.0 (220 kw)	1998.10-2003.12		Front	Saloon RWD 113960		Flexible Coupling	512676
	1998.10-2003.12		Front;Rear	Saloon RWD 113960		Flexible Coupling	512677
	1998.10-2003.12		Front;Rear	Saloon RWD 113960		Flexible Coupling Kit	512677S
5.0 (225 kw)	1998.10-2005.08		Centre	Saloon RWD 113960	Height:57.7mm	Center Bearing Support	538667
	1998.10-2005.08		Front	Saloon RWD 113960		Flexible Coupling	512676
	1998.10-2005.08		Front;Rear	Saloon RWD 113960	not for 7AT	Flexible Coupling	512677
	1998.10-2005.08		Front;Rear	Saloon RWD 113960	7AT	Flexible Coupling	538513
	1998.10-2005.08		Front;Rear	Saloon RWD 113960	Inner diameter:57.5mm	Flexible Coupling Kit	512677S
	1998.10-2005.08		Front;Rear	Saloon RWD 113960	7AT	Flexible Coupling Kit	537794S
	1998.10-2005.08		Front;Rear	Saloon RWD 113960	Inner diameter:63mm	Flexible Coupling Kit	538513S
	2002.09-2005.08	AT	Front	Saloon 4WD 113966		Propshaft	PS900364
	2002.09-2005.08		Centre	Saloon 4WD 113966	Height:57.7mm	Center Bearing Support	538667
	2002.09-2005.08		Front;Rear	Saloon 4WD 113966		Flexible Coupling	512678
	2002.09-2005.08		Front;Rear	Saloon 4WD 113966		Flexible Coupling Kit	512673S
5.0 (235 kw)	1992.10-1999.12		Front	Coupe RWD 119970		Flexible Coupling	512672
	1992.10-1999.12		Front;Rear	Coupe RWD 119970		Flexible Coupling	512677
	1992.10-1999.12		Rear	Coupe RWD 119970	512672S and 537889S different accessory	Flexible Coupling Kit	512672S
	1992.10-1999.12		Rear	Coupe RWD 119970	537889S and 512672S different accessory	Flexible Coupling Kit	537889S
	1992.10-1999.12		Front;Rear	Coupe RWD 119970		Flexible Coupling Kit	512677S
	1993.01-1997.12		Centre	Saloon RWD 119980		Center Bearing Support	539001

	YEAR	TRANSM.	FITTING POSITION	BODY STYLE & DRIVE TYPE & ENGINE	REMARKS	PRODUCT	GSP Ref.
MERCEDES-BENZ							
S500							
5.0 (235 kw)	1993.01-1997.12		Front	Saloon RWD 119980		Flexible Coupling	512672
	1993.01-1997.12		Front;Rear	Saloon RWD 119980		Flexible Coupling	512677
	1993.01-1997.12		Rear	Saloon RWD 119980	512672S and 537889S different accessory	Flexible Coupling Kit	512672S
	1993.01-1997.12		Rear	Saloon RWD 119980	537889S and 512672S different accessory	Flexible Coupling Kit	537889S
	1993.01-1997.12		Front;Rear	Saloon RWD 119980		Flexible Coupling Kit	512677S
5.0 (240 kw)	1991.06-1998.10		Centre	Saloon RWD 119970		Center Bearing Support	539001
	1991.06-1998.10		Front	Saloon RWD 119970		Flexible Coupling	512672
	1991.06-1998.10		Front;Rear	Saloon RWD 119970		Flexible Coupling	512677
	1991.06-1998.10		Rear	Saloon RWD 119970	512672S and 537889S different accessory	Flexible Coupling Kit	512672S
	1991.06-1998.10		Rear	Saloon RWD 119970	537889S and 512672S different accessory	Flexible Coupling Kit	537889S
	1991.06-1998.10		Front;Rear	Saloon RWD 119970		Flexible Coupling Kit	512677S
5.5 (271 kw)	2011.05-2013.12		Front	Saloon RWD M 273.961		Flexible Coupling	533884
	2011.05-2013.12		Front	Saloon RWD M 273.961		Flexible Coupling Kit	537832S
5.5 (285 kw)	2005.09-2013.07		Centre	Saloon RWD 273961		Center Bearing Support	539005
	2005.09-2013.07		Front;Rear	Saloon RWD 273961		Flexible Coupling	533884
	2005.09-2013.07		Front;Rear	Saloon RWD 273961		Flexible Coupling Kit	537832S
	2006.06-2013.07	7AT	Front	Saloon 4WD 273968	Model year from:2006,Model year to:2010	Propshaft	PS900359
	2006.06-2013.07	AT	Rear	Saloon 4WD 273968	Model year from:2007,Model year to:2011	Propshaft	PS901465
	2006.06-2013.07		Front;Rear	Saloon 4WD 273968		Flexible Coupling	512678
	2006.06-2013.07		Front;Rear	Saloon 4WD 273968		Flexible Coupling Kit	512673S
S500 Maybach							
4.0 (310 kw)	2015.09-2017.05		Front	Saloon 4WD M 278.910		Flexible Coupling	537630
	2015.09-2017.05		Front;Rear	Saloon 4WD M 278.910		Flexible Coupling Kit	537630S
4.7 (335 kw)	2014.12-2017.05		Centre	Saloon RWD 278929		Center Bearing Support	538974
	2014.12-2017.05		Front	Saloon RWD 278929		Flexible Coupling	537851
	2014.12-2017.05		Front;Rear	Saloon RWD 278929		Flexible Coupling	533884
	2014.12-2017.05		Front;Rear	Saloon RWD 278929		Flexible Coupling Kit	537851S
	2015.04-2017.05		Front	Saloon 4WD 278929		Flexible Coupling	537630
	2015.04-2017.05		Front;Rear	Saloon 4WD 278929		Flexible Coupling	512677
	2015.04-2017.05		Front;Rear	Saloon 4WD 278929		Flexible Coupling Kit	537630S
S55 AMG							
5.4 (265 kw)	1999.09-2002.08		Centre	Saloon RWD 113986	Height:57.7mm	Center Bearing Support	538667
	1999.09-2002.08		Front	Saloon RWD 113986		Flexible Coupling	512676
5.4 (368 kw)	2002.09-2005.08	AT	Front	Saloon RWD 113991		Propshaft	PS900364
	2002.09-2005.08		Centre	Saloon RWD 113991	Height:57.7mm	Center Bearing Support	538667
	2002.09-2005.08		Front;Rear	Saloon RWD 113991		Flexible Coupling	533884
	2002.09-2005.08		Front;Rear	Saloon RWD 113991		Flexible Coupling Kit	537832S
S550							
4.6 (320 kw)	2011.09-2013.12		Front;Rear	Saloon 4WD M 278.932		Flexible Coupling Kit	512677S
4.7 (320 kw)	2011.01-2013.07		Front;Rear	Saloon RWD 278932		Flexible Coupling	533884
	2011.01-2013.07		Front	Saloon RWD 278932		Flexible Coupling Kit	537832S
4.7 (335 kw)	2013.05-2017.05		Front	Saloon 4WD 278929		Flexible Coupling	537630
	2013.05-2017.05		Rear	Saloon 4WD 278929	7AT	Flexible Coupling	537843
	2013.05-2017.05		Front;Rear	Saloon 4WD 278929	7AT	Flexible Coupling	533884
	2013.05-2017.05		Rear	Saloon 4WD 278929		Flexible Coupling Kit	538509S
	2013.05-2017.05		Front;Rear	Saloon 4WD 278929		Flexible Coupling Kit	537630S
S560							
3.0 (350 kw)	2018.10-2020.07		Front;Rear	Saloon RWD 276824		Flexible Coupling	538506
4.0 (345 kw)	2017.05-2020.07		Front	Saloon 4WD 176980		Flexible Coupling	537630
	2017.05-2020.07		Front;Rear	Saloon 4WD 176980		Flexible Coupling Kit	537630S
	2017.07-2020.07		Front;Rear	Saloon RWD 176980		Flexible Coupling	537851
	2017.07-2020.07		Front;Rear	Saloon RWD 176980		Flexible Coupling Kit	537851S
	2017.10-2020.07		Front	Cabriolet RWD 176980		Flexible Coupling	537851
	2017.10-2020.07		Front	Coupe RWD 176980		Flexible Coupling	537851
	2017.10-2020.07		Front;Rear	Coupe 4WD 176980		Flexible Coupling	537630
	2017.10-2020.07		Front;Rear	Coupe 4WD 176980		Flexible Coupling Kit	537630S
S560 Maybach							
4.0 (345 kw)	2017.07-2020.07		Front;Rear	Saloon RWD 176980		Flexible Coupling	537851
	2017.07-2020.07		Front;Rear	Saloon RWD 176980		Flexible Coupling Kit	537851S
	2017.09-2020.07		Front	Saloon 4WD 176980		Flexible Coupling	537630
	2017.09-2020.07		Front;Rear	Saloon 4WD 176980		Flexible Coupling Kit	537630S
S600							
5.5 (368 kw)	2002.09-2005.08	AT	Front	Saloon RWD 275950		Propshaft	PS900364
	2002.09-2005.08		Front;Rear	Saloon RWD 275950		Flexible Coupling	533884

	YEAR	TRANSM.	FITTING POSITION	BODY STYLE & DRIVE TYPE & ENGINE	REMARKS	PRODUCT	GSP Ref.
MERCEDES-BENZ							
S600							
5.5 (368 kw)	2002.09-2005.08		Front;Rear	Saloon RWD 275950		Flexible Coupling Kit	537832S
5.5 (380 kw)	2005.09-2013.12		Rear	Saloon RWD 275953		Flexible Coupling	537843
	2005.09-2013.12		Front;Rear	Saloon RWD 275953		Flexible Coupling	533884
	2005.09-2013.12		Front;Rear	Saloon RWD 275953		Flexible Coupling Kit	537832S
5.8 (270 kw)	1999.09-2002.08		Centre	Saloon RWD 137970	Height:57.7mm	Center Bearing Support	538667
	1999.09-2002.08		Front	Saloon RWD 137970		Flexible Coupling	512676
6.0 (290 kw)	1991.09-1998.10		Front	Saloon RWD 120980/120982		Flexible Coupling	512676
	1992.09-1999.02		Front	Coupe RWD 120980/120982		Flexible Coupling	512676
6.0 (390 kw)	2014.02-2020.07		Rear	Saloon RWD 277980	7AT	Flexible Coupling	537843
	2014.02-2020.07		Front;Rear	Saloon RWD 277980		Flexible Coupling	533884
	2014.02-2020.07		Rear	Saloon RWD 277980		Flexible Coupling Kit	538509S
S600 Maybach							
6.0 (390 kw)	2015.01-2018.11		Rear	Saloon RWD 277980	7AT	Flexible Coupling	537843
	2015.01-2018.11		Front;Rear	Saloon RWD 277980	7AT	Flexible Coupling	533884
	2015.01-2018.11		Front;Rear	Saloon RWD 277980	SA code to:808	Flexible Coupling Kit	537832S
	2015.01-2018.11		Front;Rear	Saloon RWD 277980	SA code from:809	Flexible Coupling Kit	538509S
S63 AMG							
4.0 (450 kw)	2017.05-2020.07	7AT	Front	Saloon 4WD 177980		Propshaft	PS901588
	2017.05-2020.07		Front;Rear	Saloon 4WD 177980		Flexible Coupling	537851
	2017.05-2020.07		Front;Rear	Saloon 4WD 177980		Flexible Coupling Kit	537851S
	2017.10-2020.07	7AT	Front	Cabriolet 4WD 177980		Propshaft	PS901588
	2017.10-2020.07	7AT	Front	Coupe 4WD 177980		Propshaft	PS901588
	2017.10-2020.07		Front;Rear	Cabriolet 4WD 177980		Flexible Coupling	537851
	2017.10-2020.07		Front;Rear	Coupe 4WD 177980		Flexible Coupling	537851
	2018.12-2020.07		Front;Rear	Coupe RWD 177980		Flexible Coupling	533884
	2018.12-2020.07		Front;Rear	Cabriolet RWD 177980		Flexible Coupling	533884
5.5 (430 kw)	2013.07-2017.05	7AT	Front	Saloon 4WD 157985		Propshaft	PS900359
	2013.07-2017.05		Front;Rear	Saloon 4WD 157985		Flexible Coupling	533884
	2013.07-2017.05		Front;Rear	Saloon RWD 157985		Flexible Coupling	533884
	2014.04-2017.10	7AT	Front	Coupe 4WD 157985	Model year from:2015,Model year to:2016	Propshaft	PS900359
	2014.04-2017.10		Front;Rear	Coupe 4WD 157985		Flexible Coupling	533884
	2014.07-2017.10		Front;Rear	Coupe RWD 157985		Flexible Coupling	533884
	2015.11-2017.10		Front;Rear	Cabriolet 4WD 157985		Flexible Coupling	533884
	2016.02-2017.10		Front;Rear	Cabriolet RWD 157985		Flexible Coupling	533884
6.2 (386 kw)	2006.12-2013.07		Front;Rear	Saloon RWD 156984		Flexible Coupling	533884
	2006.12-2013.07		Front;Rear	Saloon RWD 156984		Flexible Coupling Kit	537832S
S65 AMG							
6.0 (450 kw)	2004.03-2005.08	AT	Front	Saloon RWD 275980		Propshaft	PS900364
	2004.03-2005.08		Front;Rear	Saloon RWD 275980		Flexible Coupling	533884
	2004.03-2005.08		Front;Rear	Saloon RWD 275980		Flexible Coupling Kit	537832S
	2005.12-2013.07		Front;Rear	Saloon RWD 275982		Flexible Coupling	533884
	2005.12-2013.07		Front;Rear	Saloon RWD 275982		Flexible Coupling Kit	537832S
6.0 (463 kw)	2010.10-2013.12		Front;Rear	Saloon RWD 275982		Flexible Coupling	533884
	2010.10-2013.12		Front;Rear	Saloon RWD 275982		Flexible Coupling Kit	537832S
	2014.02-2019.11		Rear	Saloon RWD 279980	7AT	Flexible Coupling	537843
	2014.02-2019.11		Front;Rear	Saloon RWD 279980		Flexible Coupling	533884
	2014.02-2019.11		Rear	Saloon RWD 279980		Flexible Coupling Kit	538509S
	2014.07-2019.05		Front;Rear	Coupe RWD 279980		Flexible Coupling	533884
	2016.04-2019.05		Front;Rear	Cabriolet RWD 279980		Flexible Coupling	533884
S650 Maybach							
6.0 (463 kw)	2017.07-2020.07		Rear	Saloon RWD 279980	7AT	Flexible Coupling	537843
	2017.07-2020.07		Front;Rear	Saloon RWD 279980		Flexible Coupling	533884
	2017.07-2020.07		Front;Rear	Saloon RWD 279980	SA code to:880	Flexible Coupling Kit	537832S
	2017.07-2020.07		Front;Rear	Saloon RWD 279980	SA code from:809	Flexible Coupling Kit	538509S
S680 Maybach							
6.0 (450 kw)	2021.05-		Front;Rear	Saloon 4WD 279980		Flexible Coupling	537851
SL280							
2.8 (142 kw)	1993.06-1998.05		Front	Cabriolet RWD 104943		Flexible Coupling	510571
	1993.06-1998.05		Front;Rear	Cabriolet RWD 104943		Flexible Coupling	510579
	1993.06-1998.05		Front	Cabriolet RWD 104943		Flexible Coupling Kit	510580S
2.8 (150 kw)	1998.06-2001.07		Front	Cabriolet RWD 112923	538111 and 512678 different structure	Flexible Coupling	538111
	1998.06-2001.07		Front;Rear	Cabriolet RWD 112923	Quantity required:1	Flexible Coupling	512678
	1998.06-2001.07		Front	Cabriolet RWD 112923		Flexible Coupling Kit	510580S
	1998.06-2001.07		Front;Rear	Cabriolet RWD 112923		Flexible Coupling Kit	512673S

	YEAR	TRANSM.	FITTING POSITION	BODY STYLE & DRIVE TYPE & ENGINE	REMARKS	PRODUCT	GSP Ref.
MERCEDES-BENZ							
SL280							
3.0 (170 kw)	2007.08-2012.01		Centre	Cabriolet RWD 272949		Center Bearing Support	538639
	2007.08-2012.01		Front;Rear	Cabriolet RWD 272949		Flexible Coupling	512678
	2007.08-2012.01		Front;Rear	Cabriolet RWD 272949		Flexible Coupling Kit	512673S
SL300							
3.0 (170 kw)	2009.06-2012.01		Centre	Cabriolet RWD 272949		Center Bearing Support	538639
	2009.06-2012.01		Front;Rear	Cabriolet RWD 272949		Flexible Coupling	512678
	2009.06-2012.01		Front;Rear	Cabriolet RWD 272949		Flexible Coupling Kit	512673S
SL320							
3.2 (165 kw)	1998.06-2001.07		Front;Rear	Cabriolet RWD 112943		Flexible Coupling	512678
	1998.06-2001.07		Front	Cabriolet RWD 112943		Flexible Coupling Kit	510580S
	1998.06-2001.07		Front;Rear	Cabriolet RWD 112943		Flexible Coupling Kit	512673S
3.2 (170 kw)	1994.01-1998.05		Front;Rear	Cabriolet RWD 104991		Flexible Coupling	510579
	1994.01-1998.05		Front	Cabriolet RWD 104991		Flexible Coupling Kit	510580S
SL350							
3.5 (200 kw)	2006.03-2008.11		Centre	Cabriolet RWD 272966		Center Bearing Support	538639
	2006.03-2008.11		Front;Rear	Cabriolet RWD 272966	7AT	Flexible Coupling	512677
	2006.03-2008.11		Front;Rear	Cabriolet RWD 272966		Flexible Coupling Kit	512677S
	2006.03-2008.11		Front;Rear	Cabriolet RWD 272966	7AT	Flexible Coupling Kit	537794S
3.5 (225 kw)	2011.12-2017.12		Front;Rear	Cabriolet RWD 276954	7AT	Flexible Coupling	512677
	2011.12-2017.12		Front;Rear	Cabriolet RWD 276954	9AT	Flexible Coupling	538503
	2011.12-2017.12		Front;Rear	Cabriolet RWD 276954		Flexible Coupling Kit	512677S
	2011.12-2017.12		Front;Rear	Cabriolet RWD 276954	7AT	Flexible Coupling Kit	537794S
3.5 (232 kw)	2008.04-2012.01		Centre	Cabriolet RWD 272968		Center Bearing Support	538639
	2008.04-2012.01		Front;Rear	Cabriolet RWD 272968	7AT	Flexible Coupling	512677
	2008.04-2012.01		Front;Rear	Cabriolet RWD 272968		Flexible Coupling Kit	512677S
	2008.04-2012.01		Front;Rear	Cabriolet RWD 272968	7AT	Flexible Coupling Kit	537794S
3.7 (180 kw)	2002.08-2005.07		Centre	Cabriolet RWD 112973	with bearing	Center Bearing Support	538639
	2002.08-2005.07		Front;Rear	Cabriolet RWD 112973		Flexible Coupling	512677
	2002.08-2005.07		Front;Rear	Cabriolet RWD 112973		Flexible Coupling Kit	512677S
SL400							
3.0 (245 kw)	2014.04-2016.03		Front;Rear	Cabriolet RWD 276825	9AT	Flexible Coupling	538503
3.0 (270 kw)	2016.01-2020.04		Front;Rear	Cabriolet RWD 276825	9AT	Flexible Coupling	538503
SL500							
4.7 (320 kw)	2011.12-2020.04		Front;Rear	Cabriolet RWD 278927		Flexible Coupling	533884
	2011.12-2020.04		Front;Rear	Cabriolet RWD 278927	9AT	Flexible Coupling	537851
	2011.12-2020.04		Front;Rear	Cabriolet RWD 278927	Inner diameter:70mm	Flexible Coupling Kit	537832S
	2011.12-2020.04		Front;Rear	Cabriolet RWD 278927	Inner diameter:70.5mm	Flexible Coupling Kit	537851S
4.7 (335 kw)	2015.04-2020.04		Front;Rear	Cabriolet RWD 278927		Flexible Coupling	537851
	2015.04-2020.04		Front;Rear	Cabriolet RWD 278927		Flexible Coupling Kit	537851S
5.0 (225 kw)	1998.06-2002.12		Front;Rear	Cabriolet RWD 113961		Flexible Coupling	512677
	1998.06-2002.12		Front;Rear	Cabriolet RWD 113961		Flexible Coupling Kit	512677S
	2001.08-2012.01		Front;Rear	Cabriolet RWD 113963		Flexible Coupling	512677
	2001.08-2012.01		Front;Rear	Cabriolet RWD 113963		Flexible Coupling Kit	512677S
	2001.08-2012.01		Front;Rear	Cabriolet RWD 113963	7AT	Flexible Coupling Kit	537794S
5.0 (235 kw)	1992.09-2003.12		Centre	Cabriolet RWD 119972/119982		Center Bearing Support	539001
	1992.09-2003.12		Front	Cabriolet RWD 119972/119982		Flexible Coupling	512676
	1992.09-2003.12		Front;Rear	Cabriolet RWD 119972/119982		Flexible Coupling	512677
	1992.09-2003.12		Front;Rear	Cabriolet RWD 119972/119982		Flexible Coupling Kit	512677S
5.5 (285 kw)	2006.03-2012.01		Front;Rear	Cabriolet RWD 273965		Flexible Coupling	533884
	2006.03-2012.01		Front;Rear	Cabriolet RWD 273965		Flexible Coupling Kit	537832S
SL55 AMG							
5.4 (350 kw)	2001.08-2002.07		Front;Rear	Cabriolet RWD 113992		Flexible Coupling	533884
	2001.08-2002.07		Front;Rear	Cabriolet RWD 113992		Flexible Coupling Kit	537832S
5.4 (368 kw)	2002.08-2005.07		Front;Rear	Cabriolet RWD 113992		Flexible Coupling	533884
	2002.08-2005.07		Front;Rear	Cabriolet RWD 113992		Flexible Coupling Kit	537832S
5.4 (380 kw)	2006.03-2012.01		Front;Rear	Cabriolet RWD 113995		Flexible Coupling	533884
	2006.03-2012.01		Front;Rear	Cabriolet RWD 113995		Flexible Coupling Kit	537832S
SL60 AMG							
6.0 (280 kw)	1996.06-2001.07		Centre	Cabriolet RWD 119972AMG/119982AMG		Center Bearing Support	539001
	1996.06-2001.07		Front	Cabriolet RWD 119972AMG/119982AMG		Flexible Coupling	512676
	1996.06-2001.07		Front;Rear	Cabriolet RWD 119972AMG/119982AMG		Flexible Coupling	512677
	1996.06-2001.07		Front;Rear	Cabriolet RWD 119972AMG/119982AMG		Flexible Coupling Kit	512677S

	YEAR	TRANSM.	FITTING POSITION	BODY STYLE & DRIVE TYPE & ENGINE	REMARKS	PRODUCT	GSP Ref.
MERCEDES-BENZ							
SL600							
5.5 (368 kw)	2003.02-2012.01		Front;Rear	Cabriolet RWD 275951		Flexible Coupling	533884
	2003.02-2012.01		Front;Rear	Cabriolet RWD 275951		Flexible Coupling Kit	537832S
5.5 (380 kw)	2006.01-2012.01		Front;Rear	Cabriolet RWD 275954		Flexible Coupling	533884
	2006.01-2012.01		Front;Rear	Cabriolet RWD 275954		Flexible Coupling Kit	537832S
6.0 (290 kw)	1992.07-2001.10		Front	Cabriolet RWD 120981/120983		Flexible Coupling	512676
SL63 AMG							
5.5 (395 kw)	2012.01-2019.05		Front;Rear	Cabriolet RWD 157983		Flexible Coupling	533884
	2012.01-2019.05		Front;Rear	Cabriolet RWD 157983		Flexible Coupling Kit	537832S
5.5 (415 kw)	2012.01-2019.05		Front;Rear	Cabriolet RWD 157983		Flexible Coupling	533884
	2012.01-2019.05		Front;Rear	Cabriolet RWD 157983		Flexible Coupling Kit	537832S
5.5 (420 kw)	2018.07-2019.05		Front;Rear	Cabriolet RWD 157983		Flexible Coupling	533884
5.5 (430 kw)	2014.04-2019.05		Front;Rear	Cabriolet RWD 157983		Flexible Coupling	533884
SL65 AMG							
6.0 (450 kw)	2004.09-2011.12		Front;Rear	Cabriolet RWD 275981		Flexible Coupling	533884
	2004.09-2011.12		Front;Rear	Cabriolet RWD 275981		Flexible Coupling Kit	537832S
6.0 (463 kw)	2012.01-2018.06		Front;Rear	Cabriolet RWD 279981		Flexible Coupling	533884
	2012.01-2018.06		Front;Rear	Cabriolet RWD 279981		Flexible Coupling Kit	537832S
SL73 AMG							
7.3 (386 kw)	1999.01-2001.12		Front	Cabriolet RWD 120983AMG		Flexible Coupling	512676
SLC180							
1.6 (115 kw)	2016.01-		Front;Rear	Cabriolet RWD 274910		Flexible Coupling	537627
	2016.01-		Front;Rear	Cabriolet RWD 274910		Flexible Coupling Kit	537627S
SLC200							
2.0 (135 kw)	2016.01-		Front;Rear	Cabriolet RWD 274920		Flexible Coupling	537627
	2016.01-		Front;Rear	Cabriolet RWD 274920		Flexible Coupling Kit	537627S
SLC250							
2.2 (150 kw)	2016.01-2017.10		Front	Cabriolet RWD 651980		Flexible Coupling	537630
	2016.01-2017.10		Rear	Cabriolet RWD 651980		Flexible Coupling	538505
	2016.01-2017.10		Front;Rear	Cabriolet RWD 651980		Flexible Coupling	512677
	2016.01-2017.10		Rear	Cabriolet RWD 651980		Flexible Coupling Kit	538505S
	2016.01-2017.10		Front;Rear	Cabriolet RWD 651980		Flexible Coupling Kit	512677S
	2016.01-2017.10		Front;Rear	Cabriolet RWD 651980		Flexible Coupling Kit	537630S
SLC260							
2.0 (155 kw)	2018.05-		Front;Rear	Convertible RWD M 274.920		Flexible Coupling Kit	537630S
SLC300							
2.0 (180 kw)	2016.01-		Front	Cabriolet RWD 274920		Flexible Coupling	537630
	2016.01-		Front;Rear	Cabriolet RWD 274920		Flexible Coupling Kit	537630S
SLC43 AMG							
3.0 (270 kw)	2016.01-		Front	Cabriolet RWD 276822		Flexible Coupling	537630
	2016.01-		Rear	Cabriolet RWD 276822		Flexible Coupling	538505
	2016.01-		Rear	Cabriolet RWD 276822		Flexible Coupling Kit	538505S
	2016.01-		Front;Rear	Cabriolet RWD 276822		Flexible Coupling Kit	537630S
3.0 (287 kw)	2018.06-		Rear	Cabriolet RWD 276822	537630 and 538505 different structure	Flexible Coupling	537630
	2018.06-		Rear	Cabriolet RWD 276822	538505 and 537630 different structure	Flexible Coupling	538505
	2018.06-		Rear	Cabriolet RWD 276822		Flexible Coupling Kit	538505S
	2018.06-		Front;Rear	Cabriolet RWD 276822		Flexible Coupling Kit	537630S
SLK200							
1.8 (120 kw)	2004.03-2011.02		Front;Rear	Cabriolet RWD 271944		Flexible Coupling	512678
	2004.03-2011.02		Front;Rear	Cabriolet RWD 271944		Flexible Coupling Kit	512673S
1.8 (135 kw)	2008.01-2011.02		Front;Rear	Cabriolet RWD 271954		Flexible Coupling	512678
	2008.01-2011.02		Front;Rear	Cabriolet RWD 271954		Flexible Coupling Kit	512673S
	2011.01-		Front;Rear	Cabriolet RWD 271861		Flexible Coupling	512678
	2011.01-		Front;Rear	Cabriolet RWD 271861		Flexible Coupling Kit	512673S
2.0 (100 kw)	1996.09-1999.09		Centre	Cabriolet RWD 111946		Center Bearing Support	538669
	1996.09-1999.09		Front	Cabriolet RWD 111946		Flexible Coupling	510569
	1996.09-1999.09		Front	Cabriolet RWD 111946	MT,for left-hand drive vehicles	Flexible Coupling	512326
	1996.09-1999.09		Front	Cabriolet RWD 111946		Flexible Coupling Kit	510578S
	1996.09-1999.09		Front	Cabriolet RWD 111946	MT,for vehicles with air conditioning	Flexible Coupling Kit	537821S
	1996.09-1999.09		Rear	Cabriolet RWD 111946		Flexible Coupling Kit	510570S
2.0 (120 kw)	1999.10-2003.09		Front;Rear	Cabriolet RWD 111958		Flexible Coupling	512678
	1999.10-2003.09		Front	Cabriolet RWD 111958		Flexible Coupling Kit	510580S
	1999.10-2003.09		Front;Rear	Cabriolet RWD 111958		Flexible Coupling Kit	512673S
2.0 (135 kw)	2015.04-		Front;Rear	Cabriolet RWD 274920		Flexible Coupling	537627
	2015.04-		Front;Rear	Cabriolet RWD 274920		Flexible Coupling Kit	537627S

	YEAR	TRANSM.	FITTING POSITION	BODY STYLE & DRIVE TYPE & ENGINE	REMARKS	PRODUCT	GSP Ref.
MERCEDES-BENZ							
SLK200							
2.0 (141 kw)	1996.10-2000.03		Centre	Cabriolet RWD 111943		Center Bearing Support	538666
	1996.10-2000.03		Front;Rear	Cabriolet RWD 111943		Flexible Coupling	510579
	1996.10-2000.03		Front;Rear	Cabriolet RWD 111943		Flexible Coupling	512678
	1996.10-2000.03		Front	Cabriolet RWD 111943		Flexible Coupling Kit	537796S
	1996.10-2000.03		Front	Cabriolet RWD 111943	Chassis no. from:F 094036	Flexible Coupling Kit	537819S
	1996.10-2000.03		Front;Rear	Cabriolet RWD 111943		Flexible Coupling Kit	512673S
SLK230							
2.3 (142 kw)	1996.09-2000.12		Centre	Cabriolet RWD 111973		Center Bearing Support	538666
	1996.09-2000.12		Front	Cabriolet RWD 111973		Flexible Coupling	510571
	1996.09-2000.12		Front;Rear	Cabriolet RWD 111973	AT,Chassis no. to:F 094036	Flexible Coupling	510579
	1996.09-2000.12		Front;Rear	Cabriolet RWD 111973	Chassis no. from:F094037	Flexible Coupling	512678
	1996.09-2000.12		Front	Cabriolet RWD 111973	AT,Chassis no. from:F 094037	Flexible Coupling Kit	510571S
	1996.09-2000.12		Front	Cabriolet RWD 111973	AT,Chassis no. to:F 094036	Flexible Coupling Kit	510580S
	1996.09-2000.12		Front	Cabriolet RWD 111973	MT	Flexible Coupling Kit	537819S
	1996.09-2000.12		Front;Rear	Cabriolet RWD 111973		Flexible Coupling Kit	512673S
2.3 (145 kw)	1999.10-2004.01		Front;Rear	Cabriolet RWD 111983		Flexible Coupling	512678
	1999.10-2004.01		Front	Cabriolet RWD 111983		Flexible Coupling Kit	510580S
	1999.10-2004.01		Front;Rear	Cabriolet RWD 111983		Flexible Coupling Kit	512673S
SLK250							
1.8 (150 kw)	2011.02-		Front;Rear	Cabriolet RWD 271861		Flexible Coupling	512678
	2011.02-		Front;Rear	Cabriolet RWD 271861		Flexible Coupling Kit	512673S
2.2 (150 kw)	2012.01-		Centre	Cabriolet RWD 651980	6AT,7AT	Center Bearing Support	538639
	2012.01-		Rear	Cabriolet RWD 651980	537630 and 538505 different structure	Flexible Coupling	537630
	2012.01-		Rear	Cabriolet RWD 651980	538505 and 537630 different structure	Flexible Coupling	538505
	2012.01-		Front;Rear	Cabriolet RWD 651980		Flexible Coupling	512677
	2012.01-		Front	Cabriolet RWD 651980	6MT;7AT	Flexible Coupling Kit	537794S
	2012.01-		Rear	Cabriolet RWD 651980		Flexible Coupling Kit	538505S
	2012.01-		Front;Rear	Cabriolet RWD 651980		Flexible Coupling Kit	512677S
	2012.01-		Front;Rear	Cabriolet RWD 651980		Flexible Coupling Kit	537630S
SLK280							
3.0 (170 kw)	2005.01-2010.12		Centre	Cabriolet RWD 272942	with bearing	Center Bearing Support	538639
	2005.01-2010.12		Front;Rear	Cabriolet RWD 272942		Flexible Coupling	512678
	2005.01-2010.12		Front;Rear	Cabriolet RWD 272942		Flexible Coupling Kit	512673S
SLK300							
2.0 (180 kw)	2015.07-		Rear	Cabriolet RWD 274920		Flexible Coupling	537630
	2015.07-		Front;Rear	Cabriolet RWD 274920		Flexible Coupling Kit	537630S
3.0 (170 kw)	2009.04-2011.02		Centre	Cabriolet RWD 272942	with bearing	Center Bearing Support	538639
	2009.04-2011.02		Front;Rear	Cabriolet RWD 272942		Flexible Coupling	512678
	2009.04-2011.02		Front;Rear	Cabriolet RWD 272942		Flexible Coupling Kit	512673S
SLK32 AMG							
3.2 (260 kw)	2000.04-2004.01		Centre	Cabriolet RWD 112960	with bearing	Center Bearing Support	538639
	2000.04-2004.01		Front;Rear	Cabriolet RWD 112960		Flexible Coupling	512677
	2000.04-2004.01		Rear	Cabriolet RWD 112960		Flexible Coupling Kit	537794S
	2000.04-2004.01		Front;Rear	Cabriolet RWD 112960		Flexible Coupling Kit	512677S
SLK320							
3.2 (160 kw)	1999.10-2004.01		Centre	Cabriolet RWD 112947	with bearing	Center Bearing Support	538639
	1999.10-2004.01		Front;Rear	Cabriolet RWD 112947		Flexible Coupling	512678
	1999.10-2004.01		Front;Rear	Cabriolet RWD 112947		Flexible Coupling Kit	512673S
SLK350							
3.5 (200 kw)	2004.06-2011.02		Centre	Cabriolet RWD 272963		Center Bearing Support	538639
	2004.06-2011.02		Rear	Cabriolet RWD 272963		Flexible Coupling	538505
	2004.06-2011.02		Front;Rear	Cabriolet RWD 272963		Flexible Coupling	512677
	2004.06-2011.02		Front	Cabriolet RWD 272963		Flexible Coupling Kit	537794S
	2004.06-2011.02		Rear	Cabriolet RWD 272963		Flexible Coupling Kit	538505S
	2004.06-2011.02		Front;Rear	Cabriolet RWD 272963		Flexible Coupling Kit	512677S
3.5 (224 kw)	2008.01-2011.02		Rear	Cabriolet RWD 272969		Flexible Coupling	538505
	2008.01-2011.02		Rear	Cabriolet RWD 272969		Flexible Coupling Kit	538505S
3.5 (225 kw)	2011.01-		Rear	Cabriolet RWD 276956		Flexible Coupling	538505
	2011.01-		Front;Rear	Cabriolet RWD 276956		Flexible Coupling	512677
	2011.01-		Front	Cabriolet RWD 276956	7AT	Flexible Coupling Kit	537794S
	2011.01-		Rear	Cabriolet RWD 276956		Flexible Coupling Kit	538505S
	2011.01-		Front;Rear	Cabriolet RWD 276956		Flexible Coupling Kit	512677S

	YEAR	TRANSM.	FITTING POSITION	BODY STYLE & DRIVE TYPE & ENGINE	REMARKS	PRODUCT	GSP Ref.
MERCEDES-BENZ							
SLK55 AMG							
5.4 (265 kw)	2004.06-2011.12		Centre	Cabriolet RWD 113989		Center Bearing Support	538639
5.5 (310 kw)	2012.01-		Front;Rear	Cabriolet RWD 152980		Flexible Coupling	538513
	2012.01-		Front	Cabriolet RWD 152980		Flexible Coupling Kit	538513S
Sprinter 208D							
2.1 (60 kw)	2000.04-2006.05	AT	Rear	Bus RWD OM 611.987	For Modelcode:902672,Wheelbase:3550 mm	Propshaft	PS900372
	2000.04-2006.05	AT	Rear	Platform/Chassis RWD OM 611.987	For Modelcode:901612,902612,902622,Wheelbase:3550mm	Propshaft	PS900372
	2000.04-2006.05	AT	Rear	Van RWD OM 611.987	For Modelcode:901662,902662,Wheelbase:3550mm	Propshaft	PS900372
	2000.04-2006.05	MT	Rear	Bus RWD OM 611.987		Propshaft	PS900373
	2000.04-2006.05	MT	Rear	Platform/Chassis RWD OM 611.987		Propshaft	PS900373
	2000.04-2006.05	MT	Rear	Van RWD OM 611.987		Propshaft	PS900373
	2000.04-2006.05		Centre	Bus RWD OM 611.987		Center Bearing Support	539009
	2000.04-2006.05		Centre	Platform/Chassis RWD OM 611.987		Center Bearing Support	539009
	2000.04-2006.05		Centre	Van RWD OM 611.987		Center Bearing Support	539009
	2000.04-2006.05		Centre	Bus RWD OM 611.987		Center Bearing Support Kit	538995S
	2000.04-2006.05		Centre	Platform/Chassis RWD OM 611.987		Center Bearing Support Kit	538995S
	2000.04-2006.05		Centre	Van RWD OM 611.987		Center Bearing Support Kit	538995S
2.3 (58 kw)	1995.01-2000.04		Centre	Platform/Chassis RWD OM 601.943		Center Bearing Support	539009
	1995.01-2000.04		Centre	Platform/Chassis RWD OM 601.943		Center Bearing Support Kit	538995S
	1995.02-2000.04		Centre	Bus RWD OM 601.943		Center Bearing Support	539009
	1995.02-2000.04		Centre	Van RWD OM 601.943		Center Bearing Support	539009
	1995.02-2000.04		Centre	Bus RWD OM 601.943		Center Bearing Support Kit	538995S
	1995.02-2000.04		Centre	Van RWD OM 601.943		Center Bearing Support Kit	538995S
2.3 (60 kw)	1996.09-2000.04		Centre	Platform/Chassis RWD OM 601.943		Center Bearing Support	539009
	1996.09-2000.04		Centre	Platform/Chassis RWD OM 601.943		Center Bearing Support Kit	538995S
	1996.10-2000.04		Centre	Van RWD OM 601.943		Center Bearing Support	539009
	1996.10-2000.04		Centre	Van RWD OM 601.943		Center Bearing Support Kit	538995S
Sprinter 209D							
2.2 (65 kw)	2006.06-2009.12	MT	Front	Chassis Cabin RWD 646984	Chassis no. to:N478535/E057183	Propshaft	PS900365
	2006.06-2009.12	6MT	Rear	Van RWD 646984	For Modelcode::906613	Propshaft	PS900550
	2006.06-2009.12	6MT	Rear	Van RWD 646984	For Modelcode::906611	Propshaft	PS901829
	2006.06-2009.12	6MT	Rear	Chassis Cabin RWD 646984	For Modelcode:906211/906213/906111,Trans. code:TSG 370	Propshaft	PS901858
	2006.06-2009.12		Centre	Chassis Cabin RWD 646984		Center Bearing Support	538627
	2006.06-2009.12		Centre	Van RWD 646984		Center Bearing Support	538627
	2006.06-2009.12		Centre	Chassis Cabin RWD 646984		Center Bearing Support	538635
	2006.06-2009.12		Centre	Van RWD 646984		Center Bearing Support	538635
	2006.06-2009.12		Front	Chassis Cabin RWD 646984		Center Bearing Support Kit	538681S
	2006.06-2009.12		Front	Van RWD 646984		Center Bearing Support Kit	538681S
	2006.06-2009.12		Centre	Chassis Cabin RWD 646984		Center Bearing Support Kit	538680S
	2006.06-2009.12		Centre	Van RWD 646984		Center Bearing Support Kit	538680S
	2006.06-2009.12		Centre	Chassis Cabin RWD 646984		Center Bearing Support Kit	538693S
	2006.06-2009.12		Centre	Van RWD 646984		Center Bearing Support Kit	538693S
	2006.06-2009.12		Front;Rear	Chassis Cabin RWD 646984		Flexible Coupling	533884
	2006.06-2009.12		Front;Rear	Van RWD 646984		Flexible Coupling	533884
	2006.06-2009.12		Front;Rear	Chassis Cabin RWD 646984		Flexible Coupling Kit	537832S
	2006.06-2009.12		Front;Rear	Van RWD 646984		Flexible Coupling Kit	537832S
	2012.04-2019.12		Front;Rear	Bus RWD 646984		Flexible Coupling	533884
	2012.04-2019.12		Front;Rear	Bus RWD 646984		Flexible Coupling Kit	537832S
Sprinter 210D							
2.2 (70 kw)	2009.03-2013.12		Centre	Bus RWD 651955/651956		Center Bearing Support	538627
	2009.03-2013.12		Centre	Bus RWD 651955/651956		Center Bearing Support	538635
	2009.03-2013.12		Front	Bus RWD 651955/651956		Center Bearing Support Kit	538681S
	2009.03-2013.12		Centre	Bus RWD 651955/651956		Center Bearing Support Kit	538693S
	2009.03-2013.12		Front;Rear	Bus RWD 651955/651956		Flexible Coupling	533884
	2009.03-2013.12		Front;Rear	Bus RWD 651955/651956		Flexible Coupling Kit	537832S
	2009.03-2016.12	6MT	Rear	Van RWD 651955/651956	Trans. code:TSG 360	Propshaft	PS900550
	2009.03-2016.12	6MT	Rear	Chassis Cabin RWD 651955/651956		Propshaft	PS900550
	2009.03-2016.12	6MT	Rear	Van RWD 651955/651956	Date from:2011.02,Chassis no. from:S 567427/E 056829,Trans. code:NSG 370	Propshaft	PS901367
	2009.03-2016.12	6MT	Rear	Chassis Cabin RWD 651955/651956	Date from:2011.02,Chassis no. from:S 567427/E 056829,Trans. code:NSG 370	Propshaft	PS901367
	2009.03-2016.12	6MT	Rear	Chassis Cabin RWD 651955/651956	Date to:2011.02,Chassis no.from:N 418325,Chassis no.to:N 418535,Transm.Type:TSG 360	Propshaft	PS901684
	2009.03-2016.12	AT	Rear	Van RWD 651955/651956	for OE No.:9064100016	Propshaft	PS900367
	2009.03-2016.12	AT	Rear	Chassis Cabin RWD 651955/651956	for OE No.:9064100016	Propshaft	PS900367
	2009.03-2016.12	AT	Rear	Van RWD 651955/651956	Date from:2011.04,Chassis no. from:56829,from:573459;for OE No.:A9064107816	Propshaft	PS900559
	2009.03-2016.12	AT	Rear	Chassis Cabin RWD 651955/651956	Date from:2011.04,Chassis no. from:56829,from:573459;for OE No.:A9064107816	Propshaft	PS900559
	2009.03-2016.12		Centre	Van RWD 651955/651956		Center Bearing Support	538627

	YEAR	TRANSM.	FITTING POSITION	BODY STYLE & DRIVE TYPE & ENGINE	REMARKS	PRODUCT	GSP Ref.
MERCEDES-BENZ							
Sprinter 210D							
2.2 (70 kw)	2009.03-2016.12		Centre	Chassis Cabin RWD 651955/651956		Center Bearing Support	538627
	2009.03-2016.12		Centre	Van RWD 651955/651956		Center Bearing Support	538635
	2009.03-2016.12		Centre	Chassis Cabin RWD 651955/651956		Center Bearing Support	538635
	2009.03-2016.12		Front	Van RWD 651955/651956		Center Bearing Support Kit	538681S
	2009.03-2016.12		Front	Chassis Cabin RWD 651955/651956		Center Bearing Support Kit	538681S
	2009.03-2016.12		Centre	Van RWD 651955/651956		Center Bearing Support Kit	538680S
	2009.03-2016.12		Centre	Chassis Cabin RWD 651955/651956		Center Bearing Support Kit	538680S
	2009.03-2016.12		Centre	Van RWD 651955/651956		Center Bearing Support Kit	538693S
	2009.03-2016.12		Centre	Chassis Cabin RWD 651955/651956		Center Bearing Support Kit	538693S
	2009.03-2016.12		Front;Rear	Van RWD 651955/651956		Flexible Coupling	533884
	2009.03-2016.12		Front;Rear	Chassis Cabin RWD 651955/651956		Flexible Coupling	533884
	2009.03-2016.12		Front;Rear	Van RWD 651955/651956		Flexible Coupling Kit	537832S
	2009.03-2016.12		Front;Rear	Chassis Cabin RWD 651955/651956		Flexible Coupling Kit	537832S
2.9 (75 kw)	1997.01-2000.04		Centre	Platform/Chassis RWD OM 602.980		Center Bearing Support	539009
	1997.01-2000.04		Centre	Van RWD OM 602.980		Center Bearing Support	539009
	1997.01-2000.04		Centre	Platform/Chassis RWD OM 602.980		Center Bearing Support Kit	538995S
	1997.01-2000.04		Centre	Van RWD OM 602.980		Center Bearing Support Kit	538995S
	1997.03-2000.04		Centre	Bus RWD OM 602.980		Center Bearing Support	539009
	1997.03-2000.04		Centre	Bus RWD OM 602.980		Center Bearing Support Kit	538995S
Sprinter 211D							
2.0 (84 kw)	2020.06-		Centre	Chassis Cabin RWD 654920		Center Bearing Support	538627
	2020.06-		Centre	Chassis Cabin RWD 654920		Center Bearing Support Kit	539925S
	2021.10-		Centre	Bus RWD 654920		Center Bearing Support	538627
	2021.10-		Centre	Bus RWD 654920		Center Bearing Support Kit	538693S
2.1 (80 kw)	2000.04-2006.05	AT	Rear	Bus RWD OM 611.981	For Modelcode:902672,Wheelbase:3550 mm	Propshaft	PS900372
	2000.04-2006.05	AT	Rear	Platform/Chassis RWD OM 611.981	For Modelcode:902612,902622,Wheelbase:3550mm	Propshaft	PS900372
	2000.04-2006.05	AT	Rear	Van RWD OM 611.981	For Modelcode:901662,902662,Wheelbase:3550mm	Propshaft	PS900372
	2000.04-2006.05	MT	Rear	Bus RWD OM 611.981		Propshaft	PS900373
	2000.04-2006.05	MT	Rear	Platform/Chassis RWD OM 611.981		Propshaft	PS900373
	2000.04-2006.05	MT	Rear	Van RWD OM 611.981		Propshaft	PS900373
	2000.04-2006.05		Centre	Bus RWD OM 611.981		Center Bearing Support	539009
	2000.04-2006.05		Centre	Platform/Chassis RWD OM 611.981		Center Bearing Support	539009
	2000.04-2006.05		Centre	Van RWD OM 611.981		Center Bearing Support	539009
	2000.04-2006.05		Centre	Bus RWD OM 611.981		Center Bearing Support Kit	538995S
	2000.04-2006.05		Centre	Platform/Chassis RWD OM 611.981		Center Bearing Support Kit	538995S
	2000.04-2006.05		Centre	Van RWD OM 611.981		Center Bearing Support Kit	538995S
2.2 (80 kw)	2006.06-2009.12	MT	Front	Chassis Cabin RWD 646985	Chassis no. to:N478535/E057183	Propshaft	PS900365
	2006.06-2009.12	6MT	Rear	Bus RWD 646985	Trans. code:TSG 360	Propshaft	PS900550
	2006.06-2009.12	6MT	Rear	Van RWD 646985	For Modelcode::906613	Propshaft	PS900550
	2006.06-2009.12	6MT	Rear	Van RWD 646985	For Modelcode::906611	Propshaft	PS901829
	2006.06-2009.12	6MT	Rear	Chassis Cabin RWD 646985	For Modelcode:906211/906213/906111,Trans. code:TSG 370	Propshaft	PS901858
	2006.06-2009.12	AT	Rear	Bus RWD 646985	for OE No.:9064100016	Propshaft	PS900367
	2006.06-2009.12	AT	Rear	Chassis Cabin RWD 646985	for OE No.:9064100016	Propshaft	PS900367
	2006.06-2009.12	AT/6MT	Rear	Bus RWD 646985	Trans. code:NSG 370/NSG 400;for OE No.:A9064100216	Propshaft	PS901368
	2006.06-2009.12	AT/6MT	Rear	Chassis Cabin RWD 646985	Trans. code:NSG 370/NSG 400;for OE No.:A9064100216	Propshaft	PS901368
	2006.06-2009.12	6MT	-	Chassis Cabin RWD 646985	Trans. code:TSG 360,For Modelcode:906213/906113	Propshaft	PS900550
	2006.06-2009.12		Centre	Bus RWD 646985		Center Bearing Support	538627
	2006.06-2009.12		Centre	Chassis Cabin RWD 646985		Center Bearing Support	538627
	2006.06-2009.12		Centre	Van RWD 646985		Center Bearing Support	538627
	2006.06-2009.12		Centre	Bus RWD 646985		Center Bearing Support	538635
	2006.06-2009.12		Centre	Chassis Cabin RWD 646985		Center Bearing Support	538635
	2006.06-2009.12		Centre	Van RWD 646985		Center Bearing Support	538635
	2006.06-2009.12		Front	Bus RWD 646985		Center Bearing Support Kit	538681S
	2006.06-2009.12		Front	Chassis Cabin RWD 646985		Center Bearing Support Kit	538681S
	2006.06-2009.12		Front	Van RWD 646985		Center Bearing Support Kit	538681S
	2006.06-2009.12		Centre	Bus RWD 646985		Center Bearing Support Kit	538680S
	2006.06-2009.12		Centre	Chassis Cabin RWD 646985		Center Bearing Support Kit	538680S
	2006.06-2009.12		Centre	Van RWD 646985		Center Bearing Support Kit	538680S
	2006.06-2009.12		Centre	Bus RWD 646985		Center Bearing Support Kit	538693S
	2006.06-2009.12		Centre	Chassis Cabin RWD 646985		Center Bearing Support Kit	538693S
	2006.06-2009.12		Centre	Van RWD 646985		Center Bearing Support Kit	538693S
	2006.06-2009.12		Front;Rear	Bus RWD 646985		Flexible Coupling	533884
	2006.06-2009.12		Front;Rear	Chassis Cabin RWD 646985		Flexible Coupling	533884
	2006.06-2009.12		Front;Rear	Van RWD 646985		Flexible Coupling	533884

	YEAR	TRANSM.	FITTING POSITION	BODY STYLE & DRIVE TYPE & ENGINE	REMARKS	PRODUCT	GSP Ref.
MERCEDES-BENZ							
Sprinter 211D							
2.2 (80 kw)	2006.06-2009.12		Front;Rear	Bus RWD 646985		Flexible Coupling Kit	537832S
	2006.06-2009.12		Front;Rear	Chassis Cabin RWD 646985		Flexible Coupling Kit	537832S
	2006.06-2009.12		Front;Rear	Van RWD 646985		Flexible Coupling Kit	537832S
2.2 (84 kw)	2016.04-2018.12	6MT	Rear	Bus RWD 651955/651956	Trans. code:NSG 370	Propshaft	PS901367
	2016.04-2018.12	6MT	Rear	Chassis Cabin RWD 651955/651956	Trans. code:NSG 370	Propshaft	PS901367
	2016.04-2018.12	6MT	Rear	Van RWD 651955/651956	Trans. code:NSG 370	Propshaft	PS901367
	2016.04-2018.12	AT	Rear	Bus RWD 651955/651956		Propshaft	PS900367
	2016.04-2018.12	AT	Rear	Van RWD 651955/651956		Propshaft	PS900367
	2016.04-2018.12	AT	Rear	Chassis Cabin RWD 651955/651956	Model code:906113	Propshaft	PS901965
	2016.04-2018.12		Centre	Bus RWD 651955/651956		Center Bearing Support	538627
	2016.04-2018.12		Centre	Chassis Cabin RWD 651955/651956		Center Bearing Support	538627
	2016.04-2018.12		Centre	Van RWD 651955/651956		Center Bearing Support	538627
	2016.04-2018.12		Centre	Bus RWD 651955/651956		Center Bearing Support	538635
	2016.04-2018.12		Centre	Chassis Cabin RWD 651955/651956		Center Bearing Support	538635
	2016.04-2018.12		Centre	Van RWD 651955/651956		Center Bearing Support	538635
	2016.04-2018.12		Front	Bus RWD 651955/651956		Center Bearing Support Kit	538681S
	2016.04-2018.12		Front	Chassis Cabin RWD 651955/651956		Center Bearing Support Kit	538681S
	2016.04-2018.12		Front	Van RWD 651955/651956		Center Bearing Support Kit	538681S
	2016.04-2018.12		Centre	Bus RWD 651955/651956		Center Bearing Support Kit	538693S
	2016.04-2018.12		Centre	Chassis Cabin RWD 651955/651956		Center Bearing Support Kit	538693S
	2016.04-2018.12		Centre	Van RWD 651955/651956		Center Bearing Support Kit	538693S
	2016.04-2018.12		Front;Rear	Bus RWD 651955/651956		Flexible Coupling	533884
	2016.04-2018.12		Front;Rear	Chassis Cabin RWD 651955/651956		Flexible Coupling	533884
	2016.04-2018.12		Front;Rear	Van RWD 651955/651956		Flexible Coupling	533884
	2016.04-2018.12		Front;Rear	Bus RWD 651955/651956		Flexible Coupling Kit	537832S
	2016.04-2018.12		Front;Rear	Chassis Cabin RWD 651955/651956		Flexible Coupling Kit	537832S
	2016.04-2018.12		Front;Rear	Van RWD 651955/651956		Flexible Coupling Kit	537832S
	2018.02-		Centre	Bus RWD 651958		Center Bearing Support	538627
	2018.02-		Centre	Chassis Cabin RWD 651958		Center Bearing Support	538627
	2018.02-		Centre	Bus RWD 651958		Center Bearing Support Kit	538693S
	2018.02-		Centre	Chassis Cabin RWD 651958		Center Bearing Support Kit	539925S
	2018.02-		Front;Rear	Bus RWD 651958		Flexible Coupling	533884
Sprinter 212D							
2.9 (90 kw)	1995.02-2000.04		Centre	Bus RWD OM 602.980 (02.95-.)		Center Bearing Support	539009
	1995.02-2000.04		Centre	Platform/Chassis RWD OM 602.980 (02.95-.)		Center Bearing Support	539009
	1995.02-2000.04		Centre	Van RWD OM 602.980 (02.95-.)		Center Bearing Support	539009
	1995.02-2000.04		Centre	Bus RWD OM 602.980 (02.95-.)		Center Bearing Support Kit	538995S
	1995.02-2000.04		Centre	Platform/Chassis RWD OM 602.980 (02.95-.)		Center Bearing Support Kit	538995S
	1995.02-2000.04		Centre	Van RWD OM 602.980 (02.95-.)		Center Bearing Support Kit	538995S
Sprinter 213D							
2.1 (95 kw)	2000.04-2006.05	AT	Rear	Bus RWD OM 611.981	For Modelcode:902672,Wheelbase:3550 mm	Propshaft	PS900372
	2000.04-2006.05	AT	Rear	Platform/Chassis RWD OM 611.981	For Modelcode:902612,902622,Wheelbase:3550mm	Propshaft	PS900372
	2000.04-2006.05	AT	Rear	Van RWD OM 611.981	For Modelcode:901662,902662,Wheelbase:3550mm	Propshaft	PS900372
	2000.04-2006.05	MT	Rear	Bus RWD OM 611.981		Propshaft	PS900373
	2000.04-2006.05	MT	Rear	Platform/Chassis RWD OM 611.981		Propshaft	PS900373
	2000.04-2006.05	MT	Rear	Van RWD OM 611.981		Propshaft	PS900373
	2000.04-2006.05		Centre	Bus RWD OM 611.981		Center Bearing Support	539009
	2000.04-2006.05		Centre	Platform/Chassis RWD OM 611.981		Center Bearing Support	539009
	2000.04-2006.05		Centre	Van RWD OM 611.981		Center Bearing Support	539009
	2000.04-2006.05		Centre	Bus RWD OM 611.981		Center Bearing Support Kit	538995S
	2000.04-2006.05		Centre	Platform/Chassis RWD OM 611.981		Center Bearing Support Kit	538995S
	2000.04-2006.05		Centre	Van RWD OM 611.981		Center Bearing Support Kit	538995S
2.2 (95 kw)	2006.06-2009.12	MT	Front	Chassis Cabin RWD 646986	Chassis no. to:N478535/E057183	Propshaft	PS900365
	2006.06-2009.12	6MT	Rear	Chassis Cabin RWD 646986	Trans. code:TSG 360	Propshaft	PS900550
	2006.06-2009.12	6MT	Rear	Van RWD 646986	Trans. code:TSG 360	Propshaft	PS900550
	2006.06-2009.12	AT	Rear	Chassis Cabin RWD 646986		Propshaft	PS900367
	2006.06-2009.12	AT	Rear	Van RWD 646986		Propshaft	PS900367
	2006.06-2009.12		Centre	Chassis Cabin RWD 646986		Center Bearing Support	538627
	2006.06-2009.12		Centre	Van RWD 646986		Center Bearing Support	538627
	2006.06-2009.12		Centre	Chassis Cabin RWD 646986		Center Bearing Support	538635
	2006.06-2009.12		Centre	Van RWD 646986		Center Bearing Support	538635
	2006.06-2009.12		Front	Chassis Cabin RWD 646986		Center Bearing Support Kit	538681S
	2006.06-2009.12		Front	Van RWD 646986		Center Bearing Support Kit	538681S
	2006.06-2009.12		Centre	Chassis Cabin RWD 646986		Center Bearing Support Kit	538680S

	YEAR	TRANSM.	FITTING POSITION	BODY STYLE & DRIVE TYPE & ENGINE	REMARKS	PRODUCT	GSP Ref.
MERCEDES-BENZ							
Sprinter 213D							
2.2 (95 kw)	2006.06-2009.12		Centre	Van RWD 646986		Center Bearing Support Kit	538680S
	2006.06-2009.12		Centre	Chassis Cabin RWD 646986		Center Bearing Support Kit	538693S
	2006.06-2009.12		Centre	Van RWD 646986		Center Bearing Support Kit	538693S
	2006.06-2009.12		Front;Rear	Chassis Cabin RWD 646986		Flexible Coupling	533884
	2006.06-2009.12		Front;Rear	Van RWD 646986		Flexible Coupling	533884
	2006.06-2009.12		Front;Rear	Chassis Cabin RWD 646986		Flexible Coupling Kit	537832S
	2006.06-2009.12		Front;Rear	Van RWD 646986		Flexible Coupling Kit	537832S
	2006.06-2016.12		Centre	Bus RWD 651955/651956/651957		Center Bearing Support	538627
	2006.06-2016.12		Centre	Bus RWD 651955/651956/651957		Center Bearing Support	538635
	2006.06-2016.12		Front	Bus RWD 651955/651956/651957		Center Bearing Support Kit	538681S
	2006.06-2016.12		Centre	Bus RWD 651955/651956/651957		Center Bearing Support Kit	538680S
	2006.06-2016.12		Centre	Bus RWD 651955/651956/651957		Center Bearing Support Kit	538693S
	2006.06-2016.12		Front;Rear	Bus RWD 651955/651956/651957	Engine Code:OM 651.956	Flexible Coupling	533884
	2006.06-2016.12		Front;Rear	Bus RWD 651955/651956/651957		Flexible Coupling Kit	537832S
	2009.03-2016.12	6MT	Rear	Chassis Cabin RWD 651955/651956/651957	Date from:2011.02,Chassis no. from:S 567427/E 056829,Trans. code:NSG 370	Propshaft	PS901367
	2009.03-2016.12	6MT	Rear	Chassis Cabin RWD 651955/651956/651957	Date to:2011.02,Chassis no.from;N 418325,Chassis no.to:N 418535,Transm.Type:TSG 360	Propshaft	PS901684
	2009.03-2016.12		Centre	Chassis Cabin RWD 651955/651956/651957		Center Bearing Support	538627
	2009.03-2016.12		Centre	Chassis Cabin RWD 651955/651956/651957		Center Bearing Support	538635
	2009.03-2016.12		Front	Chassis Cabin RWD 651955/651956/651957		Center Bearing Support Kit	538681S
	2009.03-2016.12		Centre	Chassis Cabin RWD 651955/651956/651957		Center Bearing Support Kit	538680S
	2009.03-2016.12		Centre	Chassis Cabin RWD 651955/651956/651957		Center Bearing Support Kit	538693S
	2009.03-2016.12		Front;Rear	Chassis Cabin RWD 651955/651956/651957	Engine Code:OM 651.956	Flexible Coupling	533884
	2009.03-2016.12		Front;Rear	Chassis Cabin RWD 651955/651956/651957		Flexible Coupling Kit	537832S
	2009.03-2018.06	AT	Front	Van RWD 651955/651956/651957	for OE No.:A9064104801	Propshaft	PS900631
	2009.03-2018.06	6MT	Rear	Van RWD 651955/651956/651957	Date from:2009.03,Trans. code:TSG 360	Propshaft	PS900550
	2009.03-2018.06	6MT	Rear	Van RWD 651955/651956/651957	Date from:2011.02,Chassis no. from:S 567427/E 056829,Trans. code:NSG 370	Propshaft	PS901367
	2009.03-2018.06	AT	Rear	Van RWD 651955/651956/651957	Date from:2009.03;for OE No.:9064100016	Propshaft	PS900367
	2009.03-2018.06	AT	Rear	Van RWD 651955/651956/651957	Date from:2011.04,Chassis no. from:56829,from:573459;for OE No.:A9064107816	Propshaft	PS900559
	2009.03-2018.06		Centre	Van RWD 651955/651956/651957		Center Bearing Support	538627
	2009.03-2018.06		Centre	Van RWD 651955/651956/651957		Center Bearing Support	538635
	2009.03-2018.06		Front	Van RWD 651955/651956/651957		Center Bearing Support Kit	538681S
	2009.03-2018.06		Centre	Van RWD 651955/651956/651957		Center Bearing Support Kit	538680S
	2009.03-2018.06		Centre	Van RWD 651955/651956/651957		Center Bearing Support Kit	538693S
	2009.03-2018.06		Front;Rear	Van RWD 651955/651956/651957		Flexible Coupling	533884
	2009.03-2018.06		Front;Rear	Van RWD 651955/651956/651957		Flexible Coupling Kit	537832S
Sprinter 214							
2.3 (105 kw)	1995.02-2006.05		Centre	Bus RWD M 111.979, M 111.984		Center Bearing Support	539009
	1995.02-2006.05		Centre	Platform/Chassis RWD M 111.979, M 111.984		Center Bearing Support	539009
	1995.02-2006.05		Centre	Van RWD M 111.979, M 111.984		Center Bearing Support	539009
	1995.02-2006.05		Centre	Bus RWD M 111.979, M 111.984		Center Bearing Support Kit	538995S
	1995.02-2006.05		Centre	Platform/Chassis RWD M 111.979, M 111.984		Center Bearing Support Kit	538995S
	1995.02-2006.05		Centre	Van RWD M 111.979, M 111.984		Center Bearing Support Kit	538995S
Sprinter 214 NGT							
2.3 (95 kw)	1995.02-2006.05		Centre	Bus RWD M 111.979, M 111.984		Center Bearing Support	539009
	1995.02-2006.05		Centre	Platform/Chassis RWD M 111.979, M 111.984		Center Bearing Support	539009
	1995.02-2006.05		Centre	Van RWD M 111.979, M 111.984		Center Bearing Support	539009
	1995.02-2006.05		Centre	Bus RWD M 111.979, M 111.984		Center Bearing Support Kit	538995S
	1995.02-2006.05		Centre	Platform/Chassis RWD M 111.979, M 111.984		Center Bearing Support Kit	538995S
	1995.02-2006.05		Centre	Van RWD M 111.979, M 111.984		Center Bearing Support Kit	538995S
Sprinter 214D							
2.2 (105 kw)	2016.04-2018.12	6MT	Rear	Bus RWD 651955/651956	Trans. code:NSG 370	Propshaft	PS901367
	2016.04-2018.12	6MT	Rear	Chassis Cabin RWD 651955/651956	Trans. code:NSG 370	Propshaft	PS901367
	2016.04-2018.12	AT	Rear	Bus RWD 651955/651956		Propshaft	PS900367
	2016.04-2018.12	AT	Rear	Chassis Cabin RWD 651955/651956		Propshaft	PS900367
	2016.04-2018.12		Centre	Bus RWD 651955/651956		Center Bearing Support	538627
	2016.04-2018.12		Centre	Chassis Cabin RWD 651955/651956		Center Bearing Support	538627
	2016.04-2018.12		Centre	Bus RWD 651955/651956		Center Bearing Support	538635
	2016.04-2018.12		Centre	Chassis Cabin RWD 651955/651956		Center Bearing Support	538635
	2016.04-2018.12		Front	Bus RWD 651955/651956		Center Bearing Support Kit	538681S
	2016.04-2018.12		Front	Chassis Cabin RWD 651955/651956		Center Bearing Support Kit	538681S
	2016.04-2018.12		Centre	Bus RWD 651955/651956		Center Bearing Support Kit	538693S
	2016.04-2018.12		Centre	Chassis Cabin RWD 651955/651956		Center Bearing Support Kit	538693S
	2016.04-2018.12		Front;Rear	Bus RWD 651955/651956		Flexible Coupling	533884
	2016.04-2018.12		Front;Rear	Chassis Cabin RWD 651955/651956		Flexible Coupling	533884

	YEAR	TRANSM.	FITTING POSITION	BODY STYLE & DRIVE TYPE & ENGINE	REMARKS	PRODUCT	GSP Ref.
MERCEDES-BENZ							
Sprinter 214D							
2.2 (105 kw)	2016.04-2018.12		Front;Rear	Bus RWD 651955/651956		Flexible Coupling Kit	537832S
	2016.04-2018.12		Front;Rear	Chassis Cabin RWD 651955/651956		Flexible Coupling Kit	537832S
	2016.05-2018.12	6MT	Rear	Van RWD 651955/651956	Trans. code:NSG 370;for OE No.:A9064102116	Propshaft	PS900368
	2016.05-2018.12	6MT	Rear	Van RWD 651955/651956	Trans. code:NSG 370;for OE No.:A9064100006	Propshaft	PS901367
	2016.05-2018.12	AT	Rear	Van RWD 651955/651956		Propshaft	PS900367
	2016.05-2018.12		Centre	Van RWD 651955/651956		Center Bearing Support	538627
	2016.05-2018.12		Centre	Van RWD 651955/651956		Center Bearing Support	538635
	2016.05-2018.12		Front	Van RWD 651955/651956		Center Bearing Support Kit	538681S
	2016.05-2018.12		Centre	Van RWD 651955/651956		Center Bearing Support Kit	538693S
	2016.05-2018.12		Front;Rear	Van RWD 651955/651956		Flexible Coupling	533884
	2016.05-2018.12		Front;Rear	Van RWD 651955/651956		Flexible Coupling Kit	537832S
	2018.02-		Centre	Bus RWD 651958		Center Bearing Support	538627
	2018.02-		Centre	Chassis Cabin RWD 651958		Center Bearing Support	538627
	2018.02-		Centre	Bus RWD 651958		Center Bearing Support Kit	538693S
	2018.02-		Centre	Chassis Cabin RWD 651958		Center Bearing Support Kit	539925S
	2018.02-		Front;Rear	Bus RWD 651958		Flexible Coupling	533884
Sprinter 215D							
2.0 (110 kw)	2020.06-		Centre	Chassis Cabin RWD 654920		Center Bearing Support	538627
	2020.06-		Centre	Chassis Cabin RWD 654920		Center Bearing Support Kit	539925S
	2021.10-		Centre	Bus RWD 654920		Center Bearing Support	538627
	2021.10-		Centre	Bus RWD 654920		Center Bearing Support Kit	538693S
2.2 (110 kw)	2006.06-2009.12	MT	Front	Chassis Cabin RWD 646986/646989/646990	Chassis no. to:N478535/E057183	Propshaft	PS900365
	2006.06-2009.12	6MT	Rear	Bus RWD 646986/646989/646990	Trans. code:TSG 360;for OE NO.:A9064105806	Propshaft	PS900550
	2006.06-2009.12	6MT	Rear	Van RWD 646986/646989/646990	For Modelcode::906613,Without Control code, rear axle crown gear 215	Propshaft	PS900550
	2006.06-2009.12	6MT	Rear	Bus RWD 646986/646989/646990	Chassis no. to:S 567427/E 058829,Engine Code:OM 651 DE22 LA,Trans. code:TSG 360,For OE no.:A9064105806	Propshaft	PS901365
	2006.06-2009.12	6MT	Rear	Van RWD 646986/646989/646990	For Modelcode::906613,With Control code, rear axle crown gear 215	Propshaft	PS901365
	2006.06-2009.12	6MT	Rear	Van RWD 646986/646989/646990	For Modelcode::906611	Propshaft	PS901829
	2006.06-2009.12	6MT	Rear	Bus RWD 646986/646989/646990	For Modelcode:906711,Trans. code:TSG 370	Propshaft	PS901858
	2006.06-2009.12	6MT	Rear	Chassis Cabin RWD 646986/646989/646990	For Modelcode:906211/906213/906111,Trans. code:TSG 370	Propshaft	PS901858
	2006.06-2009.12	AT	Rear	Bus RWD 646986/646989/646990		Propshaft	PS900367
	2006.06-2009.12	AT	Rear	Chassis Cabin RWD 646986/646989/646990		Propshaft	PS900367
	2006.06-2009.12	6MT	-	Chassis Cabin RWD 646986/646989/646990	Trans. code:TSG 360,For Modelcode:906213/906113	Propshaft	PS900550
	2006.06-2009.12	6MT	-	Chassis Cabin RWD 646986/646989/646990	Trans. code:TSG 360,For Modelcode:906213/906113	Propshaft	PS901365
	2006.06-2009.12		Centre	Bus RWD 646986/646989/646990		Center Bearing Support	538627
	2006.06-2009.12		Centre	Chassis Cabin RWD 646986/646989/646990		Center Bearing Support	538627
	2006.06-2009.12		Centre	Van RWD 646986/646989/646990		Center Bearing Support	538627
	2006.06-2009.12		Centre	Bus RWD 646986/646989/646990		Center Bearing Support	538635
	2006.06-2009.12		Centre	Chassis Cabin RWD 646986/646989/646990		Center Bearing Support	538635
	2006.06-2009.12		Centre	Van RWD 646986/646989/646990		Center Bearing Support	538635
	2006.06-2009.12		Front	Bus RWD 646986/646989/646990		Center Bearing Support Kit	538681S
	2006.06-2009.12		Front	Chassis Cabin RWD 646986/646989/646990		Center Bearing Support Kit	538681S
	2006.06-2009.12		Front	Van RWD 646986/646989/646990		Center Bearing Support Kit	538681S
	2006.06-2009.12		Centre	Bus RWD 646986/646989/646990		Center Bearing Support Kit	538680S
	2006.06-2009.12		Centre	Chassis Cabin RWD 646986/646989/646990		Center Bearing Support Kit	538680S
	2006.06-2009.12		Centre	Van RWD 646986/646989/646990		Center Bearing Support Kit	538680S
	2006.06-2009.12		Centre	Bus RWD 646986/646989/646990		Center Bearing Support Kit	538693S
	2006.06-2009.12		Centre	Chassis Cabin RWD 646986/646989/646990		Center Bearing Support Kit	538693S
	2006.06-2009.12		Centre	Van RWD 646986/646989/646990		Center Bearing Support Kit	538693S
	2006.06-2009.12		Front;Rear	Bus RWD 646986/646989/646990		Flexible Coupling	533884
	2006.06-2009.12		Front;Rear	Chassis Cabin RWD 646986/646989/646990		Flexible Coupling	533884
	2006.06-2009.12		Front;Rear	Van RWD 646986/646989/646990		Flexible Coupling	533884
	2006.06-2009.12		Front;Rear	Bus RWD 646986/646989/646990		Flexible Coupling Kit	537832S
	2006.06-2009.12		Front;Rear	Chassis Cabin RWD 646986/646989/646990		Flexible Coupling Kit	537832S
	2006.06-2009.12		Front;Rear	Van RWD 646986/646989/646990		Flexible Coupling Kit	537832S
Sprinter 216							
1.8 (115 kw)	2008.09-2018.12	6MT	Rear	Van RWD 271951	Date from:2011.02,Chassis no. from:S 567427/E 058829,Trans. code:NSG 370	Propshaft	PS901367
	2008.09-2018.12	6MT	Rear	Chassis Cabin RWD 271951		Propshaft	PS901986
	2008.09-2018.12	AT	Rear	Chassis Cabin RWD 271951		Propshaft	PS901983
	2008.09-2018.12		Centre	Chassis Cabin RWD 271951		Center Bearing Support	538627
	2008.09-2018.12		Centre	Van RWD 271951		Center Bearing Support	538627
	2008.09-2018.12		Centre	Chassis Cabin RWD 271951		Center Bearing Support	538635
	2008.09-2018.12		Centre	Van RWD 271951		Center Bearing Support	538635
	2008.09-2018.12		Centre	Chassis Cabin RWD 271951		Center Bearing Support Kit	538693S
	2008.09-2018.12		Centre	Van RWD 271951		Center Bearing Support Kit	538693S

	YEAR	TRANSM.	FITTING POSITION	BODY STYLE & DRIVE TYPE & ENGINE	REMARKS	PRODUCT	GSP Ref.
MERCEDES-BENZ							
Sprinter 216							
1.8 (115 kw)	2008.09-2018.12		Front;Rear	Chassis Cabin RWD 271951		Flexible Coupling	533884
	2008.09-2018.12		Front;Rear	Van RWD 271951		Flexible Coupling	533884
	2008.09-2018.12		Front;Rear	Chassis Cabin RWD 271951		Flexible Coupling Kit	537832S
	2008.09-2018.12		Front;Rear	Van RWD 271951		Flexible Coupling Kit	537832S
	2009.03-2018.12	6MT	Rear	Bus RWD 271951	Date from:2011.02,Chassis no. from:S 567427/E 056829,Trans. code:NSG 370	Propshaft	PS901367
	2009.03-2018.12		Centre	Bus RWD 271951		Center Bearing Support	538627
	2009.03-2018.12		Centre	Bus RWD 271951		Center Bearing Support	538635
	2009.03-2018.12		Centre	Bus RWD 271951		Center Bearing Support Kit	538693S
	2009.03-2018.12		Front;Rear	Bus RWD 271951		Flexible Coupling	533884
	2009.03-2018.12		Front;Rear	Bus RWD 271951		Flexible Coupling Kit	537832S
Sprinter 216D							
2.2 (120 kw)	2009.03-2018.12	6MT	Rear	Van RWD 651955/651956/651957	Trans. code:TSG 360	Propshaft	PS900380
	2009.03-2018.12	6MT	Rear	Chassis Cabin RWD 651955/651956/651957		Propshaft	PS900380
	2009.03-2018.12	6MT	Rear	Van RWD 651955/651956/651957	Date from:2011.02,Chassis no. from:S 567427/E 056829,Trans. code:NSG 370	Propshaft	PS901367
	2009.03-2018.12	6MT	Rear	Chassis Cabin RWD 651955/651956/651957	Date from:2011.02,Chassis no. from:S 567427/E 056829,Trans. code:NSG 370	Propshaft	PS901367
	2009.03-2018.12	6MT	Rear	Chassis Cabin RWD 651955/651956/651957	Date to:2011.02,Chassis no.from:N 418325,Chassis no.to:N 418535,Transm.Type:TSG 360	Propshaft	PS901684
	2009.03-2018.12	AT	Rear	Van RWD 651955/651956/651957	Chassis no. from:56829,from 573459	Propshaft	PS900378
	2009.03-2018.12	AT	Rear	Chassis Cabin RWD 651955/651956/651957	Chassis no. from:56829,from 573459	Propshaft	PS900378
	2009.03-2018.12		Centre	Van RWD 651955/651956/651957		Center Bearing Support	538627
	2009.03-2018.12		Centre	Chassis Cabin RWD 651955/651956/651957		Center Bearing Support	538627
	2009.03-2018.12		Centre	Van RWD 651955/651956/651957		Center Bearing Support	538635
	2009.03-2018.12		Centre	Chassis Cabin RWD 651955/651956/651957		Center Bearing Support	538635
	2009.03-2018.12		Front	Van RWD 651955/651956/651957		Center Bearing Support Kit	538681S
	2009.03-2018.12		Front	Chassis Cabin RWD 651955/651956/651957		Center Bearing Support Kit	538681S
	2009.03-2018.12		Rear	Van RWD 651955/651956/651957	Inner diameter:30mm	Center Bearing Support Kit	538688S
	2009.03-2018.12		Rear	Chassis Cabin RWD 651955/651956/651957	Inner diameter:30mm	Center Bearing Support Kit	538688S
	2009.03-2018.12		Centre	Van RWD 651955/651956/651957	Inner diameter:47mm	Center Bearing Support Kit	538680S
	2009.03-2018.12		Centre	Chassis Cabin RWD 651955/651956/651957	Inner diameter:47mm	Center Bearing Support Kit	538680S
	2009.03-2018.12		Centre	Van RWD 651955/651956/651957		Center Bearing Support Kit	538693S
	2009.03-2018.12		Centre	Chassis Cabin RWD 651955/651956/651957		Center Bearing Support Kit	538693S
	2009.03-2018.12		Front;Rear	Van RWD 651955/651956/651957		Flexible Coupling	533884
	2009.03-2018.12		Front;Rear	Chassis Cabin RWD 651955/651956/651957		Flexible Coupling	533884
	2009.03-2018.12		Front;Rear	Van RWD 651955/651956/651957		Flexible Coupling Kit	537832S
	2009.03-2018.12		Front;Rear	Chassis Cabin RWD 651955/651956/651957		Flexible Coupling Kit	537832S
	2009.06-2018.12	6MT	Rear	Bus RWD 651955/651956/651957	Trans. code:TSG 360,Date from:2009.06	Propshaft	PS900380
	2009.06-2018.12	6MT	Rear	Bus RWD 651955/651956/651957	Date from:2011.02,Chassis no. from:S 567427/E 056829,Trans. code:NSG 370	Propshaft	PS901367
	2009.06-2018.12	AT	Rear	Bus RWD 651955/651956/651957	Date from:2009.06,Chassis no. from:56829,from 573459	Propshaft	PS900378
	2009.06-2018.12		Centre	Bus RWD 651955/651956/651957		Center Bearing Support	538627
	2009.06-2018.12		Centre	Bus RWD 651955/651956/651957		Center Bearing Support	538635
	2009.06-2018.12		Front	Bus RWD 651955/651956/651957		Center Bearing Support Kit	538681S
	2009.06-2018.12		Rear	Bus RWD 651955/651956/651957	Inner diameter:30mm	Center Bearing Support Kit	538688S
	2009.06-2018.12		Centre	Bus RWD 651955/651956/651957	Inner diameter:47mm	Center Bearing Support Kit	538680S
	2009.06-2018.12		Centre	Bus RWD 651955/651956/651957		Center Bearing Support Kit	538693S
	2009.06-2018.12		Front;Rear	Bus RWD 651955/651956/651957		Flexible Coupling	533884
	2009.06-2018.12		Front;Rear	Bus RWD 651955/651956/651957		Flexible Coupling Kit	537832S
	2018.02-		Centre	Chassis Cabin RWD 651958		Center Bearing Support	538627
	2018.02-		Centre	Chassis Cabin RWD 651958		Center Bearing Support Kit	539925S
	2018.02-2021.12		Centre	Bus RWD OM 651.958		Center Bearing Support	538627
	2018.02-2021.12		Centre	Bus RWD OM 651.958		Center Bearing Support Kit	538693S
2.7 (115 kw)	2000.04-2006.05		Centre	Bus RWD OM 612.981		Center Bearing Support	539009
	2000.04-2006.05		Centre	Platform/Chassis RWD OM 612.981		Center Bearing Support	539009
	2000.04-2006.05		Centre	Van RWD OM 612.981		Center Bearing Support	539009
	2000.04-2006.05		Centre	Bus RWD OM 612.981		Center Bearing Support Kit	538995S
	2000.04-2006.05		Centre	Platform/Chassis RWD OM 612.981		Center Bearing Support Kit	538995S
	2000.04-2006.05		Centre	Van RWD OM 612.981		Center Bearing Support Kit	538995S
Sprinter 217D							
2.0 (125 kw)	2020.06-		Centre	Chassis Cabin RWD 654920		Center Bearing Support	538627
	2020.06-		Centre	Chassis Cabin RWD 654920		Center Bearing Support Kit	539925S
	2021.10-		Centre	Bus RWD 654920		Center Bearing Support	538627
	2021.10-		Centre	Bus RWD 654920		Center Bearing Support Kit	538693S
Sprinter 218D							
3.0 (135 kw)	2006.06-2009.12	6MT	Rear	Van RWD 642896/642992	For Modelcode::906611	Propshaft	PS901829
	2006.06-2009.12	6MT	Rear	Chassis Cabin RWD 642896/642992/642993	For Modelcode:906211/906213/906111,Trans. code:TSG 370	Propshaft	PS901858
	2006.06-2009.12	AT	Rear	Chassis Cabin RWD 642896/642992/642993		Propshaft	PS900369

	YEAR	TRANSM.	FITTING POSITION	BODY STYLE & DRIVE TYPE & ENGINE	REMARKS	PRODUCT	GSP Ref.
MERCEDES-BENZ							
Sprinter 218D							
3.0 (135 kw)	2006.06-2009.12	AT	Rear	Van RWD 642896/642992	For Modelcode::906613,wheel base:3665 mm	Propshaft	PS900369
	2006.06-2009.12		Centre	Chassis Cabin RWD 642896/642992/642993		Center Bearing Support	538627
	2006.06-2009.12		Centre	Van RWD 642896/642992		Center Bearing Support	538627
	2006.06-2009.12		Centre	Chassis Cabin RWD 642896/642992/642993		Center Bearing Support	538635
	2006.06-2009.12		Centre	Van RWD 642896/642992		Center Bearing Support	538635
	2006.06-2009.12		Centre	Chassis Cabin RWD 642896/642992/642993		Center Bearing Support Kit	538680S
	2006.06-2009.12		Centre	Van RWD 642896/642992		Center Bearing Support Kit	538680S
	2006.06-2009.12		Centre	Chassis Cabin RWD 642896/642992/642993		Center Bearing Support Kit	538693S
	2006.06-2009.12		Centre	Van RWD 642896/642992		Center Bearing Support Kit	538693S
	2006.06-2009.12		Front;Rear	Chassis Cabin RWD 642896/642992/642993		Flexible Coupling	533884
	2006.06-2009.12		Front;Rear	Van RWD 642896/642992		Flexible Coupling	533884
	2006.06-2009.12		Front;Rear	Chassis Cabin RWD 642896/642992/642993		Flexible Coupling Kit	537832S
	2006.06-2009.12		Front;Rear	Van RWD 642896/642992		Flexible Coupling Kit	537832S
	2012.04-2018.12	6MT	Rear	Bus RWD 642896/642992/642993	For Modelcode:906711,Trans. code:TSG 370	Propshaft	PS901858
	2012.04-2018.12		Front;Rear	Bus RWD 642896/642992/642993		Flexible Coupling	533884
	2012.04-2018.12		Front;Rear	Bus RWD 642896/642992/642993		Flexible Coupling Kit	537832S
Sprinter 219D							
3.0 (140 kw)	2009.03-2018.12	AT	Front	Van RWD 642896/642992	Wheelbase:4325 mm	Propshaft	PS901444
	2009.03-2018.12	AT	Front	Chassis Cabin RWD 642896/642992	Wheelbase:4325 mm	Propshaft	PS901444
	2009.03-2018.12	6MT	Rear	Van RWD 642896/642992	Date from:2011.02,Chassis no. from:S 567427/E 056829,Trans. code:NSG 370	Propshaft	PS901367
	2009.03-2018.12	6MT	Rear	Chassis Cabin RWD 642896/642992	Date from:2011.02,Chassis no. from:S 567427/E 056829,Trans. code:NSG 370	Propshaft	PS901367
	2009.03-2018.12	AT	Rear	Van RWD 642896/642992	Wheelbase:3665 mm	Propshaft	PS900369
	2009.03-2018.12	AT	Rear	Van RWD 642896/642992	Wheelbase:4325 mm,two parts	Propshaft	PS901369
	2009.03-2018.12	AT	Rear	Chassis Cabin RWD 642896/642992	Wheelbase:4325 mm,two parts	Propshaft	PS901369
	2009.03-2018.12	AT	Rear	Van RWD 642896/642992	Wheelbase:4325 mm,three parts	Propshaft	PS901445
	2009.03-2018.12	AT	Rear	Chassis Cabin RWD 642896/642992	Wheelbase:4325 mm,three parts	Propshaft	PS901445
	2009.03-2018.12		Centre	Van RWD 642896/642992		Center Bearing Support	538627
	2009.03-2018.12		Centre	Chassis Cabin RWD 642896/642992		Center Bearing Support	538627
	2009.03-2018.12		Centre	Van RWD 642896/642992		Center Bearing Support	538635
	2009.03-2018.12		Centre	Chassis Cabin RWD 642896/642992		Center Bearing Support	538635
	2009.03-2018.12		Centre	Van RWD 642896/642992		Center Bearing Support Kit	538680S
	2009.03-2018.12		Centre	Chassis Cabin RWD 642896/642992		Center Bearing Support Kit	538680S
	2009.03-2018.12		Centre	Van RWD 642896/642992		Center Bearing Support Kit	538693S
	2009.03-2018.12		Centre	Chassis Cabin RWD 642896/642992		Center Bearing Support Kit	538693S
	2009.03-2018.12		Front;Rear	Van RWD 642896/642992		Flexible Coupling	533884
	2009.03-2018.12		Front;Rear	Chassis Cabin RWD 642896/642992		Flexible Coupling	533884
	2009.03-2018.12		Front;Rear	Van RWD 642896/642992		Flexible Coupling Kit	537832S
	2009.03-2018.12		Front;Rear	Chassis Cabin RWD 642896/642992		Flexible Coupling Kit	537832S
Sprinter 224							
3.5 (190 kw)	2006.06-2013.12		Centre	Bus RWD 272979		Center Bearing Support	538627
	2006.06-2013.12		Centre	Bus RWD 272979		Center Bearing Support	538635
	2006.06-2013.12		Centre	Bus RWD 272979		Center Bearing Support Kit	538680S
	2006.06-2013.12		Centre	Bus RWD 272979		Center Bearing Support Kit	538693S
	2006.06-2013.12		Front;Rear	Bus RWD 272979		Flexible Coupling	533884
	2006.06-2013.12		Front;Rear	Bus RWD 272979		Flexible Coupling Kit	537832S
	2006.06-2016.12		Centre	Chassis Cabin RWD 272979		Center Bearing Support	538627
	2006.06-2016.12		Centre	Van RWD 272979		Center Bearing Support	538627
	2006.06-2016.12		Centre	Chassis Cabin RWD 272979		Center Bearing Support	538635
	2006.06-2016.12		Centre	Van RWD 272979		Center Bearing Support	538635
	2006.06-2016.12		Centre	Chassis Cabin RWD 272979		Center Bearing Support Kit	538680S
	2006.06-2016.12		Centre	Van RWD 272979		Center Bearing Support Kit	538680S
	2006.06-2016.12		Centre	Chassis Cabin RWD 272979		Center Bearing Support Kit	538693S
	2006.06-2016.12		Centre	Van RWD 272979		Center Bearing Support Kit	538693S
	2006.06-2016.12		Front;Rear	Chassis Cabin RWD 272979		Flexible Coupling	533884
	2006.06-2016.12		Front;Rear	Van RWD 272979		Flexible Coupling	533884
	2006.06-2016.12		Front;Rear	Chassis Cabin RWD 272979		Flexible Coupling Kit	537832S
	2006.06-2016.12		Front;Rear	Van RWD 272979		Flexible Coupling Kit	537832S
Sprinter 308D							
2.1 (60 kw)	2000.04-2006.05	AT	Rear	Platform/Chassis RWD OM 611.987	For Modelcode:903612,903622,Wheelbase:3550mm	Propshaft	PS900372
	2000.04-2006.05	AT	Rear	Bus RWD OM 611.987	For Modelcode:903672,Wheelbase:3550mm	Propshaft	PS900372
	2000.04-2006.05	AT	Rear	Van RWD OM 611.987	For Modelcode:903662,Wheelbase:3550mm	Propshaft	PS900372
	2000.04-2006.05	MT	Rear	Platform/Chassis RWD OM 611.987		Propshaft	PS900373
	2000.04-2006.05	MT	Rear	Bus RWD OM 611.987		Propshaft	PS900373
	2000.04-2006.05	MT	Rear	Van RWD OM 611.987		Propshaft	PS900373

	YEAR	TRANSM.	FITTING POSITION	BODY STYLE & DRIVE TYPE & ENGINE	REMARKS	PRODUCT	GSP Ref.
MERCEDES-BENZ							
Sprinter 308D							
2.1 (60 kw)	2000.04-2006.05		Centre	Platform/Chassis RWD OM 611.987		Center Bearing Support	539009
	2000.04-2006.05		Centre	Bus RWD OM 611.987		Center Bearing Support	539009
	2000.04-2006.05		Centre	Van RWD OM 611.987		Center Bearing Support	539009
	2000.04-2006.05		Centre	Platform/Chassis RWD OM 611.987		Center Bearing Support Kit	538995S
	2000.04-2006.05		Centre	Bus RWD OM 611.987		Center Bearing Support Kit	538995S
	2000.04-2006.05		Centre	Van RWD OM 611.987		Center Bearing Support Kit	538995S
2.3 (58 kw)	1995.02-2000.04		Centre	Bus RWD OM 601.943		Center Bearing Support	539009
	1995.02-2000.04		Centre	Van RWD OM 601.943		Center Bearing Support	539009
	1995.02-2000.04		Centre	Platform/Chassis RWD OM 601.943		Center Bearing Support	539009
	1995.02-2000.04		Centre	Bus RWD OM 601.943		Center Bearing Support Kit	538995S
	1995.02-2000.04		Centre	Van RWD OM 601.943		Center Bearing Support Kit	538995S
	1995.02-2000.04		Centre	Platform/Chassis RWD OM 601.943		Center Bearing Support Kit	538995S
2.3 (60 kw)	1995.02-2000.04		Centre	Van RWD OM 601.943		Center Bearing Support	539009
	1995.02-2000.04		Centre	Van RWD OM 601.943		Center Bearing Support Kit	538995S
	1996.11-2000.04		Centre	Platform/Chassis RWD OM 601.943		Center Bearing Support	539009
	1996.11-2000.04		Centre	Platform/Chassis RWD OM 601.943		Center Bearing Support Kit	538995S
	1997.03-2000.04		Centre	Bus RWD OM 601.943		Center Bearing Support Kit	538995S
Sprinter 308E							
ET (40 kw)	1996.01-2006.05		Centre	Bus RWD		Center Bearing Support	539009
	1996.01-2006.05		Centre	Bus RWD		Center Bearing Support Kit	538995S
Sprinter 309D							
2.2 (65 kw)	2006.06-2009.12	MT	Front	Chassis Cabin RWD 646984	Chassis no. to:N478535/E057183	Propshaft	PS900365
	2006.06-2009.12	MT	Front	Van RWD 646984	Chassis no. to:N478535/E057183	Propshaft	PS900365
	2006.06-2009.12	6MT	Rear	Chassis Cabin RWD 646984	Trans. code:NSG 370;for OE No.:A9064102116	Propshaft	PS900368
	2006.06-2009.12	6MT	Rear	Van RWD 646984	For Modelcode::906633,Trans. code:NSG 370	Propshaft	PS900368
	2006.06-2009.12	6MT	Rear	Chassis Cabin RWD 646984	Trans. code:TSG 360	Propshaft	PS900550
	2006.06-2009.12	6MT	Rear	Van RWD 646984	For Modelcode::906633,Trans. code:ECO GEAR 360	Propshaft	PS900550
	2006.06-2009.12	6MT	Rear	Chassis Cabin RWD 646984	Trans. code:ZF 6S-450	Propshaft	PS900558
	2006.06-2009.12	6MT	Rear	Van RWD 646984	For Modelcode::906635/906637	Propshaft	PS900558
	2006.06-2009.12	6MT	Rear	Van RWD 646984	For Modelcode::906635/906637,wheel base:4325 mm	Propshaft	PS901368
	2006.06-2009.12	6MT	Rear	Van RWD 646984	For Modelcode::906631	Propshaft	PS901829
	2006.06-2009.12	AT	Rear	Van RWD 646984	For Modelcode:906.635/906.637	Propshaft	PS900367
	2006.06-2009.12	AT	Rear	Van RWD 646984	For Modelcode:906.635/906.637	Propshaft	PS901591
	2006.06-2009.12	AT/6MT	Rear	Chassis Cabin RWD 646984	Trans. code:NSG 370/NSG 400;for OE No.:A9064100216	Propshaft	PS901368
	2006.06-2009.12		Front	Chassis Cabin RWD 646984		Center Bearing Support	538649
	2006.06-2009.12		Centre	Chassis Cabin RWD 646984		Center Bearing Support	538627
	2006.06-2009.12		Centre	Van RWD 646984		Center Bearing Support	538627
	2006.06-2009.12		Centre	Chassis Cabin RWD 646984		Center Bearing Support	538635
	2006.06-2009.12		Centre	Van RWD 646984		Center Bearing Support	538635
	2006.06-2009.12		Front	Chassis Cabin RWD 646984		Center Bearing Support Kit	538681S
	2006.06-2009.12		Front	Van RWD 646984		Center Bearing Support Kit	538681S
	2006.06-2009.12		Centre	Chassis Cabin RWD 646984		Center Bearing Support Kit	538680S
	2006.06-2009.12		Centre	Van RWD 646984		Center Bearing Support Kit	538680S
	2006.06-2009.12		Centre	Chassis Cabin RWD 646984		Center Bearing Support Kit	538693S
	2006.06-2009.12		Centre	Van RWD 646984		Center Bearing Support Kit	538693S
	2006.06-2009.12		Front;Rear	Chassis Cabin RWD 646984		Flexible Coupling	533884
	2006.06-2009.12		Front;Rear	Van RWD 646984		Flexible Coupling	533884
	2006.06-2009.12		Front;Rear	Chassis Cabin RWD 646984		Flexible Coupling Kit	537832S
	2006.06-2009.12		Front;Rear	Van RWD 646984		Flexible Coupling Kit	537832S
	2012.04-2019.12		Rear	Bus RWD 646984	For Modelcode:906.735	Propshaft	PS901591
	2012.04-2019.12		Front;Rear	Bus RWD 646984		Flexible Coupling	533884
	2012.04-2019.12		Front;Rear	Bus RWD 646984		Flexible Coupling Kit	537832S
Sprinter 310D							
2.2 (70 kw)	2009.03-2013.12	6MT	Front	Bus RWD 651955/651956	Date from:2011.02,Chassis no. from:S 567427,Trans. code:NSG 400	Propshaft	PS901674
	2009.03-2013.12	AT	Front	Bus RWD 651955/651956	Chassis no. from:S567427,Chassis no. to:S567426/E056828;Wheelbase:3250 mm	Propshaft	PS901464
	2009.03-2013.12	6MT	Rear	Bus RWD 651955/651956	Trans. code:NSG 370;for OE No.:A9064102116	Propshaft	PS900368
	2009.03-2013.12	6MT	Rear	Bus RWD 651955/651956	Trans. code:TSG 360	Propshaft	PS900550
	2009.03-2013.12	6MT	Rear	Bus RWD 651955/651956	Trans. code:ZF 6S-450	Propshaft	PS900558
	2009.03-2013.12	6MT	Rear	Bus RWD 651955/651956	Date from:2011.02,Chassis no. from:S 567427/E056829,Trans. code:NSG 370;for OE No.:A9064100056	Propshaft	PS901367
	2009.03-2013.12	AT	Rear	Bus RWD 651955/651956	for OE No.:9064100016	Propshaft	PS900367
	2009.03-2013.12	AT	Rear	Bus RWD 651955/651956	Date from:2011.04,Chassis no. from:56829;for OE No.:A9064102616	Propshaft	PS900559
	2009.03-2013.12		Centre	Bus RWD 651955/651956		Center Bearing Support	538627
	2009.03-2013.12		Centre	Bus RWD 651955/651956		Center Bearing Support	538635
	2009.03-2013.12		Front	Bus RWD 651955/651956		Center Bearing Support Kit	538681S

	YEAR	TRANSM.	FITTING POSITION	BODY STYLE & DRIVE TYPE & ENGINE	REMARKS	PRODUCT	GSP Ref.
MERCEDES-BENZ							
Sprinter 310D							
2.2 (70 kw)	2009.03-2013.12		Centre	Bus RWD 651955/651956		Center Bearing Support Kit	538680S
	2009.03-2013.12		Centre	Bus RWD 651955/651956		Center Bearing Support Kit	538693S
	2009.03-2013.12		Front;Rear	Bus RWD 651955/651956		Flexible Coupling	533884
	2009.03-2013.12		Front;Rear	Bus RWD 651955/651956	Inner diameter:50mm	Flexible Coupling Kit	512673S
	2009.03-2013.12		Front;Rear	Bus RWD 651955/651956	Inner diameter:69.5mm	Flexible Coupling Kit	537832S
	2009.03-2016.12	AT	Front	Chassis Cabin RWD 651955/651956	Chassis no. from:N478536,Chassis no. to:E057183/N478535;Wheelbase:3250 mm	Propshaft	PS901464
	2009.03-2016.12	6MT	Rear	Chassis Cabin RWD 651955/651956	Trans. code:NSG 370	Propshaft	PS900368
	2009.03-2016.12	6MT	Rear	Chassis Cabin RWD 651955/651956	Trans. code:TSG 360	Propshaft	PS900550
	2009.03-2016.12	6MT	Rear	Chassis Cabin RWD 651955/651956	Trans. code:ZF 6S-450	Propshaft	PS900558
	2009.03-2016.12	AT	Rear	Chassis Cabin RWD 651955/651956	for OE No.:9064100016	Propshaft	PS900367
	2009.03-2016.12	AT	Rear	Chassis Cabin RWD 651955/651956	Date from:2011.04,Chassis no. from:56829;for OE No.:A9064102616	Propshaft	PS900559
	2009.03-2016.12		Front	Chassis Cabin RWD 651955/651956		Center Bearing Support	538649
	2009.03-2016.12		Centre	Chassis Cabin RWD 651955/651956		Center Bearing Support	538627
	2009.03-2016.12		Centre	Chassis Cabin RWD 651955/651956		Center Bearing Support	538635
	2009.03-2016.12		Front	Chassis Cabin RWD 651955/651956		Center Bearing Support Kit	538681S
	2009.03-2016.12		Centre	Chassis Cabin RWD 651955/651956		Center Bearing Support Kit	538680S
	2009.03-2016.12		Centre	Chassis Cabin RWD 651955/651956		Center Bearing Support Kit	538693S
	2009.03-2016.12		Front;Rear	Chassis Cabin RWD 651955/651956		Flexible Coupling	533884
	2009.03-2016.12		Front;Rear	Chassis Cabin RWD 651955/651956		Flexible Coupling Kit	537832S
	2009.03-2018.06	6MT	Front	Van RWD 651955/651956	Date from:2011.02,Chassis no. from:S 567427,Trans. code:NSG 400	Propshaft	PS901674
	2009.03-2018.06	AT	Front	Van RWD 651955/651956	Wheelbase:4325 mm	Propshaft	PS901464
	2009.03-2018.06	6MT	Rear	Van RWD 651955/651956	Trans. code:TSG 360	Propshaft	PS900550
	2009.03-2018.06	6MT	Rear	Van RWD 651955/651956	Trans. code:ZF 6S-450	Propshaft	PS900558
	2009.03-2018.06	6MT	Rear	Van RWD 651955/651956	Date from:2011.02,Chassis no. from:S 567427/E 056829,Trans. code:NSG 370	Propshaft	PS901367
	2009.03-2018.06	AT	Rear	Van RWD 651955/651956	Wheelbase:4325 mm;for OE No.:9064100016	Propshaft	PS900367
	2009.03-2018.06	AT	Rear	Van RWD 651955/651956	Date from:2011.04,Chassis no. from:56829;Wheelbase:4325 mm;for OE No.:A9064102616	Propshaft	PS900559
	2009.03-2018.06	AT	Rear	Van RWD 651955/651956	Chassis no. to:B000001/S557374/E056829,Trans. code:G40,Wheelbase:3665 mm	Propshaft	PS901364
	2009.03-2018.06		Centre	Van RWD 651955/651956		Center Bearing Support	538627
	2009.03-2018.06		Centre	Van RWD 651955/651956		Center Bearing Support	538635
	2009.03-2018.06		Front	Van RWD 651955/651956		Center Bearing Support Kit	538681S
	2009.03-2018.06		Centre	Van RWD 651955/651956		Center Bearing Support Kit	538680S
	2009.03-2018.06		Centre	Van RWD 651955/651956		Center Bearing Support Kit	538693S
	2009.03-2018.06		Front;Rear	Van RWD 651955/651956		Flexible Coupling	533884
	2009.03-2018.06		Front;Rear	Van RWD 651955/651956		Flexible Coupling Kit	537832S
2.9 (75 kw)	1995.02-2000.04		Centre	Van RWD OM 602.980		Center Bearing Support	539009
	1995.02-2000.04		Centre	Van RWD OM 602.980		Center Bearing Support Kit	538995S
	1997.01-1999.12		Centre	Bus RWD OM 602.980		Center Bearing Support	539009
	1997.01-1999.12		Centre	Bus RWD OM 602.980		Center Bearing Support Kit	538995S
	1997.01-2000.04		Centre	Platform/Chassis RWD OM 602.980		Center Bearing Support	539009
	1997.01-2000.04		Centre	Platform/Chassis RWD OM 602.980		Center Bearing Support Kit	538995S
	1997.05-2002.08		Centre	Bus 4WD OM 602.980	High1:71mm	Center Bearing Support	539009
	1997.05-2002.08		Centre	Bus 4WD OM 602.980		Center Bearing Support Kit	538995S
	1997.06-2000.04		Centre	Van 4WD OM 602.980		Center Bearing Support	539009
	1997.06-2000.04		Centre	Van 4WD OM 602.980		Center Bearing Support Kit	538995S
Sprinter 311D							
2.0 (84 kw)	2020.06-		Centre	Chassis Cabin RWD 654920		Center Bearing Support	538627
	2020.06-		Centre	Van RWD 654920		Center Bearing Support	538627
	2020.06-		Centre	Van RWD 654920		Center Bearing Support Kit	538693S
	2020.06-		Centre	Chassis Cabin RWD 654920		Center Bearing Support Kit	539925S
	2021.10-		Centre	Bus RWD 654920		Center Bearing Support	538627
	2021.10-		Centre	Bus RWD 654920		Center Bearing Support Kit	538693S
2.1 (80 kw)	2000.04-2006.05	AT	Rear	Bus RWD OM 611.981	For Modelcode:903672,Wheelbase:3550mm	Propshaft	PS900372
	2000.04-2006.05	AT	Rear	Van RWD OM 611.981	For Modelcode:903662,Wheelbase:3550mm	Propshaft	PS900372
	2000.04-2006.05	AT	Rear	Platform/Chassis RWD OM 611.981	For Modelcode:903612,903622,Wheelbase:3550mm	Propshaft	PS900372
	2000.04-2006.05	MT	Rear	Bus RWD OM 611.981		Propshaft	PS900373
	2000.04-2006.05	MT	Rear	Van RWD OM 611.981		Propshaft	PS900373
	2000.04-2006.05	MT	Rear	Platform/Chassis RWD OM 611.981		Propshaft	PS900373
	2000.04-2006.05		Centre	Bus RWD OM 611.981		Center Bearing Support	539009
	2000.04-2006.05		Centre	Platform/Chassis 4WD OM 611.981		Center Bearing Support	539009
	2000.04-2006.05		Centre	Van RWD OM 611.981		Center Bearing Support	539009
	2000.04-2006.05		Centre	Platform/Chassis RWD OM 611.981		Center Bearing Support	539009
	2000.04-2006.05		Centre	Bus RWD OM 611.981		Center Bearing Support Kit	538995S
	2000.04-2006.05		Centre	Platform/Chassis 4WD OM 611.981		Center Bearing Support Kit	538995S
	2000.04-2006.05		Centre	Van RWD OM 611.981		Center Bearing Support Kit	538995S

	YEAR	TRANSM.	FITTING POSITION	BODY STYLE & DRIVE TYPE & ENGINE	REMARKS	PRODUCT	GSP Ref.
MERCEDES-BENZ **Sprinter 311D**							
2.1 (80 kw)	2000.04-2006.05		Centre	Platform/Chassis RWD OM 611.981		Center Bearing Support Kit	538995S
	2002.08-2006.05		Centre	Bus 4WD OM 611.981		Center Bearing Support	539009
	2002.08-2006.05		Centre	Van 4WD OM 611.981		Center Bearing Support	539009
	2002.08-2006.05		Centre	Bus 4WD OM 611.981		Center Bearing Support Kit	538995S
	2002.08-2006.05		Centre	Van 4WD OM 611.981		Center Bearing Support Kit	538995S
2.2 (80 kw)	2006.06-2009.12	MT	Front	Bus RWD 646985	Chassis no. to:N478535/E057183	Propshaft	PS900365
	2006.06-2009.12	MT	Front	Chassis Cabin RWD 646985	Chassis no. to:N478535/E057183	Propshaft	PS900365
	2006.06-2009.12	MT	Front	Van RWD 646985	Chassis no. to:N478535/E057183	Propshaft	PS900365
	2006.06-2009.12	6MT	Rear	Bus RWD 646985	Trans. code:NSG 370;for OE No.:A9064100106	Propshaft	PS900368
	2006.06-2009.12	6MT	Rear	Chassis Cabin RWD 646985	Trans. code:NSG 370;for OE No.:A9064102116	Propshaft	PS900368
	2006.06-2009.12	6MT	Rear	Van RWD 646985	For Modelcode::906633,Trans. code:NSG 370	Propshaft	PS900368
	2006.06-2009.12	6MT	Rear	Bus RWD 646985	Trans. code:TSG 360	Propshaft	PS900550
	2006.06-2009.12	6MT	Rear	Chassis Cabin RWD 646985	Trans. code:TSG 360	Propshaft	PS900550
	2006.06-2009.12	6MT	Rear	Van RWD 646985	For Modelcode::906633,Trans. code:ECO GEAR 360	Propshaft	PS900550
	2006.06-2009.12	6MT	Rear	Bus RWD 646985	Trans. code:ZF 6S-450	Propshaft	PS900558
	2006.06-2009.12	6MT	Rear	Chassis Cabin RWD 646985	Trans. code:ZF 6S-450	Propshaft	PS900558
	2006.06-2009.12	6MT	Rear	Van RWD 646985	For Modelcode::906635/906637	Propshaft	PS900558
	2006.06-2009.12	6MT	Rear	Van RWD 646985	For Modelcode::906635/906637,wheel base:4325 mm	Propshaft	PS901368
	2006.06-2009.12	6MT	Rear	Van RWD 646985	For Modelcode::906631,Trans. code:TSG 370	Propshaft	PS901858
	2006.06-2009.12	AT	Rear	Bus RWD 646985	for OE No.:9064100016	Propshaft	PS900367
	2006.06-2009.12	AT	Rear	Chassis Cabin RWD 646985	for OE No.:9064100016	Propshaft	PS900367
	2006.06-2009.12	AT	Rear	Van RWD 646985	For Modelcode:906.635/906.637	Propshaft	PS900367
	2006.06-2009.12	AT	Rear	Bus RWD 646985	For Modelcode:906.735;for OE No.:A9064107516	Propshaft	PS901591
	2006.06-2009.12	AT	Rear	Van RWD 646985	For Modelcode:906.635/906.637	Propshaft	PS901591
	2006.06-2009.12	AT/6MT	Rear	Bus RWD 646985	Trans. code:NSG 370/NSG 400;for OE No.:A9064100216	Propshaft	PS901368
	2006.06-2009.12	AT/6MT	Rear	Chassis Cabin RWD 646985	Trans. code:NSG 370/NSG 400;for OE No.:A9064100216	Propshaft	PS901368
	2006.06-2009.12	6MT	-	Van RWD 646985	For Modelcode:906631,Trans. code:TSG 360	Propshaft	PS901829
	2006.06-2009.12		Front	Chassis Cabin RWD 646985		Center Bearing Support	538649
	2006.06-2009.12		Front	Van RWD 646985		Center Bearing Support	538649
	2006.06-2009.12		Centre	Bus RWD 646985		Center Bearing Support	538627
	2006.06-2009.12		Centre	Chassis Cabin RWD 646985		Center Bearing Support	538627
	2006.06-2009.12		Centre	Van RWD 646985		Center Bearing Support	538627
	2006.06-2009.12		Centre	Bus RWD 646985		Center Bearing Support	538635
	2006.06-2009.12		Centre	Chassis Cabin RWD 646985		Center Bearing Support	538635
	2006.06-2009.12		Centre	Van RWD 646985		Center Bearing Support	538635
	2006.06-2009.12		Front	Bus RWD 646985		Center Bearing Support Kit	538681S
	2006.06-2009.12		Front	Chassis Cabin RWD 646985		Center Bearing Support Kit	538681S
	2006.06-2009.12		Front	Van RWD 646985		Center Bearing Support Kit	538681S
	2006.06-2009.12		Centre	Bus RWD 646985		Center Bearing Support Kit	538680S
	2006.06-2009.12		Centre	Chassis Cabin RWD 646985		Center Bearing Support Kit	538680S
	2006.06-2009.12		Centre	Van RWD 646985		Center Bearing Support Kit	538680S
	2006.06-2009.12		Centre	Bus RWD 646985		Center Bearing Support Kit	538693S
	2006.06-2009.12		Centre	Chassis Cabin RWD 646985		Center Bearing Support Kit	538693S
	2006.06-2009.12		Centre	Van RWD 646985		Center Bearing Support Kit	538693S
	2006.06-2009.12		Front;Rear	Bus RWD 646985		Flexible Coupling	533884
	2006.06-2009.12		Front;Rear	Chassis Cabin RWD 646985		Flexible Coupling	533884
	2006.06-2009.12		Front;Rear	Van RWD 646985		Flexible Coupling	533884
	2006.06-2009.12		Front;Rear	Bus RWD 646985	Inner diameter:50mm	Flexible Coupling Kit	512673S
	2006.06-2009.12		Front;Rear	Bus RWD 646985	Inner diameter:69.5mm	Flexible Coupling Kit	537832S
	2006.06-2009.12		Front;Rear	Chassis Cabin RWD 646985		Flexible Coupling Kit	537832S
	2006.06-2009.12		Front;Rear	Van RWD 646985		Flexible Coupling Kit	537832S
	2008.02-2009.12	AT	Front	Bus 4WD 646985	For Modelcode:906.735	Propshaft	PS900632
	2008.02-2009.12	AT	Front	Van 4WD 646985	For Modelcode:906.635/906.637	Propshaft	PS900632
	2008.02-2009.12	6MT	Rear	Van 4WD 646985	For Modelcode:906637/906635	Propshaft	PS901855
	2008.02-2009.12	6MT	Rear	Bus 4WD 646985	For Modelcode:906733,without STEUERCODE HINTERACHSE TELLERRAD 215	Propshaft	PS901857
	2008.02-2009.12	6MT	Rear	Chassis Cabin 4WD 646985	For Modelcode:906233/906133	Propshaft	PS901857
	2008.02-2009.12	6MT	Rear	Van 4WD 646985	For Modelcode:906633,without STEUERCODE HINTERACHSE TELLERRAD 215	Propshaft	PS901857
	2008.02-2009.12	6MT	Rear	Bus 4WD 646985	Model code:906733,with STEUERCODE HINTERACHSE TELLERRAD 215	Propshaft	PS901986
	2008.02-2009.12	AT	Rear	Bus 4WD 646985	For Modelcode:906733,Wheelbase:3665 mm,with STEUERCODE HINTERACHSE TELLERRAD 215,Trans. type:7G-TRONIC PLUS	Propshaft	PS901685
	2008.02-2009.12	AT	Rear	Bus 4WD 646985	For Modelcode:906733,Wheelbase:3665 mm,without STEUERCODE HINTERACHSE TELLERRAD 215,Trans. type:7G-TRONIC PLUS	Propshaft	PS901708
	2008.02-2009.12	AT	Rear	Bus 4WD 646985	Model code:906733,without STEUERCODE HINTERACHSE TELLERRAD 215,without 7G-TRONIC PLUS	Propshaft	PS901983
	2008.02-2009.12	MT	Rear	Bus 4WD 646985	For Modelcode:906.735	Propshaft	PS901591
	2008.02-2009.12	MT	Rear	Van 4WD 646985	For Modelcode:906.635/906.637	Propshaft	PS901591
	2008.02-2009.12	AT	-	Chassis Cabin 4WD 646985	For Modelcode:906233/906133,Wheelbase:3665 mm,with STEUERCODE HINTERACHSE TELLERRAD 215,Trans. type:7G-TRONIC PLUS	Propshaft	PS901685

	YEAR	TRANSM.	FITTING POSITION	BODY STYLE & DRIVE TYPE & ENGINE	REMARKS	PRODUCT	GSP Ref.
MERCEDES-BENZ **Sprinter 311D**							
2.2 (80 kw)	2008.02-2009.12	AT	-	Van 4WD 646985	For Modelcode:906633,Wheelbase:3665 mm,with STEUERCODE HINTERACHSE TELLERRAD 215,Trans. type:7G-TRONIC PLUS	Propshaft	PS901685
	2008.02-2009.12	AT	-	Chassis Cabin 4WD 646985	For Modelcode:906633/906133,Wheelbase:3665 mm,without STEUERCODE HINTERACHSE TELLERRAD 215,Trans. type:7G-TRONIC PLUS	Propshaft	PS901708
	2008.02-2009.12	AT	-	Van 4WD 646985	For Modelcode:906633,Wheelbase:3665 mm,without STEUERCODE HINTERACHSE TELLERRAD 215,Trans. type:7G-TRONIC PLUS	Propshaft	PS901708
	2008.02-2009.12	AT/6MT	-	Van 4WD 646985	For Modelcode:906633,Transmission:6MT,with STEUERCODE HINTERACHSE TELLERRAD 215	Propshaft	PS901366
	2008.02-2009.12		Centre	Bus 4WD 646985		Center Bearing Support	538627
	2008.02-2009.12		Centre	Chassis Cabin 4WD 646985		Center Bearing Support	538627
	2008.02-2009.12		Centre	Van 4WD 646985		Center Bearing Support	538627
	2008.02-2009.12		Centre	Bus 4WD 646985		Center Bearing Support	538635
	2008.02-2009.12		Centre	Chassis Cabin 4WD 646985		Center Bearing Support	538635
	2008.02-2009.12		Centre	Van 4WD 646985		Center Bearing Support	538635
	2008.02-2009.12		Front	Bus 4WD 646985		Center Bearing Support Kit	538681S
	2008.02-2009.12		Front	Chassis Cabin 4WD 646985		Center Bearing Support Kit	538681S
	2008.02-2009.12		Front	Van 4WD 646985		Center Bearing Support Kit	538681S
	2008.02-2009.12		Centre	Bus 4WD 646985		Center Bearing Support Kit	538680S
	2008.02-2009.12		Centre	Chassis Cabin 4WD 646985		Center Bearing Support Kit	538680S
	2008.02-2009.12		Centre	Van 4WD 646985		Center Bearing Support Kit	538680S
	2008.02-2009.12		Centre	Bus 4WD 646985		Center Bearing Support Kit	538693S
	2008.02-2009.12		Centre	Chassis Cabin 4WD 646985		Center Bearing Support Kit	538693S
	2008.02-2009.12		Centre	Van 4WD 646985		Center Bearing Support Kit	538693S
	2008.02-2009.12		Front;Rear	Bus 4WD 646985		Flexible Coupling	533884
	2008.02-2009.12		Front;Rear	Chassis Cabin 4WD 646985		Flexible Coupling	533884
	2008.02-2009.12		Front;Rear	Van 4WD 646985		Flexible Coupling	533884
	2008.02-2009.12		Front;Rear	Bus 4WD 646985		Flexible Coupling Kit	537832S
	2008.02-2009.12		Front;Rear	Chassis Cabin 4WD 646985		Flexible Coupling Kit	537832S
	2008.02-2009.12		Front;Rear	Van 4WD 646985		Flexible Coupling Kit	537832S
2.2 (84 kw)	2016.04-2018.12	6MT	Front	Van RWD 651955/651956	Date from:2016.09,Chassis no. from:P333970,Trans. code:TSG 360	Propshaft	PS900609
	2016.04-2018.12	6MT	Front	Bus RWD 651955/651956	Trans. code:NSG 400	Propshaft	PS901674
	2016.04-2018.12	AT	Front	Bus RWD 651955/651956	Date from:2016.09,Chassis no. from:P333970,Trans. code:TSG 360	Propshaft	PS900609
	2016.04-2018.12	MT	Front	Bus RWD 651955/651956	For Engine code:OM 612 DE LA,Trans. code:G 33-5/5;05-0,75	Propshaft	PS901377
	2016.04-2018.12	6MT	Rear	Bus RWD 651955/651956	Trans. code:NSG 370;for OE No.:A9064100106	Propshaft	PS900368
	2016.04-2018.12	6MT	Rear	Chassis Cabin RWD 651955/651956	Trans. code:NSG 370	Propshaft	PS900368
	2016.04-2018.12	6MT	Rear	Van RWD 651955/651956	For Modelcode::906633,Trans. code:NSG 370	Propshaft	PS900368
	2016.04-2018.12	6MT	Rear	Bus RWD 651955/651956	Trans. code:ZF 6S-450	Propshaft	PS900558
	2016.04-2018.12	6MT	Rear	Van RWD 651955/651956	For Modelcode::906635/906637	Propshaft	PS900558
	2016.04-2018.12	6MT	Rear	Bus RWD 651955/651956	Trans. code:NSG 370;for OE No.:A9064100006	Propshaft	PS901367
	2016.04-2018.12	6MT	Rear	Van RWD 651955/651956	For Modelcode::906635/906637,wheel base:4325 mm	Propshaft	PS901367
	2016.04-2018.12	6MT	Rear	Van RWD 651955/651956	For Modelcode::906631,Trans. code:TSG 370	Propshaft	PS901858
	2016.04-2018.12	AT	Rear	Bus RWD 651955/651956	for OE No.:9064100016	Propshaft	PS900367
	2016.04-2018.12	AT	Rear	Van RWD 651955/651956	For Modelcode:906.635/906.637	Propshaft	PS900367
	2016.04-2018.12	AT	Rear	Bus RWD 651955/651956	For Modelcode:906.735;for OE No.:A9064107516	Propshaft	PS901591
	2016.04-2018.12	AT	Rear	Van RWD 651955/651956	For Modelcode:906.635/906.637	Propshaft	PS901591
	2016.04-2018.12	AT	Rear	Chassis Cabin RWD 651955/651956	Model code:906233/906133	Propshaft	PS901965
	2016.04-2018.12	6MT	-	Van RWD 651955/651956	For Modelcode:906631,Trans. code:TSG 360	Propshaft	PS901829
	2016.04-2018.12		Centre	Bus RWD 651955/651956		Center Bearing Support	538627
	2016.04-2018.12		Centre	Chassis Cabin RWD 651955/651956		Center Bearing Support	538627
	2016.04-2018.12		Centre	Van RWD 651955/651956		Center Bearing Support	538627
	2016.04-2018.12		Centre	Bus RWD 651955/651956		Center Bearing Support	538635
	2016.04-2018.12		Centre	Chassis Cabin RWD 651955/651956		Center Bearing Support	538635
	2016.04-2018.12		Centre	Van RWD 651955/651956		Center Bearing Support	538635
	2016.04-2018.12		Front	Bus RWD 651955/651956		Center Bearing Support Kit	538681S
	2016.04-2018.12		Front	Chassis Cabin RWD 651955/651956		Center Bearing Support Kit	538681S
	2016.04-2018.12		Front	Van RWD 651955/651956		Center Bearing Support Kit	538681S
	2016.04-2018.12		Centre	Bus RWD 651955/651956		Center Bearing Support Kit	538693S
	2016.04-2018.12		Centre	Chassis Cabin RWD 651955/651956		Center Bearing Support Kit	538693S
	2016.04-2018.12		Centre	Van RWD 651955/651956		Center Bearing Support Kit	538693S
	2016.04-2018.12		Front;Rear	Bus RWD 651955/651956		Flexible Coupling	533884
	2016.04-2018.12		Front;Rear	Chassis Cabin RWD 651955/651956		Flexible Coupling	533884
	2016.04-2018.12		Front;Rear	Van RWD 651955/651956		Flexible Coupling	533884
	2016.04-2018.12		Front;Rear	Bus RWD 651955/651956		Flexible Coupling Kit	537832S
	2016.04-2018.12		Front;Rear	Chassis Cabin RWD 651955/651956		Flexible Coupling Kit	537832S
	2016.04-2018.12		Front;Rear	Van RWD 651955/651956		Flexible Coupling Kit	537832S
	2018.02-		Centre	Van RWD 651958		Center Bearing Support	538627
	2018.02-		Centre	Chassis Cabin RWD 651958		Center Bearing Support	538627
	2018.02-		Centre	Bus RWD 651958		Center Bearing Support	538627

	YEAR	TRANSM.	FITTING POSITION	BODY STYLE & DRIVE TYPE & ENGINE	REMARKS	PRODUCT	GSP Ref.
MERCEDES-BENZ							
Sprinter 311D							
2.2 (84 kw)	2018.02-		Centre	Bus RWD 651958		Center Bearing Support Kit	538693S
	2018.02-		Centre	Van RWD 651958		Center Bearing Support Kit	539925S
	2018.02-		Centre	Chassis Cabin RWD 651958		Center Bearing Support Kit	539925S
	2018.02-		Front;Rear	Van RWD 651958		Flexible Coupling	533884
	2018.02-		Front;Rear	Chassis Cabin RWD 651958		Flexible Coupling	533884
	2018.02-		Front;Rear	Bus RWD 651958		Flexible Coupling	533884
Sprinter 312D							
2.9 (85 kw)	1998.12-2001.09		Centre	Platform/Chassis RWD OM 602.980		Center Bearing Support	539009
	1998.12-2001.09		Centre	Platform/Chassis RWD OM 602.980		Center Bearing Support Kit	538995S
2.9 (90 kw)	1995.02-2000.04		Centre	Van RWD OM 602.980 (02.95-.)		Center Bearing Support	539009
	1995.02-2000.04		Centre	Bus RWD OM 602.980 (02.95-.)	Installation size:194mm	Center Bearing Support	539009
	1995.02-2000.04		Centre	Platform/Chassis RWD OM 602.980 (02.95-.)		Center Bearing Support	539009
	1995.02-2000.04		Centre	Van RWD OM 602.980 (02.95-.)		Center Bearing Support Kit	538995S
	1995.02-2000.04		Centre	Bus RWD OM 602.980 (02.95-.)		Center Bearing Support Kit	538995S
	1995.02-2000.04		Centre	Platform/Chassis RWD OM 602.980 (02.95-.)		Center Bearing Support Kit	538995S
	1997.05-2002.08		Centre	Van 4WD OM 602.980	Installation size:194mm	Center Bearing Support	539009
	1997.05-2002.08		Centre	Bus 4WD OM 602.980 (05.97-.)		Center Bearing Support	539009
	1997.05-2002.08		Centre	Van 4WD OM 602.980		Center Bearing Support Kit	538995S
	1997.05-2002.08		Centre	Bus 4WD OM 602.980 (05.97-.)		Center Bearing Support Kit	538995S
Sprinter 313D							
2.1 (95 kw)	2000.04-2006.05	AT	Rear	Bus RWD OM 611.981	For Modelcode:903672,Wheelbase:3550mm	Propshaft	PS900372
	2000.04-2006.05	AT	Rear	Van RWD OM 611.981	For Modelcode:903662,Wheelbase:3550mm	Propshaft	PS900372
	2000.04-2006.05	AT	Rear	Platform/Chassis RWD OM 611.981	For Modelcode:903612,903622,Wheelbase:3550mm	Propshaft	PS900372
	2000.04-2006.05	MT	Rear	Bus RWD OM 611.981		Propshaft	PS900373
	2000.04-2006.05	MT	Rear	Van RWD OM 611.981		Propshaft	PS900373
	2000.04-2006.05	MT	Rear	Platform/Chassis RWD OM 611.981		Propshaft	PS900373
	2000.04-2006.05		Centre	Bus RWD OM 611.981		Center Bearing Support	539009
	2000.04-2006.05		Centre	Platform/Chassis 4WD OM 611.981		Center Bearing Support	539009
	2000.04-2006.05		Centre	Van RWD OM 611.981		Center Bearing Support	539009
	2000.04-2006.05		Centre	Platform/Chassis RWD OM 611.981		Center Bearing Support	539009
	2000.04-2006.05		Centre	Bus RWD OM 611.981		Center Bearing Support Kit	538995S
	2000.04-2006.05		Centre	Platform/Chassis 4WD OM 611.981		Center Bearing Support Kit	538995S
	2000.04-2006.05		Centre	Van RWD OM 611.981		Center Bearing Support Kit	538995S
	2000.04-2006.05		Centre	Platform/Chassis RWD OM 611.981		Center Bearing Support Kit	538995S
	2002.08-2006.05		Centre	Bus 4WD OM 611.981		Center Bearing Support	539009
	2002.08-2006.05		Centre	Van 4WD OM 611.981		Center Bearing Support	539009
	2002.08-2006.05		Centre	Bus 4WD OM 611.981		Center Bearing Support Kit	538995S
	2002.08-2006.05		Centre	Van 4WD OM 611.981		Center Bearing Support Kit	538995S
2.2 (95 kw)	2006.06-2016.05	MT	Front	Chassis Cabin RWD 646986	Chassis no. to:N478535/E057183	Propshaft	PS900365
	2006.06-2016.05	6MT	Rear	Chassis Cabin RWD 646986	Trans. code:NSG 370;for OE No.:A9064100106	Propshaft	PS900368
	2006.06-2016.05	6MT	Rear	Chassis Cabin RWD 646986		Propshaft	PS900550
	2006.06-2016.05	6MT	Rear	Chassis Cabin RWD 646986	Trans. code:ZF 6S-450	Propshaft	PS900558
	2006.06-2016.05	6MT	Rear	Chassis Cabin RWD 646986	Date from:2011.02,Chassis no. from:S 567427/E 056829,Trans. code:NSG 370;for OE No.:A9064100006	Propshaft	PS901367
	2006.06-2016.05	6MT	Rear	Chassis Cabin RWD 646986	Date from:2009.03,Date to:2011.02,Chassis no.from:N 478535,Chassis no.to:N 478535,Transm.Type:TSG 360	Propshaft	PS901684
	2006.06-2016.05	AT	Rear	Chassis Cabin RWD 646986	for OE No.:9064100016	Propshaft	PS900367
	2006.06-2016.05	AT	Rear	Chassis Cabin RWD 646986	Date from:2011.04,Chassis no. from:56829;for OE No.:A9064107816	Propshaft	PS900559
	2006.06-2016.05		Centre	Chassis Cabin RWD 646986		Center Bearing Support	538627
	2006.06-2016.05		Centre	Chassis Cabin RWD 646986		Center Bearing Support	538635
	2006.06-2016.05		Front	Chassis Cabin RWD 646986		Center Bearing Support Kit	538681S
	2006.06-2016.05		Centre	Chassis Cabin RWD 646986		Center Bearing Support Kit	538680S
	2006.06-2016.05		Centre	Chassis Cabin RWD 646986		Center Bearing Support Kit	538693S
	2006.06-2016.05		Front;Rear	Chassis Cabin RWD 646986		Flexible Coupling	533884
	2006.06-2016.05		Front;Rear	Chassis Cabin RWD 646986		Flexible Coupling Kit	537832S
	2006.06-2016.12	5AT/7AT/6MT	Rear	Chassis Cabin 4WD 651955/651956/651957	Modelcode:906131/906231,Wheelbase:3250 mm	Propshaft	PS901705
	2006.06-2016.12	AT	-	Chassis Cabin 4WD 651955/651956/651957	For Modelcode:906231/906131,Wheelbase:3665 mm;with ETS/URC/CGE HK/TRACHSE TELLERRAD 215,Trans. type:722.7RONC PLUS	Propshaft	PS901685
	2006.06-2016.12	AT	-	Chassis Cabin 4WD 651955/651956/651957	For Modelcode:906231/906131,Wheelbase:3665 mm;without ETS/URC/CGE HK/TRACHSE TELLERRAD 215,Trans. type:722.7RONC PLUS	Propshaft	PS901708
	2006.06-2016.12		Centre	Chassis Cabin 4WD 651955/651956/651957		Center Bearing Support	538627
	2006.06-2016.12		Centre	Chassis Cabin 4WD 651955/651956/651957		Center Bearing Support	538635
	2006.06-2016.12		Front	Chassis Cabin 4WD 651955/651956/651957		Center Bearing Support Kit	538681S
	2006.06-2016.12		Centre	Chassis Cabin 4WD 651955/651956/651957		Center Bearing Support Kit	538680S
	2006.06-2016.12		Centre	Chassis Cabin 4WD 651955/651956/651957		Center Bearing Support Kit	538693S
	2006.06-2016.12		Front;Rear	Chassis Cabin 4WD 651955/651956/651957	Engine Code:OM 651.956	Flexible Coupling	533884
	2006.06-2016.12		Front;Rear	Chassis Cabin 4WD 651955/651956/651957		Flexible Coupling Kit	537832S
	2006.06-2018.06	6MT	Front	Van RWD 646986	Date from:2011.02,Chassis no. from:S 567427,Trans. code:NSG 400	Propshaft	PS901674

	YEAR	TRANSM.	FITTING POSITION	BODY STYLE & DRIVE TYPE & ENGINE	REMARKS	PRODUCT	GSP Ref.
MERCEDES-BENZ **Sprinter 313D**							
2.2 (95 kw)	2006.06-2018.06	MT	Front	Van RWD 646986	Chassis no. to:N478535/E057183	Propshaft	PS900365
	2006.06-2018.06	6MT	Rear	Van RWD 646986	Trans. code:NSG 370;for OE No.:A9064100106	Propshaft	PS900368
	2006.06-2018.06	6MT	Rear	Van RWD 646986	Trans. code:TSG 360	Propshaft	PS900550
	2006.06-2018.06	6MT	Rear	Van RWD 646986	Trans. code:ZF 6S-450	Propshaft	PS900558
	2006.06-2018.06	6MT	Rear	Van RWD 646986	Date from:2011.02,Chassis no. from:S 567427E 056829;Trans. code:NSG 370;for OE No.:A9064100066	Propshaft	PS901367
	2006.06-2018.06	AT	Rear	Van RWD 646986	for OE No.:9064100016	Propshaft	PS900367
	2006.06-2018.06	AT	Rear	Van RWD 646986	Date from:2011.04,Chassis no. from:56829;for OE No.:A9064107816	Propshaft	PS900559
	2006.06-2018.06		Centre	Van RWD 646986		Center Bearing Support	538627
	2006.06-2018.06		Centre	Van RWD 646986		Center Bearing Support	538635
	2006.06-2018.06		Front	Van RWD 646986		Center Bearing Support Kit	538681S
	2006.06-2018.06		Centre	Van RWD 646986		Center Bearing Support Kit	538680S
	2006.06-2018.06		Centre	Van RWD 646986		Center Bearing Support Kit	538693S
	2006.06-2018.06		Front;Rear	Van RWD 646986		Flexible Coupling	533884
	2006.06-2018.06		Front;Rear	Van RWD 646986		Flexible Coupling Kit	537832S
	2006.06-2019.12	AT	Front	Chassis Cabin RWD 651955/651956/651957	Chassis no. from:N478536,Chassis no. to:E057183/N478535;Wheelbase:3250 mm	Propshaft	PS901464
	2006.06-2019.12	6MT	Rear	Chassis Cabin RWD 651955/651956/651957	Trans. code:NSG 370;for OE No.:A9064102116	Propshaft	PS900368
	2006.06-2019.12	6MT	Rear	Chassis Cabin RWD 651955/651956/651957		Propshaft	PS900550
	2006.06-2019.12	6MT	Rear	Chassis Cabin RWD 651955/651956/651957	Trans. code:ZF 6S-450	Propshaft	PS900558
	2006.06-2019.12	6MT	Rear	Chassis Cabin RWD 651955/651956/651957	Date from:2011.02,Chassis no. from:S 567427E 056829;Trans. code:NSG 370;for OE No.:A9064100066	Propshaft	PS901367
	2006.06-2019.12	6MT	Rear	Chassis Cabin RWD 651955/651956/651957	Date from:2009.03,Date to:2011.02,Chassis no.from:N 418539,Chassis no.to:N 418539,Trans.:Type TSG 360	Propshaft	PS901684
	2006.06-2019.12	AT	Rear	Chassis Cabin RWD 651955/651956/651957	for OE No.:9064100016	Propshaft	PS900367
	2006.06-2019.12	AT	Rear	Chassis Cabin RWD 651955/651956/651957	Date from:2011.04,Chassis no. from:56829;for OE No.:A9064102616	Propshaft	PS900559
	2006.06-2019.12		Centre	Chassis Cabin RWD 651955/651956/651957		Center Bearing Support	538627
	2006.06-2019.12		Centre	Chassis Cabin RWD 651955/651956/651957		Center Bearing Support	538635
	2006.06-2019.12		Front	Chassis Cabin RWD 651955/651956/651957		Center Bearing Support Kit	538681S
	2006.06-2019.12		Centre	Chassis Cabin RWD 651955/651956/651957		Center Bearing Support Kit	538680S
	2006.06-2019.12		Centre	Chassis Cabin RWD 651955/651956/651957		Center Bearing Support Kit	538693S
	2006.06-2019.12		Front;Rear	Chassis Cabin RWD 651955/651956/651957	Engine Code:OM 651.956	Flexible Coupling	533884
	2006.06-2019.12		Front;Rear	Chassis Cabin RWD 651955/651956/651957		Flexible Coupling Kit	537832S
	2009.03-2016.12	6MT	Rear	Van 4WD 651955/651956/651957	For Modelcode:906633	Propshaft	PS901857
	2009.03-2016.12	AT	Rear	Van 4WD 651955/651956/651957	For Modelcode:906633,Wheelbase:3665 mm,with STEUERCODE HINTERACHSE TELLERRAD 215,Trans. type:7G-TRONIC PLUS	Propshaft	PS901685
	2009.03-2016.12	AT	Rear	Van 4WD 651955/651956/651957	Modelcode:906631,Wheelbase:3250 mm,Date from:2011.02	Propshaft	PS901705
	2009.03-2016.12	AT	Rear	Van 4WD 651955/651956/651957	For Modelcode:906633,Wheelbase:3665 mm,without STEUERCODE HINTERACHSE TELLERRAD 215,Trans. type:7G-TRONIC PLUS	Propshaft	PS901708
	2009.03-2016.12	AT	Rear	Van 4WD 651955/651956/651957	Model code:906633;without STEUERCODE HINTERACHSE TELLERRAD 215;without 7G-TRONIC PLUS	Propshaft	PS901965
	2009.03-2016.12		Centre	Van 4WD 651955/651956/651957		Center Bearing Support	538627
	2009.03-2016.12		Centre	Van 4WD 651955/651956/651957		Center Bearing Support	538635
	2009.03-2016.12		Front	Van 4WD 651955/651956/651957		Center Bearing Support Kit	538681S
	2009.03-2016.12		Centre	Van 4WD 651955/651956/651957		Center Bearing Support Kit	538680S
	2009.03-2016.12		Centre	Van 4WD 651955/651956/651957		Center Bearing Support Kit	538693S
	2009.03-2016.12		Front;Rear	Van 4WD 651955/651956/651957	Engine Code:OM 651.956	Flexible Coupling	533884
	2009.03-2016.12		Front;Rear	Van 4WD 651955/651956/651957		Flexible Coupling Kit	537832S
	2009.03-2018.06	AT	Front	Van RWD 651955/651956/651957	Chassis no. from:S567427E/E056829;Wheelbase:3250 mm;for OE No.:A9064102701	Propshaft	PS901464
	2009.03-2018.06	6MT	Rear	Van RWD 651955/651956/651957	Trans. code:NSG 370	Propshaft	PS900368
	2009.03-2018.06	6MT	Rear	Van RWD 651955/651956/651957	Trans. code:TSG 360	Propshaft	PS900550
	2009.03-2018.06	6MT	Rear	Van RWD 651955/651956/651957	Trans. code:ZF 6S-450	Propshaft	PS900558
	2009.03-2018.06	AT	Rear	Van RWD 651955/651956/651957	Wheelbase:4325 mm;for OE No.:9064100016	Propshaft	PS900367
	2009.03-2018.06	AT	Rear	Van RWD 651955/651956/651957	Date from:2011.04,Chassis no. from:56829;Wheelbase:4325 mm;for OE No.:A9064107816	Propshaft	PS900559
	2009.03-2018.06	AT	Rear	Van RWD 651955/651956/651957	Date to:2011.08,Chassis no. to:B000001/S567374/E056829;Trans. code:G40;Wheelbase:3665 mm	Propshaft	PS901364
	2009.03-2018.06		Centre	Van RWD 651955/651956/651957		Center Bearing Support	538627
	2009.03-2018.06		Centre	Van RWD 651955/651956/651957		Center Bearing Support	538635
	2009.03-2018.06		Front	Van RWD 651955/651956/651957		Center Bearing Support Kit	538681S
	2009.03-2018.06		Centre	Van RWD 651955/651956/651957		Center Bearing Support Kit	538680S
	2009.03-2018.06		Centre	Van RWD 651955/651956/651957		Center Bearing Support Kit	538693S
	2009.03-2018.06		Front;Rear	Van RWD 651955/651956/651957	Engine Code:OM 651.956	Flexible Coupling	533884
	2009.03-2018.06		Front;Rear	Van RWD 651955/651956/651957		Flexible Coupling Kit	537832S
	2011.08-2016.12	AT	-	Bus 4WD 651955/651956/651957	For Modelcode:906733,Wheelbase:3665 mm,with STEUERCODE HINTERACHSE TELLERRAD 215,Trans. type:7G-TRONIC PLUS	Propshaft	PS901685
	2011.08-2016.12	AT	-	Bus 4WD 651955/651956/651957	For Modelcode:906733,Wheelbase:3665 mm,without STEUERCODE HINTERACHSE TELLERRAD 215,Trans. type:7G-TRONIC PLUS	Propshaft	PS901708
	2011.08-2016.12		Centre	Bus 4WD 651955/651956/651957		Center Bearing Support	538627
	2011.08-2016.12		Centre	Bus 4WD 651955/651956/651957		Center Bearing Support	538635
	2011.08-2016.12		Front	Bus 4WD 651955/651956/651957		Center Bearing Support Kit	538681S
	2011.08-2016.12		Centre	Bus 4WD 651955/651956/651957		Center Bearing Support Kit	538693S
	2011.08-2016.12		Front;Rear	Bus 4WD 651955/651956/651957		Flexible Coupling	533884
	2011.08-2016.12		Front;Rear	Bus 4WD 651955/651956/651957		Flexible Coupling Kit	537832S
	2011.08-2019.12	6MT	Front	Bus RWD 651955/651956/651957	Chassis no. from:S 567427,Trans. code:NSG 400	Propshaft	PS901674

	YEAR	TRANSM.	FITTING POSITION	BODY STYLE & DRIVE TYPE & ENGINE	REMARKS	PRODUCT	GSP Ref.
MERCEDES-BENZ							
Sprinter 313D							
2.2 (95 kw)	2011.08-2019.12	6MT	Rear	Bus RWD 651955/651956/651957	Trans. code:NSG 370;for OE No.:A9064100106	Propshaft	PS900368
	2011.08-2019.12	6MT	Rear	Bus RWD 651955/651956/651957	Trans. code:TSG 360	Propshaft	PS900550
	2011.08-2019.12	6MT	Rear	Bus RWD 651955/651956/651957	Trans. code:ZF 6S-450	Propshaft	PS900558
	2011.08-2019.12	6MT	Rear	Bus RWD 651955/651956/651957	Date from:2011.02,Chassis no. from:S 5874276 656829,Trans. code:NSG 370;for OE No.:A9064100006	Propshaft	PS901367
	2011.08-2019.12	AT	Rear	Bus RWD 651955/651956/651957	for OE No.:9064100016	Propshaft	PS900367
	2011.08-2019.12	AT	Rear	Bus RWD 651955/651956/651957	for OE No.:A9064107816	Propshaft	PS900559
	2011.08-2019.12		Centre	Bus RWD 651955/651956/651957		Center Bearing Support	538627
	2011.08-2019.12		Centre	Bus RWD 651955/651956/651957		Center Bearing Support	538635
	2011.08-2019.12		Front	Bus RWD 651955/651956/651957		Center Bearing Support Kit	538681S
	2011.08-2019.12		Centre	Bus RWD 651955/651956/651957		Center Bearing Support Kit	538680S
	2011.08-2019.12		Centre	Bus RWD 651955/651956/651957		Center Bearing Support Kit	538693S
	2011.08-2019.12		Front;Rear	Bus RWD 651955/651956/651957		Flexible Coupling	533884
	2011.08-2019.12		Front;Rear	Bus RWD 651955/651956/651957	Inner diameter:50mm	Flexible Coupling Kit	512673S
	2011.08-2019.12		Front;Rear	Bus RWD 651955/651956/651957	Inner diameter:69.5mm	Flexible Coupling Kit	537832S
Sprinter 314							
2.3 (105 kw)	1995.02-2006.05	5AT/5MT	Front	Van RWD M 111.979 (.-04.00), M 111.984 (04.00-.)		Propshaft	PS900366
	1995.02-2006.05	6AT/5MT	Front	Van 4WD M 111.979 (.-04.00), M 111.984 (04.00-.)		Propshaft	PS900366
	1995.02-2006.05	MT	Front	Platform/Chassis RWD M 111.979 (.-04.00), M 111.984 (04.00-.)		Propshaft	PS900568
	1995.02-2006.05		Centre	Bus RWD M 111.979 (.-04.00), M 111.984 (04.00-.)		Center Bearing Support	539009
	1995.02-2006.05		Centre	Platform/Chassis RWD M 111.979 (.-04.00), M 111.984 (04.00-.)		Center Bearing Support	539009
	1995.02-2006.05		Centre	Van RWD M 111.979 (.-04.00), M 111.984 (04.00-.)		Center Bearing Support	539009
	1995.02-2006.05		Centre	Bus 4WD M 111.979 (.-04.00), M 111.984 (04.00-.)		Center Bearing Support	539009
	1995.02-2006.05		Centre	Van 4WD M 111.979 (.-04.00), M 111.984 (04.00-.)		Center Bearing Support	539009
	1995.02-2006.05		Centre	Platform/Chassis 4WD M 111.979 (.-04.00), M 111.984 (04.00-.)		Center Bearing Support	539009
	1995.02-2006.05		Centre	Bus RWD M 111.979 (.-04.00), M 111.984 (04.00-.)		Center Bearing Support Kit	538995S
	1995.02-2006.05		Centre	Platform/Chassis RWD M 111.979 (.-04.00), M 111.984 (04.00-.)		Center Bearing Support Kit	538995S
	1995.02-2006.05		Centre	Van RWD M 111.979 (.-04.00), M 111.984 (04.00-.)		Center Bearing Support Kit	538995S
	1995.02-2006.05		Centre	Bus 4WD M 111.979 (.-04.00), M 111.984 (04.00-.)		Center Bearing Support Kit	538995S
	1995.02-2006.05		Centre	Van 4WD M 111.979 (.-04.00), M 111.984 (04.00-.)		Center Bearing Support Kit	538995S
	1995.02-2006.05		Centre	Platform/Chassis 4WD M 111.979 (.-04.00), M 111.984 (04.00-.)		Center Bearing Support Kit	538995S
Sprinter 314 NGT							
2.3 (95 kw)	1995.02-2006.05	MT	Front	Platform/Chassis RWD M 111.979, M 111.984		Propshaft	PS900568
	1995.02-2006.05		Centre	Bus RWD M 111.979 (.-04.00), M 111.984 (04.00-.)		Center Bearing Support	539009
	1995.02-2006.05		Centre	Platform/Chassis RWD M 111.979, M 111.984		Center Bearing Support	539009
	1995.02-2006.05		Centre	Van RWD M 111.979, M 111.984		Center Bearing Support	539009
	1995.02-2006.05		Centre	Bus RWD M 111.979 (.-04.00), M 111.984 (04.00-.)		Center Bearing Support Kit	538995S
	1995.02-2006.05		Centre	Platform/Chassis RWD M 111.979, M 111.984		Center Bearing Support Kit	538995S
	1995.02-2006.05		Centre	Van RWD M 111.979, M 111.984		Center Bearing Support Kit	538995S
Sprinter 314D							
2.2 (105 kw)	2016.04-2018.12	6MT	Rear	Bus RWD 651955/651956	Trans. code:NSG 370;for OE No.:A9064102116	Propshaft	PS900368
	2016.04-2018.12	6MT	Rear	Chassis Cabin RWD 651955/651956	Trans. code:NSG 370;for OE No.:A9064102116	Propshaft	PS900368
	2016.04-2018.12	6MT	Rear	Bus RWD 651955/651956	Trans. code:ZF 6S-450	Propshaft	PS900558
	2016.04-2018.12	6MT	Rear	Chassis Cabin RWD 651955/651956	Trans. code:ZF 6S-450	Propshaft	PS900558
	2016.04-2018.12	6MT	Rear	Bus RWD 651955/651956	Trans. code:NSG 370;for OE No.:A9064100006	Propshaft	PS901367
	2016.04-2018.12	6MT	Rear	Chassis Cabin RWD 651955/651956	Trans. code:NSG 370;for OE No.:A9064100006	Propshaft	PS901367
	2016.04-2018.12	6MT	Rear	Van 4WD 651955/651956	Modelcode:906631,Wheelbase:3250 mm	Propshaft	PS901705
	2016.04-2018.12	AT	Rear	Bus RWD 651955/651956		Propshaft	PS900367
	2016.04-2018.12	AT	Rear	Chassis Cabin RWD 651955/651956		Propshaft	PS900367
	2016.04-2018.12	AT	-	Van 4WD 651955/651956	For Modelcode:906633,Wheelbase:3665 mm,with STEUERCODE HINTERACHSE TELLERRAD 215,Trans. type:7G-TRONIC PLUS	Propshaft	PS901685
	2016.04-2018.12	AT	-	Van 4WD 651955/651956	For Modelcode:906633,Wheelbase:3665 mm,without STEUERCODE HINTERACHSE TELLERRAD 215,Trans. type:7G-TRONIC PLUS	Propshaft	PS901708
	2016.04-2018.12		Centre	Bus RWD 651955/651956		Center Bearing Support	538627
	2016.04-2018.12		Centre	Chassis Cabin RWD 651955/651956		Center Bearing Support	538627
	2016.04-2018.12		Centre	Van 4WD 651955/651956		Center Bearing Support	538627
	2016.04-2018.12		Centre	Bus RWD 651955/651956		Center Bearing Support	538635
	2016.04-2018.12		Centre	Chassis Cabin RWD 651955/651956		Center Bearing Support	538635
	2016.04-2018.12		Centre	Van 4WD 651955/651956		Center Bearing Support	538635
	2016.04-2018.12		Front	Bus RWD 651955/651956		Center Bearing Support Kit	538681S
	2016.04-2018.12		Front	Chassis Cabin RWD 651955/651956		Center Bearing Support Kit	538681S
	2016.04-2018.12		Front	Van 4WD 651955/651956		Center Bearing Support Kit	538681S
	2016.04-2018.12		Centre	Bus RWD 651955/651956		Center Bearing Support Kit	538693S
	2016.04-2018.12		Centre	Chassis Cabin RWD 651955/651956		Center Bearing Support Kit	538693S
	2016.04-2018.12		Centre	Van 4WD 651955/651956		Center Bearing Support Kit	538693S
	2016.04-2018.12		Front;Rear	Bus RWD 651955/651956		Flexible Coupling	533884
	2016.04-2018.12		Front;Rear	Chassis Cabin RWD 651955/651956		Flexible Coupling	533884

	YEAR	TRANSM.	FITTING POSITION	BODY STYLE & DRIVE TYPE & ENGINE	REMARKS	PRODUCT	GSP Ref.
MERCEDES-BENZ							
Sprinter 314D							
2.2 (105 kw)	2016.04-2018.12		Front;Rear	Van 4WD 651955/651956		Flexible Coupling	533884
	2016.04-2018.12		Front;Rear	Bus RWD 651955/651956		Flexible Coupling Kit	537832S
	2016.04-2018.12		Front;Rear	Chassis Cabin RWD 651955/651956		Flexible Coupling Kit	537832S
	2016.04-2018.12		Front;Rear	Van 4WD 651955/651956		Flexible Coupling Kit	537832S
	2016.05-2018.12	5AT/6MT	Rear	Bus 4WD 651955/651956	Modelcode:906731,Wheelbase:3250 mm	Propshaft	PS901705
	2016.05-2018.12	6MT	Rear	Van RWD 651955/651956	Trans. code:NSG 370;for OE No.:A9064102116	Propshaft	PS900368
	2016.05-2018.12	6MT	Rear	Chassis Cabin 4WD 651955/651956	Model code:906.133/906.233,Trans. code:NSG 370	Propshaft	PS900368
	2016.05-2018.12	6MT	Rear	Van RWD 651955/651956	Trans. code:ZF 6S-450	Propshaft	PS900558
	2016.05-2018.12	6MT	Rear	Van RWD 651955/651956	Trans. code:NSG 370;for OE No.:A9064100006	Propshaft	PS901367
	2016.05-2018.12	7AT/6MT	Rear	Chassis Cabin 4WD 651955/651956	Modelcode:906131/906231,Wheelbase:3250 mm	Propshaft	PS901705
	2016.05-2018.12	AT	Rear	Van RWD 651955/651956		Propshaft	PS900367
	2016.05-2018.12	AT	-	Bus 4WD 651955/651956	For Modelcode:906732,Wheelbase:3665 mm;with STEUERCODE HINTERACHSE TELLERRAD 215,Trans. type:7G-TRONIC PLUS	Propshaft	PS901685
	2016.05-2018.12	AT	-	Chassis Cabin 4WD 651955/651956	For Modelcode:906.933/906.133,Wheelbase:3665 mm;with STEUERCODE HINTERACHSE TELLERRAD 215,Trans. type:7G-TRONIC PLUS	Propshaft	PS901685
	2016.05-2018.12	AT	-	Bus 4WD 651955/651956	For Modelcode:906732,Wheelbase:3665 mm;without STEUERCODE HINTERACHSE TELLERRAD 215,Trans. type:7G-TRONIC PLUS	Propshaft	PS901708
	2016.05-2018.12	AT	-	Chassis Cabin 4WD 651955/651956	For Modelcode:906.933/906.133,Wheelbase:1665 mm;without STEUERCODE HINTERACHSE TELLERRAD 215,Trans. type:7G-TRONIC PLUS	Propshaft	PS901708
	2016.05-2018.12		Centre	Van RWD 651955/651956		Center Bearing Support	538627
	2016.05-2018.12		Centre	Bus 4WD 651955/651956		Center Bearing Support	538627
	2016.05-2018.12		Centre	Chassis Cabin 4WD 651955/651956		Center Bearing Support	538627
	2016.05-2018.12		Centre	Van RWD 651955/651956		Center Bearing Support	538635
	2016.05-2018.12		Centre	Bus 4WD 651955/651956		Center Bearing Support	538635
	2016.05-2018.12		Centre	Chassis Cabin 4WD 651955/651956		Center Bearing Support	538635
	2016.05-2018.12		Front	Van RWD 651955/651956		Center Bearing Support Kit	538681S
	2016.05-2018.12		Front	Bus 4WD 651955/651956		Center Bearing Support Kit	538681S
	2016.05-2018.12		Front	Chassis Cabin 4WD 651955/651956		Center Bearing Support Kit	538681S
	2016.05-2018.12		Centre	Van RWD 651955/651956		Center Bearing Support Kit	538693S
	2016.05-2018.12		Centre	Bus 4WD 651955/651956		Center Bearing Support Kit	538693S
	2016.05-2018.12		Centre	Chassis Cabin 4WD 651955/651956		Center Bearing Support Kit	538693S
	2016.05-2018.12		Front;Rear	Van RWD 651955/651956		Flexible Coupling	533884
	2016.05-2018.12		Front;Rear	Bus 4WD 651955/651956		Flexible Coupling	533884
	2016.05-2018.12		Front;Rear	Chassis Cabin 4WD 651955/651956		Flexible Coupling	533884
	2016.05-2018.12		Front;Rear	Van RWD 651955/651956		Flexible Coupling Kit	537832S
	2016.05-2018.12		Front;Rear	Bus 4WD 651955/651956		Flexible Coupling Kit	537832S
	2016.05-2018.12		Front;Rear	Chassis Cabin 4WD 651955/651956		Flexible Coupling Kit	537832S
	2018.02-		Centre	Van RWD 651958		Center Bearing Support	538627
	2018.02-		Centre	Chassis Cabin RWD 651958		Center Bearing Support	538627
	2018.02-		Centre	Bus RWD 651958		Center Bearing Support	538627
	2018.02-		Centre	Bus RWD 651958		Center Bearing Support Kit	538693S
	2018.02-		Centre	Van RWD 651958		Center Bearing Support Kit	539925S
	2018.02-		Centre	Chassis Cabin RWD 651958		Center Bearing Support Kit	539925S
	2018.02-		Front;Rear	Van RWD 651958		Flexible Coupling	533884
	2018.02-		Front;Rear	Chassis Cabin RWD 651958		Flexible Coupling	533884
	2018.02-		Front;Rear	Bus RWD 651958		Flexible Coupling	533884
	2019.01-2021.12		Centre	Van 4WD 651958		Center Bearing Support	538627
	2019.01-2021.12		Centre	Chassis Cabin 4WD 651958		Center Bearing Support	538627
	2019.01-2021.12		Centre	Bus 4WD 651958		Center Bearing Support	538627
	2019.01-2021.12		Centre	Van 4WD 651958		Center Bearing Support Kit	538693S
	2019.01-2021.12		Centre	Chassis Cabin 4WD 651958		Center Bearing Support Kit	538693S
	2019.01-2021.12		Centre	Bus 4WD 651958		Center Bearing Support Kit	538693S
Sprinter 315							
2.2 (110 kw)	2014.12-		Rear	Van RWD OM 651.955	For Modelcode:906.635/906.637	Propshaft	PS901591
Sprinter 315D							
2.0 (110 kw)	2020.06-		Centre	Chassis Cabin RWD 654920		Center Bearing Support	538627
	2020.06-		Centre	Van RWD 654920		Center Bearing Support	538627
	2020.06-		Centre	Van RWD 654920		Center Bearing Support Kit	538693S
	2020.06-		Centre	Chassis Cabin RWD 654920		Center Bearing Support Kit	539925S
	2021.10-		Centre	Bus RWD 654920		Center Bearing Support	538627
	2021.10-		Centre	Bus RWD 654920		Center Bearing Support Kit	538693S
2.2 (110 kw)	2006.06-2009.12	MT	Front	Bus RWD 646986/646989/646990	Chassis no. to:N478535/E057183	Propshaft	PS900365
	2006.06-2009.12	MT	Front	Chassis Cabin RWD 646986/646989/646990	Chassis no. to:N478535/E057183	Propshaft	PS900365
	2006.06-2009.12	MT	Front	Van RWD 646986/646989/646990	Chassis no. to:N478535/E057183	Propshaft	PS900365
	2006.06-2009.12	6MT	Rear	Bus RWD 646986/646989/646990	Trans. code:NSG 370	Propshaft	PS900368
	2006.06-2009.12	6MT	Rear	Chassis Cabin RWD 646986/646989/646990	Trans. code:NSG 370	Propshaft	PS900368
	2006.06-2009.12	6MT	Rear	Van RWD 646986/646989/646990	For Modelcode::906633,Trans. code:NSG 370	Propshaft	PS900368
	2006.06-2009.12	6MT	Rear	Bus RWD 646986/646989/646990	Trans. code:TSG 360;for OE NO.:A9064105806	Propshaft	PS900550

	YEAR	TRANSM.	FITTING POSITION	BODY STYLE & DRIVE TYPE & ENGINE	REMARKS	PRODUCT	GSP Ref.
MERCEDES-BENZ							
Sprinter 315D							
2.2 (110 kw)	2006.06-2009.12	6MT	Rear	Chassis Cabin RWD 646986/646989/646990	Trans. code:TSG 360;for OE NO.:A9064105806	Propshaft	PS900550
	2006.06-2009.12	6MT	Rear	Van RWD 646986/646989/646990	For Modelcode::906633,Trans. code:ECO GEAR 360	Propshaft	PS900550
	2006.06-2009.12	6MT	Rear	Bus RWD 646986/646989/646990	Trans. code:ZF 6S-450	Propshaft	PS900558
	2006.06-2009.12	6MT	Rear	Chassis Cabin RWD 646986/646989/646990	Trans. code:ZF 6S-450	Propshaft	PS900558
	2006.06-2009.12	6MT	Rear	Van RWD 646986/646989/646990	For Modelcode::906635/906637	Propshaft	PS900558
	2006.06-2009.12	6MT	Rear	Bus RWD 646986/646989/646990	Chassis no. to 9 9074249 0946029,Engine Code:OM 651 DK20 LA,Trans. code:TSG 360,For OE no.:A9064105806	Propshaft	PS901365
	2006.06-2009.12	6MT	Rear	Chassis Cabin RWD 646986/646989/646990	Chassis no. to 9 9074249 0946029,Engine Code:OM 651 DK20 LA,Trans. code:TSG 360,For OE no.:A9064105806	Propshaft	PS901365
	2006.06-2009.12	6MT	Rear	Van RWD 646986/646989/646990	For Modelcode::906635/906637,wheel base:4325 mm	Propshaft	PS901365
	2006.06-2009.12	6MT	Rear	Van RWD 646986/646989/646990	For Modelcode::906631,Trans. code:TSG 370	Propshaft	PS901858
	2006.06-2009.12	AT	Rear	Bus RWD 646986/646989/646990	for OE No.:9064100016	Propshaft	PS900367
	2006.06-2009.12	AT	Rear	Chassis Cabin RWD 646986/646989/646990		Propshaft	PS900367
	2006.06-2009.12	AT	Rear	Van RWD 646986/646989/646990	For Modelcode:906.635/906.637	Propshaft	PS900367
	2006.06-2009.12	AT	Rear	Bus RWD 646986/646989/646990	For Modelcode:906.735;for OE No.:A9064107516	Propshaft	PS901591
	2006.06-2009.12	AT	Rear	Van RWD 646986/646989/646990	For Modelcode:906.635/906.637	Propshaft	PS901591
	2006.06-2009.12	6MT	-	Van RWD 646986/646989/646990	For Modelcode:906631,Trans. code:TSG 360	Propshaft	PS901829
	2006.06-2009.12		Front	Chassis Cabin RWD 646986/646989/646990		Center Bearing Support	538649
	2006.06-2009.12		Centre	Bus RWD 646986/646989/646990		Center Bearing Support	538627
	2006.06-2009.12		Centre	Chassis Cabin RWD 646986/646989/646990		Center Bearing Support	538627
	2006.06-2009.12		Centre	Van RWD 646986/646989/646990		Center Bearing Support	538627
	2006.06-2009.12		Centre	Bus RWD 646986/646989/646990		Center Bearing Support	538635
	2006.06-2009.12		Centre	Chassis Cabin RWD 646986/646989/646990		Center Bearing Support	538635
	2006.06-2009.12		Centre	Van RWD 646986/646989/646990		Center Bearing Support	538635
	2006.06-2009.12		Front	Bus RWD 646986/646989/646990		Center Bearing Support Kit	538681S
	2006.06-2009.12		Front	Chassis Cabin RWD 646986/646989/646990		Center Bearing Support Kit	538681S
	2006.06-2009.12		Front	Van RWD 646986/646989/646990		Center Bearing Support Kit	538681S
	2006.06-2009.12		Centre	Bus RWD 646986/646989/646990		Center Bearing Support Kit	538680S
	2006.06-2009.12		Centre	Chassis Cabin RWD 646986/646989/646990		Center Bearing Support Kit	538680S
	2006.06-2009.12		Centre	Van RWD 646986/646989/646990		Center Bearing Support Kit	538680S
	2006.06-2009.12		Centre	Bus RWD 646986/646989/646990		Center Bearing Support Kit	538693S
	2006.06-2009.12		Centre	Chassis Cabin RWD 646986/646989/646990		Center Bearing Support Kit	538693S
	2006.06-2009.12		Centre	Van RWD 646986/646989/646990		Center Bearing Support Kit	538693S
	2006.06-2009.12		Front;Rear	Bus RWD 646986/646989/646990		Flexible Coupling	533884
	2006.06-2009.12		Front;Rear	Chassis Cabin RWD 646986/646989/646990		Flexible Coupling	533884
	2006.06-2009.12		Front;Rear	Van RWD 646986/646989/646990		Flexible Coupling	533884
	2006.06-2009.12		Front;Rear	Bus RWD 646986/646989/646990	Inner diameter:50mm	Flexible Coupling Kit	512673S
	2006.06-2009.12		Front;Rear	Bus RWD 646986/646989/646990	Inner diameter:69.5mm	Flexible Coupling Kit	537832S
	2006.06-2009.12		Front;Rear	Chassis Cabin RWD 646986/646989/646990		Flexible Coupling Kit	537832S
	2006.06-2009.12		Front;Rear	Van RWD 646986/646989/646990		Flexible Coupling Kit	537832S
	2008.02-2009.12	AT	Front	Bus 4WD 646986/646989/646990	For Modelcode:906.735	Propshaft	PS900632
	2008.02-2009.12	AT	Front	Van 4WD 646986/646989/646990	For Modelcode:906.635/906.637	Propshaft	PS900632
	2008.02-2009.12	6MT	Rear	Bus 4WD 646986/646989/646990	For Modelcode:906733,with STEUERCODE HINTERACHSE TELLERRAD 215	Propshaft	PS901365
	2008.02-2009.12	6MT	Rear	Van 4WD 646986/646989/646990	For Modelcode:906637/906635	Propshaft	PS901855
	2008.02-2009.12	6MT	Rear	Bus 4WD 646986/646989/646990	For Modelcode:906733,without STEUERCODE HINTERACHSE TELLERRAD 215	Propshaft	PS901857
	2008.02-2009.12	6MT	Rear	Chassis Cabin 4WD 646986/646989/646990	For Modelcode:906233/906133	Propshaft	PS901857
	2008.02-2009.12	6MT	Rear	Van 4WD 646986/646989/646990	For Modelcode:906633	Propshaft	PS901857
	2008.02-2009.12	6MT	Rear	Bus 4WD 646986/646989/646990	For Modelcode:906733,with STEUERCODE HINTERACHSE TELLERRAD 215	Propshaft	PS901986
	2008.02-2009.12	AT	Rear	Bus 4WD 646986/646989/646990	For Modelcode:906733,Wheelbase:3665 mm,with STEUERCODE HINTERACHSE TELLERRAD 215,Trans. type:7G-TRONIC PLUS	Propshaft	PS901685
	2008.02-2009.12	AT	Rear	Bus 4WD 646986/646989/646990	For Modelcode:906733,Wheelbase:3665 mm,without STEUERCODE HINTERACHSE TELLERRAD 215,Trans. type:7G-TRONIC PLUS	Propshaft	PS901708
	2008.02-2009.12	AT	Rear	Bus 4WD 646986/646989/646990	For Modelcode:906733,Wheelbase:3665 mm,with STEUERCODE HINTERACHSE TELLERRAD 215,without 7G-TRONIC PLUS	Propshaft	PS901983
	2008.02-2009.12	MT	Rear	Van 4WD 646986/646989/646990	For Modelcode:906.635/906.637	Propshaft	PS901591
	2008.02-2009.12	AT	-	Chassis Cabin 4WD 646986/646989/646990	For Modelcode:906233/906133,Wheelbase:3665 mm,with STEUERCODE HINTERACHSE TELLERRAD 215,Trans. type:7G-TRONIC PLUS	Propshaft	PS901685
	2008.02-2009.12	AT	-	Van 4WD 646986/646989/646990	For Modelcode:906633,Wheelbase:3665 mm,with STEUERCODE HINTERACHSE TELLERRAD 215,Trans. type:7G-TRONIC PLUS	Propshaft	PS901685
	2008.02-2009.12	AT	-	Chassis Cabin 4WD 646986/646989/646990	For Modelcode:906233/906133,Wheelbase:3665 mm,without STEUERCODE HINTERACHSE TELLERRAD 215,Trans. type:7G-TRONIC PLUS	Propshaft	PS901708
	2008.02-2009.12	AT	-	Van 4WD 646986/646989/646990	For Modelcode:906633,Wheelbase:3665 mm,without STEUERCODE HINTERACHSE TELLERRAD 215,Trans. type:7G-TRONIC PLUS	Propshaft	PS901708
	2008.02-2009.12	AT/6MT	-	Van 4WD 646986/646989/646990	For Modelcode:906633,Transmission:6MT,with STEUERCODE HINTERACHSE TELLERRAD 215	Propshaft	PS901366
	2008.02-2009.12		Centre	Bus 4WD 646986/646989/646990		Center Bearing Support	538627
	2008.02-2009.12		Centre	Chassis Cabin 4WD 646986/646989/646990		Center Bearing Support	538627
	2008.02-2009.12		Centre	Van 4WD 646986/646989/646990		Center Bearing Support	538627
	2008.02-2009.12		Centre	Bus 4WD 646986/646989/646990		Center Bearing Support	538635
	2008.02-2009.12		Centre	Chassis Cabin 4WD 646986/646989/646990		Center Bearing Support	538635
	2008.02-2009.12		Centre	Van 4WD 646986/646989/646990		Center Bearing Support	538635
	2008.02-2009.12		Front	Bus 4WD 646986/646989/646990		Center Bearing Support Kit	538681S
	2008.02-2009.12		Front	Chassis Cabin 4WD 646986/646989/646990		Center Bearing Support Kit	538681S
	2008.02-2009.12		Front	Van 4WD 646986/646989/646990		Center Bearing Support Kit	538681S

	YEAR	TRANSM.	FITTING POSITION	BODY STYLE & DRIVE TYPE & ENGINE	REMARKS	PRODUCT	GSP Ref.
MERCEDES-BENZ							
Sprinter 315D							
2.2 (110 kw)	2008.02-2009.12		Centre	Bus 4WD 646986/646989/646990		Center Bearing Support Kit	538680S
	2008.02-2009.12		Centre	Chassis Cabin 4WD 646986/646989/646990		Center Bearing Support Kit	538680S
	2008.02-2009.12		Centre	Van 4WD 646986/646989/646990		Center Bearing Support Kit	538680S
	2008.02-2009.12		Centre	Bus 4WD 646986/646989/646990		Center Bearing Support Kit	538693S
	2008.02-2009.12		Centre	Chassis Cabin 4WD 646986/646989/646990		Center Bearing Support Kit	538693S
	2008.02-2009.12		Centre	Van 4WD 646986/646989/646990		Center Bearing Support Kit	538693S
	2008.02-2009.12		Front;Rear	Bus 4WD 646986/646989/646990		Flexible Coupling	533884
	2008.02-2009.12		Front;Rear	Chassis Cabin 4WD 646986/646989/646990		Flexible Coupling	533884
	2008.02-2009.12		Front;Rear	Van 4WD 646986/646989/646990		Flexible Coupling	533884
	2008.02-2009.12		Front;Rear	Bus 4WD 646986/646989/646990		Flexible Coupling Kit	537832S
	2008.02-2009.12		Front;Rear	Chassis Cabin 4WD 646986/646989/646990		Flexible Coupling Kit	537832S
	2008.02-2009.12		Front;Rear	Van 4WD 646986/646989/646990		Flexible Coupling Kit	537832S
Sprinter 316							
1.8 (115 kw)	2008.09-2018.12	6MT	Front	Van RWD 271951	Date from:2011.02,Chassis no. from:S 567427,Trans. code:NSG 400	Propshaft	PS901674
	2008.09-2018.12	6MT	Rear	Van RWD 271951	Trans. code:ZF 6S-450	Propshaft	PS900558
	2008.09-2018.12	6MT	Rear	Chassis Cabin RWD 271951	Trans. code:ZF 6S-450,Wheel base:4325 mm	Propshaft	PS900558
	2008.09-2018.12	6MT	Rear	Chassis Cabin RWD 271951	Model code:906133,Wheel base:3665 mm	Propshaft	PS901986
	2008.09-2018.12	AT	Rear	Chassis Cabin RWD 271951	Model code:906133	Propshaft	PS901983
	2008.09-2018.12		Centre	Van RWD 271951		Center Bearing Support	538627
	2008.09-2018.12		Centre	Chassis Cabin RWD 271951		Center Bearing Support	538627
	2008.09-2018.12		Centre	Van RWD 271951		Center Bearing Support	538635
	2008.09-2018.12		Centre	Chassis Cabin RWD 271951		Center Bearing Support	538635
	2008.09-2018.12		Centre	Chassis Cabin RWD 271951		Center Bearing Support Kit	538680S
	2008.09-2018.12		Centre	Van RWD 271951		Center Bearing Support Kit	538693S
	2008.09-2018.12		Centre	Chassis Cabin RWD 271951		Center Bearing Support Kit	538693S
	2008.09-2018.12		Front;Rear	Van RWD 271951		Flexible Coupling	533884
	2008.09-2018.12		Front;Rear	Chassis Cabin RWD 271951		Flexible Coupling	533884
	2008.09-2018.12		Front;Rear	Van RWD 271951		Flexible Coupling Kit	537832S
	2008.09-2018.12		Front;Rear	Chassis Cabin RWD 271951		Flexible Coupling Kit	537832S
	2009.03-2018.12	6MT	Front	Bus RWD 271951	Date from:2011.02,Chassis no. from:S 567427,Trans. code:NSG 400	Propshaft	PS901674
	2009.03-2018.12	6MT	Rear	Bus RWD 271951	Date from:2009.03,Trans. code:ZF 6S-450	Propshaft	PS900558
	2009.03-2018.12		Centre	Bus RWD 271951		Center Bearing Support	538627
	2009.03-2018.12		Centre	Bus RWD 271951		Center Bearing Support	538635
	2009.03-2018.12		Centre	Bus RWD 271951		Center Bearing Support Kit	538680S
	2009.03-2018.12		Centre	Bus RWD 271951		Center Bearing Support Kit	538693S
	2009.03-2018.12		Front;Rear	Bus RWD 271951		Flexible Coupling	533884
	2009.03-2018.12		Front;Rear	Bus RWD 271951		Flexible Coupling Kit	537832S
Sprinter 316 LGT							
1.8 (115 kw)	2011.01-2018.12	6MT	Front	Bus RWD 271951	Date from:2011.02,Chassis no. from:S 567427,Trans. code:NSG 400	Propshaft	PS901674
	2011.01-2018.12	6MT	Front	Van RWD 271951	Date from:2011.02,Chassis no. from:S 567427,Trans. code:NSG 400	Propshaft	PS901674
	2011.01-2018.12		Centre	Bus RWD 271951		Center Bearing Support	538627
	2011.01-2018.12		Centre	Chassis Cabin RWD 271951		Center Bearing Support	538627
	2011.01-2018.12		Centre	Van RWD 271951		Center Bearing Support	538627
	2011.01-2018.12		Centre	Bus RWD 271951		Center Bearing Support	538635
	2011.01-2018.12		Centre	Chassis Cabin RWD 271951		Center Bearing Support	538635
	2011.01-2018.12		Centre	Van RWD 271951		Center Bearing Support	538635
	2011.01-2018.12		Centre	Chassis Cabin RWD 271951		Center Bearing Support Kit	538680S
	2011.01-2018.12		Centre	Bus RWD 271951		Center Bearing Support Kit	538693S
	2011.01-2018.12		Centre	Chassis Cabin RWD 271951		Center Bearing Support Kit	538693S
	2011.01-2018.12		Centre	Van RWD 271951		Center Bearing Support Kit	538693S
	2011.01-2018.12		Front;Rear	Bus RWD 271951		Flexible Coupling	533884
	2011.01-2018.12		Front;Rear	Chassis Cabin RWD 271951		Flexible Coupling	533884
	2011.01-2018.12		Front;Rear	Van RWD 271951		Flexible Coupling	533884
	2011.01-2018.12		Front;Rear	Bus RWD 271951		Flexible Coupling Kit	537832S
	2011.01-2018.12		Front;Rear	Chassis Cabin RWD 271951		Flexible Coupling Kit	537832S
	2011.01-2018.12		Front;Rear	Van RWD 271951		Flexible Coupling Kit	537832S
Sprinter 316 NGT							
1.8 (115 kw)	2009.03-2018.12	6MT	Front	Bus RWD 271951NGT	Date from:2011.02,Chassis no. from:S 567427,Trans. code:NSG 400	Propshaft	PS901674
	2009.03-2018.12		Centre	Van RWD 271951NGT		Center Bearing Support	538627
	2009.03-2018.12		Centre	Chassis Cabin RWD 271951NGT		Center Bearing Support	538627
	2009.03-2018.12		Centre	Bus RWD 271951NGT		Center Bearing Support	538627
	2009.03-2018.12		Centre	Van RWD 271951NGT		Center Bearing Support	538635
	2009.03-2018.12		Centre	Chassis Cabin RWD 271951NGT		Center Bearing Support	538635
	2009.03-2018.12		Centre	Bus RWD 271951NGT		Center Bearing Support	538635

	YEAR	TRANSM.	FITTING POSITION	BODY STYLE & DRIVE TYPE & ENGINE	REMARKS	PRODUCT	GSP Ref.
MERCEDES-BENZ							
Sprinter 316 NGT							
1.8 (115 kw)	2009.03-2018.12		Centre	Van RWD 271951NGT		Center Bearing Support Kit	538680S
	2009.03-2018.12		Centre	Chassis Cabin RWD 271951NGT		Center Bearing Support Kit	538680S
	2009.03-2018.12		Centre	Van RWD 271951NGT		Center Bearing Support Kit	538693S
	2009.03-2018.12		Centre	Chassis Cabin RWD 271951NGT		Center Bearing Support Kit	538693S
	2009.03-2018.12		Centre	Bus RWD 271951NGT		Center Bearing Support Kit	538693S
	2009.03-2018.12		Front;Rear	Van RWD 271951NGT		Flexible Coupling	533884
	2009.03-2018.12		Front;Rear	Chassis Cabin RWD 271951NGT		Flexible Coupling	533884
	2009.03-2018.12		Front;Rear	Bus RWD 271951NGT		Flexible Coupling	533884
	2009.03-2018.12		Front;Rear	Van RWD 271951NGT		Flexible Coupling Kit	537832S
	2009.03-2018.12		Front;Rear	Chassis Cabin RWD 271951NGT		Flexible Coupling Kit	537832S
	2009.03-2018.12		Front;Rear	Bus RWD 271951NGT		Flexible Coupling Kit	537832S
Sprinter 316D							
2.2 (120 kw)	2008.02-2018.12	5AT/7AT/6MT	Rear	Chassis Cabin 4WD 651955/651956/651957	Modelcode:906131/906231,Wheelbase:3250 mm	Propshaft	PS901705
	2008.02-2018.12	5AT/7AT/6MT	Rear	Van 4WD 651955/651956/651957	Modelcode:906631,Wheelbase:3250 mm	Propshaft	PS901705
	2008.02-2018.12	AT	-	Chassis Cabin 4WD 651955/651956/651957	For Modelcode:906231/906131,Wheelbase:3665 mm,with STEUERKODE HINTERACHSE TELLERRAD 215,Trans. type:7G-TRONIC PLUS	Propshaft	PS901685
	2008.02-2018.12	AT	-	Van 4WD 651955/651956/651957	For Modelcode:906631,Wheelbase:3665 mm,with STEUERKODE HINTERACHSE TELLERRAD 215,Trans. type:7G-TRONIC PLUS	Propshaft	PS901685
	2008.02-2018.12	AT	-	Chassis Cabin 4WD 651955/651956/651957	For Modelcode:906231/906131,Wheelbase:3665 mm,without STEUERKODE HINTERACHSE TELLERRAD 215,Trans. type:7G-TRONIC PLUS	Propshaft	PS901708
	2008.02-2018.12	AT	-	Van 4WD 651955/651956/651957	For Modelcode:906631,Wheelbase:3665 mm,without STEUERKODE HINTERACHSE TELLERRAD 215,Trans. type:7G-TRONIC PLUS	Propshaft	PS901708
	2008.02-2018.12		Centre	Chassis Cabin 4WD 651955/651956/651957		Center Bearing Support	538627
	2008.02-2018.12		Centre	Van 4WD 651955/651956/651957		Center Bearing Support	538627
	2008.02-2018.12		Centre	Chassis Cabin 4WD 651955/651956/651957		Center Bearing Support	538635
	2008.02-2018.12		Centre	Van 4WD 651955/651956/651957		Center Bearing Support	538635
	2008.02-2018.12		Front	Chassis Cabin 4WD 651955/651956/651957		Center Bearing Support Kit	538681S
	2008.02-2018.12		Front	Van 4WD 651955/651956/651957		Center Bearing Support Kit	538681S
	2008.02-2018.12		Centre	Chassis Cabin 4WD 651955/651956/651957		Center Bearing Support Kit	538680S
	2008.02-2018.12		Centre	Van 4WD 651955/651956/651957		Center Bearing Support Kit	538680S
	2008.02-2018.12		Centre	Chassis Cabin 4WD 651955/651956/651957		Center Bearing Support Kit	538693S
	2008.02-2018.12		Centre	Van 4WD 651955/651956/651957		Center Bearing Support Kit	538693S
	2008.02-2018.12		Front;Rear	Chassis Cabin 4WD 651955/651956/651957		Flexible Coupling	533884
	2008.02-2018.12		Front;Rear	Van 4WD 651955/651956/651957		Flexible Coupling	533884
	2008.02-2018.12		Front;Rear	Chassis Cabin 4WD 651955/651956/651957		Flexible Coupling Kit	537832S
	2008.02-2018.12		Front;Rear	Van 4WD 651955/651956/651957		Flexible Coupling Kit	537832S
	2009.03-2018.12	AT	Front	Van RWD 651955/651956/651957	Chassis no. from:S567427,Chassis no. to:S567426/S568526;Wheelbase:3250 mm;for OE No.:A9064102101	Propshaft	PS901464
	2009.03-2018.12	AT	Front	Chassis Cabin RWD 651955/651956/651957	Chassis no. from:N478536,Chassis no. to:E057183/N478535;Wheelbase:3250 mm	Propshaft	PS901464
	2009.03-2018.12	6MT	Rear	Van RWD 651955/651956/651957	Trans. code:NSG 370;for OE No.:A9064100106	Propshaft	PS900368
	2009.03-2018.12	6MT	Rear	Chassis Cabin RWD 651955/651956/651957	Trans. code:NSG 370;for OE No.:A9064102116	Propshaft	PS900368
	2009.03-2018.12	6MT	Rear	Van RWD 651955/651956/651957	Trans. code:TSG 360;for OE NO.:A9064105806	Propshaft	PS900550
	2009.03-2018.12	6MT	Rear	Chassis Cabin RWD 651955/651956/651957		Propshaft	PS900550
	2009.03-2018.12	6MT	Rear	Van RWD 651955/651956/651957	Trans. code:ZF 6S-450	Propshaft	PS900558
	2009.03-2018.12	6MT	Rear	Chassis Cabin RWD 651955/651956/651957	Trans. code:ZF 6S-450	Propshaft	PS900558
	2009.03-2018.12	6MT	Rear	Van RWD 651955/651956/651957	Date from:2011.02,Chassis no. from:S 567427E 056829,Trans. code:NSG 370;for OE No.:A9064100106	Propshaft	PS901367
	2009.03-2018.12	6MT	Rear	Chassis Cabin RWD 651955/651956/651957	Date from:2011.02,Chassis no. from:S 567427E 056829,Trans. code:NSG 370;for OE No.:A9064100106	Propshaft	PS901367
	2009.03-2018.12	6MT	Rear	Chassis Cabin RWD 651955/651956/651957	Date to:2011.02,Chassis no.from:N 418325,Chassis no.to:N 418535,Transm.:Type:TSG 360	Propshaft	PS901684
	2009.03-2018.12	AT	Rear	Van RWD 651955/651956/651957	Date from:2011.04,Chassis no. from:56829,from 573459	Propshaft	PS900559
	2009.03-2018.12	AT	Rear	Chassis Cabin RWD 651955/651956/651957	Date from:2011.04,Chassis no. from:56829,from 573459	Propshaft	PS900559
	2009.03-2018.12	MT	Rear	Van RWD 651955/651956/651957	Engine Code:OM 651.955;Trans. code:TSG 360;for OE NO.:A9064105406	Propshaft	PS901365
	2009.03-2018.12		Centre	Van RWD 651955/651956/651957		Center Bearing Support	538627
	2009.03-2018.12		Centre	Chassis Cabin RWD 651955/651956/651957		Center Bearing Support	538627
	2009.03-2018.12		Centre	Van RWD 651955/651956/651957		Center Bearing Support	538635
	2009.03-2018.12		Centre	Chassis Cabin RWD 651955/651956/651957		Center Bearing Support	538635
	2009.03-2018.12		Front	Van RWD 651955/651956/651957		Center Bearing Support Kit	538681S
	2009.03-2018.12		Front	Chassis Cabin RWD 651955/651956/651957		Center Bearing Support Kit	538681S
	2009.03-2018.12		Centre	Van RWD 651955/651956/651957		Center Bearing Support Kit	538680S
	2009.03-2018.12		Centre	Chassis Cabin RWD 651955/651956/651957		Center Bearing Support Kit	538680S
	2009.03-2018.12		Centre	Van RWD 651955/651956/651957		Center Bearing Support Kit	538693S
	2009.03-2018.12		Centre	Chassis Cabin RWD 651955/651956/651957		Center Bearing Support Kit	538693S
	2009.03-2018.12		Front;Rear	Van RWD 651955/651956/651957		Flexible Coupling	533884
	2009.03-2018.12		Front;Rear	Chassis Cabin RWD 651955/651956/651957		Flexible Coupling	533884
	2009.03-2018.12		Front;Rear	Van RWD 651955/651956/651957		Flexible Coupling Kit	537832S
	2009.03-2018.12		Front;Rear	Chassis Cabin RWD 651955/651956/651957		Flexible Coupling Kit	537832S
	2011.08-2018.12	6MT	Front	Bus RWD 651955/651956/651957	Chassis no. from:S 567427,Trans. code:NSG 400	Propshaft	PS901674
	2011.08-2018.12	6MT	Rear	Bus RWD 651955/651956/651957	Trans. code:NSG 370;for OE No.:A9064102116	Propshaft	PS900368
	2011.08-2018.12	6MT	Rear	Bus RWD 651955/651956/651957	Trans. code:TSG 360	Propshaft	PS900550
	2011.08-2018.12	6MT	Rear	Bus RWD 651955/651956/651957	Trans. code:ZF 6S-450	Propshaft	PS900558

	YEAR	TRANSM.	FITTING POSITION	BODY STYLE & DRIVE TYPE & ENGINE	REMARKS	PRODUCT	GSP Ref.
MERCEDES-BENZ							
Sprinter 316D							
2.2 (120 kw)	2011.08-2018.12	6MT	Rear	Bus RWD 651955/651956/651957	Date from:2011.02,Chassis no. from:S 5974237E 056829,Trans. code:NSG 370,for OE No.:A9064100006	Propshaft	PS901367
	2011.08-2018.12	AT	Rear	Bus RWD 651955/651956/651957	Chassis no. from:56829,from 573459	Propshaft	PS900559
	2011.08-2018.12	AT	-	Bus 4WD 651955/651956/651957	For Modelcode:906733,Wheelbase:3665 mm with STRUERCODE HINTERACHSE TELLERRAD 215,Trans. type:722.6NAC,PLUS	Propshaft	PS901685
	2011.08-2018.12	AT	-	Bus 4WD 651955/651956/651957	For Modelcode:906733,Wheelbase:3665 mm,without STRUERCODE HINTERACHSE TELLERRAD 215,Trans. type:722.7NGNAC,PLUS	Propshaft	PS901708
	2011.08-2018.12		Centre	Bus 4WD 651955/651956/651957		Center Bearing Support	538627
	2011.08-2018.12		Centre	Bus RWD 651955/651956/651957		Center Bearing Support	538627
	2011.08-2018.12		Centre	Bus 4WD 651955/651956/651957		Center Bearing Support	538635
	2011.08-2018.12		Centre	Bus RWD 651955/651956/651957		Center Bearing Support	538635
	2011.08-2018.12		Front	Bus 4WD 651955/651956/651957		Center Bearing Support Kit	538681S
	2011.08-2018.12		Front	Bus RWD 651955/651956/651957		Center Bearing Support Kit	538681S
	2011.08-2018.12		Centre	Bus 4WD 651955/651956/651957		Center Bearing Support Kit	538680S
	2011.08-2018.12		Centre	Bus RWD 651955/651956/651957		Center Bearing Support Kit	538680S
	2011.08-2018.12		Centre	Bus 4WD 651955/651956/651957		Center Bearing Support Kit	538693S
	2011.08-2018.12		Centre	Bus RWD 651955/651956/651957		Center Bearing Support Kit	538693S
	2011.08-2018.12		Front;Rear	Bus 4WD 651955/651956/651957		Flexible Coupling	533884
	2011.08-2018.12		Front;Rear	Bus RWD 651955/651956/651957		Flexible Coupling	533884
	2011.08-2018.12		Front;Rear	Bus RWD 651955/651956/651957	Inner diameter:50mm	Flexible Coupling Kit	512673S
	2011.08-2018.12		Front;Rear	Bus 4WD 651955/651956/651957		Flexible Coupling Kit	537832S
	2011.08-2018.12		Front;Rear	Bus RWD 651955/651956/651957	Inner diameter:69.5mm	Flexible Coupling Kit	537832S
	2018.02-		Centre	Van RWD 651958		Center Bearing Support	538627
	2018.02-		Centre	Chassis Cabin RWD 651958		Center Bearing Support	538627
	2018.02-		Centre	Bus RWD 651958		Center Bearing Support	538627
	2018.02-		Centre	Bus RWD 651958		Center Bearing Support Kit	538693S
	2018.02-		Centre	Van RWD 651958		Center Bearing Support Kit	539925S
	2018.02-		Centre	Chassis Cabin RWD 651958		Center Bearing Support Kit	539925S
	2018.02-		Front;Rear	Van RWD 651958		Flexible Coupling	533884
	2018.02-		Front;Rear	Chassis Cabin RWD 651958		Flexible Coupling	533884
	2018.02-		Front;Rear	Bus RWD 651958		Flexible Coupling	533884
	2019.01-2021.12		Centre	Van 4WD 651958		Center Bearing Support	538627
	2019.01-2021.12		Centre	Chassis Cabin 4WD 651958		Center Bearing Support	538627
	2019.01-2021.12		Centre	Bus 4WD 651958		Center Bearing Support	538627
	2019.01-2021.12		Centre	Van 4WD 651958		Center Bearing Support Kit	538693S
	2019.01-2021.12		Centre	Chassis Cabin 4WD 651958		Center Bearing Support Kit	538693S
	2019.01-2021.12		Centre	Bus 4WD 651958		Center Bearing Support Kit	538693S
2.7 (115 kw)	2000.04-2006.05	MT	Front	Bus RWD OM 612.981, OM 647.981	For Engine code:OM 612 DE LA,Trans. code:G 33-5/5;05-0,75	Propshaft	PS901377
	2000.04-2006.05	MT	Front	Van RWD OM 612.981, OM 647.981	For Engine code:OM 612 DE LA,Trans. code:G 33-5/5;05-0,75	Propshaft	PS901377
	2000.04-2006.05	MT	Front	Platform/Chassis RWD OM 612.981, OM 647.981	For Engine code:OM 612 DE LA,Trans. code:G 33-5/5;05-0,75	Propshaft	PS901377
	2000.04-2006.05		Centre	Bus RWD OM 612.981, OM 647.981		Center Bearing Support	539009
	2000.04-2006.05		Centre	Van RWD OM 612.981, OM 647.981		Center Bearing Support	539009
	2000.04-2006.05		Centre	Platform/Chassis RWD OM 612.981, OM 647.981		Center Bearing Support	539009
	2000.04-2006.05		Centre	Bus RWD OM 612.981, OM 647.981		Center Bearing Support Kit	538995S
	2000.04-2006.05		Centre	Van RWD OM 612.981, OM 647.981		Center Bearing Support Kit	538995S
	2000.04-2006.05		Centre	Platform/Chassis RWD OM 612.981, OM 647.981		Center Bearing Support Kit	538995S
	2001.02-2006.05		Centre	Van 4WD OM 612.981, OM 647.981		Center Bearing Support	539009
	2001.02-2006.05		Centre	Van 4WD OM 612.981, OM 647.981		Center Bearing Support Kit	538995S
	2002.08-2006.05		Centre	Bus 4WD OM 612.981, OM 647.981		Center Bearing Support	539009
	2002.08-2006.05		Centre	Platform/Chassis 4WD OM 612.981, OM 647.981		Center Bearing Support	539009
	2002.08-2006.05		Centre	Bus 4WD OM 612.981, OM 647.981		Center Bearing Support Kit	538995S
	2002.08-2006.05		Centre	Platform/Chassis 4WD OM 612.981, OM 647.981		Center Bearing Support Kit	538995S
Sprinter 317D							
2.0 (125 kw)	2020.06-		Centre	Chassis Cabin RWD 654920		Center Bearing Support	538627
	2020.06-		Centre	Van RWD 654920		Center Bearing Support	538627
	2020.06-		Centre	Van RWD 654920		Center Bearing Support Kit	538693S
	2020.06-		Centre	Chassis Cabin RWD 654920		Center Bearing Support Kit	539925S
	2021.10-		Centre	Bus RWD 654920		Center Bearing Support	538627
	2021.10-		Centre	Bus RWD 654920		Center Bearing Support Kit	538693S
Sprinter 318D							
3.0 (135 kw)	2006.06-2009.12	AT	Front	Van 4WD 642896/642986/642992/642993	For Modelcode:906.635/906.637	Propshaft	PS900632
	2006.06-2009.12	6MT	Rear	Chassis Cabin RWD 642896/642992/642993	Trans. code:NSG 370	Propshaft	PS900368
	2006.06-2009.12	6MT	Rear	Van RWD 642896/642986/642992/642993	For Modelcode::906633,Trans. code:NSG 370	Propshaft	PS900368
	2006.06-2009.12	6MT	Rear	Chassis Cabin RWD 642896/642992/642993	Trans. code:ZF 6S-450	Propshaft	PS900558
	2006.06-2009.12	6MT	Rear	Van 4WD 642896/642986/642992/642993	For Modelcode:906637/906635	Propshaft	PS901855
	2006.06-2009.12	6MT	Rear	Chassis Cabin 4WD 642896/642992/642993	For Modelcode:906233/906133	Propshaft	PS901857
	2006.06-2009.12	6MT	Rear	Van 4WD 642896/642986/642992/642993	For Modelcode:906633	Propshaft	PS901857

	YEAR	TRANSM.	FITTING POSITION	BODY STYLE & DRIVE TYPE & ENGINE	REMARKS	PRODUCT	GSP Ref.
MERCEDES-BENZ							
Sprinter 318D							
3.0 (135 kw)	2006.06-2009.12	6MT	Rear	Van RWD 642896/642986/642992/642993	For Modelcode::906631,Trans. code:TSG 370	Propshaft	PS901858
	2006.06-2009.12	AT	Rear	Chassis Cabin RWD 642896/642992/642993		Propshaft	PS900369
	2006.06-2009.12	AT	Rear	Van RWD 642896/642986/642992/642993	For Modelcode::906633	Propshaft	PS900369
	2006.06-2009.12	AT	Rear	Van RWD 642896/642986/642992/642993	For Modelcode:906.635/906.637	Propshaft	PS901591
	2006.06-2009.12	MT	Rear	Van 4WD 642896/642986/642992/642993	For Modelcode:906.635/906.637	Propshaft	PS901591
	2006.06-2009.12	6MT	-	Van RWD 642896/642986/642992/642993	For Modelcode:906631,Trans. code:TSG 360	Propshaft	PS901829
	2006.06-2009.12	AT	-	Chassis Cabin 4WD 642896/642992/642993	For Modelcode:906631/906133,Wheelbase:3665 mm with STEUERKODE HINTERACHSE TELLERRAD 215,Trans. type:7G-TRONIC PLUS	Propshaft	PS901685
	2006.06-2009.12	AT	-	Van 4WD 642896/642986/642992/642993	For Modelcode:906633,Wheelbase:3665 mm with STEUERKODE HINTERACHSE TELLERRAD 215,Trans. type:7G-TRONIC PLUS	Propshaft	PS901685
	2006.06-2009.12	AT	-	Chassis Cabin 4WD 642896/642992/642993	For Modelcode:906631/906133,Wheelbase:3665 mm without STEUERKODE HINTERACHSE TELLERRAD 215,Trans. type:7G-TRONIC PLUS	Propshaft	PS901708
	2006.06-2009.12	AT	-	Van 4WD 642896/642986/642992/642993	For Modelcode:906633,Wheelbase:3665 mm without STEUERKODE HINTERACHSE TELLERRAD 215,Trans. type:7G-TRONIC PLUS	Propshaft	PS901708
	2006.06-2009.12		Centre	Chassis Cabin RWD 642896/642992/642993		Center Bearing Support	538627
	2006.06-2009.12		Centre	Van RWD 642896/642986/642992/642993		Center Bearing Support	538627
	2006.06-2009.12		Centre	Chassis Cabin 4WD 642896/642992/642993		Center Bearing Support	538627
	2006.06-2009.12		Centre	Van 4WD 642896/642986/642992/642993		Center Bearing Support	538627
	2006.06-2009.12		Centre	Chassis Cabin RWD 642896/642992/642993		Center Bearing Support	538635
	2006.06-2009.12		Centre	Van RWD 642896/642986/642992/642993		Center Bearing Support	538635
	2006.06-2009.12		Centre	Chassis Cabin 4WD 642896/642992/642993		Center Bearing Support	538635
	2006.06-2009.12		Centre	Van 4WD 642896/642986/642992/642993		Center Bearing Support	538635
	2006.06-2009.12		Centre	Chassis Cabin RWD 642896/642992/642993		Center Bearing Support Kit	538680S
	2006.06-2009.12		Centre	Van RWD 642896/642986/642992/642993		Center Bearing Support Kit	538680S
	2006.06-2009.12		Centre	Chassis Cabin 4WD 642896/642992/642993		Center Bearing Support Kit	538680S
	2006.06-2009.12		Centre	Van 4WD 642896/642986/642992/642993		Center Bearing Support Kit	538680S
	2006.06-2009.12		Centre	Chassis Cabin RWD 642896/642992/642993		Center Bearing Support Kit	538693S
	2006.06-2009.12		Centre	Van RWD 642896/642986/642992/642993		Center Bearing Support Kit	538693S
	2006.06-2009.12		Centre	Chassis Cabin 4WD 642896/642992/642993		Center Bearing Support Kit	538693S
	2006.06-2009.12		Centre	Van 4WD 642896/642986/642992/642993		Center Bearing Support Kit	538693S
	2006.06-2009.12		Front;Rear	Chassis Cabin RWD 642896/642992/642993		Flexible Coupling	533884
	2006.06-2009.12		Front;Rear	Van RWD 642896/642986/642992/642993		Flexible Coupling	533884
	2006.06-2009.12		Front;Rear	Chassis Cabin 4WD 642896/642992/642993		Flexible Coupling	533884
	2006.06-2009.12		Front;Rear	Van 4WD 642896/642986/642992/642993		Flexible Coupling	533884
	2006.06-2009.12		Front;Rear	Chassis Cabin RWD 642896/642992/642993		Flexible Coupling Kit	537832S
	2006.06-2009.12		Front;Rear	Van RWD 642896/642986/642992/642993		Flexible Coupling Kit	537832S
	2006.06-2009.12		Front;Rear	Chassis Cabin 4WD 642896/642992/642993		Flexible Coupling Kit	537832S
	2006.06-2009.12		Front;Rear	Van 4WD 642896/642986/642992/642993		Flexible Coupling Kit	537832S
	2008.02-2009.12	5AT/6MT	Rear	Bus 4WD 642896/642986/642992/642993	Modelcode:906731,Wheelbase:3250 mm	Propshaft	PS901705
	2008.02-2009.12	6MT	Rear	Bus RWD 642896/642986/642992/642993	Trans. code:NSG 370	Propshaft	PS900368
	2008.02-2009.12	6MT	Rear	Bus RWD 642896/642986/642992/642993	Trans. code:ZF 6S-450	Propshaft	PS900558
	2008.02-2009.12	6MT	Rear	Bus 4WD 642896/642986/642992/642993	For Modelcode:906733	Propshaft	PS901857
	2008.02-2009.12	AT	Rear	Bus RWD 642896/642986/642992/642993	for OE No.:A9064100806	Propshaft	PS900369
	2008.02-2009.12	AT	Rear	Bus RWD 642896/642986/642992/642993	For Modelcode:906.735;for OE No.:A9064107516	Propshaft	PS901591
	2008.02-2009.12	AT	-	Bus 4WD 642896/642986/642992/642993	For Modelcode:906733,Wheelbase:3665 mm with STEUERKODE HINTERACHSE TELLERRAD 215,Trans. type:7G-TRONIC PLUS	Propshaft	PS901685
	2008.02-2009.12	AT	-	Bus 4WD 642896/642986/642992/642993	For Modelcode:906733,Wheelbase:3665 mm without STEUERKODE HINTERACHSE TELLERRAD 215,Trans. type:7G-TRONIC PLUS	Propshaft	PS901708
	2008.02-2009.12		Centre	Bus 4WD 642896/642986/642992/642993		Center Bearing Support	538627
	2008.02-2009.12		Centre	Bus RWD 642896/642986/642992/642993		Center Bearing Support	538627
	2008.02-2009.12		Centre	Bus 4WD 642896/642986/642992/642993		Center Bearing Support	538635
	2008.02-2009.12		Centre	Bus RWD 642896/642986/642992/642993		Center Bearing Support	538635
	2008.02-2009.12		Centre	Bus 4WD 642896/642986/642992/642993		Center Bearing Support Kit	538680S
	2008.02-2009.12		Centre	Bus RWD 642896/642986/642992/642993		Center Bearing Support Kit	538680S
	2008.02-2009.12		Centre	Bus 4WD 642896/642986/642992/642993		Center Bearing Support Kit	538693S
	2008.02-2009.12		Centre	Bus RWD 642896/642986/642992/642993		Center Bearing Support Kit	538693S
	2008.02-2009.12		Front;Rear	Bus 4WD 642896/642986/642992/642993		Flexible Coupling	533884
	2008.02-2009.12		Front;Rear	Bus RWD 642896/642986/642992/642993		Flexible Coupling	533884
	2008.02-2009.12		Front;Rear	Bus 4WD 642896/642986/642992/642993	Inner diameter:50mm	Flexible Coupling Kit	512673S
	2008.02-2009.12		Front;Rear	Bus RWD 642896/642986/642992/642993	Inner diameter:50mm	Flexible Coupling Kit	512673S
	2008.02-2009.12		Front;Rear	Bus 4WD 642896/642986/642992/642993	Inner diameter:69.5mm	Flexible Coupling Kit	537832S
	2008.02-2009.12		Front;Rear	Bus RWD 642896/642986/642992/642993	Inner diameter:69.5mm	Flexible Coupling Kit	537832S
Sprinter 319D							
2.0 (140 kw)	2021.10-		Centre	Bus RWD 654920		Center Bearing Support	538627
	2021.10-		Centre	Chassis Cabin RWD 654920		Center Bearing Support	538627
	2021.10-		Centre	Van RWD 654920		Center Bearing Support	538627
	2021.10-		Centre	Bus 4WD 654920		Center Bearing Support	538627
	2021.10-		Centre	Chassis Cabin 4WD 654920		Center Bearing Support	538627
	2021.10-		Centre	Van 4WD 654920		Center Bearing Support	538627
	2021.10-		Centre	Bus RWD 654920		Center Bearing Support Kit	538693S

	YEAR	TRANSM.	FITTING POSITION	BODY STYLE & DRIVE TYPE & ENGINE	REMARKS	PRODUCT	GSP Ref.
MERCEDES-BENZ **Sprinter 319D**							
2.0 (140 kw)	2021.10-		Centre	Chassis Cabin RWD 654920		Center Bearing Support Kit	538693S
	2021.10-		Centre	Van RWD 654920		Center Bearing Support Kit	538693S
	2021.10-		Centre	Bus 4WD 654920		Center Bearing Support Kit	538693S
	2021.10-		Centre	Chassis Cabin 4WD 654920		Center Bearing Support Kit	538693S
	2021.10-		Centre	Van 4WD 654920		Center Bearing Support Kit	538693S
3.0 (140 kw)	2009.03-2018.12	6MT	Front	Bus RWD 642896/642898/642986/642992	Date from:2011.02,Chassis no. from:S 567427,Trans. code:NSG 400	Propshaft	PS901674
	2009.03-2018.12	AT	Front	Bus RWD 642896/642898/642986/642992	Wheelbase:4325 mm	Propshaft	PS901444
	2009.03-2018.12	5AT/7AT/6MT	Rear	Van 4WD 642896/642898/642986/642992	Modelcode:906631,Wheelbase:3250 mm	Propshaft	PS901705
	2009.03-2018.12	5AT/7AT/6MT	Rear	Chassis Cabin 4WD 642896/642898/642992	Modelcode:906131/906231,Wheelbase:3250 mm	Propshaft	PS901705
	2009.03-2018.12	5AT/7AT/6MT	Rear	Bus 4WD 642896/642898/642986/642992	Modelcode:906731,Wheelbase:3250 mm	Propshaft	PS901705
	2009.03-2018.12	6MT	Rear	Van RWD 642896/642898/642986/642992	Trans. code:NSG 370;for OE No.:A9064102116	Propshaft	PS900368
	2009.03-2018.12	6MT	Rear	Chassis Cabin RWD 642896/642898/642992	Trans. code:NSG 370;for OE No.:A9064102116	Propshaft	PS900368
	2009.03-2018.12	6MT	Rear	Bus RWD 642896/642898/642986/642992	Trans. code:NSG 370;for OE No.:A9064102116	Propshaft	PS900368
	2009.03-2018.12	6MT	Rear	Van RWD 642896/642898/642986/642992	Trans. code:ZF 6S-450	Propshaft	PS900558
	2009.03-2018.12	6MT	Rear	Chassis Cabin RWD 642896/642898/642992	Trans. code:ZF 6S-450	Propshaft	PS900558
	2009.03-2018.12	6MT	Rear	Bus RWD 642896/642898/642986/642992	Trans. code:ZF 6S-450	Propshaft	PS900558
	2009.03-2018.12	6MT	Rear	Van RWD 642896/642898/642986/642992	Date from:2011.02,Chassis no. from:S 587427E 556829,Trans. code:NSG 370;for OE No.:A9064100066	Propshaft	PS901367
	2009.03-2018.12	6MT	Rear	Chassis Cabin RWD 642896/642898/642992	Date from:2011.02,Chassis no. from:S 587427E 556829,Trans. code:NSG 370;for OE No.:A9064100066	Propshaft	PS901367
	2009.03-2018.12	6MT	Rear	Bus RWD 642896/642898/642986/642992	Date from:2011.02,Chassis no. from:S 587427E 556829,Trans. code:NSG 370;for OE No.:A9064100066	Propshaft	PS901367
	2009.03-2018.12	AT	Rear	Van RWD 642896/642898/642986/642992	Wheelbase:3665 mm	Propshaft	PS900369
	2009.03-2018.12	AT	Rear	Chassis Cabin RWD 642896/642898/642992	Wheelbase:3665 mm	Propshaft	PS900369
	2009.03-2018.12	AT	Rear	Van 4WD 642896/642898/642986/642992		Propshaft	PS900369
	2009.03-2018.12	AT	Rear	Bus RWD 642896/642898/642986/642992	Wheelbase:3665 mm	Propshaft	PS900369
	2009.03-2018.12	AT	Rear	Bus RWD 642896/642898/642986/642992	Wheelbase:4325 mm,three parts	Propshaft	PS901445
	2009.03-2018.12	AT	-	Van 4WD 642896/642898/642986/642992	For Modelcode:906633,Wheelbase:3665 mm;with STRUBRCODE HINTERACHSE TELLERRAD 215,Trans. type:7G-TRONIC PLUS	Propshaft	PS901685
	2009.03-2018.12	AT	-	Chassis Cabin 4WD 642896/642898/642992	For Modelcode:906231/906131,Wheelbase:3665 mm;with STRUBRCODE HINTERACHSE TELLERRAD 215,Trans. type:7G-TRONIC PLUS	Propshaft	PS901685
	2009.03-2018.12	AT	-	Bus 4WD 642896/642898/642986/642992	For Modelcode:906733,Wheelbase:3665 mm;with STRUBRCODE HINTERACHSE TELLERRAD 215,Trans. type:7G-TRONIC PLUS	Propshaft	PS901685
	2009.03-2018.12	AT	-	Van 4WD 642896/642898/642986/642992	For Modelcode:906633,Wheelbase:3665 mm;without STRUBRCODE HINTERACHSE TELLERRAD 215,Trans. type:7G-TRONIC PLUS	Propshaft	PS901708
	2009.03-2018.12	AT	-	Chassis Cabin 4WD 642896/642898/642992	For Modelcode:906231/906131,Wheelbase:3665 mm;without STRUBRCODE HINTERACHSE TELLERRAD 215,Trans. type:7G-TRONIC PLUS	Propshaft	PS901708
	2009.03-2018.12	AT	-	Bus 4WD 642896/642898/642986/642992	For Modelcode:906733,Wheelbase:3665 mm;without STRUBRCODE HINTERACHSE TELLERRAD 215,Trans. type:7G-TRONIC PLUS	Propshaft	PS901708
	2009.03-2018.12		Centre	Van RWD 642896/642898/642986/642992		Center Bearing Support	538627
	2009.03-2018.12		Centre	Chassis Cabin RWD 642896/642898/642992		Center Bearing Support	538627
	2009.03-2018.12		Centre	Van 4WD 642896/642898/642986/642992		Center Bearing Support	538627
	2009.03-2018.12		Centre	Chassis Cabin 4WD 642896/642898/642992		Center Bearing Support	538627
	2009.03-2018.12		Centre	Bus 4WD 642896/642898/642986/642992		Center Bearing Support	538627
	2009.03-2018.12		Centre	Bus RWD 642896/642898/642986/642992		Center Bearing Support	538627
	2009.03-2018.12		Centre	Van RWD 642896/642898/642986/642992		Center Bearing Support	538635
	2009.03-2018.12		Centre	Chassis Cabin RWD 642896/642898/642992		Center Bearing Support	538635
	2009.03-2018.12		Centre	Van 4WD 642896/642898/642986/642992		Center Bearing Support	538635
	2009.03-2018.12		Centre	Chassis Cabin 4WD 642896/642898/642992		Center Bearing Support	538635
	2009.03-2018.12		Centre	Bus 4WD 642896/642898/642986/642992		Center Bearing Support	538635
	2009.03-2018.12		Centre	Bus RWD 642896/642898/642986/642992		Center Bearing Support	538635
	2009.03-2018.12		Centre	Van RWD 642896/642898/642986/642992		Center Bearing Support Kit	538680S
	2009.03-2018.12		Centre	Chassis Cabin RWD 642896/642898/642992		Center Bearing Support Kit	538680S
	2009.03-2018.12		Centre	Van 4WD 642896/642898/642986/642992		Center Bearing Support Kit	538680S
	2009.03-2018.12		Centre	Chassis Cabin 4WD 642896/642898/642992		Center Bearing Support Kit	538680S
	2009.03-2018.12		Centre	Bus 4WD 642896/642898/642986/642992		Center Bearing Support Kit	538680S
	2009.03-2018.12		Centre	Bus RWD 642896/642898/642986/642992		Center Bearing Support Kit	538680S
	2009.03-2018.12		Centre	Van RWD 642896/642898/642986/642992		Center Bearing Support Kit	538693S
	2009.03-2018.12		Centre	Chassis Cabin RWD 642896/642898/642992		Center Bearing Support Kit	538693S
	2009.03-2018.12		Centre	Van 4WD 642896/642898/642986/642992		Center Bearing Support Kit	538693S
	2009.03-2018.12		Centre	Chassis Cabin 4WD 642896/642898/642992		Center Bearing Support Kit	538693S
	2009.03-2018.12		Centre	Bus 4WD 642896/642898/642986/642992		Center Bearing Support Kit	538693S
	2009.03-2018.12		Centre	Bus RWD 642896/642898/642986/642992		Center Bearing Support Kit	538693S
	2009.03-2018.12		Front;Rear	Van RWD 642896/642898/642986/642992		Flexible Coupling	533884
	2009.03-2018.12		Front;Rear	Chassis Cabin RWD 642896/642898/642992		Flexible Coupling	533884
	2009.03-2018.12		Front;Rear	Van 4WD 642896/642898/642986/642992		Flexible Coupling	533884
	2009.03-2018.12		Front;Rear	Chassis Cabin 4WD 642896/642898/642992		Flexible Coupling	533884
	2009.03-2018.12		Front;Rear	Bus 4WD 642896/642898/642986/642992		Flexible Coupling	533884
	2009.03-2018.12		Front;Rear	Bus RWD 642896/642898/642986/642992		Flexible Coupling	533884
	2009.03-2018.12		Front;Rear	Bus 4WD 642896/642898/642986/642992	Inner diameter:50mm	Flexible Coupling Kit	512673S
	2009.03-2018.12		Front;Rear	Bus RWD 642896/642898/642986/642992	Inner diameter:50mm	Flexible Coupling Kit	512673S
	2009.03-2018.12		Front;Rear	Van RWD 642896/642898/642986/642992		Flexible Coupling Kit	537832S
	2009.03-2018.12		Front;Rear	Chassis Cabin RWD 642896/642898/642992		Flexible Coupling Kit	537832S

	YEAR	TRANSM.	FITTING POSITION	BODY STYLE & DRIVE TYPE & ENGINE	REMARKS	PRODUCT	GSP Ref.
MERCEDES-BENZ							
Sprinter 319D							
3.0 (140 kw)	2009.03-2018.12		Front;Rear	Van 4WD 642896/642898/642986/642992		Flexible Coupling Kit	537832S
	2009.03-2018.12		Front;Rear	Chassis Cabin 4WD 642896/642898/642992		Flexible Coupling Kit	537832S
	2009.03-2018.12		Front;Rear	Bus 4WD 642896/642898/642986/642992	Inner diameter:69.5mm	Flexible Coupling Kit	537832S
	2009.03-2018.12		Front;Rear	Bus RWD 642896/642898/642986/642992	Inner diameter:69.5mm	Flexible Coupling Kit	537832S
	2018.02-		Centre	Van RWD 642899		Center Bearing Support	538627
	2018.02-		Centre	Chassis Cabin RWD 642899		Center Bearing Support	538627
	2018.02-		Centre	Bus RWD 642899		Center Bearing Support	538627
	2018.02-		Centre	Bus RWD 642899		Center Bearing Support Kit	538693S
	2018.02-		Centre	Van RWD 642899		Center Bearing Support Kit	539925S
	2018.02-		Centre	Chassis Cabin RWD 642899		Center Bearing Support Kit	539925S
	2018.02-		Front;Rear	Van RWD 642899		Flexible Coupling	533884
	2018.02-		Front;Rear	Chassis Cabin RWD 642899		Flexible Coupling	533884
	2018.02-		Front;Rear	Bus RWD 642899		Flexible Coupling	533884
	2019.01-2021.12		Centre	Van 4WD 642899		Center Bearing Support	538627
	2019.01-2021.12		Centre	Chassis Cabin 4WD 642899		Center Bearing Support	538627
	2019.01-2021.12		Centre	Bus 4WD 642899		Center Bearing Support	538627
	2019.01-2021.12		Centre	Van 4WD 642899		Center Bearing Support Kit	538693S
	2019.01-2021.12		Centre	Chassis Cabin 4WD 642899		Center Bearing Support Kit	538693S
	2019.01-2021.12		Centre	Bus 4WD 642899		Center Bearing Support Kit	538693S
Sprinter 324							
3.5 (190 kw)	2006.06-2016.12	6MT	Front	Bus RWD 272979	Date from:2011.02,Chassis no. from:S 567427,Trans. code:NSG 400	Propshaft	PS901674
	2006.06-2016.12	6MT	Front	Van RWD 272979	Date from:2011.02,Chassis no. from:S 567427,Trans. code:NSG 400	Propshaft	PS901674
	2006.06-2016.12	6MT	Rear	Bus RWD 272979	Trans. code:NSG 370	Propshaft	PS900368
	2006.06-2016.12	6MT	Rear	Van RWD 272979	Trans. code:NSG 370;for OE No.:A9064100106	Propshaft	PS900368
	2006.06-2016.12	6MT	Rear	Bus RWD 272979	Trans. code:ZF 6S-450	Propshaft	PS900558
	2006.06-2016.12	6MT	Rear	Van RWD 272979	Trans. code:ZF 6S-450	Propshaft	PS900558
	2006.06-2016.12	6MT	Rear	Van RWD 272979	Date to:2011.07,Chassis no. to:S 567426/E 056829,Engine Code:OM 651 DE22 LA,Trans. code:TSG 340	Propshaft	PS901365
	2006.06-2016.12	6MT	Rear	Van RWD 272979	Date from:2011.02,Chassis no. from:S 567427/E 056829,Trans. code:NSG 370;for OE No.:A9064100066	Propshaft	PS901367
	2006.06-2016.12	AT	Rear	Van RWD 272979	Date from:2011.02,Chassis no. from:S 567427,E 056829	Propshaft	PS901362
	2006.06-2016.12	AT	Rear	Bus RWD 272979	For Modelcode:906.735	Propshaft	PS901591
	2006.06-2016.12		Centre	Bus RWD 272979		Center Bearing Support	538627
	2006.06-2016.12		Centre	Chassis Cabin RWD 272979		Center Bearing Support	538627
	2006.06-2016.12		Centre	Van RWD 272979		Center Bearing Support	538627
	2006.06-2016.12		Centre	Bus RWD 272979		Center Bearing Support	538635
	2006.06-2016.12		Centre	Chassis Cabin RWD 272979		Center Bearing Support	538635
	2006.06-2016.12		Centre	Van RWD 272979		Center Bearing Support	538635
	2006.06-2016.12		Centre	Bus RWD 272979		Center Bearing Support Kit	538680S
	2006.06-2016.12		Centre	Chassis Cabin RWD 272979		Center Bearing Support Kit	538680S
	2006.06-2016.12		Centre	Van RWD 272979		Center Bearing Support Kit	538680S
	2006.06-2016.12		Centre	Bus RWD 272979		Center Bearing Support Kit	538693S
	2006.06-2016.12		Centre	Chassis Cabin RWD 272979		Center Bearing Support Kit	538693S
	2006.06-2016.12		Centre	Van RWD 272979		Center Bearing Support Kit	538693S
	2006.06-2016.12		Front;Rear	Bus RWD 272979		Flexible Coupling	533884
	2006.06-2016.12		Front;Rear	Chassis Cabin RWD 272979		Flexible Coupling	533884
	2006.06-2016.12		Front;Rear	Van RWD 272979		Flexible Coupling	533884
	2006.06-2016.12		Front;Rear	Bus RWD 272979		Flexible Coupling Kit	537832S
	2006.06-2016.12		Front;Rear	Chassis Cabin RWD 272979		Flexible Coupling Kit	537832S
	2006.06-2016.12		Front;Rear	Van RWD 272979		Flexible Coupling Kit	537832S
Sprinter 408D							
2.1 (60 kw)	2000.04-2006.05	AT	Rear	Platform/Chassis RWD OM 611.987	For Modelcode:904612,904622,Wheelbase:3550mm	Propshaft	PS900372
	2000.04-2006.05	AT	Rear	Van RWD OM 611.987	For Modelcode:904662,Wheelbase:3550mm;for OE No.:A9014104806	Propshaft	PS900372
	2000.04-2006.05	AT	Rear	Van RWD OM 611.987	for OE No.:9014103301	Propshaft	PS900549
	2000.04-2006.05		Centre	Platform/Chassis RWD OM 611.987		Center Bearing Support	539009
	2000.04-2006.05		Centre	Van RWD OM 611.987		Center Bearing Support	539009
	2000.04-2006.05		Centre	Bus RWD OM 611.987		Center Bearing Support	539009
	2000.04-2006.05		Centre	Platform/Chassis RWD OM 611.987		Center Bearing Support Kit	538995S
	2000.04-2006.05		Centre	Van RWD OM 611.987		Center Bearing Support Kit	538995S
	2000.04-2006.05		Centre	Bus RWD OM 611.987		Center Bearing Support Kit	538995S
2.3 (58 kw)	1996.02-2006.05		Centre	Van RWD OM 601.943		Center Bearing Support	539009
	1996.02-2006.05		Centre	Platform/Chassis RWD OM 601.943		Center Bearing Support	539009
	1996.02-2006.05		Centre	Van RWD OM 601.943		Center Bearing Support Kit	538995S
	1996.02-2006.05		Centre	Platform/Chassis RWD OM 601.943		Center Bearing Support Kit	538995S

	YEAR	TRANSM.	FITTING POSITION	BODY STYLE & DRIVE TYPE & ENGINE	REMARKS	PRODUCT	GSP Ref.
MERCEDES-BENZ							
Sprinter 410D							
2.9 (75 kw)	1996.02-2006.05		Centre	Van RWD OM 602.980		Center Bearing Support	539009
	1996.02-2006.05		Centre	Platform/Chassis RWD OM 602.980		Center Bearing Support	539009
	1996.02-2006.05		Centre	Van RWD OM 602.980		Center Bearing Support Kit	538995S
	1996.02-2006.05		Centre	Platform/Chassis RWD OM 602.980		Center Bearing Support Kit	538995S
	1997.05-2006.05		Centre	Platform/Chassis 4WD OM 602.980		Center Bearing Support	539009
	1997.05-2006.05		Centre	Van 4WD OM 602.980		Center Bearing Support	539009
	1997.05-2006.05		Centre	Platform/Chassis 4WD OM 602.980		Center Bearing Support Kit	538995S
	1997.05-2006.05		Centre	Van 4WD OM 602.980		Center Bearing Support Kit	538995S
Sprinter 411D							
2.0 (84 kw)	2021.10-		Centre	Chassis Cabin RWD 654920		Center Bearing Support	538627
	2021.10-		Centre	Van RWD 654920		Center Bearing Support	538627
	2021.10-		Centre	Chassis Cabin RWD 654920		Center Bearing Support Kit	538693S
	2021.10-		Centre	Van RWD 654920		Center Bearing Support Kit	538693S
2.1 (80 kw)	2000.04-2006.05	AT	Rear	Van RWD OM 611.981	For Modelcode:904662,Wheelbase:3550mm	Propshaft	PS900372
	2000.04-2006.05	AT	Rear	Platform/Chassis RWD OM 611.981	For Modelcode:904612,904622,Wheelbase:3550mm	Propshaft	PS900372
	2000.04-2006.05	AT	Rear	Bus RWD OM 611.981	For Modelcode:904662,Wheelbase:3550mm	Propshaft	PS900372
	2000.04-2006.05		Centre	Van 4WD OM 611.981		Center Bearing Support	539009
	2000.04-2006.05		Centre	Van RWD OM 611.981		Center Bearing Support	539009
	2000.04-2006.05		Centre	Platform/Chassis 4WD OM 611.981		Center Bearing Support	539009
	2000.04-2006.05		Centre	Platform/Chassis RWD OM 611.981		Center Bearing Support	539009
	2000.04-2006.05		Centre	Bus RWD OM 611.981		Center Bearing Support	539009
	2000.04-2006.05		Centre	Van 4WD OM 611.981		Center Bearing Support Kit	538995S
	2000.04-2006.05		Centre	Van RWD OM 611.981		Center Bearing Support Kit	538995S
	2000.04-2006.05		Centre	Platform/Chassis 4WD OM 611.981		Center Bearing Support Kit	538995S
	2000.04-2006.05		Centre	Platform/Chassis RWD OM 611.981		Center Bearing Support Kit	538995S
	2000.04-2006.05		Centre	Bus RWD OM 611.981		Center Bearing Support Kit	538995S
2.2 (80 kw)	2010.01-2018.12	MT	Front	Chassis Cabin RWD 646985	Chassis no. to:N478535/E057183	Propshaft	PS900365
	2010.01-2018.12	MT	Front	Van RWD 646985	Chassis no. to:N478535/E057183	Propshaft	PS900365
	2010.01-2018.12	6MT	Rear	Chassis Cabin RWD 646985	Date from:2010.01,Trans. code:TSG 360	Propshaft	PS900550
	2010.01-2018.12	6MT	Rear	Van RWD 646985	Date from:2010.01,Trans. code:TSG 360	Propshaft	PS900550
	2010.01-2018.12	AT/6MT	Rear	Chassis Cabin RWD 646985	Date from:2010.01,Trans. code:NSG 370/NSG 400	Propshaft	PS901368
	2010.01-2018.12	AT/6MT	Rear	Van RWD 646985	Date from:2010.01,Trans. code:NSG 370/NSG 400	Propshaft	PS901368
	2010.01-2018.12		Centre	Chassis Cabin RWD 646985		Center Bearing Support	538627
	2010.01-2018.12		Centre	Van RWD 646985		Center Bearing Support	538627
	2010.01-2018.12		Centre	Chassis Cabin RWD 646985		Center Bearing Support	538635
	2010.01-2018.12		Centre	Van RWD 646985		Center Bearing Support	538635
	2010.01-2018.12		Front	Chassis Cabin RWD 646985		Center Bearing Support Kit	538681S
	2010.01-2018.12		Front	Van RWD 646985		Center Bearing Support Kit	538681S
	2010.01-2018.12		Centre	Chassis Cabin RWD 646985		Center Bearing Support Kit	538693S
	2010.01-2018.12		Centre	Van RWD 646985		Center Bearing Support Kit	538693S
	2010.01-2018.12		Front;Rear	Chassis Cabin RWD 646985		Flexible Coupling	533884
	2010.01-2018.12		Front;Rear	Van RWD 646985		Flexible Coupling	533884
	2010.01-2018.12		Front;Rear	Chassis Cabin RWD 646985		Flexible Coupling Kit	537832S
	2010.01-2018.12		Front;Rear	Van RWD 646985		Flexible Coupling Kit	537832S
2.2 (84 kw)	2016.04-2018.12	AT	Rear	Chassis Cabin RWD 651955/651956	Model code:906253,Wheel base:3665 mm	Propshaft	PS901965
	2016.04-2018.12	AT	Rear	Van RWD 651955/651956	Model code:906653	Propshaft	PS901965
	2016.04-2018.12		Centre	Chassis Cabin RWD 651955/651956		Center Bearing Support	538627
	2016.04-2018.12		Centre	Van RWD 651955/651956		Center Bearing Support	538627
	2016.04-2018.12		Centre	Chassis Cabin RWD 651955/651956		Center Bearing Support	538635
	2016.04-2018.12		Front	Chassis Cabin RWD 651955/651956		Center Bearing Support Kit	538681S
	2016.04-2018.12		Centre	Chassis Cabin RWD 651955/651956		Center Bearing Support Kit	538693S
	2016.04-2018.12		Centre	Van RWD 651955/651956		Center Bearing Support Kit	538693S
	2016.04-2018.12		Front;Rear	Chassis Cabin RWD 651955/651956		Flexible Coupling	533884
	2016.04-2018.12		Front;Rear	Van RWD 651955/651956		Flexible Coupling	533884
	2016.04-2018.12		Front;Rear	Chassis Cabin RWD 651955/651956		Flexible Coupling Kit	537832S
	2016.04-2018.12		Front;Rear	Van RWD 651955/651956		Flexible Coupling Kit	537832S
	2018.02-		Centre	Chassis Cabin RWD 651958		Center Bearing Support	538627
	2018.02-		Centre	Van RWD 651958		Center Bearing Support	538627
	2018.02-		Centre	Bus RWD 651958		Center Bearing Support	538627
	2018.02-		Centre	Bus RWD 651958		Center Bearing Support Kit	538693S
	2018.02-		Centre	Chassis Cabin RWD 651958		Center Bearing Support Kit	539925S
	2018.02-		Centre	Van RWD 651958		Center Bearing Support Kit	539925S
	2018.02-		Front;Rear	Chassis Cabin RWD 651958		Flexible Coupling	533884
	2018.02-		Front;Rear	Van RWD 651958		Flexible Coupling	533884

	YEAR	TRANSM.	FITTING POSITION	BODY STYLE & DRIVE TYPE & ENGINE	REMARKS	PRODUCT	GSP Ref.
MERCEDES-BENZ							
Sprinter 412D							
2.9 (85 kw)	1996.02-2006.05		Centre	Van RWD OM 602.980		Center Bearing Support	539009
	1996.02-2006.05		Centre	Platform/Chassis RWD OM 602.980		Center Bearing Support	539009
	1996.02-2006.05		Centre	Van RWD OM 602.980		Center Bearing Support Kit	538995S
	1996.02-2006.05		Centre	Platform/Chassis RWD OM 602.980		Center Bearing Support Kit	538995S
	1997.05-2006.05		Centre	Platform/Chassis 4WD OM 602.980		Center Bearing Support	539009
	1997.05-2006.05		Centre	Van 4WD OM 602.980		Center Bearing Support	539009
	1997.05-2006.05		Centre	Platform/Chassis 4WD OM 602.980		Center Bearing Support Kit	538995S
	1997.05-2006.05		Centre	Van 4WD OM 602.980		Center Bearing Support Kit	538995S
2.9 (90 kw)	1996.02-2006.05		Centre	Platform/Chassis RWD OM 602.980 (02.96-.)		Center Bearing Support	539009
	1996.02-2006.05		Centre	Van RWD OM 602.980 (02.96-.)		Center Bearing Support	539009
	1996.02-2006.05		Centre	Platform/Chassis RWD OM 602.980 (02.96-.)		Center Bearing Support Kit	538995S
	1996.02-2006.05		Centre	Van RWD OM 602.980 (02.96-.)		Center Bearing Support Kit	538995S
	1997.05-2006.05	5MT	Front	Van 4WD OM 602.980 (05.97-.)		Propshaft	PS900366
	1997.05-2006.05		Centre	Platform/Chassis 4WD OM 602.980 (05.97-.)		Center Bearing Support	539009
	1997.05-2006.05		Centre	Van 4WD OM 602.980 (05.97-.)		Center Bearing Support	539009
	1997.05-2006.05		Centre	Platform/Chassis 4WD OM 602.980 (05.97-.)		Center Bearing Support Kit	538995S
	1997.05-2006.05		Centre	Van 4WD OM 602.980 (05.97-.)		Center Bearing Support Kit	538995S
Sprinter 413D							
2.1 (95 kw)	2000.04-2006.05	AT	Rear	Van RWD OM 611.981	For Modelcode:904662,Wheelbase:3550mm;for OE No.:A9014104806	Propshaft	PS900372
	2000.04-2006.05	AT	Rear	Platform/Chassis RWD OM 611.981	For Modelcode:904612,904622,Wheelbase:3550mm	Propshaft	PS900372
	2000.04-2006.05	AT	Rear	Van RWD OM 611.981	for OE No.:9014103301	Propshaft	PS900549
	2000.04-2006.05		Centre	Van 4WD OM 611.981		Center Bearing Support	539009
	2000.04-2006.05		Centre	Van RWD OM 611.981		Center Bearing Support	539009
	2000.04-2006.05		Centre	Platform/Chassis 4WD OM 611.981		Center Bearing Support	539009
	2000.04-2006.05		Centre	Platform/Chassis RWD OM 611.981		Center Bearing Support	539009
	2000.04-2006.05		Centre	Bus RWD OM 611.981		Center Bearing Support	539009
	2000.04-2006.05		Centre	Van 4WD OM 611.981		Center Bearing Support Kit	538995S
	2000.04-2006.05		Centre	Van RWD OM 611.981		Center Bearing Support Kit	538995S
	2000.04-2006.05		Centre	Platform/Chassis 4WD OM 611.981		Center Bearing Support Kit	538995S
	2000.04-2006.05		Centre	Platform/Chassis RWD OM 611.981		Center Bearing Support Kit	538995S
	2000.04-2006.05		Centre	Bus RWD OM 611.981		Center Bearing Support Kit	538995S
2.2 (95 kw)	2006.06-2016.12	6MT	Front	Van RWD 651955/651956/651957	Trans. code:TSG 360,Date from:2009.03	Propshaft	PS900549
	2006.06-2016.12	6MT	Front	Van RWD 651955/651956/651957	Date from:2011.02,Chassis no. from:S 567427,Trans. code:NSG 400	Propshaft	PS901674
	2006.06-2016.12	AT	Front	Van RWD 651955/651956/651957	For Modelcode:906.635,906.637,Chassis no. from:S1674275587429515662 For Modelcode:906.635,906.637,Wheelbase:3250 mm	Propshaft	PS901464
	2006.06-2016.12	6MT	Rear	Chassis Cabin RWD 651955/651956/651957	Trans. code:NSG 370	Propshaft	PS900368
	2006.06-2016.12	6MT	Rear	Van RWD 651955/651956/651957	Trans. code:NSG 370,Date from:2009.03	Propshaft	PS900368
	2006.06-2016.12	6MT	Rear	Chassis Cabin RWD 651955/651956/651957		Propshaft	PS900550
	2006.06-2016.12	6MT	Rear	Van RWD 651955/651956/651957	Trans. code:TSG 360,Date from:2009.03	Propshaft	PS900550
	2006.06-2016.12	6MT	Rear	Chassis Cabin RWD 651955/651956/651957	Trans. code:ZF 6S-450	Propshaft	PS900558
	2006.06-2016.12	6MT	Rear	Van RWD 651955/651956/651957	Trans. code:ZF 6S-450,Date from:2009.03	Propshaft	PS900558
	2006.06-2016.12	6MT	Rear	Chassis Cabin RWD 651955/651956/651957	Date to:2011.02,Chassis no.from:N 418325,Chassis no.to:N 418535,Transm.Type:TSG 360	Propshaft	PS901684
	2006.06-2016.12	AT	Rear	Van RWD 651955/651956/651957	Date from:2009.03,Wheelbase:4325 mm;for OE No.:A9064100016	Propshaft	PS900367
	2006.06-2016.12	AT	Rear	Chassis Cabin RWD 651955/651956/651957	Wheel base:4325 mm,Date from:2011.02	Propshaft	PS900559
	2006.06-2016.12	AT	Rear	Van RWD 651955/651956/651957	Date from:2011.04,Chassis no. from:56829,Wheelbase:4325 mm;for OE No.:A9064107816	Propshaft	PS900559
	2006.06-2016.12	AT	Rear	Chassis Cabin RWD 651955/651956/651957	Model code:906253,Wheel base:3665 mm	Propshaft	PS901965
	2006.06-2016.12		Centre	Chassis Cabin RWD 651955/651956/651957		Center Bearing Support	538627
	2006.06-2016.12		Centre	Van RWD 651955/651956/651957		Center Bearing Support	538627
	2006.06-2016.12		Centre	Chassis Cabin RWD 651955/651956/651957		Center Bearing Support	538635
	2006.06-2016.12		Centre	Van RWD 651955/651956/651957		Center Bearing Support	538635
	2006.06-2016.12		Front	Chassis Cabin RWD 651955/651956/651957		Center Bearing Support Kit	538681S
	2006.06-2016.12		Front	Van RWD 651955/651956/651957		Center Bearing Support Kit	538681S
	2006.06-2016.12		Centre	Van RWD 651955/651956/651957		Center Bearing Support Kit	538680S
	2006.06-2016.12		Centre	Chassis Cabin RWD 651955/651956/651957		Center Bearing Support Kit	538693S
	2006.06-2016.12		Centre	Van RWD 651955/651956/651957		Center Bearing Support Kit	538693S
	2006.06-2016.12		Front;Rear	Chassis Cabin RWD 651955/651956/651957	Engine Code:OM 651.956	Flexible Coupling	533884
	2006.06-2016.12		Front;Rear	Van RWD 651955/651956/651957	Engine Code:OM 651.956	Flexible Coupling	533884
	2006.06-2016.12		Front;Rear	Chassis Cabin RWD 651955/651956/651957		Flexible Coupling Kit	537832S
	2006.06-2016.12		Front;Rear	Van RWD 651955/651956/651957		Flexible Coupling Kit	537832S
Sprinter 414							
2.3 (105 kw)	1995.02-2006.05		Centre	Platform/Chassis RWD M 111.979, M 111.984		Center Bearing Support	539009
	1995.02-2006.05		Centre	Platform/Chassis RWD M 111.979, M 111.984		Center Bearing Support Kit	538995S
	1996.02-2006.05	5AT/6AT/5MT	Front	Van RWD M 111.979, M 111.984		Propshaft	PS900366
	1996.02-2006.05		Centre	Van RWD M 111.979, M 111.984		Center Bearing Support	539009
	1996.02-2006.05		Centre	Bus RWD M 111.979, M 111.984		Center Bearing Support	539009

	YEAR	TRANSM.	FITTING POSITION	BODY STYLE & DRIVE TYPE & ENGINE	REMARKS	PRODUCT	GSP Ref.
MERCEDES-BENZ							
Sprinter 414							
2.3 (105 kw)	1996.02-2006.05		Centre	Van RWD M 111.979, M 111.984		Center Bearing Support Kit	538995S
	1996.02-2006.05		Centre	Bus RWD M 111.979, M 111.984		Center Bearing Support Kit	538995S
	1997.05-2006.05	6AT/5MT	Front	Van 4WD M 111.979, M 111.984		Propshaft	PS900366
	1997.05-2006.05		Centre	Platform/Chassis 4WD M 111.979, M 111.984		Center Bearing Support	539009
	1997.05-2006.05		Centre	Van 4WD M 111.979, M 111.984		Center Bearing Support	539009
	1997.05-2006.05		Centre	Platform/Chassis 4WD M 111.979, M 111.984		Center Bearing Support Kit	538995S
	1997.05-2006.05		Centre	Van 4WD M 111.979, M 111.984		Center Bearing Support Kit	538995S
Sprinter 414D							
2.2 (105 kw)	2016.04-2018.12	6MT	Rear	Van 4WD 651955/651956	For Modelcode:906655,Wheelbase:4325 mm	Propshaft	PS901855
	2016.04-2018.12	AT	Rear	Chassis Cabin RWD 651955/651956	Model code:906253,Wheel base:3665 mm	Propshaft	PS901965
	2016.04-2018.12	AT	-	Van 4WD 651955/651956	For Modelcode:906653,Wheelbase:3665 mm,with STEUERCODE HINTERACHSE TELLERRAD 215,Trans. type:7G-TRONIC PLUS	Propshaft	PS901685
	2016.04-2018.12	AT	-	Van 4WD 651955/651956	For Modelcode:906653,Wheelbase:3665 mm,without STEUERCODE HINTERACHSE TELLERRAD 215,Trans. type:7G-TRONIC PLUS	Propshaft	PS901708
	2016.04-2018.12		Centre	Van 4WD 651955/651956		Center Bearing Support	538627
	2016.04-2018.12		Centre	Chassis Cabin RWD 651955/651956		Center Bearing Support	538627
	2016.04-2018.12		Centre	Van 4WD 651955/651956		Center Bearing Support	538635
	2016.04-2018.12		Centre	Chassis Cabin RWD 651955/651956		Center Bearing Support	538635
	2016.04-2018.12		Front	Van 4WD 651955/651956		Center Bearing Support Kit	538681S
	2016.04-2018.12		Front	Chassis Cabin RWD 651955/651956		Center Bearing Support Kit	538681S
	2016.04-2018.12		Centre	Van 4WD 651955/651956		Center Bearing Support Kit	538693S
	2016.04-2018.12		Centre	Chassis Cabin RWD 651955/651956		Center Bearing Support Kit	538693S
	2016.04-2018.12		Front;Rear	Van 4WD 651955/651956		Flexible Coupling	533884
	2016.04-2018.12		Front;Rear	Chassis Cabin RWD 651955/651956		Flexible Coupling	533884
	2016.04-2018.12		Front;Rear	Van 4WD 651955/651956		Flexible Coupling Kit	537832S
	2016.04-2018.12		Front;Rear	Chassis Cabin RWD 651955/651956		Flexible Coupling Kit	537832S
	2016.05-2018.12	6MT	Rear	Van RWD 651955/651956	Trans. code:NSG 370	Propshaft	PS900368
	2016.05-2018.12	6MT	Rear	Van RWD 651955/651956	Trans. code:ZF 6S-450	Propshaft	PS900558
	2016.05-2018.12	AT	Rear	Van RWD 651955/651956	Model code:906653	Propshaft	PS901965
	2016.05-2018.12		Centre	Van RWD 651955/651956		Center Bearing Support	538627
	2016.05-2018.12		Centre	Van RWD 651955/651956		Center Bearing Support	538635
	2016.05-2018.12		Front	Van RWD 651955/651956		Center Bearing Support Kit	538681S
	2016.05-2018.12		Centre	Van RWD 651955/651956		Center Bearing Support Kit	538693S
	2016.05-2018.12		Front;Rear	Van RWD 651955/651956		Flexible Coupling	533884
	2016.05-2018.12		Front;Rear	Van RWD 651955/651956		Flexible Coupling Kit	537832S
	2018.02-		Centre	Chassis Cabin RWD 651958		Center Bearing Support	538627
	2018.02-		Centre	Van RWD 651958		Center Bearing Support	538627
	2018.02-		Centre	Chassis Cabin RWD 651958		Center Bearing Support Kit	539925S
	2018.02-		Centre	Van RWD 651958		Center Bearing Support Kit	539925S
	2018.02-		Front;Rear	Chassis Cabin RWD 651958		Flexible Coupling	533884
	2018.02-		Front;Rear	Van RWD 651958		Flexible Coupling	533884
	2019.01-2021.12		Centre	Van 4WD 651958		Center Bearing Support	538627
	2019.01-2021.12		Centre	Chassis Cabin 4WD 651958		Center Bearing Support	538627
	2019.01-2021.12		Centre	Van 4WD 651958		Center Bearing Support Kit	538693S
	2019.01-2021.12		Centre	Chassis Cabin 4WD 651958		Center Bearing Support Kit	538693S
	2019.09-		Centre	Bus RWD 651958		Center Bearing Support	538627
	2019.09-		Centre	Bus RWD 651958		Center Bearing Support Kit	538693S
2.9 (90 kw)	1997.05-2006.05	5MT	Front	Van 4WD OM 602.980		Propshaft	PS900366
	1997.05-2006.05		Centre	Van 4WD OM 602.980	AWD	Center Bearing Support	539009
	1997.05-2006.05		Centre	Van 4WD OM 602.980		Center Bearing Support Kit	538995S
Sprinter 415D							
2.0 (110 kw)	2021.10-		Centre	Chassis Cabin RWD 654920		Center Bearing Support	538627
	2021.10-		Centre	Van RWD 654920		Center Bearing Support	538627
	2021.10-		Centre	Chassis Cabin RWD 654920		Center Bearing Support Kit	538693S
	2021.10-		Centre	Van RWD 654920		Center Bearing Support Kit	538693S
2.2 (110 kw)	2006.06-2009.12	MT	Front	Chassis Cabin RWD 646986/646989/646990	Chassis no. to:N478535/E057183	Propshaft	PS900365
	2006.06-2009.12	6MT	Rear	Chassis Cabin RWD 646986/646989/646990	Trans. code:NSG 370	Propshaft	PS900368
	2006.06-2009.12	6MT	Rear	Chassis Cabin RWD 646986/646989/646990	Trans. code:TSG 360	Propshaft	PS900550
	2006.06-2009.12	6MT	Rear	Chassis Cabin RWD 646986/646989/646990	Trans. code:ZF 6S-450	Propshaft	PS900558
	2006.06-2009.12	AT	Rear	Chassis Cabin RWD 646986/646989/646990		Propshaft	PS900367
	2006.06-2009.12		Centre	Chassis Cabin RWD 646986/646989/646990		Center Bearing Support	538627
	2006.06-2009.12		Centre	Van RWD 646986/646989/646990		Center Bearing Support	538627
	2006.06-2009.12		Centre	Chassis Cabin RWD 646986/646989/646990		Center Bearing Support	538635
	2006.06-2009.12		Centre	Van RWD 646986/646989/646990		Center Bearing Support	538635
	2006.06-2009.12		Front	Chassis Cabin RWD 646986/646989/646990		Center Bearing Support Kit	538681S
	2006.06-2009.12		Front	Van RWD 646986/646989/646990		Center Bearing Support Kit	538681S

	YEAR	TRANSM.	FITTING POSITION	BODY STYLE & DRIVE TYPE & ENGINE	REMARKS	PRODUCT	GSP Ref.
MERCEDES-BENZ							
Sprinter 415D							
2.2 (110 kw)	2006.06-2009.12		Centre	Chassis Cabin RWD 646986/646989/646990		Center Bearing Support Kit	538680S
	2006.06-2009.12		Centre	Chassis Cabin RWD 646986/646989/646990		Center Bearing Support Kit	538693S
	2006.06-2009.12		Centre	Van RWD 646986/646989/646990		Center Bearing Support Kit	538693S
	2006.06-2009.12		Front;Rear	Chassis Cabin RWD 646986/646989/646990		Flexible Coupling	533884
	2006.06-2009.12		Front;Rear	Van RWD 646986/646989/646990		Flexible Coupling	533884
	2006.06-2009.12		Front;Rear	Chassis Cabin RWD 646986/646989/646990		Flexible Coupling Kit	537832S
	2006.06-2009.12		Front;Rear	Van RWD 646986/646989/646990		Flexible Coupling Kit	537832S
Sprinter 416D							
2.2 (120 kw)	2009.03-2018.12	6MT	Front	Van RWD 651955/651956/651957	Date from:2011.02,Chassis no. from:S 567427,Trans. code:NSG 400	Propshaft	PS901674
	2009.03-2018.12	AT	Front	Chassis Cabin RWD 651955/651956/651957	Chassis no.:B567180,Date to:2011.07,Chassis no.:W567903,Date to:2011.02,Chassis no.:from:W567906,Date from:2011.02,Wheelbase:3250 mm	Propshaft	PS901464
	2009.03-2018.12	AT	Front	Van RWD 651955/651956/651957	Wheelbase:4325 mm	Propshaft	PS901464
	2009.03-2018.12	6MT	Rear	Chassis Cabin RWD 651955/651956/651957	Trans. code:NSG 370	Propshaft	PS900368
	2009.03-2018.12	6MT	Rear	Chassis Cabin RWD 651955/651956/651957	Trans. code:TSG 360;without Flexible Coupling	Propshaft	PS900550
	2009.03-2018.12	6MT	Rear	Van RWD 651955/651956/651957	Trans. code:TSG 360;for OE NO.:A9064105806	Propshaft	PS900550
	2009.03-2018.12	6MT	Rear	Chassis Cabin RWD 651955/651956/651957	Trans. code:ZF 6S-450	Propshaft	PS900558
	2009.03-2018.12	6MT	Rear	Van RWD 651955/651956/651957	Trans. code:ZF 6S-450	Propshaft	PS900558
	2009.03-2018.12	6MT	Rear	Chassis Cabin RWD 651955/651956/651957	Date to:2011.02,Chassis no.from:N 418325,Chassis no.to:N 418535,Transm.Type:TSG 360	Propshaft	PS901684
	2009.03-2018.12	AT	Rear	Chassis Cabin RWD 651955/651956/651957	Wheel base:4325 mm	Propshaft	PS900559
	2009.03-2018.12	AT	Rear	Van RWD 651955/651956/651957	Model code:906635/906637/906655/906657,Wheel base:4325 mm	Propshaft	PS900559
	2009.03-2018.12	AT	Rear	Chassis Cabin RWD 651955/651956/651957	Model code:906253,Wheel base:3665 mm	Propshaft	PS901965
	2009.03-2018.12	AT	Rear	Van RWD 651955/651956/651957	Model code:906653,Wheel base:3665 mm	Propshaft	PS901965
	2009.03-2018.12		Centre	Chassis Cabin RWD 651955/651956/651957		Center Bearing Support	538627
	2009.03-2018.12		Centre	Van RWD 651955/651956/651957		Center Bearing Support	538627
	2009.03-2018.12		Centre	Chassis Cabin RWD 651955/651956/651957		Center Bearing Support	538635
	2009.03-2018.12		Centre	Van RWD 651955/651956/651957		Center Bearing Support	538635
	2009.03-2018.12		Front	Chassis Cabin RWD 651955/651956/651957		Center Bearing Support Kit	538681S
	2009.03-2018.12		Front	Van RWD 651955/651956/651957		Center Bearing Support Kit	538681S
	2009.03-2018.12		Centre	Chassis Cabin RWD 651955/651956/651957		Center Bearing Support Kit	538680S
	2009.03-2018.12		Centre	Van RWD 651955/651956/651957		Center Bearing Support Kit	538680S
	2009.03-2018.12		Centre	Chassis Cabin RWD 651955/651956/651957		Center Bearing Support Kit	538693S
	2009.03-2018.12		Centre	Van RWD 651955/651956/651957		Center Bearing Support Kit	538693S
	2009.03-2018.12		Front;Rear	Chassis Cabin RWD 651955/651956/651957		Flexible Coupling	533884
	2009.03-2018.12		Front;Rear	Van RWD 651955/651956/651957		Flexible Coupling	533884
	2009.03-2018.12		Front;Rear	Chassis Cabin RWD 651955/651956/651957		Flexible Coupling Kit	537832S
	2009.03-2018.12		Front;Rear	Van RWD 651955/651956/651957	Engine Code:OM 651.957	Flexible Coupling Kit	537832S
	2013.11-2018.12	6MT	Rear	Van 4WD 651955/651956/651957	For Modelcode:906655,Wheelbase:4325 mm	Propshaft	PS901855
	2013.11-2018.12		Centre	Van 4WD 651955/651956/651957		Center Bearing Support	538627
	2013.11-2018.12		Centre	Van 4WD 651955/651956/651957		Center Bearing Support	538635
	2013.11-2018.12		Front	Van 4WD 651955/651956/651957		Center Bearing Support Kit	538681S
	2013.11-2018.12		Centre	Van 4WD 651955/651956/651957		Center Bearing Support Kit	538693S
	2013.11-2018.12		Front;Rear	Van 4WD 651955/651956/651957		Flexible Coupling	533884
	2013.11-2018.12		Front;Rear	Van 4WD 651955/651956/651957		Flexible Coupling Kit	537832S
	2018.02-		Centre	Van RWD 651958		Center Bearing Support	538627
	2018.02-		Centre	Chassis Cabin RWD 651958		Center Bearing Support	538627
	2018.02-		Centre	Van RWD 651958		Center Bearing Support Kit	539925S
	2018.02-		Centre	Chassis Cabin RWD 651958		Center Bearing Support Kit	539925S
	2018.02-		Front;Rear	Van RWD 651958		Flexible Coupling	533884
	2018.02-		Front;Rear	Chassis Cabin RWD 651958		Flexible Coupling	533884
	2019.01-2021.12		Centre	Van 4WD 651958		Center Bearing Support	538627
	2019.01-2021.12		Centre	Chassis Cabin 4WD 651958		Center Bearing Support	538627
	2019.01-2021.12		Centre	Van 4WD 651958		Center Bearing Support Kit	538693S
	2019.01-2021.12		Centre	Chassis Cabin 4WD 651958		Center Bearing Support Kit	538693S
2.7 (115 kw)	2000.04-2006.05	MT	Front	Van RWD OM 612.981, OM 647.981	For Engine code:OM 612 DE LA,Trans. code:G 33-5/5;05-0,75	Propshaft	PS901377
	2000.04-2006.05	MT	Front	Platform/Chassis RWD OM 612.981, OM 647.981	For Engine code:OM 612 DE LA,Trans. code:G 33-5/5;05-0,75	Propshaft	PS901377
	2000.04-2006.05	AT	Rear	Van RWD OM 612.981, OM 647.981		Propshaft	PS900549
	2000.04-2006.05		Centre	Van 4WD OM 612.981, OM 647.981		Center Bearing Support	539009
	2000.04-2006.05		Centre	Van RWD OM 612.981, OM 647.981		Center Bearing Support	539009
	2000.04-2006.05		Centre	Platform/Chassis 4WD OM 612.981, OM 647.981		Center Bearing Support	539009
	2000.04-2006.05		Centre	Platform/Chassis RWD OM 612.981, OM 647.981		Center Bearing Support	539009
	2000.04-2006.05		Centre	Bus RWD OM 612.981		Center Bearing Support	539009
	2000.04-2006.05		Centre	Van 4WD OM 612.981, OM 647.981		Center Bearing Support Kit	538995S
	2000.04-2006.05		Centre	Van RWD OM 612.981, OM 647.981		Center Bearing Support Kit	538995S
	2000.04-2006.05		Centre	Platform/Chassis 4WD OM 612.981, OM 647.981		Center Bearing Support Kit	538995S
	2000.04-2006.05		Centre	Platform/Chassis RWD OM 612.981, OM 647.981		Center Bearing Support Kit	538995S

	YEAR	TRANSM.	FITTING POSITION	BODY STYLE & DRIVE TYPE & ENGINE	REMARKS	PRODUCT	GSP Ref.
MERCEDES-BENZ							
Sprinter 416D							
2.7 (115 kw)	2000.04-2006.05		Centre	Bus RWD OM 612.981		Center Bearing Support Kit	538995S
Sprinter 417D							
2.0 (125 kw)	2020.06-		Centre	Van RWD 654920		Center Bearing Support	538627
	2020.06-		Centre	Van RWD 654920		Center Bearing Support Kit	538693S
	2021.10-		Centre	Chassis Cabin RWD 654920		Center Bearing Support	538627
	2021.10-		Centre	Chassis Cabin RWD 654920		Center Bearing Support Kit	538693S
	2022.01-		Centre	Bus RWD OM 654.920		Center Bearing Support	538627
	2022.01-		Centre	Bus RWD OM 654.920		Center Bearing Support Kit	538693S
Sprinter 418D							
3.0 (135 kw)	2006.06-2010.12	6MT	Rear	Chassis Cabin RWD 642896/642986/642992/642993	Trans. code:NSG 370	Propshaft	PS900368
	2006.06-2010.12	6MT	Rear	Chassis Cabin RWD 642896/642986/642992/642993	Trans. code:ZF 6S-450	Propshaft	PS900558
	2006.06-2010.12	AT	Rear	Chassis Cabin RWD 642896/642986/642992/642993		Propshaft	PS900369
	2006.06-2010.12		Centre	Chassis Cabin RWD 642896/642986/642992/642993		Center Bearing Support	538627
	2006.06-2010.12		Centre	Van RWD 642896/642986/642993		Center Bearing Support	538627
	2006.06-2010.12		Centre	Chassis Cabin RWD 642896/642986/642992/642993		Center Bearing Support	538635
	2006.06-2010.12		Centre	Van RWD 642896/642986/642993		Center Bearing Support	538635
	2006.06-2010.12		Centre	Chassis Cabin RWD 642896/642986/642992/642993		Center Bearing Support Kit	538680S
	2006.06-2010.12		Centre	Chassis Cabin RWD 642896/642986/642992/642993		Center Bearing Support Kit	538693S
	2006.06-2010.12		Centre	Van RWD 642896/642986/642993		Center Bearing Support Kit	538693S
	2006.06-2010.12		Front;Rear	Chassis Cabin RWD 642896/642986/642992/642993		Flexible Coupling	533884
	2006.06-2010.12		Front;Rear	Van RWD 642896/642986/642993		Flexible Coupling	533884
	2006.06-2010.12		Front;Rear	Chassis Cabin RWD 642896/642986/642992/642993		Flexible Coupling Kit	537832S
	2006.06-2010.12		Front;Rear	Van RWD 642896/642986/642993		Flexible Coupling Kit	537832S
Sprinter 419D							
2.0 (140 kw)	2021.10-		Centre	Chassis Cabin RWD 654920		Center Bearing Support	538627
	2021.10-		Centre	Van RWD 654920		Center Bearing Support	538627
	2021.10-		Centre	Chassis Cabin 4WD 654920		Center Bearing Support	538627
	2021.10-		Centre	Van 4WD 654920		Center Bearing Support	538627
	2021.10-		Centre	Chassis Cabin RWD 654920		Center Bearing Support Kit	538693S
	2021.10-		Centre	Van RWD 654920		Center Bearing Support Kit	538693S
	2021.10-		Centre	Chassis Cabin 4WD 654920		Center Bearing Support Kit	538693S
	2021.10-		Centre	Van 4WD 654920		Center Bearing Support Kit	538693S
3.0 (140 kw)	2009.03-2018.12	6MT	Front	Van RWD 642896/642992	Date from:2011.02,Chassis no. from:S 567427,Trans. code:NSG 400	Propshaft	PS901674
	2009.03-2018.12	AT	Front	Van RWD 642896/642992	Wheelbase:4325 mm	Propshaft	PS901444
	2009.03-2018.12	AT	Front	Chassis Cabin RWD 642896/642898/642986/642992	Wheelbase:4325 mm	Propshaft	PS901444
	2009.03-2018.12	6MT	Rear	Van RWD 642896/642992	Trans. code:NSG 370	Propshaft	PS900368
	2009.03-2018.12	6MT	Rear	Chassis Cabin RWD 642896/642898/642986/642992	Trans. code:NSG 370	Propshaft	PS900368
	2009.03-2018.12	6MT	Rear	Van RWD 642896/642992	Trans. code:ZF 6S-450	Propshaft	PS900558
	2009.03-2018.12	6MT	Rear	Chassis Cabin RWD 642896/642898/642986/642992	Trans. code:ZF 6S-450	Propshaft	PS900558
	2009.03-2018.12	AT	Rear	Van RWD 642896/642992	Wheelbase:3665 mm	Propshaft	PS900369
	2009.03-2018.12	AT	Rear	Chassis Cabin RWD 642896/642898/642986/642992	Wheelbase:3665 mm	Propshaft	PS900369
	2009.03-2018.12	AT	Rear	Van RWD 642896/642992	Wheelbase:4325 mm,two parts	Propshaft	PS901369
	2009.03-2018.12	AT	Rear	Chassis Cabin RWD 642896/642898/642986/642992	Wheelbase:4325 mm,two parts	Propshaft	PS901369
	2009.03-2018.12	AT	Rear	Van RWD 642896/642992	Wheelbase:4325 mm,three parts	Propshaft	PS901445
	2009.03-2018.12	AT	Rear	Chassis Cabin RWD 642896/642898/642986/642992	Wheelbase:4325 mm,three parts	Propshaft	PS901445
	2009.03-2018.12		Centre	Van RWD 642896/642992		Center Bearing Support	538627
	2009.03-2018.12		Centre	Chassis Cabin RWD 642896/642898/642986/642992		Center Bearing Support	538627
	2009.03-2018.12		Centre	Van RWD 642896/642992		Center Bearing Support	538635
	2009.03-2018.12		Centre	Chassis Cabin RWD 642896/642898/642986/642992		Center Bearing Support	538635
	2009.03-2018.12		Centre	Van RWD 642896/642992		Center Bearing Support Kit	538680S
	2009.03-2018.12		Centre	Chassis Cabin RWD 642896/642898/642986/642992		Center Bearing Support Kit	538680S
	2009.03-2018.12		Centre	Van RWD 642896/642992		Center Bearing Support Kit	538693S
	2009.03-2018.12		Centre	Chassis Cabin RWD 642896/642898/642986/642992		Center Bearing Support Kit	538693S
	2009.03-2018.12		Front;Rear	Van RWD 642896/642992		Flexible Coupling	533884
	2009.03-2018.12		Front;Rear	Chassis Cabin RWD 642896/642898/642986/642992		Flexible Coupling	533884
	2009.03-2018.12		Front;Rear	Van RWD 642896/642992		Flexible Coupling Kit	537832S
	2009.03-2018.12		Front;Rear	Chassis Cabin RWD 642896/642898/642986/642992		Flexible Coupling Kit	537832S
	2018.02-		Centre	Chassis Cabin RWD 642899		Center Bearing Support	538627
	2018.02-		Centre	Van RWD 642899		Center Bearing Support	538627
	2018.02-		Centre	Bus RWD 642899		Center Bearing Support	538627
	2018.02-		Centre	Bus RWD 642899		Center Bearing Support Kit	538693S
	2018.02-		Centre	Chassis Cabin RWD 642899		Center Bearing Support Kit	539925S
	2018.02-		Centre	Van RWD 642899		Center Bearing Support Kit	539925S
	2018.02-		Front;Rear	Chassis Cabin RWD 642899		Flexible Coupling	533884

	YEAR	TRANSM.	FITTING POSITION	BODY STYLE & DRIVE TYPE & ENGINE	REMARKS	PRODUCT	GSP Ref.
MERCEDES-BENZ							
Sprinter 419D							
3.0 (140 kw)	2018.02-		Front;Rear	Van RWD 642899		Flexible Coupling	533884
	2019.01-2021.12		Centre	Van 4WD 642899		Center Bearing Support	538627
	2019.01-2021.12		Centre	Chassis Cabin 4WD 642899		Center Bearing Support	538627
	2019.01-2021.12		Centre	Van 4WD 642899		Center Bearing Support Kit	538693S
	2019.01-2021.12		Centre	Chassis Cabin 4WD 642899		Center Bearing Support Kit	538693S
Sprinter 424							
3.5 (190 kw)	2006.06-2016.12	6MT	Front	Van RWD 272979	Date from:2011.02,Chassis no. from:S 567427,Trans. code:NSG 400	Propshaft	PS901674
	2006.06-2016.12	6MT	Rear	Chassis Cabin RWD 272979	Trans. code:NSG 370	Propshaft	PS900368
	2006.06-2016.12	6MT	Rear	Van RWD 272979	Trans. code:NSG 370	Propshaft	PS900368
	2006.06-2016.12	6MT	Rear	Chassis Cabin RWD 272979	Trans. code:ZF 6S-450	Propshaft	PS900558
	2006.06-2016.12	6MT	Rear	Van RWD 272979	Trans. code:ZF 6S-450	Propshaft	PS900558
	2006.06-2016.12	AT	Rear	Chassis Cabin RWD 272979		Propshaft	PS901368
	2006.06-2016.12	AT	Rear	Van RWD 272979		Propshaft	PS901368
	2006.06-2016.12		Centre	Chassis Cabin RWD 272979		Center Bearing Support	538627
	2006.06-2016.12		Centre	Van RWD 272979		Center Bearing Support	538627
	2006.06-2016.12		Centre	Chassis Cabin RWD 272979		Center Bearing Support	538635
	2006.06-2016.12		Centre	Van RWD 272979		Center Bearing Support	538635
	2006.06-2016.12		Centre	Chassis Cabin RWD 272979		Center Bearing Support Kit	538680S
	2006.06-2016.12		Centre	Van RWD 272979		Center Bearing Support Kit	538680S
	2006.06-2016.12		Centre	Chassis Cabin RWD 272979		Center Bearing Support Kit	538693S
	2006.06-2016.12		Centre	Van RWD 272979		Center Bearing Support Kit	538693S
	2006.06-2016.12		Front;Rear	Chassis Cabin RWD 272979		Flexible Coupling	533884
	2006.06-2016.12		Front;Rear	Van RWD 272979		Flexible Coupling	533884
	2006.06-2016.12		Front;Rear	Chassis Cabin RWD 272979		Flexible Coupling Kit	537832S
	2006.06-2016.12		Front;Rear	Van RWD 272979		Flexible Coupling Kit	537832S
Sprinter 509D							
2.2 (65 kw)	2006.06-2009.12	MT	Front	Chassis Cabin RWD 646984	Chassis no. to:N478535/E057183	Propshaft	PS900365
	2006.06-2009.12	MT	Front	Van RWD 646984	Chassis no. to:N478535/E057183	Propshaft	PS900365
	2006.06-2009.12	6MT	Rear	Chassis Cabin RWD 646984	Trans. code:NSG 370;for OE No.:A9064102116	Propshaft	PS900368
	2006.06-2009.12	6MT	Rear	Van RWD 646984	Trans. code:NSG 370;for OE No.:A9064100106	Propshaft	PS900368
	2006.06-2009.12	6MT	Rear	Chassis Cabin RWD 646984	Trans. code:TSG 360	Propshaft	PS900550
	2006.06-2009.12	6MT	Rear	Van RWD 646984	Trans. code:TSG 360	Propshaft	PS900550
	2006.06-2009.12	6MT	Rear	Chassis Cabin RWD 646984	Trans. code:ZF 6S-450	Propshaft	PS900558
	2006.06-2009.12	6MT	Rear	Van RWD 646984	Trans. code:ZF 6S-450	Propshaft	PS900558
	2006.06-2009.12	AT	Rear	Chassis Cabin RWD 646984	for OE No.: A9064100016	Propshaft	PS900367
	2006.06-2009.12	AT	Rear	Van RWD 646984	for OE No.:A9064100016	Propshaft	PS900367
	2006.06-2009.12	AT/6MT	Rear	Chassis Cabin RWD 646984	Trans. code:NSG 370/NSG 400;for OE No.:A9064100216	Propshaft	PS901368
	2006.06-2009.12	AT/6MT	Rear	Van RWD 646984	Trans. code:NSG 370/NSG 400;for OE No.:A9064100216	Propshaft	PS901368
	2006.06-2009.12		Centre	Chassis Cabin RWD 646984		Center Bearing Support	538627
	2006.06-2009.12		Centre	Van RWD 646984		Center Bearing Support	538627
	2006.06-2009.12		Centre	Chassis Cabin RWD 646984		Center Bearing Support	538635
	2006.06-2009.12		Centre	Van RWD 646984		Center Bearing Support	538635
	2006.06-2009.12		Front	Chassis Cabin RWD 646984		Center Bearing Support Kit	538681S
	2006.06-2009.12		Front	Van RWD 646984		Center Bearing Support Kit	538681S
	2006.06-2009.12		Centre	Chassis Cabin RWD 646984		Center Bearing Support Kit	538680S
	2006.06-2009.12		Centre	Van RWD 646984		Center Bearing Support Kit	538680S
	2006.06-2009.12		Centre	Chassis Cabin RWD 646984		Center Bearing Support Kit	538693S
	2006.06-2009.12		Centre	Van RWD 646984		Center Bearing Support Kit	538693S
	2006.06-2009.12		Front;Rear	Chassis Cabin RWD 646984		Flexible Coupling	533884
	2006.06-2009.12		Front;Rear	Van RWD 646984		Flexible Coupling	533884
	2006.06-2009.12		Front;Rear	Chassis Cabin RWD 646984		Flexible Coupling Kit	537832S
	2006.06-2009.12		Front;Rear	Van RWD 646984		Flexible Coupling Kit	537832S
Sprinter 510D							
2.2 (70 kw)	2009.03-2016.12	6MT	Front	Van RWD 651955/651956	Date from:2011.02,Chassis no. from:S 567427,Trans. code:NSG 400	Propshaft	PS901674
	2009.03-2016.12	AT	Front	Van RWD 651955/651956	Chassis no. from:S567427,Chassis no. to:S567426/E056828;Wheelbase:3250 mm	Propshaft	PS901464
	2009.03-2016.12	AT	Front	Chassis Cabin RWD 651955/651956	Chassis no. from:N478536,Chassis no. to:E057183/N478535;Wheelbase:3250 mm	Propshaft	PS901464
	2009.03-2016.12	6MT	Rear	Van RWD 651955/651956	Trans. code:NSG 370	Propshaft	PS900368
	2009.03-2016.12	6MT	Rear	Chassis Cabin RWD 651955/651956	Trans. code:NSG 370	Propshaft	PS900368
	2009.03-2016.12	6MT	Rear	Van RWD 651955/651956	Trans. code:TSG 360	Propshaft	PS900550
	2009.03-2016.12	6MT	Rear	Chassis Cabin RWD 651955/651956		Propshaft	PS900550
	2009.03-2016.12	6MT	Rear	Van RWD 651955/651956	Trans. code:ZF 6S-450	Propshaft	PS900558
	2009.03-2016.12	6MT	Rear	Chassis Cabin RWD 651955/651956	Trans. code:ZF 6S-450	Propshaft	PS900558
	2009.03-2016.12	6MT	Rear	Chassis Cabin RWD 651955/651956	Chassis no.from:N 418325,Chassis no.to:N 418535,Trainsm.Type:TSG 360	Propshaft	PS901684
	2009.03-2016.12	AT	Rear	Van RWD 651955/651956	Model code:906657,Wheel base:4325 mm	Propshaft	PS900559

	YEAR	TRANSM.	FITTING POSITION	BODY STYLE & DRIVE TYPE & ENGINE	REMARKS	PRODUCT	GSP Ref.
MERCEDES-BENZ							
Sprinter 510D							
2.2 (70 kw)	2009.03-2016.12	AT	Rear	Chassis Cabin RWD 651955/651956	Model code:906133,Wheel base:4325 mm	Propshaft	PS900559
	2009.03-2016.12	AT	Rear	Van RWD 651955/651956	Model code:906653,Wheel base:3665 mm	Propshaft	PS901965
	2009.03-2016.12	AT	Rear	Chassis Cabin RWD 651955/651956	Model code:906253,Wheel base:3665 mm	Propshaft	PS901965
	2009.03-2016.12		Centre	Van RWD 651955/651956		Center Bearing Support	538627
	2009.03-2016.12		Centre	Chassis Cabin RWD 651955/651956		Center Bearing Support	538627
	2009.03-2016.12		Centre	Van RWD 651955/651956		Center Bearing Support	538635
	2009.03-2016.12		Centre	Chassis Cabin RWD 651955/651956		Center Bearing Support	538635
	2009.03-2016.12		Front	Van RWD 651955/651956		Center Bearing Support Kit	538681S
	2009.03-2016.12		Front	Chassis Cabin RWD 651955/651956		Center Bearing Support Kit	538681S
	2009.03-2016.12		Centre	Van RWD 651955/651956		Center Bearing Support Kit	538680S
	2009.03-2016.12		Centre	Chassis Cabin RWD 651955/651956		Center Bearing Support Kit	538680S
	2009.03-2016.12		Centre	Van RWD 651955/651956		Center Bearing Support Kit	538693S
	2009.03-2016.12		Centre	Chassis Cabin RWD 651955/651956		Center Bearing Support Kit	538693S
	2009.03-2016.12		Front;Rear	Van RWD 651955/651956		Flexible Coupling	533884
	2009.03-2016.12		Front;Rear	Chassis Cabin RWD 651955/651956		Flexible Coupling	533884
	2009.03-2016.12		Front;Rear	Van RWD 651955/651956		Flexible Coupling Kit	537832S
	2009.03-2016.12		Front;Rear	Chassis Cabin RWD 651955/651956		Flexible Coupling Kit	537832S
Sprinter 511D							
2.2 (80 kw)	2006.06-2009.12	AT	Front	Van 4WD 646985	For Modelcode:906.655/906.657	Propshaft	PS900632
	2006.06-2009.12	MT	Front	Chassis Cabin RWD 646985	Chassis no. to:N478535/E057183	Propshaft	PS900365
	2006.06-2009.12	MT	Front	Van RWD 646985	Chassis no. to:N478535/E057183	Propshaft	PS900365
	2006.06-2009.12	6MT	Rear	Chassis Cabin RWD 646985	Trans. code:NSG 370;for OE No.:A9064100106	Propshaft	PS900368
	2006.06-2009.12	6MT	Rear	Van RWD 646985	Trans. code:NSG 370;for OE No.:A9064100106	Propshaft	PS900368
	2006.06-2009.12	6MT	Rear	Chassis Cabin RWD 646985	Trans. code:TSG 360	Propshaft	PS900550
	2006.06-2009.12	6MT	Rear	Van RWD 646985	Trans. code:TSG 360	Propshaft	PS900550
	2006.06-2009.12	6MT	Rear	Chassis Cabin RWD 646985	Trans. code:ZF 6S-450	Propshaft	PS900558
	2006.06-2009.12	6MT	Rear	Van RWD 646985	Trans. code:ZF 6S-450	Propshaft	PS900558
	2006.06-2009.12	6MT	Rear	Van 4WD 646985	For Modelcode:906655,Wheelbase:4325 mm;For Modelcode:906657	Propshaft	PS901855
	2006.06-2009.12	6MT	Rear	Chassis Cabin 4WD 646985	For Modelcode:906253/906153	Propshaft	PS901857
	2006.06-2009.12	6MT	Rear	Van 4WD 646985	For Modelcode:906653	Propshaft	PS901857
	2006.06-2009.12	AT	Rear	Chassis Cabin RWD 646985	Date from:2010.01;for OE No.:9064100016	Propshaft	PS900367
	2006.06-2009.12	AT	Rear	Van RWD 646985	Date from:2009.03;for OE No.:9064100016	Propshaft	PS900367
	2006.06-2009.12	AT/6MT	Rear	Chassis Cabin RWD 646985	Trans. code:NSG 370/NSG 400;for OE No.:A9064100216	Propshaft	PS901368
	2006.06-2009.12	AT/6MT	Rear	Van RWD 646985	Trans. code:NSG 370/NSG 400;for OE No.:A9064100216	Propshaft	PS901368
	2006.06-2009.12	AT	-	Chassis Cabin 4WD 646985	For Modelcode:906253/906153,Wheelbase:3665 mm;with STEUERCODE HN78RACHSE TELLERRAD 215,Trans. type:7G-TRONIC PLUS	Propshaft	PS901685
	2006.06-2009.12	AT	-	Van 4WD 646985	For Modelcode:906653,Wheelbase:3665 mm;with STEUERCODE HN78RACHSE TELLERRAD 215,Trans. type:7G-TRONIC PLUS	Propshaft	PS901685
	2006.06-2009.12	AT	-	Chassis Cabin 4WD 646985	For Modelcode:906253/906153,Wheelbase:3665 mm;without STEUERCODE HN78RACHSE TELLERRAD 215,Trans. type:7G-TRONIC PLUS	Propshaft	PS901708
	2006.06-2009.12	AT	-	Van 4WD 646985	For Modelcode:906653,Wheelbase:3665 mm;without STEUERCODE HN78RACHSE TELLERRAD 215,Trans. type:7G-TRONIC PLUS	Propshaft	PS901708
	2006.06-2009.12		Centre	Chassis Cabin RWD 646985		Center Bearing Support	538627
	2006.06-2009.12		Centre	Van RWD 646985		Center Bearing Support	538627
	2006.06-2009.12		Centre	Chassis Cabin 4WD 646985		Center Bearing Support	538627
	2006.06-2009.12		Centre	Van 4WD 646985		Center Bearing Support	538627
	2006.06-2009.12		Centre	Chassis Cabin RWD 646985		Center Bearing Support	538635
	2006.06-2009.12		Centre	Van RWD 646985		Center Bearing Support	538635
	2006.06-2009.12		Centre	Chassis Cabin 4WD 646985		Center Bearing Support	538635
	2006.06-2009.12		Centre	Van 4WD 646985		Center Bearing Support	538635
	2006.06-2009.12		Front	Chassis Cabin RWD 646985		Center Bearing Support Kit	538681S
	2006.06-2009.12		Front	Van RWD 646985		Center Bearing Support Kit	538681S
	2006.06-2009.12		Front	Chassis Cabin 4WD 646985		Center Bearing Support Kit	538681S
	2006.06-2009.12		Front	Van 4WD 646985		Center Bearing Support Kit	538681S
	2006.06-2009.12		Centre	Chassis Cabin RWD 646985		Center Bearing Support Kit	538680S
	2006.06-2009.12		Centre	Van RWD 646985		Center Bearing Support Kit	538680S
	2006.06-2009.12		Centre	Chassis Cabin 4WD 646985		Center Bearing Support Kit	538680S
	2006.06-2009.12		Centre	Van 4WD 646985		Center Bearing Support Kit	538680S
	2006.06-2009.12		Centre	Chassis Cabin RWD 646985		Center Bearing Support Kit	538693S
	2006.06-2009.12		Centre	Van RWD 646985		Center Bearing Support Kit	538693S
	2006.06-2009.12		Centre	Chassis Cabin 4WD 646985		Center Bearing Support Kit	538693S
	2006.06-2009.12		Centre	Van 4WD 646985		Center Bearing Support Kit	538693S
	2006.06-2009.12		Front;Rear	Chassis Cabin RWD 646985		Flexible Coupling	533884
	2006.06-2009.12		Front;Rear	Van RWD 646985		Flexible Coupling	533884
	2006.06-2009.12		Front;Rear	Chassis Cabin 4WD 646985		Flexible Coupling	533884
	2006.06-2009.12		Front;Rear	Van 4WD 646985		Flexible Coupling	533884
	2006.06-2009.12		Front;Rear	Chassis Cabin RWD 646985		Flexible Coupling Kit	537832S
	2006.06-2009.12		Front;Rear	Van RWD 646985		Flexible Coupling Kit	537832S

	YEAR	TRANSM.	FITTING POSITION	BODY STYLE & DRIVE TYPE & ENGINE	REMARKS	PRODUCT	GSP Ref.
MERCEDES-BENZ							
Sprinter 511D							
2.2 (80 kw)	2006.06-2009.12		Front;Rear	Chassis Cabin 4WD 646985		Flexible Coupling Kit	537832S
	2006.06-2009.12		Front;Rear	Van 4WD 646985		Flexible Coupling Kit	537832S
2.2 (84 kw)	2016.04-2018.12	6MT	Front	Van RWD 651955/651956	Date from:2016.09,Chassis no. from:P333970,Trans. code:TSG 360	Propshaft	PS900609
	2016.04-2018.12	6MT	Rear	Van RWD 651955/651956	Trans. code:NSG 370	Propshaft	PS900368
	2016.04-2018.12	6MT	Rear	Van RWD 651955/651956	Trans. code:ZF 6S-450	Propshaft	PS900558
	2016.04-2018.12	AT	Rear	Van RWD 651955/651956	Model code:906653	Propshaft	PS901965
	2016.04-2018.12		Centre	Van RWD 651955/651956		Center Bearing Support	538627
	2016.04-2018.12		Centre	Van RWD 651955/651956		Center Bearing Support	538635
	2016.04-2018.12		Front	Van RWD 651955/651956		Center Bearing Support Kit	538681S
	2016.04-2018.12		Centre	Van RWD 651955/651956		Center Bearing Support Kit	538693S
	2016.04-2018.12		Front;Rear	Van RWD 651955/651956		Flexible Coupling	533884
	2016.04-2018.12		Front;Rear	Van RWD 651955/651956		Flexible Coupling Kit	537832S
	2016.05-2018.12	6MT	Rear	Chassis Cabin RWD 651955/651956	Trans. code:NSG 370	Propshaft	PS900368
	2016.05-2018.12	6MT	Rear	Chassis Cabin RWD 651955/651956	Trans. code:ZF 6S-450	Propshaft	PS900558
	2016.05-2018.12	AT	Rear	Chassis Cabin RWD 651955/651956	Model code:906253/906153,Wheel base:3665 mm	Propshaft	PS901965
	2016.05-2018.12		Centre	Chassis Cabin RWD 651955/651956		Center Bearing Support	538627
	2016.05-2018.12		Centre	Chassis Cabin RWD 651955/651956		Center Bearing Support	538635
	2016.05-2018.12		Front	Chassis Cabin RWD 651955/651956		Center Bearing Support Kit	538681S
	2016.05-2018.12		Centre	Chassis Cabin RWD 651955/651956		Center Bearing Support Kit	538693S
	2016.05-2018.12		Front;Rear	Chassis Cabin RWD 651955/651956		Flexible Coupling	533884
	2016.05-2018.12		Front;Rear	Chassis Cabin RWD 651955/651956		Flexible Coupling Kit	537832S
	2018.02-		Centre	Van RWD 651958		Center Bearing Support	538627
	2018.02-		Centre	Chassis Cabin RWD 651958		Center Bearing Support	538627
	2018.02-		Centre	Van RWD 651958		Center Bearing Support Kit	539925S
	2018.02-		Centre	Chassis Cabin RWD 651958		Center Bearing Support Kit	539925S
	2018.02-		Front;Rear	Van RWD 651958		Flexible Coupling	533884
	2018.02-		Front;Rear	Chassis Cabin RWD 651958		Flexible Coupling	533884
Sprinter 513D							
2.2 (95 kw)	2009.03-2016.05	MT	Front	Chassis Cabin RWD 646986	Chassis no. to:N478535/E057183	Propshaft	PS900365
	2009.03-2016.05	6MT	Rear	Chassis Cabin RWD 646986	Trans. code:NSG 370	Propshaft	PS900368
	2009.03-2016.05	6MT	Rear	Chassis Cabin RWD 646986		Propshaft	PS900550
	2009.03-2016.05	6MT	Rear	Chassis Cabin RWD 646986	Date from:2009.03,Trans. code:ZF 6S-450	Propshaft	PS900558
	2009.03-2016.05	6MT	Rear	Chassis Cabin RWD 646986	Date to:2011.02,Chassis no.from:N 418325,Chassis no.to:N 418535,Transm.Type:TSG 360	Propshaft	PS901684
	2009.03-2016.05	AT	Rear	Chassis Cabin RWD 646986	for OE No.:9064100016	Propshaft	PS900367
	2009.03-2016.05	AT	Rear	Chassis Cabin RWD 646986	Date from:2011.04,Chassis no. from:56829;for OE No.:A9064107816	Propshaft	PS900559
	2009.03-2016.05		Centre	Chassis Cabin RWD 646986		Center Bearing Support	538627
	2009.03-2016.05		Centre	Chassis Cabin RWD 646986		Center Bearing Support	538635
	2009.03-2016.05		Front	Chassis Cabin RWD 646986		Center Bearing Support Kit	538681S
	2009.03-2016.05		Centre	Chassis Cabin RWD 646986		Center Bearing Support Kit	538680S
	2009.03-2016.05		Centre	Chassis Cabin RWD 646986		Center Bearing Support Kit	538693S
	2009.03-2016.05		Front;Rear	Chassis Cabin RWD 646986		Flexible Coupling	533884
	2009.03-2016.05		Front;Rear	Chassis Cabin RWD 646986		Flexible Coupling Kit	537832S
	2009.03-2016.12	AT	Front	Chassis Cabin RWD 651955/651956/651957	Chassis no. from:N478536,Chassis no. to:E057183/N478535;Wheelbase:3250 mm	Propshaft	PS901464
	2009.03-2016.12	6MT	Rear	Chassis Cabin RWD 651955/651956/651957	Trans. code:NSG 370;for OE No.:A9064102116	Propshaft	PS900368
	2009.03-2016.12	6MT	Rear	Chassis Cabin RWD 651955/651956/651957	Trans. code:TSG 360;without Flexible Coupling	Propshaft	PS900550
	2009.03-2016.12	6MT	Rear	Chassis Cabin RWD 651955/651956/651957	Date from:2009.03,Trans. code:ZF 6S-450	Propshaft	PS900558
	2009.03-2016.12	6MT	Rear	Chassis Cabin RWD 651955/651956/651957	Date from:2009.03,Date to:2011.02,Chassis no.from:N 418535,Chassis no.to:N 418635,Transm.Type:TSG 360	Propshaft	PS901684
	2009.03-2016.12	6MT	Rear	Van 4WD 651955/651956/651957	For Modelcode:906655,Wheelbase:4325 mm	Propshaft	PS901855
	2009.03-2016.12	AT	Rear	Chassis Cabin RWD 651955/651956/651957	Model code:906133,Wheel base:4325 mm	Propshaft	PS900367
	2009.03-2016.12	AT	Rear	Chassis Cabin RWD 651955/651956/651957	Model code:906253,Wheel base:4325 mm	Propshaft	PS900559
	2009.03-2016.12	AT	Rear	Chassis Cabin RWD 651955/651956/651957	Model code:906253,Wheel base:3665 mm	Propshaft	PS901965
	2009.03-2016.12	AT	-	Chassis Cabin 4WD 651955/651956/651957	For Modelcode:906253/906153,Wheelbase:3665 mm;with STEUERCODE HINTERACHSE TELLERRAD 215,Trans. type:TG-TRONIC PLUS	Propshaft	PS901685
	2009.03-2016.12	AT	-	Van 4WD 651955/651956/651957	For Modelcode:906653,Wheelbase:3665 mm;with STEUERCODE HINTERACHSE TELLERRAD 215,Trans. type:TG-TRONIC PLUS	Propshaft	PS901685
	2009.03-2016.12	AT	-	Chassis Cabin 4WD 651955/651956/651957	For Modelcode:906253/906153,Wheelbase:3665 mm;without STEUERCODE HINTERACHSE TELLERRAD 215,Trans. type:TG-TRONIC PLUS	Propshaft	PS901708
	2009.03-2016.12	AT	-	Van 4WD 651955/651956/651957	For Modelcode:906653,Wheelbase:3665 mm;without STEUERCODE HINTERACHSE TELLERRAD 215,Trans. type:TG-TRONIC PLUS	Propshaft	PS901708
	2009.03-2016.12		Centre	Chassis Cabin RWD 651955/651956/651957		Center Bearing Support	538627
	2009.03-2016.12		Centre	Chassis Cabin 4WD 651955/651956/651957		Center Bearing Support	538627
	2009.03-2016.12		Centre	Van 4WD 651955/651956/651957		Center Bearing Support	538627
	2009.03-2016.12		Centre	Chassis Cabin RWD 651955/651956/651957		Center Bearing Support	538635
	2009.03-2016.12		Centre	Chassis Cabin 4WD 651955/651956/651957		Center Bearing Support	538635
	2009.03-2016.12		Centre	Van 4WD 651955/651956/651957		Center Bearing Support	538635
	2009.03-2016.12		Front	Chassis Cabin RWD 651955/651956/651957		Center Bearing Support Kit	538681S
	2009.03-2016.12		Front	Chassis Cabin 4WD 651955/651956/651957		Center Bearing Support Kit	538681S
	2009.03-2016.12		Front	Van 4WD 651955/651956/651957		Center Bearing Support Kit	538681S

	YEAR	TRANSM.	FITTING POSITION	BODY STYLE & DRIVE TYPE & ENGINE	REMARKS	PRODUCT	GSP Ref.
MERCEDES-BENZ							
Sprinter 513D							
2.2 (95 kw)	2009.03-2016.12		Front	Bus RWD 651955		Center Bearing Support Kit	538681S
	2009.03-2016.12		Centre	Chassis Cabin RWD 651955/651956/651957		Center Bearing Support Kit	538680S
	2009.03-2016.12		Centre	Chassis Cabin 4WD 651955/651956/651957		Center Bearing Support Kit	538680S
	2009.03-2016.12		Centre	Van 4WD 651955/651956/651957		Center Bearing Support Kit	538680S
	2009.03-2016.12		Centre	Chassis Cabin RWD 651955/651956/651957		Center Bearing Support Kit	538693S
	2009.03-2016.12		Centre	Chassis Cabin 4WD 651955/651956/651957		Center Bearing Support Kit	538693S
	2009.03-2016.12		Centre	Van 4WD 651955/651956/651957		Center Bearing Support Kit	538693S
	2009.03-2016.12		Front;Rear	Chassis Cabin RWD 651955/651956/651957	Engine Code:OM 651.956	Flexible Coupling	533884
	2009.03-2016.12		Front;Rear	Chassis Cabin 4WD 651955/651956/651957	Engine Code:OM 651.956	Flexible Coupling	533884
	2009.03-2016.12		Front;Rear	Van 4WD 651955/651956/651957	Engine Code:OM 651.956	Flexible Coupling	533884
	2009.03-2016.12		Front;Rear	Bus RWD 651955		Flexible Coupling	533884
	2009.03-2016.12		Front;Rear	Chassis Cabin RWD 651955/651956/651957		Flexible Coupling Kit	537832S
	2009.03-2016.12		Front;Rear	Chassis Cabin 4WD 651955/651956/651957		Flexible Coupling Kit	537832S
	2009.03-2016.12		Front;Rear	Van 4WD 651955/651956/651957		Flexible Coupling Kit	537832S
	2009.03-2016.12		Front;Rear	Bus RWD 651955		Flexible Coupling Kit	537832S
	2009.03-2018.06	6MT	Front	Van RWD 646986	Date from:2011.02,Chassis no. from:S 567427,Trans. code:NSG 400	Propshaft	PS901674
	2009.03-2018.06	AT	Front	Van RWD 651955/651956/651957	Chassis no. to:W570126,Date to:2011.04,Chassis no. to:F559189,Date to:2011.01,Chassis no. from:567427,Date from:2011.02,Wheelbase:3665 mm	Propshaft	PS901464
	2009.03-2018.06	MT	Front	Van RWD 646986	Chassis no. to:N478535/E057183	Propshaft	PS900365
	2009.03-2018.06	6MT	Rear	Van RWD 646986	Trans. code:NSG 370	Propshaft	PS900368
	2009.03-2018.06	6MT	Rear	Van RWD 646986	Date from:2009.03,Trans. code:TSG 360	Propshaft	PS900550
	2009.03-2018.06	6MT	Rear	Van RWD 646986	Date from:2009.03,Trans. code:ZF 6S-450	Propshaft	PS900558
	2009.03-2018.06	AT	Rear	Van RWD 646986	Date from:2009.03;for OE No.:9064100016	Propshaft	PS900367
	2009.03-2018.06	AT	Rear	Van RWD 646986	Date from:2011.04,Chassis no. from:56829;for OE No.:A9064107816	Propshaft	PS900559
	2009.03-2018.06	AT	Rear	Van RWD 651955/651956/651957	Model code:906653	Propshaft	PS901965
	2009.03-2018.06		Centre	Van RWD 646986		Center Bearing Support	538627
	2009.03-2018.06		Centre	Van RWD 651955/651956/651957		Center Bearing Support	538627
	2009.03-2018.06		Centre	Van RWD 646986		Center Bearing Support	538635
	2009.03-2018.06		Centre	Van RWD 651955/651956/651957		Center Bearing Support	538635
	2009.03-2018.06		Front	Van RWD 646986		Center Bearing Support Kit	538681S
	2009.03-2018.06		Front	Van RWD 651955/651956/651957		Center Bearing Support Kit	538681S
	2009.03-2018.06		Centre	Van RWD 646986		Center Bearing Support Kit	538680S
	2009.03-2018.06		Centre	Van RWD 651955/651956/651957		Center Bearing Support Kit	538680S
	2009.03-2018.06		Centre	Van RWD 646986		Center Bearing Support Kit	538693S
	2009.03-2018.06		Centre	Van RWD 651955/651956/651957		Center Bearing Support Kit	538693S
	2009.03-2018.06		Front;Rear	Van RWD 646986		Flexible Coupling	533884
	2009.03-2018.06		Front;Rear	Van RWD 651955/651956/651957	Engine Code:OM 651.956	Flexible Coupling	533884
	2009.03-2018.06		Front;Rear	Van RWD 646986		Flexible Coupling Kit	537832S
	2009.03-2018.06		Front;Rear	Van RWD 651955/651956/651957		Flexible Coupling Kit	537832S
Sprinter 514D							
2.2 (105 kw)	2016.04-2018.12	6MT	Rear	Van 4WD 651955/651956	For Modelcode:906655,Wheelbase:4325 mm	Propshaft	PS901855
	2016.04-2018.12	AT	-	Van 4WD 651955/651956	For Modelcode:906653,Wheelbase:3665 mm;with STEUERCODE HW3TERACHSE TELLERRAD 215,Trans. type:7G-TRONIC PLUS	Propshaft	PS901685
	2016.04-2018.12	AT	-	Van 4WD 651955/651956	For Modelcode:906653,Wheelbase:3665 mm;without STEUERCODE HW3TERACHSE TELLERRAD 215,Trans. type:7G-TRONIC PLUS	Propshaft	PS901708
	2016.04-2018.12		Centre	Van 4WD 651955/651956		Center Bearing Support	538627
	2016.04-2018.12		Centre	Van 4WD 651955/651956		Center Bearing Support	538635
	2016.04-2018.12		Front	Van 4WD 651955/651956		Center Bearing Support Kit	538681S
	2016.04-2018.12		Centre	Van 4WD 651955/651956		Center Bearing Support Kit	538693S
	2016.04-2018.12		Front;Rear	Van 4WD 651955/651956		Flexible Coupling	533884
	2016.04-2018.12		Front;Rear	Van 4WD 651955/651956		Flexible Coupling Kit	537832S
	2016.05-2018.12	6MT	Rear	Van RWD 651955/651956	Trans. code:NSG 370	Propshaft	PS900368
	2016.05-2018.12	6MT	Rear	Chassis Cabin 4WD 651955/651956	Model code:906.153/906.253,Trans. code:NSG 370	Propshaft	PS900368
	2016.05-2018.12	6MT	Rear	Chassis Cabin RWD 651955/651956	Trans. code:NSG 370	Propshaft	PS900368
	2016.05-2018.12	6MT	Rear	Van RWD 651955/651956	Trans. code:ZF 6S-450	Propshaft	PS900558
	2016.05-2018.12	6MT	Rear	Chassis Cabin RWD 651955/651956	Trans. code:ZF 6S-450	Propshaft	PS900558
	2016.05-2018.12	AT	Rear	Van RWD 651955/651956	Model code:906653	Propshaft	PS901965
	2016.05-2018.12	AT	Rear	Chassis Cabin RWD 651955/651956	Model code:906253,Wheel base:3665 mm	Propshaft	PS901965
	2016.05-2018.12	AT	-	Chassis Cabin 4WD 651955/651956	For Modelcode:906253/906153,Wheelbase:3665 mm;with STEUERCODE HW3TERACHSE TELLERRAD 215,Trans. type:7G-TRONIC PLUS	Propshaft	PS901685
	2016.05-2018.12	AT	-	Chassis Cabin 4WD 651955/651956	For Modelcode:906253/906153,Wheelbase:3665 mm;without STEUERCODE HW3TERACHSE TELLERRAD 215,Trans. type:7G-TRONIC PLUS	Propshaft	PS901708
	2016.05-2018.12		Centre	Van RWD 651955/651956		Center Bearing Support	538627
	2016.05-2018.12		Centre	Chassis Cabin 4WD 651955/651956		Center Bearing Support	538627
	2016.05-2018.12		Centre	Chassis Cabin RWD 651955/651956		Center Bearing Support	538627
	2016.05-2018.12		Centre	Van RWD 651955/651956		Center Bearing Support	538635
	2016.05-2018.12		Centre	Chassis Cabin 4WD 651955/651956		Center Bearing Support	538635
	2016.05-2018.12		Centre	Chassis Cabin RWD 651955/651956		Center Bearing Support	538635
	2016.05-2018.12		Front	Van RWD 651955/651956		Center Bearing Support Kit	538681S

	YEAR	TRANSM.	FITTING POSITION	BODY STYLE & DRIVE TYPE & ENGINE	REMARKS	PRODUCT	GSP Ref.
MERCEDES-BENZ							
Sprinter 514D							
2.2 (105 kw)	2016.05-2018.12		Front	Chassis Cabin 4WD 651955/651956		Center Bearing Support Kit	538681S
	2016.05-2018.12		Front	Chassis Cabin RWD 651955/651956		Center Bearing Support Kit	538681S
	2016.05-2018.12		Centre	Van RWD 651955/651956		Center Bearing Support Kit	538693S
	2016.05-2018.12		Centre	Chassis Cabin 4WD 651955/651956		Center Bearing Support Kit	538693S
	2016.05-2018.12		Centre	Chassis Cabin RWD 651955/651956		Center Bearing Support Kit	538693S
	2016.05-2018.12		Front;Rear	Van RWD 651955/651956		Flexible Coupling	533884
	2016.05-2018.12		Front;Rear	Chassis Cabin 4WD 651955/651956		Flexible Coupling	533884
	2016.05-2018.12		Front;Rear	Chassis Cabin RWD 651955/651956		Flexible Coupling	533884
	2016.05-2018.12		Front;Rear	Van RWD 651955/651956		Flexible Coupling Kit	537832S
	2016.05-2018.12		Front;Rear	Chassis Cabin 4WD 651955/651956		Flexible Coupling Kit	537832S
	2016.05-2018.12		Front;Rear	Chassis Cabin RWD 651955/651956		Flexible Coupling Kit	537832S
	2018.02-		Centre	Van RWD 651958		Center Bearing Support	538627
	2018.02-		Centre	Chassis Cabin RWD 651958		Center Bearing Support	538627
	2018.02-		Centre	Van RWD 651958		Center Bearing Support Kit	539925S
	2018.02-		Centre	Chassis Cabin RWD 651958		Center Bearing Support Kit	539925S
	2018.02-		Front;Rear	Van RWD 651958		Flexible Coupling	533884
	2018.02-		Front;Rear	Chassis Cabin RWD 651958		Flexible Coupling	533884
Sprinter 515D							
2.0 (110 kw)	2021.10-		Centre	Chassis Cabin RWD 654920		Center Bearing Support	538627
	2021.10-		Centre	Van RWD 654920		Center Bearing Support	538627
	2021.10-		Centre	Chassis Cabin RWD 654920		Center Bearing Support Kit	538693S
	2021.10-		Centre	Van RWD 654920		Center Bearing Support Kit	538693S
2.2 (110 kw)	2006.06-2009.12	AT	Front	Van 4WD 646986/646989/646990	For Modelcode:906.655/906.657	Propshaft	PS900632
	2006.06-2009.12	MT	Front	Chassis Cabin RWD 646986/646989/646990	Chassis no. to:N478535/E057183	Propshaft	PS900365
	2006.06-2009.12	MT	Front	Van RWD 646986/646989/646990	Chassis no. to:N478535/E057183	Propshaft	PS900365
	2006.06-2009.12	6MT	Rear	Chassis Cabin RWD 646986/646989/646990	Trans. code:NSG 370	Propshaft	PS900368
	2006.06-2009.12	6MT	Rear	Van RWD 646986/646989/646990	Trans. code:NSG 370	Propshaft	PS900368
	2006.06-2009.12	6MT	Rear	Chassis Cabin RWD 646986/646989/646990	Trans. code:TSG 360	Propshaft	PS900550
	2006.06-2009.12	6MT	Rear	Van RWD 646986/646989/646990	Trans. code:TSG 360;For OE no.:A9064105806	Propshaft	PS900550
	2006.06-2009.12	6MT	Rear	Chassis Cabin RWD 646986/646989/646990	Trans. code:ZF 6S-450	Propshaft	PS900558
	2006.06-2009.12	6MT	Rear	Van RWD 646986/646989/646990	Trans. code:ZF 6S-450	Propshaft	PS900558
	2006.06-2009.12	6MT	Rear	Van RWD 646986/646989/646990	Chassis no. to:S WENDEN 088808;Engine Code:OM 651 DK22 LA;Trans. code:TSG 360;For OE no.:A9064105806	Propshaft	PS901365
	2006.06-2009.12	6MT	Rear	Van 4WD 646986/646989/646990	For Modelcode:906655,Wheelbase:4325 mm;For Modelcode:906657	Propshaft	PS901855
	2006.06-2009.12	6MT	Rear	Van 4WD 646986/646989/646990	For Modelcode:906653,with STEUERCODE HINTERACHSE TELLERRAD 215	Propshaft	PS901857
	2006.06-2009.12	6MT	Rear	Chassis Cabin 4WD 646986/646989/646990	For Modelcode:906253/906153	Propshaft	PS901857
	2006.06-2009.12	AT	Rear	Chassis Cabin RWD 646986/646989/646990		Propshaft	PS900367
	2006.06-2009.12	AT	Rear	Van RWD 646986/646989/646990		Propshaft	PS900367
	2006.06-2009.12	6MT	-	Van 4WD 646986/646989/646990	For Modelcode:906653,with STEUERCODE HINTERACHSE TELLERRAD 215	Propshaft	PS901365
	2006.06-2009.12	AT	-	Van 4WD 646986/646989/646990	For Modelcode:906653,Wheelbase:3665 mm,with STEUERCODE HINTERACHSE TELLERRAD 215,Trans. type:722.7RDNC PLUS	Propshaft	PS901685
	2006.06-2009.12	AT	-	Chassis Cabin 4WD 646986/646989/646990	For Modelcode:906253/906153,Wheelbase:3665 mm,with STEUERCODE HINTERACHSE TELLERRAD 215,Trans. type:722.7RDNC PLUS	Propshaft	PS901685
	2006.06-2009.12	AT	-	Van 4WD 646986/646989/646990	For Modelcode:906653,Wheelbase:3665 mm,without STEUERCODE HINTERACHSE TELLERRAD 215,Trans. type:722.7RDNC PLUS	Propshaft	PS901708
	2006.06-2009.12	AT	-	Chassis Cabin 4WD 646986/646989/646990	For Modelcode:906253/906153,Wheelbase:3665 mm,without STEUERCODE HINTERACHSE TELLERRAD 215,Trans. type:722.7RDNC PLUS	Propshaft	PS901708
	2006.06-2009.12		Centre	Chassis Cabin RWD 646986/646989/646990		Center Bearing Support	538627
	2006.06-2009.12		Centre	Van RWD 646986/646989/646990		Center Bearing Support	538627
	2006.06-2009.12		Centre	Van 4WD 646986/646989/646990		Center Bearing Support	538627
	2006.06-2009.12		Centre	Chassis Cabin 4WD 646986/646989/646990		Center Bearing Support	538627
	2006.06-2009.12		Centre	Chassis Cabin RWD 646986/646989/646990		Center Bearing Support	538635
	2006.06-2009.12		Centre	Van RWD 646986/646989/646990		Center Bearing Support	538635
	2006.06-2009.12		Centre	Van 4WD 646986/646989/646990		Center Bearing Support	538635
	2006.06-2009.12		Centre	Chassis Cabin 4WD 646986/646989/646990		Center Bearing Support	538635
	2006.06-2009.12		Front	Chassis Cabin RWD 646986/646989/646990		Center Bearing Support Kit	538681S
	2006.06-2009.12		Front	Van RWD 646986/646989/646990		Center Bearing Support Kit	538681S
	2006.06-2009.12		Front	Van 4WD 646986/646989/646990		Center Bearing Support Kit	538681S
	2006.06-2009.12		Front	Chassis Cabin 4WD 646986/646989/646990		Center Bearing Support Kit	538681S
	2006.06-2009.12		Centre	Chassis Cabin RWD 646986/646989/646990		Center Bearing Support Kit	538680S
	2006.06-2009.12		Centre	Van RWD 646986/646989/646990		Center Bearing Support Kit	538680S
	2006.06-2009.12		Centre	Van 4WD 646986/646989/646990		Center Bearing Support Kit	538680S
	2006.06-2009.12		Centre	Chassis Cabin 4WD 646986/646989/646990		Center Bearing Support Kit	538680S
	2006.06-2009.12		Centre	Chassis Cabin RWD 646986/646989/646990		Center Bearing Support Kit	538693S
	2006.06-2009.12		Centre	Van RWD 646986/646989/646990		Center Bearing Support Kit	538693S
	2006.06-2009.12		Centre	Van 4WD 646986/646989/646990		Center Bearing Support Kit	538693S
	2006.06-2009.12		Centre	Chassis Cabin 4WD 646986/646989/646990		Center Bearing Support Kit	538693S
	2006.06-2009.12		Front;Rear	Chassis Cabin RWD 646986/646989/646990		Flexible Coupling	533884
	2006.06-2009.12		Front;Rear	Van RWD 646986/646989/646990		Flexible Coupling	533884

	YEAR	TRANSM.	FITTING POSITION	BODY STYLE & DRIVE TYPE & ENGINE	REMARKS	PRODUCT	GSP Ref.
MERCEDES-BENZ							
Sprinter 515D							
2.2 (110 kw)	2006.06-2009.12		Front;Rear	Van 4WD 646986/646989/646990		Flexible Coupling	533884
	2006.06-2009.12		Front;Rear	Chassis Cabin 4WD 646986/646989/646990		Flexible Coupling	533884
	2006.06-2009.12		Front;Rear	Chassis Cabin RWD 646986/646989/646990		Flexible Coupling Kit	537832S
	2006.06-2009.12		Front;Rear	Van RWD 646986/646989/646990		Flexible Coupling Kit	537832S
	2006.06-2009.12		Front;Rear	Van 4WD 646986/646989/646990		Flexible Coupling Kit	537832S
	2006.06-2009.12		Front;Rear	Chassis Cabin 4WD 646986/646989/646990		Flexible Coupling Kit	537832S
Sprinter 516							
1.8 (115 kw)	2009.03-2018.12	6MT	Rear	Chassis Cabin RWD 271951	Date from:2009.03,Trans. code:ZF 6S-450,Wheel base:4325 mm	Propshaft	PS900558
	2009.03-2018.12	6MT	Rear	Chassis Cabin RWD 271951	Model code:906153,Wheel base:3665 mm	Propshaft	PS901986
	2009.03-2018.12	AT	Rear	Chassis Cabin RWD 271951	Model code:906153	Propshaft	PS901983
	2009.03-2018.12		Centre	Chassis Cabin RWD 271951		Center Bearing Support	538627
	2009.03-2018.12		Centre	Chassis Cabin RWD 271951		Center Bearing Support	538635
	2009.03-2018.12		Centre	Chassis Cabin RWD 271951		Center Bearing Support Kit	538680S
	2009.03-2018.12		Centre	Chassis Cabin RWD 271951		Center Bearing Support Kit	538693S
	2009.03-2018.12		Front;Rear	Van RWD 271951		Flexible Coupling	533884
	2009.03-2018.12		Front;Rear	Chassis Cabin RWD 271951		Flexible Coupling	533884
	2009.03-2018.12		Front;Rear	Van RWD 271951		Flexible Coupling Kit	537832S
	2009.03-2018.12		Front;Rear	Chassis Cabin RWD 271951		Flexible Coupling Kit	537832S
Sprinter 516 NGT							
1.8 (115 kw)	2009.03-2018.12		Centre	Chassis Cabin RWD 271951NGT		Center Bearing Support	538627
	2009.03-2018.12		Centre	Chassis Cabin RWD 271951NGT		Center Bearing Support	538635
	2009.03-2018.12		Centre	Chassis Cabin RWD 271951NGT		Center Bearing Support Kit	538680S
	2009.03-2018.12		Centre	Chassis Cabin RWD 271951NGT		Center Bearing Support Kit	538693S
	2009.03-2018.12		Front;Rear	Van RWD 271951NGT		Flexible Coupling	533884
	2009.03-2018.12		Front;Rear	Chassis Cabin RWD 271951NGT		Flexible Coupling	533884
	2009.03-2018.12		Front;Rear	Van RWD 271951NGT		Flexible Coupling Kit	537832S
	2009.03-2018.12		Front;Rear	Chassis Cabin RWD 271951NGT		Flexible Coupling Kit	537832S
Sprinter 516D							
2.2 (120 kw)	2009.03-2018.12	6MT	Front	Van RWD 651955/651956/651957	Date from:2011.02,Chassis no. from:S 567427,Trans. code:NSG 400	Propshaft	PS901674
	2009.03-2018.12	6MT	Front	Bus RWD 651955/651956	Chassis no. from:S 567427,Trans. code:NSG 400	Propshaft	PS901674
	2009.03-2018.12	AT	Front	Van RWD 651955/651956/651957	Wheelbase:4325 mm	Propshaft	PS901464
	2009.03-2018.12	AT	Front	Chassis Cabin RWD 651955/651956/651957	Chassis no. to:S 567427,Date to:2011.02,Chassis no. from:N 576536,Date from:2011.02,Wheelbase:4325 mm	Propshaft	PS901464
	2009.03-2018.12	6MT	Rear	Van RWD 651955/651956/651957	Trans. code:NSG 370,Wheelbase:3665 mm	Propshaft	PS900368
	2009.03-2018.12	6MT	Rear	Chassis Cabin RWD 651955/651956/651957	Trans. code:NSG 370	Propshaft	PS900368
	2009.03-2018.12	6MT	Rear	Bus RWD 651955/651956	Trans.code:NSG 370;for OE No.:A9064102116	Propshaft	PS900368
	2009.03-2018.12	6MT	Rear	Van RWD 651955/651956/651957	Trans. code:TSG 360;for OE NO.:A9064105806	Propshaft	PS900550
	2009.03-2018.12	6MT	Rear	Chassis Cabin RWD 651955/651956/651957	Trans. code:TSG 360;without Flexible Coupling	Propshaft	PS900550
	2009.03-2018.12	6MT	Rear	Bus RWD 651955/651956	Trans.code:TSG 360	Propshaft	PS900550
	2009.03-2018.12	6MT	Rear	Van RWD 651955/651956/651957	Trans. code:ZF 6S-450	Propshaft	PS900558
	2009.03-2018.12	6MT	Rear	Chassis Cabin RWD 651955/651956/651957	Trans. code:ZF 6S-450	Propshaft	PS900558
	2009.03-2018.12	6MT	Rear	Bus RWD 651955/651956	Trans.code:ZF 6S-450	Propshaft	PS900558
	2009.03-2018.12	6MT	Rear	Bus RWD 651955/651956	Date from:2011.02,Chassis no. from:S 5674216 056809,Trans. code:NSG 370;for OE No.:A9064108056	Propshaft	PS901367
	2009.03-2018.12	6MT	Rear	Chassis Cabin RWD 651955/651956/651957	Date to:2011.02,Chassis no.from:N 418325,Chassis no.to:N 418535,Transm.:Type:TSG 360	Propshaft	PS901684
	2009.03-2018.12	6MT	Rear	Van 4WD 651955/651956/651957	For Modelcode:906655,Wheelbase:4325 mm	Propshaft	PS901855
	2009.03-2018.12	AT	Rear	Van RWD 651955/651956/651957	Model code:906637,Wheel base:4325 mm	Propshaft	PS900559
	2009.03-2018.12	AT	Rear	Chassis Cabin RWD 651955/651956/651957	Wheel base:4325 mm	Propshaft	PS900559
	2009.03-2018.12	AT	Rear	Bus RWD 651955/651956	Chassis no. from:56829/573459	Propshaft	PS900559
	2009.03-2018.12	AT	Rear	Van RWD 651955/651956/651957	Model code:906653	Propshaft	PS901965
	2009.03-2018.12	AT	Rear	Chassis Cabin RWD 651955/651956/651957	Model code:906253,Wheel base:3665 mm	Propshaft	PS901965
	2009.03-2018.12	AT	-	Chassis Cabin 4WD 651955/651956/651957	For Modelcode:906253/906153,Wheelbase:3665 mm,with STEUERGCOE HINTERACHSE TELLERRAD 210,Trans. type:TG TRONIC PLUS	Propshaft	PS901685
	2009.03-2018.12	AT	-	Van 4WD 651955/651956/651957	For Modelcode:906653,Wheelbase:3665 mm,with STEUERGCOE HINTERACHSE TELLERRAD 210,Trans. type:TG TRONIC PLUS	Propshaft	PS901685
	2009.03-2018.12	AT	-	Chassis Cabin 4WD 651955/651956/651957	For Modelcode:906253/906153,Wheelbase:3665 mm,without STEUERGCOE HINTERACHSE TELLERRAD 210,Trans. type:TG TRONIC PLUS	Propshaft	PS901708
	2009.03-2018.12	AT	-	Van 4WD 651955/651956/651957	For Modelcode:906653,Wheelbase:3665 mm,without STEUERGCOE HINTERACHSE TELLERRAD 210,Trans. type:TG TRONIC PLUS	Propshaft	PS901708
	2009.03-2018.12		Centre	Van RWD 651955/651956/651957		Center Bearing Support	538627
	2009.03-2018.12		Centre	Chassis Cabin RWD 651955/651956/651957		Center Bearing Support	538627
	2009.03-2018.12		Centre	Chassis Cabin 4WD 651955/651956/651957		Center Bearing Support	538627
	2009.03-2018.12		Centre	Van 4WD 651955/651956/651957		Center Bearing Support	538627
	2009.03-2018.12		Centre	Van RWD 651955/651956/651957		Center Bearing Support	538635
	2009.03-2018.12		Centre	Chassis Cabin RWD 651955/651956/651957		Center Bearing Support	538635
	2009.03-2018.12		Centre	Chassis Cabin 4WD 651955/651956/651957		Center Bearing Support	538635
	2009.03-2018.12		Centre	Van 4WD 651955/651956/651957		Center Bearing Support	538635
	2009.03-2018.12		Front	Van RWD 651955/651956/651957		Center Bearing Support Kit	538681S
	2009.03-2018.12		Front	Chassis Cabin RWD 651955/651956/651957		Center Bearing Support Kit	538681S
	2009.03-2018.12		Front	Chassis Cabin 4WD 651955/651956/651957		Center Bearing Support Kit	538681S

	YEAR	TRANSM.	FITTING POSITION	BODY STYLE & DRIVE TYPE & ENGINE	REMARKS	PRODUCT	GSP Ref.
MERCEDES-BENZ							
Sprinter 516D							
2.2 (120 kw)	2009.03-2018.12		Front	Van 4WD 651955/651956/651957		Center Bearing Support Kit	538681S
	2009.03-2018.12		Front	Bus RWD 651955/651956		Center Bearing Support Kit	538681S
	2009.03-2018.12		Centre	Van RWD 651955/651956/651957		Center Bearing Support Kit	538680S
	2009.03-2018.12		Centre	Chassis Cabin RWD 651955/651956/651957		Center Bearing Support Kit	538680S
	2009.03-2018.12		Centre	Chassis Cabin 4WD 651955/651956/651957		Center Bearing Support Kit	538680S
	2009.03-2018.12		Centre	Van 4WD 651955/651956/651957		Center Bearing Support Kit	538680S
	2009.03-2018.12		Centre	Van RWD 651955/651956/651957		Center Bearing Support Kit	538693S
	2009.03-2018.12		Centre	Chassis Cabin RWD 651955/651956/651957		Center Bearing Support Kit	538693S
	2009.03-2018.12		Centre	Chassis Cabin 4WD 651955/651956/651957		Center Bearing Support Kit	538693S
	2009.03-2018.12		Centre	Van 4WD 651955/651956/651957		Center Bearing Support Kit	538693S
	2009.03-2018.12		Front;Rear	Van RWD 651955/651956/651957		Flexible Coupling	533884
	2009.03-2018.12		Front;Rear	Chassis Cabin RWD 651955/651956/651957		Flexible Coupling	533884
	2009.03-2018.12		Front;Rear	Chassis Cabin 4WD 651955/651956/651957		Flexible Coupling	533884
	2009.03-2018.12		Front;Rear	Van 4WD 651955/651956/651957		Flexible Coupling	533884
	2009.03-2018.12		Front;Rear	Bus RWD 651955/651956		Flexible Coupling	533884
	2009.03-2018.12		Front;Rear	Van RWD 651955/651956/651957		Flexible Coupling Kit	537832S
	2009.03-2018.12		Front;Rear	Chassis Cabin RWD 651955/651956/651957		Flexible Coupling Kit	537832S
	2009.03-2018.12		Front;Rear	Chassis Cabin 4WD 651955/651956/651957		Flexible Coupling Kit	537832S
	2009.03-2018.12		Front;Rear	Van 4WD 651955/651956/651957		Flexible Coupling Kit	537832S
	2009.03-2018.12		Front;Rear	Bus RWD 651955/651956		Flexible Coupling Kit	537832S
	2018.02-		Centre	Van RWD 651958		Center Bearing Support	538627
	2018.02-		Centre	Chassis Cabin RWD 651958		Center Bearing Support	538627
	2018.02-		Centre	Van RWD 651958		Center Bearing Support Kit	539925S
	2018.02-		Centre	Chassis Cabin RWD 651958		Center Bearing Support Kit	539925S
	2018.02-		Front;Rear	Van RWD 651958		Flexible Coupling	533884
	2018.02-		Front;Rear	Chassis Cabin RWD 651958		Flexible Coupling	533884
	2019.01-2021.12		Centre	Van 4WD 651958		Center Bearing Support	538627
	2019.01-2021.12		Centre	Chassis Cabin 4WD 651958		Center Bearing Support	538627
	2019.01-2021.12		Centre	Van 4WD 651958		Center Bearing Support Kit	538693S
	2019.01-2021.12		Centre	Chassis Cabin 4WD 651958		Center Bearing Support Kit	538693S
Sprinter 517D							
2.0 (125 kw)	2020.06-		Centre	Van RWD 654920		Center Bearing Support	538627
	2020.06-		Centre	Van RWD 654920		Center Bearing Support Kit	538693S
	2022.01-		Centre	Platform/Chassis RWD OM 654.920		Center Bearing Support	538627
	2022.01-		Centre	Platform/Chassis RWD OM 654.920		Center Bearing Support Kit	538693S
Sprinter 518D							
3.0 (135 kw)	2006.06-2009.12	6MT	Rear	Chassis Cabin RWD 642896/642986/642992/642993	Trans. code:NSG 370	Propshaft	PS900368
	2006.06-2009.12	6MT	Rear	Van RWD 642896/642986/642992/642993	Trans. code:NSG 370	Propshaft	PS900368
	2006.06-2009.12	6MT	Rear	Chassis Cabin RWD 642896/642986/642992/642993	Trans. code:ZF 6S-450	Propshaft	PS900558
	2006.06-2009.12	6MT	Rear	Van RWD 642896/642986/642992/642993	Date to:2010.12,Trans. code:ZF 6S-450	Propshaft	PS900558
	2006.06-2009.12	6MT	Rear	Chassis Cabin 4WD 642896/642986/642992/642993	For Modelcode:906253/906153	Propshaft	PS901857
	2006.06-2009.12	AT	Rear	Chassis Cabin RWD 642896/642986/642992/642993		Propshaft	PS900369
	2006.06-2009.12	AT	Rear	Van RWD 642896/642986/642992/642993		Propshaft	PS900369
	2006.06-2009.12	AT	-	Chassis Cabin 4WD 642896/642986/642992/642993	For Modelcode:906253/906153,Wheelbase:3665 mm,optional:STEUERUNGSE HINTERACHSE TELLERRAD 2/10,Trans. type:7G-TRONIC PLUS	Propshaft	PS901685
	2006.06-2009.12	AT	-	Chassis Cabin 4WD 642896/642986/642992/642993	For Modelcode:906253/906153,Wheelbase:3665 mm,optional:STEUERUNGSE HINTERACHSE TELLERRAD 2/10,Trans. type:7G-TRONIC PLUS	Propshaft	PS901708
	2006.06-2009.12		Centre	Chassis Cabin RWD 642896/642986/642992/642993		Center Bearing Support	538627
	2006.06-2009.12		Centre	Van RWD 642896/642986/642992/642993		Center Bearing Support	538627
	2006.06-2009.12		Centre	Chassis Cabin 4WD 642896/642986/642992/642993		Center Bearing Support	538627
	2006.06-2009.12		Centre	Chassis Cabin RWD 642896/642986/642992/642993		Center Bearing Support	538635
	2006.06-2009.12		Centre	Van RWD 642896/642986/642992/642993		Center Bearing Support	538635
	2006.06-2009.12		Centre	Chassis Cabin 4WD 642896/642986/642992/642993		Center Bearing Support	538635
	2006.06-2009.12		Centre	Chassis Cabin RWD 642896/642986/642992/642993		Center Bearing Support Kit	538680S
	2006.06-2009.12		Centre	Van RWD 642896/642986/642992/642993		Center Bearing Support Kit	538680S
	2006.06-2009.12		Centre	Chassis Cabin 4WD 642896/642986/642992/642993		Center Bearing Support Kit	538680S
	2006.06-2009.12		Centre	Chassis Cabin RWD 642896/642986/642992/642993		Center Bearing Support Kit	538693S
	2006.06-2009.12		Centre	Van RWD 642896/642986/642992/642993		Center Bearing Support Kit	538693S
	2006.06-2009.12		Centre	Chassis Cabin 4WD 642896/642986/642992/642993		Center Bearing Support Kit	538693S
	2006.06-2009.12		Front;Rear	Chassis Cabin RWD 642896/642986/642992/642993		Flexible Coupling	533884
	2006.06-2009.12		Front;Rear	Van RWD 642896/642986/642992/642993		Flexible Coupling	533884
	2006.06-2009.12		Front;Rear	Chassis Cabin 4WD 642896/642986/642992/642993		Flexible Coupling	533884
	2006.06-2009.12		Front;Rear	Chassis Cabin RWD 642896/642986/642992/642993		Flexible Coupling Kit	537832S
	2006.06-2009.12		Front;Rear	Van RWD 642896/642986/642992/642993		Flexible Coupling Kit	537832S
	2006.06-2009.12		Front;Rear	Chassis Cabin 4WD 642896/642986/642992/642993		Flexible Coupling Kit	537832S
	2006.06-2016.12	AT	Front	Van 4WD 642896/642992/642993	For Modelcode:906.655/906.657	Propshaft	PS900632

	YEAR	TRANSM.	FITTING POSITION	BODY STYLE & DRIVE TYPE & ENGINE	REMARKS	PRODUCT	GSP Ref.
MERCEDES-BENZ							
Sprinter 518D							
3.0 (135 kw)	2006.06-2016.12	6MT	Rear	Van 4WD 642896/642992/642993	For Modelcode:906655,Wheelbase:4325 mm;For Modelcode:906657	Propshaft	PS901855
	2006.06-2016.12	AT	-	Van 4WD 642896/642992/642993	For Modelcode:906653,Wheelbase:3665 mm with STEUERCODE HINTERACHSE TELLERRAD 215,Trans. type:722.7ROAC PLUS	Propshaft	PS901685
	2006.06-2016.12	AT	-	Van 4WD 642896/642992/642993	For Modelcode:906653,Wheelbase:3665 mm without STEUERCODE HINTERACHSE TELLERRAD 215,Trans. type:722.7ROAC PLUS	Propshaft	PS901708
	2006.06-2016.12		Centre	Van 4WD 642896/642992/642993		Center Bearing Support	538627
	2006.06-2016.12		Centre	Van 4WD 642896/642992/642993		Center Bearing Support	538635
	2006.06-2016.12		Centre	Van 4WD 642896/642992/642993		Center Bearing Support Kit	538680S
	2006.06-2016.12		Centre	Van 4WD 642896/642992/642993		Center Bearing Support Kit	538693S
	2006.06-2016.12		Front;Rear	Van 4WD 642896/642992/642993		Flexible Coupling	533884
	2006.06-2016.12		Front;Rear	Van 4WD 642896/642992/642993		Flexible Coupling Kit	537832S
Sprinter 519D							
2.0 (140 kw)	2021.10-		Centre	Chassis Cabin 4WD 654920		Center Bearing Support	538627
	2021.10-		Centre	Chassis Cabin RWD 654920		Center Bearing Support	538627
	2021.10-		Centre	Van 4WD 654920		Center Bearing Support	538627
	2021.10-		Centre	Van RWD 654920		Center Bearing Support	538627
	2021.10-		Centre	Chassis Cabin 4WD 654920		Center Bearing Support Kit	538693S
	2021.10-		Centre	Chassis Cabin RWD 654920		Center Bearing Support Kit	538693S
	2021.10-		Centre	Van 4WD 654920		Center Bearing Support Kit	538693S
	2021.10-		Centre	Van RWD 654920		Center Bearing Support Kit	538693S
3.0 (140 kw)	2009.03-2018.12	6MT	Front	Van RWD 642896/642898/642986/642992	Date from:2011.02,Chassis no. from:S 567427,Trans. code:NSG 400	Propshaft	PS901674
	2009.03-2018.12	6MT	Front	Bus RWD 642896	Date from:2011.02,Chassis no. from:S 567427,Trans. code:NSG 400	Propshaft	PS901674
	2009.03-2018.12	AT	Front	Van RWD 642896/642898/642986/642992	Wheelbase:4325 mm	Propshaft	PS901444
	2009.03-2018.12	AT	Front	Chassis Cabin RWD 642896/642898/642986/642992	Wheelbase:4325 mm	Propshaft	PS901444
	2009.03-2018.12	AT	Front	Bus RWD 642896	Wheelbase:4325 mm	Propshaft	PS901444
	2009.03-2018.12	6MT	Rear	Van RWD 642896/642898/642986/642992	Trans. code:NSG 370;for OE No.:A9064102116	Propshaft	PS900368
	2009.03-2018.12	6MT	Rear	Chassis Cabin RWD 642896/642898/642986/642992	Trans. code:NSG 370;for OE No.:A9064102116	Propshaft	PS900368
	2009.03-2018.12	6MT	Rear	Van RWD 642896/642898/642986/642992	Trans. code:ZF 6S-450	Propshaft	PS900558
	2009.03-2018.12	6MT	Rear	Chassis Cabin RWD 642896/642898/642986/642992	Trans. code:ZF 6S-450	Propshaft	PS900558
	2009.03-2018.12	6MT	Rear	Bus RWD 642896	Trans.code:ZF 6S-450	Propshaft	PS900558
	2009.03-2018.12	6MT	Rear	Bus RWD 642896	Date from:2011.02,Chassis no. from:S 567427/E 056829,Trans. code:NSG 370	Propshaft	PS901367
	2009.03-2018.12	6MT	Rear	Van 4WD 642896/642898/642986/642992	For Modelcode:906655,Wheelbase:4325 mm	Propshaft	PS901855
	2009.03-2018.12	6MT	Rear	Van 4WD 642896/642898/642986/642992	For Modelcode:906653	Propshaft	PS901857
	2009.03-2018.12	AT	Rear	Van RWD 642896/642898/642986/642992	Wheelbase:3665 mm	Propshaft	PS900369
	2009.03-2018.12	AT	Rear	Chassis Cabin RWD 642896/642898/642986/642992	Wheelbase:3665 mm	Propshaft	PS900369
	2009.03-2018.12	AT	Rear	Bus RWD 642896	Wheelbase:3665 mm	Propshaft	PS900369
	2009.03-2018.12	AT	Rear	Van RWD 642896/642898/642986/642992	Wheelbase:4325 mm,two parts	Propshaft	PS901369
	2009.03-2018.12	AT	Rear	Chassis Cabin RWD 642896/642898/642986/642992	Wheelbase:4325 mm,two parts	Propshaft	PS901369
	2009.03-2018.12	AT	Rear	Bus RWD 642896	Wheelbase:4325 mm,two parts	Propshaft	PS901369
	2009.03-2018.12	AT	Rear	Van RWD 642896/642898/642986/642992	Wheelbase:4325 mm,three parts	Propshaft	PS901445
	2009.03-2018.12	AT	Rear	Chassis Cabin RWD 642896/642898/642986/642992	Wheelbase:4325 mm,three parts	Propshaft	PS901445
	2009.03-2018.12	AT	Rear	Bus RWD 642896	Wheelbase:4325 mm,three parts	Propshaft	PS901445
	2009.03-2018.12	AT	-	Van 4WD 642896/642898/642986/642992	For Modelcode:906653,Wheelbase:3665 mm with STEUERCODE HINTERACHSE TELLERRAD 215,Trans. type:722.7ROAC PLUS	Propshaft	PS901685
	2009.03-2018.12	AT	-	Chassis Cabin 4WD 642896/642898/642986/642992	For Modelcode:906,906653,Wheelbase:3665 mm with STEUERCODE HINTERACHSE TELLERRAD 215,Trans. type:722.7ROAC PLUS	Propshaft	PS901685
	2009.03-2018.12	AT	-	Van 4WD 642896/642898/642986/642992	For Modelcode:906653,Wheelbase:3665 mm without STEUERCODE HINTERACHSE TELLERRAD 215,Trans. type:722.7ROAC PLUS	Propshaft	PS901708
	2009.03-2018.12	AT	-	Chassis Cabin 4WD 642896/642898/642986/642992	For Modelcode:906,906653,Wheelbase:3665 mm without STEUERCODE HINTERACHSE TELLERRAD 215,Trans. type:722.7ROAC PLUS	Propshaft	PS901708
	2009.03-2018.12		Centre	Van RWD 642896/642898/642986/642992		Center Bearing Support	538627
	2009.03-2018.12		Centre	Chassis Cabin RWD 642896/642898/642986/642992		Center Bearing Support	538627
	2009.03-2018.12		Centre	Van 4WD 642896/642898/642986/642992		Center Bearing Support	538627
	2009.03-2018.12		Centre	Chassis Cabin 4WD 642896/642898/642986/642992		Center Bearing Support	538627
	2009.03-2018.12		Centre	Van RWD 642896/642898/642986/642992		Center Bearing Support	538635
	2009.03-2018.12		Centre	Chassis Cabin RWD 642896/642898/642986/642992		Center Bearing Support	538635
	2009.03-2018.12		Centre	Van 4WD 642896/642898/642986/642992		Center Bearing Support	538635
	2009.03-2018.12		Centre	Chassis Cabin 4WD 642896/642898/642986/642992		Center Bearing Support	538635
	2009.03-2018.12		Centre	Van RWD 642896/642898/642986/642992		Center Bearing Support Kit	538680S
	2009.03-2018.12		Centre	Chassis Cabin RWD 642896/642898/642986/642992		Center Bearing Support Kit	538680S
	2009.03-2018.12		Centre	Van 4WD 642896/642898/642986/642992		Center Bearing Support Kit	538680S
	2009.03-2018.12		Centre	Chassis Cabin 4WD 642896/642898/642986/642992		Center Bearing Support Kit	538680S
	2009.03-2018.12		Centre	Van RWD 642896/642898/642986/642992		Center Bearing Support Kit	538693S
	2009.03-2018.12		Centre	Chassis Cabin RWD 642896/642898/642986/642992		Center Bearing Support Kit	538693S
	2009.03-2018.12		Centre	Van 4WD 642896/642898/642986/642992		Center Bearing Support Kit	538693S
	2009.03-2018.12		Centre	Chassis Cabin 4WD 642896/642898/642986/642992		Center Bearing Support Kit	538693S
	2009.03-2018.12		Front;Rear	Van RWD 642896/642898/642986/642992		Flexible Coupling	533884
	2009.03-2018.12		Front;Rear	Chassis Cabin RWD 642896/642898/642986/642992		Flexible Coupling	533884
	2009.03-2018.12		Front;Rear	Van 4WD 642896/642898/642986/642992		Flexible Coupling	533884
	2009.03-2018.12		Front;Rear	Chassis Cabin 4WD 642896/642898/642986/642992		Flexible Coupling	533884

	YEAR	TRANSM.	FITTING POSITION	BODY STYLE & DRIVE TYPE & ENGINE	REMARKS	PRODUCT	GSP Ref.
MERCEDES-BENZ							
Sprinter 519D							
3.0 (140 kw)	2009.03-2018.12		Front;Rear	Bus RWD 642896		Flexible Coupling	533884
	2009.03-2018.12		Front;Rear	Van RWD 642896/642898/642986/642992		Flexible Coupling Kit	537832S
	2009.03-2018.12		Front;Rear	Chassis Cabin RWD 642896/642898/642986/642992		Flexible Coupling Kit	537832S
	2009.03-2018.12		Front;Rear	Van 4WD 642896/642898/642986/642992		Flexible Coupling Kit	537832S
	2009.03-2018.12		Front;Rear	Chassis Cabin 4WD 642896/642898/642986/642992		Flexible Coupling Kit	537832S
	2009.03-2018.12		Front;Rear	Bus RWD 642896		Flexible Coupling Kit	537832S
	2018.02-		Centre	Van RWD 642899		Center Bearing Support	538627
	2018.02-		Centre	Chassis Cabin RWD 642899		Center Bearing Support	538627
	2018.02-		Centre	Van RWD 642899		Center Bearing Support Kit	539925S
	2018.02-		Centre	Chassis Cabin RWD 642899		Center Bearing Support Kit	539925S
	2018.02-		Front;Rear	Van RWD 642899		Flexible Coupling	533884
	2018.02-		Front;Rear	Chassis Cabin RWD 642899		Flexible Coupling	533884
	2019.01-2021.12		Centre	Van 4WD 642899		Center Bearing Support	538627
	2019.01-2021.12		Centre	Chassis Cabin 4WD 642899		Center Bearing Support	538627
	2019.01-2021.12		Centre	Van 4WD 642899		Center Bearing Support Kit	538693S
	2019.01-2021.12		Centre	Chassis Cabin 4WD 642899		Center Bearing Support Kit	538693S
Sprinter 524							
3.5 (190 kw)	2006.06-2016.12	6MT	Front	Van RWD 272979	Date from:2011.02,Chassis no. from:S 567427,Trans. code:NSG 400	Propshaft	PS901674
	2006.06-2016.12	6MT	Rear	Chassis Cabin RWD 272979	Trans. code:NSG 370	Propshaft	PS900368
	2006.06-2016.12	6MT	Rear	Van RWD 272979	Trans. code:NSG 370	Propshaft	PS900368
	2006.06-2016.12	6MT	Rear	Chassis Cabin RWD 272979	Trans. code:ZF 6S-450	Propshaft	PS900558
	2006.06-2016.12	6MT	Rear	Van RWD 272979	Trans. code:ZF 6S-450	Propshaft	PS900558
	2006.06-2016.12	AT	Rear	Chassis Cabin RWD 272979		Propshaft	PS901368
	2006.06-2016.12	AT	Rear	Van RWD 272979		Propshaft	PS901368
	2006.06-2016.12		Centre	Chassis Cabin RWD 272979		Center Bearing Support	538627
	2006.06-2016.12		Centre	Van RWD 272979		Center Bearing Support	538627
	2006.06-2016.12		Centre	Chassis Cabin RWD 272979		Center Bearing Support	538635
	2006.06-2016.12		Centre	Van RWD 272979		Center Bearing Support	538635
	2006.06-2016.12		Centre	Chassis Cabin RWD 272979		Center Bearing Support Kit	538680S
	2006.06-2016.12		Centre	Van RWD 272979		Center Bearing Support Kit	538680S
	2006.06-2016.12		Centre	Chassis Cabin RWD 272979		Center Bearing Support Kit	538693S
	2006.06-2016.12		Centre	Van RWD 272979		Center Bearing Support Kit	538693S
	2006.06-2016.12		Front;Rear	Chassis Cabin RWD 272979		Flexible Coupling	533884
	2006.06-2016.12		Front;Rear	Van RWD 272979		Flexible Coupling	533884
	2006.06-2016.12		Front;Rear	Chassis Cabin RWD 272979		Flexible Coupling Kit	537832S
	2006.06-2016.12		Front;Rear	Van RWD 272979		Flexible Coupling Kit	537832S
Sprinter 616D							
2.7 (115 kw)	2001.04-2006.05		Centre	Platform/Chassis RWD OM 612.981	RWD	Center Bearing Support	539009
	2001.04-2006.05		Centre	Platform/Chassis RWD OM 612.981		Center Bearing Support Kit	538995S
Sprinter Classic 311D							
2.2 (80 kw)	2013.09-		Centre	Van RWD 646701		Center Bearing Support Kit	538693S
Sprinter Classic 313D							
2.2 (100 kw)	2017.01-		Centre	Van RWD 646701		Center Bearing Support Kit	538693S
Sprinter Classic 411D							
2.2 (80 kw)	2013.09-		Centre	Bus RWD 646701		Center Bearing Support Kit	538693S
Sprinter Classic 413D							
2.2 (100 kw)	2017.01-		Centre	Van RWD 646701		Center Bearing Support Kit	538693S
T-Model							
3.5 (205 kw)	2004.08-2006.08		Rear	Estate 4WD M 272.972		Flexible Coupling Kit	537793S
	2004.08-2006.08		Front;Rear	Estate 4WD M 272.972		Flexible Coupling Kit	512673S
	2004.08-2006.08		Front;Rear	Estate 4WD M 272.972		Flexible Coupling Kit	512677S
T-Model E350							
3.5 (200 kw)	2009.11-2011.12		Front;Rear	Estate 4WD M 276.952		Flexible Coupling Kit	512673S
T-Model E400							
3.0 (245 kw)	2017.01-2018.12		Front;Rear	Estate 4WD M 276.823		Flexible Coupling Kit	537630S
V200							
2.2 (100 kw)	2014.03-	7AT	Rear	Bus RWD 651950		Propshaft	PS901466
	2015.04-	7AT	Rear	Bus 4WD 651950	For For Modelcode:447815,Wheelbase:3430 mm	Propshaft	PS901755
	2015.04-	7AT	Rear	Bus 4WD 651950	For Modelcode:447815,Wheelbase:3430 mm	Propshaft	PS901863
	2015.04-	9AT	Rear	Bus 4WD 651950	Modelcode:447815,Wheel base:3430 mm	Propshaft	PS901914
V220							
2.2 (120 kw)	2014.03-	7AT	Rear	Bus RWD 651950		Propshaft	PS901469
	2015.04-	7AT	Rear	Bus 4WD 651950	For For Modelcode:447815,Wheelbase:3430 mm	Propshaft	PS901755
	2015.04-	7AT	Rear	Bus 4WD 651950	For Modelcode:447815,Wheelbase:3430 mm	Propshaft	PS901863

	YEAR	TRANSM.	FITTING POSITION	BODY STYLE & DRIVE TYPE & ENGINE	REMARKS	PRODUCT	GSP Ref.
MERCEDES-BENZ							
V220							
2.2 (120 kw)	2015.04-	9AT	Rear	Bus 4WD 651950	Modelcode:447815,Wheel base:3430 mm	Propshaft	PS901914
V250							
2.2 (140 kw)	2014.12-	7AT	Rear	Bus 4WD 651950	For For Modelcode:447815,Wheelbase:3430 mm	Propshaft	PS901755
	2014.12-	7AT	Rear	Bus 4WD 651950	For Modelcode:447815,Wheelbase:3430 mm	Propshaft	PS901863
	2014.12-	9AT	Rear	Bus 4WD 651950	Modelcode:447815,Wheel base:3430 mm	Propshaft	PS901914
V260							
2.0 (155 kw)	2014.03-	AT	Rear	Bus RWD M 274.920	For Modelcode:447.813	Propshaft	PS901467
Viano							
2.2 (80 kw)	2003.08-2011.12	6MT	Rear	Bus RWD 646982	Model year from:2012,Chassis no. from:339938,For Engine Code:OM 646 DE 22 LA,Trans. code:NSG 370	Propshaft	PS900378
	2003.08-2011.12	6MT	Rear	Bus RWD 646982	Date to:2011.12,For Engine Code:OM 646 DE 22 LA/OM 611 DE 22 LA,Trans. code:NSG 370	Propshaft	PS900379
	2003.08-2011.12	AT	Rear	Bus RWD 646982	Date from:2007.04,Chassis no. from:339938,For Engine Code:OM 646 DE 22 LA	Propshaft	PS900380
	2003.08-2011.12	AT	Rear	Bus RWD 646982	Date from:2007.04,Chassis no. from:340129,For Engine Code:OM 611 DE 22 LA/OM 646 DE 22 LA	Propshaft	PS900381
	2003.08-2011.12		Front	Bus RWD 646982		Center Bearing Support	538649
	2003.08-2011.12		Rear	Bus RWD 646982		Center Bearing Support	538657
	2003.08-2011.12		Front	Bus RWD 646982		Center Bearing Support Kit	538681S
	2003.08-2011.12		Rear	Bus RWD 646982	Height:69mm	Center Bearing Support Kit	538688S
	2003.08-2011.12		Rear	Bus RWD 646982	Height:65.5mm	Center Bearing Support Kit	539916S
	2003.08-2011.12		Front;Rear	Bus RWD 646982		Flexible Coupling	533884
	2003.08-2011.12		Front;Rear	Bus RWD 646982		Flexible Coupling Kit	537832S
	2003.08-2012.12	6MT	Rear	Bus 4WD 646982	Date to:2012.12,For Engine Code:OM 646 DE 22 LA/OM 611 DE 22 LA,Trans. code:NSG 370;for OE No.:A6394103306	Propshaft	PS900379
	2003.08-2012.12	AT	Rear	Bus 4WD 646982	Wheelbase:3200 mm	Propshaft	PS900388
	2003.08-2012.12	MT	Rear	Bus 4WD 646982	Wheelbase:3200 mm;for OE No.:A6394104606	Propshaft	PS900386
	2003.08-2012.12		Front	Bus 4WD 646982		Center Bearing Support	538649
	2003.08-2012.12		Rear	Bus 4WD 646982		Center Bearing Support	538657
	2003.08-2012.12		Front	Bus 4WD 646982		Center Bearing Support Kit	538681S
	2003.08-2012.12		Rear	Bus 4WD 646982		Center Bearing Support Kit	538688S
	2003.08-2012.12		Front;Rear	Bus 4WD 646982		Flexible Coupling	533884
	2003.08-2012.12		Front;Rear	Bus 4WD 646982		Flexible Coupling Kit	537832S
2.2 (85 kw)	2005.08-	AT	Rear	Bus RWD 646982	Date from:2007.04,Chassis no. from:339938,For Engine Code:OM 646 DE 22 LA	Propshaft	PS900380
	2005.08-	AT	Rear	Bus RWD 646982	Date from:2007.04,Chassis no. from:340129,For Engine Code:OM 611 DE 22 LA/OM 646 DE 22 LA	Propshaft	PS900381
	2005.08-		Front	Bus RWD 646982		Center Bearing Support	538649
	2005.08-		Rear	Bus 4WD 646982		Center Bearing Support	538657
	2005.08-		Rear	Bus RWD 646982		Center Bearing Support	538657
	2005.08-		Front	Bus 4WD 646982		Center Bearing Support Kit	538681S
	2005.08-		Front	Bus RWD 646982		Center Bearing Support Kit	538681S
	2005.08-		Rear	Bus 4WD 646982		Center Bearing Support Kit	538688S
	2005.08-		Rear	Bus RWD 646982	Height:69mm	Center Bearing Support Kit	538688S
	2005.08-		Rear	Bus RWD 646982	Height:65.5mm	Center Bearing Support Kit	539916S
	2005.08-		Front;Rear	Bus 4WD 646982	6MT	Flexible Coupling	533884
	2005.08-		Front;Rear	Bus RWD 646982		Flexible Coupling	533884
	2005.08-		Front;Rear	Bus 4WD 646982		Flexible Coupling Kit	537832S
	2005.08-		Front;Rear	Bus RWD 646982		Flexible Coupling Kit	537832S
2.2 (100 kw)	2010.07-	6MT	Rear	Bus 4WD 651940	For Engine Code:OM 646 DE 22 LA/OM 611 DE 22 LA,Trans. code:NSG 370;for OE No.:A6394103306	Propshaft	PS900379
	2010.07-	6MT	Rear	Bus RWD 651940	For Engine Code:OM 646 DE 22 LA/OM 611 DE 22 LA,Trans. code:NSG 370;for OE No.:A6394103306	Propshaft	PS900379
	2010.07-	AT	Rear	Bus 4WD 651940	Wheelbase:3200 mm;for OE No.:A6394103906	Propshaft	PS900384
	2010.07-	AT	Rear	Bus RWD 651940	Modelcode:639815,Wheel base:3430 mm	Propshaft	PS901749
	2010.07-	MT	Rear	Bus RWD 651940	for OE No.:6394103416	Propshaft	PS900393
	2010.07-		Front	Bus 4WD 651940		Center Bearing Support	538649
	2010.07-		Front	Bus RWD 651940		Center Bearing Support	538649
	2010.07-		Rear	Bus 4WD 651940		Center Bearing Support	538657
	2010.07-		Rear	Bus RWD 651940		Center Bearing Support	538657
	2010.07-		Front	Bus 4WD 651940		Center Bearing Support Kit	538681S
	2010.07-		Front	Bus RWD 651940		Center Bearing Support Kit	538681S
	2010.07-		Rear	Bus 4WD 651940		Center Bearing Support Kit	538688S
	2010.07-		Rear	Bus RWD 651940	Height:69mm	Center Bearing Support Kit	538688S
	2010.07-		Rear	Bus RWD 651940	Height:65.5mm	Center Bearing Support Kit	539916S
	2010.07-		Front;Rear	Bus 4WD 651940		Flexible Coupling	533884
	2010.07-		Front;Rear	Bus RWD 651940		Flexible Coupling	533884
	2010.07-		Front;Rear	Bus 4WD 651940		Flexible Coupling Kit	537832S
	2010.07-		Front;Rear	Bus RWD 651940		Flexible Coupling Kit	537832S
2.2 (110 kw)	2003.09-	6MT	Rear	Bus RWD 646980/646982	Date from:2007.04,Chassis no. from:339938,For Engine code:OM 646 DE 22 LA,Trans. code:NSG 370;for OE No.:A6394103306	Propshaft	PS900378
	2003.09-	6MT	Rear	Bus RWD 646980/646982	For Engine Code:OM 646 DE 22 LA/OM 611 DE 22 LA,Trans. code:NSG 370;for OE No.:A6394103306	Propshaft	PS900379
	2003.09-	AT	Rear	Bus RWD 646980/646982	Date from:2007.04,Chassis no. from:339938,For Engine Code:OM 646 DE 22 LA	Propshaft	PS900380
	2003.09-	AT	Rear	Bus RWD 646980/646982	Date from:2007.04,Chassis no. from:340129,For Engine Code:OM 611 DE 22 LA/OM 646 DE 22 LA	Propshaft	PS900381

	YEAR	TRANSM.	FITTING POSITION	BODY STYLE & DRIVE TYPE & ENGINE	REMARKS	PRODUCT	GSP Ref.
MERCEDES-BENZ **Viano**							
2.2 (110 kw)	2003.09-		Front	Bus RWD 646980/646982		Center Bearing Support	538649
	2003.09-		Rear	Bus RWD 646980/646982		Center Bearing Support	538657
	2003.09-		Front	Bus RWD 646980/646982		Center Bearing Support Kit	538681S
	2003.09-		Rear	Bus RWD 646980/646982	Height:69mm	Center Bearing Support Kit	538688S
	2003.09-		Rear	Bus RWD 646980/646982	Height:65.5mm	Center Bearing Support Kit	539916S
	2003.09-		Front;Rear	Bus RWD 646980/646982		Flexible Coupling	533884
	2003.09-		Front;Rear	Bus RWD 646980/646982		Flexible Coupling Kit	537832S
	2006.03-	6MT	Rear	Bus 4WD 646982	Date from:2006.03;For Engine Code:OM 646 DE 22 LA;OM 646 DE 22 LA;Trans. code:NB3 375;for OE No.:A6394103906	Propshaft	PS900379
	2006.03-	AT	Rear	Bus 4WD 646982	Wheelbase:3200 mm	Propshaft	PS900388
	2006.03-	AT	Rear	Bus 4WD 646982	Wheelbase:3430 mm	Propshaft	PS900389
	2006.03-	MT	Rear	Bus 4WD 646982	Wheelbase:3200 mm;for OE No.:A6394104606	Propshaft	PS900386
	2006.03-		Front	Bus 4WD 646982		Center Bearing Support	538649
	2006.03-		Rear	Bus 4WD 646982		Center Bearing Support	538657
	2006.03-		Front	Bus 4WD 646982		Center Bearing Support Kit	538681S
	2006.03-		Rear	Bus 4WD 646982		Center Bearing Support Kit	538688S
	2006.03-		Front;Rear	Bus 4WD 646982		Flexible Coupling	533884
	2006.03-		Front;Rear	Bus 4WD 646982		Flexible Coupling Kit	537832S
2.2 (120 kw)	2010.07-	AT	Rear	Bus 4WD 651940	Wheelbase:3200 mm	Propshaft	PS900384
	2010.07-	AT	Rear	Bus RWD 651940	Modelcode:639815,Wheel base:3430 mm	Propshaft	PS901749
	2010.07-		Front	Bus 4WD 651940		Center Bearing Support	538649
	2010.07-		Front	Bus RWD 651940		Center Bearing Support	538649
	2010.07-		Rear	Bus 4WD 651940		Center Bearing Support	538657
	2010.07-		Rear	Bus RWD 651940		Center Bearing Support	538657
	2010.07-		Front	Bus 4WD 651940		Center Bearing Support Kit	538681S
	2010.07-		Front	Bus RWD 651940		Center Bearing Support Kit	538681S
	2010.07-		Rear	Bus 4WD 651940		Center Bearing Support Kit	538688S
	2010.07-		Rear	Bus RWD 651940	Height:69mm	Center Bearing Support Kit	538688S
	2010.07-		Rear	Bus RWD 651940	Height:65.5mm	Center Bearing Support Kit	539916S
	2010.07-		Front;Rear	Bus 4WD 651940		Flexible Coupling	533884
	2010.07-		Front;Rear	Bus RWD 651940		Flexible Coupling	533884
	2010.07-		Front;Rear	Bus 4WD 651940		Flexible Coupling Kit	537832S
	2010.07-		Front;Rear	Bus RWD 651940		Flexible Coupling Kit	537832S
3.0 (150 kw)	2005.08-		Rear	Bus RWD 642990	for OE No.:A6394107006	Propshaft	PS900390
	2005.08-	5AT/6MT	Rear	Bus RWD 642990	Model year to:2013;for OE No.:A6394103606	Propshaft	PS900382
	2005.08-		Front	Bus RWD 642990		Center Bearing Support	538649
	2005.08-		Rear	Bus RWD 642990		Center Bearing Support	538657
	2005.08-		Front	Bus RWD 642990		Center Bearing Support Kit	538681S
	2005.08-		Rear	Bus RWD 642990		Center Bearing Support Kit	538688S
	2005.08-		Front;Rear	Bus RWD 642990		Flexible Coupling	533884
	2005.08-		Front;Rear	Bus RWD 642990		Flexible Coupling Kit	537832S
3.0 (165 kw)	2010.07-		Front	Bus RWD 642890		Center Bearing Support	538649
	2010.07-		Rear	Bus RWD 642890		Center Bearing Support	538657
	2010.07-		Front	Bus RWD 642890		Center Bearing Support Kit	538681S
	2010.07-		Front;Rear	Bus RWD 642890		Flexible Coupling	533884
	2010.07-		Front;Rear	Bus RWD 642890		Flexible Coupling Kit	537832S
3.2 (140 kw)	2003.08-2012.12	AT	Rear	Bus RWD 112951	Wheelbase:3200 mm	Propshaft	PS900382
	2003.08-2012.12	AT	Rear	Bus RWD 112951	Wheelbase:3430 mm	Propshaft	PS900383
	2003.08-2012.12	AT	-	Bus RWD 112951	Model year from:2006,Model year to:2010	Joint,propshaft	602077
	2003.08-2012.12		Front	Bus RWD 112951		Center Bearing Support	538649
	2003.08-2012.12		Rear	Bus RWD 112951		Center Bearing Support	538657
	2003.08-2012.12		Front	Bus RWD 112951		Center Bearing Support Kit	538681S
	2003.08-2012.12		Rear	Bus RWD 112951	Height:69mm	Center Bearing Support Kit	538688S
	2003.08-2012.12		Rear	Bus RWD 112951	Height:65.5mm	Center Bearing Support Kit	539916S
	2003.08-2012.12		Front;Rear	Bus RWD 112951		Flexible Coupling	533884
	2003.08-2012.12		Front;Rear	Bus RWD 112951		Flexible Coupling Kit	537832S
3.2 (160 kw)	2003.08-2011.12	5AT	Rear	Bus RWD 112951	Date to:2005.12;Wheelbase:3200 mm	Propshaft	PS900382
	2003.08-2011.12	AT	Rear	Bus RWD 112951	Date to:2005.12;Wheelbase:3430 mm	Propshaft	PS900383
	2003.08-2011.12		Front	Bus RWD 112951		Center Bearing Support	538649
	2003.08-2011.12		Rear	Bus RWD 112951		Center Bearing Support	538657
	2003.08-2011.12		Front	Bus RWD 112951		Center Bearing Support Kit	538681S
	2003.08-2011.12		Rear	Bus RWD 112951	Height:69mm	Center Bearing Support Kit	538688S
	2003.08-2011.12		Rear	Bus RWD 112951	Height:65.5mm	Center Bearing Support Kit	539916S
	2003.08-2011.12		Front;Rear	Bus RWD 112951		Flexible Coupling	533884
	2003.08-2011.12		Front;Rear	Bus RWD 112951		Flexible Coupling Kit	537832S

	YEAR	TRANSM.	FITTING POSITION	BODY STYLE & DRIVE TYPE & ENGINE	REMARKS	PRODUCT	GSP Ref.
MERCEDES-BENZ							
Viano							
3.5 (190 kw)	2007.08-	5AT	Rear	Bus RWD 272978	Model year to:2013;for OE No.:A6394103606	Propshaft	PS900382
	2007.08-	AT	Rear	Bus RWD 272978	for OE No.:A6394104706	Propshaft	PS900387
	2007.08-	AT	-	Bus RWD 272978	Model year from:2010,Model year to:2013	Joint,propshaft	602077
	2007.08-		Front	Bus RWD 272978		Center Bearing Support Kit	538681S
3.7 (165 kw)	2004.06-2007.07	AT	Rear	Bus RWD 112976	Wheelbase:3430 mm	Propshaft	PS900383
	2004.06-2007.07		Rear	Bus RWD 112976		Center Bearing Support	538657
	2004.06-2007.07		Front	Bus RWD 112976		Center Bearing Support Kit	538681S
	2004.06-2007.07		Rear	Bus RWD 112976		Center Bearing Support Kit	539916S
	2004.06-2007.07		Front;Rear	Bus RWD 112976	6MT	Flexible Coupling	533884
	2004.06-2007.07		Front;Rear	Bus RWD 112976		Flexible Coupling Kit	537832S
3.7 (170 kw)	2004.06-2009.07	5AT	Rear	Bus RWD 112976	Model year to:2013	Propshaft	PS900382
	2004.06-2009.07		Front	Bus RWD 112976		Center Bearing Support	538649
	2004.06-2009.07		Rear	Bus RWD 112976		Center Bearing Support	538657
	2004.06-2009.07		Front	Bus RWD 112976		Center Bearing Support Kit	538681S
	2004.06-2009.07		Rear	Bus RWD 112976	Height:69mm	Center Bearing Support Kit	538688S
	2004.06-2009.07		Rear	Bus RWD 112976	Height:65.5mm	Center Bearing Support Kit	539916S
	2004.06-2009.07		Front;Rear	Bus RWD 112976		Flexible Coupling	533884
	2004.06-2009.07		Front;Rear	Bus RWD 112976		Flexible Coupling Kit	537832S
Viano/V220							
2.2 (110 kw)	2014.01-		Rear	Bus RWD OM 651.940	For Modelcode:639.815;for OE No.:A6394103516	Propshaft	PS900392
	2014.01-	AT	Rear	Bus RWD OM 651.940	For Modelcode:639.815;for OE No.:A6394107206	Propshaft	PS900391
	2014.01-		Rear	Bus RWD OM 651.940		Center Bearing Support Kit	539916S
Vito 109							
2.2 (65 kw)	2003.08-2006.07	6MT	Rear	Bus RWD 646983	Date to:2006.07,For Engine code:OM 646 DE 22 LA,Trans. code:NSG 250;for OE No.:A6394103006	Propshaft	PS900376
	2003.08-2006.07	6MT	Rear	Van RWD 646983	Date to:2006.07,For Engine code:OM 646 DE 22 LA,Trans. code:NSG 250;for OE No.:A6394103006	Propshaft	PS900376
	2003.08-2006.07	6MT	Rear	Bus RWD 646983	Wheelbase:3430 mm;for OE No.:A6394103106	Propshaft	PS900377
	2003.08-2006.07	6MT	Rear	Van RWD 646983	Wheelbase:3430 mm;for OE No.:A6394103106	Propshaft	PS900377
	2003.08-2006.07	6MT	Rear	Bus RWD 646983	Model year to:2015;for OE No.:A6394104006	Propshaft	PS900385
	2003.08-2006.07		Front	Bus RWD 646983		Center Bearing Support	538649
	2003.08-2006.07		Front	Van RWD 646983		Center Bearing Support	538649
	2003.08-2006.07		Rear	Bus RWD 646983		Center Bearing Support	538657
	2003.08-2006.07		Rear	Van RWD 646983		Center Bearing Support	538657
	2003.08-2006.07		Front	Bus RWD 646983		Center Bearing Support Kit	538681S
	2003.08-2006.07		Front	Van RWD 646983		Center Bearing Support Kit	538681S
	2003.08-2006.07		Rear	Bus RWD 646983		Center Bearing Support Kit	538688S
	2003.08-2006.07		Rear	Van RWD 646983	Height:69mm	Center Bearing Support Kit	538688S
	2003.08-2006.07		Rear	Van RWD 646983	Height:65.5mm	Center Bearing Support Kit	539916S
	2003.08-2006.07		Front;Rear	Bus RWD 646983		Flexible Coupling	533884
	2003.08-2006.07		Front;Rear	Van RWD 646983		Flexible Coupling	533884
	2003.08-2006.07		Front;Rear	Bus RWD 646983		Flexible Coupling Kit	537832S
	2003.08-2006.07		Front;Rear	Van RWD 646983		Flexible Coupling Kit	537832S
2.2 (70 kw)	2006.08-2014.08	6MT	Rear	Bus RWD 646980/646981	Date to:2014.08,For Engine code:OM 646 DE 22 LA,Trans. code:NSG 250	Propshaft	PS900376
	2006.08-2014.08	6MT	Rear	Van RWD 646980/646981	Date to:2014.08,For Engine code:OM 646 DE 22 LA,Trans. code:NSG 250	Propshaft	PS900376
	2006.08-2014.08		Front	Van RWD 646980/646981		Center Bearing Support	538649
	2006.08-2014.08		Rear	Van RWD 646980/646981		Center Bearing Support	538657
	2006.08-2014.08		Front	Bus RWD 646980/646981		Center Bearing Support Kit	538681S
	2006.08-2014.08		Front	Van RWD 646980/646981		Center Bearing Support Kit	538681S
	2006.08-2014.08		Rear	Bus RWD 646980/646981		Center Bearing Support Kit	538688S
	2006.08-2014.08		Rear	Van RWD 646980/646981	Height:69mm	Center Bearing Support Kit	538688S
	2006.08-2014.08		Rear	Van RWD 646980/646981	Height:65.5mm	Center Bearing Support Kit	539916S
	2006.08-2014.08		Front;Rear	Bus RWD 646980/646981		Flexible Coupling	533884
	2006.08-2014.08		Front;Rear	Van RWD 646980/646981		Flexible Coupling	533884
	2006.08-2014.08		Front;Rear	Van RWD 646980/646981		Flexible Coupling Kit	537832S
	2007.09-2014.08		Front	Bus 4WD 646981		Center Bearing Support	538649
	2007.09-2014.08		Rear	Bus 4WD 646981		Center Bearing Support	538657
	2007.09-2014.08		Front	Bus 4WD 646981		Center Bearing Support Kit	538681S
	2007.09-2014.08		Rear	Bus 4WD 646981		Center Bearing Support Kit	538688S
	2007.09-2014.08		Front;Rear	Bus 4WD 646981		Flexible Coupling	533884
	2007.09-2014.08		Front;Rear	Bus 4WD 646981		Flexible Coupling Kit	537832S
Vito 110							
2.2 (70 kw)	2010.09-2014.08	6MT	Rear	Bus RWD 651940	Date to:2014.08,For Engine code:OM 646 DE 22 LA,Trans. code:NSG 250;for OE No.:A6394103006	Propshaft	PS900376
	2010.09-2014.08	6MT	Rear	Van RWD 651940	Date to:2014.08,For Engine code:OM 646 DE 22 LA,Trans. code:NSG 250;for OE No.:A6394103006	Propshaft	PS900376
	2010.09-2014.08	6MT	Rear	Bus RWD 651940	Wheelbase:3430 mm;for OE No.:A6394103106	Propshaft	PS900377
	2010.09-2014.08	6MT	Rear	Van RWD 651940	Wheelbase:3430 mm;for OE No.:A6394103106	Propshaft	PS900377

	YEAR	TRANSM.	FITTING POSITION	BODY STYLE & DRIVE TYPE & ENGINE	REMARKS	PRODUCT	GSP Ref.
MERCEDES-BENZ							
Vito 110							
2.2 (70 kw)	2010.09-2014.08	6MT	Rear	Van RWD 651940	for OE No.:6394103416	Propshaft	PS900393
	2010.09-2014.08	AT	Rear	Bus RWD 651940	wheelbase:3200 mm	Propshaft	PS900567
	2010.09-2014.08	AT	Rear	Van RWD 651940	wheelbase:3200 mm	Propshaft	PS900567
	2010.09-2014.08		Front	Bus RWD 651940		Center Bearing Support	538649
	2010.09-2014.08		Front	Van RWD 651940		Center Bearing Support	538649
	2010.09-2014.08		Rear	Bus RWD 651940		Center Bearing Support	538657
	2010.09-2014.08		Rear	Van RWD 651940		Center Bearing Support	538657
	2010.09-2014.08		Front	Bus RWD 651940		Center Bearing Support Kit	538681S
	2010.09-2014.08		Front	Van RWD 651940		Center Bearing Support Kit	538681S
	2010.09-2014.08		Rear	Bus RWD 651940	Height:69mm	Center Bearing Support Kit	538688S
	2010.09-2014.08		Rear	Van RWD 651940	Height:69mm	Center Bearing Support Kit	538688S
	2010.09-2014.08		Rear	Bus RWD 651940	Height:65.5mm	Center Bearing Support Kit	539916S
	2010.09-2014.08		Rear	Van RWD 651940	Height:65.5mm	Center Bearing Support Kit	539916S
	2010.09-2014.08		Front;Rear	Bus RWD 651940		Flexible Coupling	533884
	2010.09-2014.08		Front;Rear	Van RWD 651940		Flexible Coupling	533884
	2010.09-2014.08		Front;Rear	Bus RWD 651940		Flexible Coupling Kit	537832S
	2010.09-2014.08		Front;Rear	Van RWD 651940		Flexible Coupling Kit	537832S
Vito 111							
2.2 (80 kw)	2003.08-2007.08	6MT	Rear	Bus RWD 646982	Date from:2007.04,Chassis no. from:339938,For Engine code:OM 646 DE 22 LA,Trans. code:NSG 370,for OE No.:A6394103306	Propshaft	PS900378
	2003.08-2007.08	6MT	Rear	Van RWD 646982	Date from:2007.04,Chassis no. from:339938,For Engine code:OM 646 DE 22 LA,Trans. code:NSG 370	Propshaft	PS900378
	2003.08-2007.08	6MT	Rear	Bus RWD 646982	Date to:2007.08,For Engine code:OM 646 DE 22 LA/OM 611 DE 22 LA,Trans. code:NSG 370,for OE No.:A6394103306	Propshaft	PS900379
	2003.08-2007.08	6MT	Rear	Van RWD 646982	Date to:2007.08,For Engine code:OM 646 DE 22 LA/OM 611 DE 22 LA,Trans. code:NSG 370	Propshaft	PS900379
	2003.08-2007.08	6MT	Rear	Bus RWD 646982	for OE No.:A6394104006	Propshaft	PS900385
	2003.08-2007.08	AT	Rear	Bus RWD 646982	Date from:2007.04,Chassis no. from:339938,For Engine code:OM 646 DE 22 LA	Propshaft	PS900380
	2003.08-2007.08	AT	Rear	Van RWD 646982	Date from:2007.04,Chassis no. from:339938,For Engine code:OM 646 DE 22 LA	Propshaft	PS900380
	2003.08-2007.08	AT	Rear	Bus RWD 646982	Date from:2007.04,Chassis no. from:346129,For Engine code:OM 611 DE 22 LA/OM 646 DE 22 LA	Propshaft	PS900381
	2003.08-2007.08	AT	Rear	Van RWD 646982	Date from:2007.04,Chassis no. from:346129,For Engine code:OM 611 DE 22 LA/OM 646 DE 22 LA	Propshaft	PS900381
	2003.08-2007.08		Front	Bus RWD 646982		Center Bearing Support	538649
	2003.08-2007.08		Front	Van RWD 646982		Center Bearing Support	538649
	2003.08-2007.08		Rear	Bus RWD 646982		Center Bearing Support	538657
	2003.08-2007.08		Rear	Van RWD 646982		Center Bearing Support	538657
	2003.08-2007.08		Front	Bus RWD 646982		Center Bearing Support Kit	538681S
	2003.08-2007.08		Front	Van RWD 646982		Center Bearing Support Kit	538681S
	2003.08-2007.08		Rear	Bus RWD 646982	Height:69mm	Center Bearing Support Kit	538688S
	2003.08-2007.08		Rear	Van RWD 646982	Height:69mm	Center Bearing Support Kit	538688S
	2003.08-2007.08		Rear	Bus RWD 646982	Height:65.5mm	Center Bearing Support Kit	539916S
	2003.08-2007.08		Rear	Van RWD 646982	Height:65.5mm	Center Bearing Support Kit	539916S
	2003.08-2007.08		Front;Rear	Bus RWD 646982		Flexible Coupling	533884
	2003.08-2007.08		Front;Rear	Van RWD 646982		Flexible Coupling	533884
	2003.08-2007.08		Front;Rear	Bus RWD 646982		Flexible Coupling Kit	537832S
	2003.08-2007.08		Front;Rear	Van RWD 646982		Flexible Coupling Kit	537832S
	2007.09-2014.08	6MT	Rear	Bus 4WD 646982	Date to:2014.08,For Engine code:OM 646 DE 22 LA/OM 611 DE 22 LA,Trans. code:NSG 370,for OE No.:A6394103306	Propshaft	PS900379
	2007.09-2014.08	6MT	Rear	Van 4WD 646982	Date to:2014.08,For Engine code:OM 646 DE 22 LA/OM 611 DE 22 LA,Trans. code:NSG 370,for OE No.:A6394103306	Propshaft	PS900379
	2007.09-2014.08	AT	Rear	Bus 4WD 646982	Wheelbase:3200 mm	Propshaft	PS900388
	2007.09-2014.08	AT	Rear	Van 4WD 646982	Wheelbase:3200 mm	Propshaft	PS900388
	2007.09-2014.08	AT	Rear	Bus 4WD 646982	Wheelbase:3430 mm	Propshaft	PS900389
	2007.09-2014.08	AT	Rear	Van 4WD 646982	Wheelbase:3430 mm	Propshaft	PS900389
	2007.09-2014.08	MT	Rear	Bus 4WD 646982	Wheelbase:3200 mm;for OE No.:A6394104606	Propshaft	PS900386
	2007.09-2014.08	MT	Rear	Van 4WD 646982	Wheelbase:3200 mm;for OE No.:A6394104606	Propshaft	PS900386
	2007.09-2014.08		Front	Bus 4WD 646982		Center Bearing Support	538649
	2007.09-2014.08		Front	Van 4WD 646982		Center Bearing Support	538649
	2007.09-2014.08		Rear	Bus 4WD 646982		Center Bearing Support	538657
	2007.09-2014.08		Rear	Van 4WD 646982		Center Bearing Support	538657
	2007.09-2014.08		Front	Bus 4WD 646982		Center Bearing Support Kit	538681S
	2007.09-2014.08		Front	Van 4WD 646982		Center Bearing Support Kit	538681S
	2007.09-2014.08		Rear	Bus 4WD 646982		Center Bearing Support Kit	538688S
	2007.09-2014.08		Rear	Van 4WD 646982		Center Bearing Support Kit	538688S
	2007.09-2014.08		Front;Rear	Bus 4WD 646982		Flexible Coupling	533884
	2007.09-2014.08		Front;Rear	Van 4WD 646982		Flexible Coupling	533884
	2007.09-2014.08		Front;Rear	Bus 4WD 646982		Flexible Coupling Kit	537832S
	2007.09-2014.08		Front;Rear	Van 4WD 646982		Flexible Coupling Kit	537832S
2.2 (85 kw)	2006.08-2014.08	AT	Rear	Bus RWD 646980/646982	Date to:2014.08,Chassis no. from:339938,For Engine code:OM 646 DE 22 LA	Propshaft	PS900380
	2006.08-2014.08		Front	Bus RWD 646980/646982		Center Bearing Support	538649
	2006.08-2014.08		Rear	Bus RWD 646980/646982		Center Bearing Support	538657

	YEAR	TRANSM.	FITTING POSITION	BODY STYLE & DRIVE TYPE & ENGINE	REMARKS	PRODUCT	GSP Ref.
MERCEDES-BENZ							
Vito 111							
2.2 (85 kw)	2006.08-2014.08		Front	Bus RWD 646980/646982		Center Bearing Support Kit	538681S
	2006.08-2014.08		Rear	Bus RWD 646980/646982	Height:69mm	Center Bearing Support Kit	538688S
	2006.08-2014.08		Rear	Bus RWD 646980/646982	Height:65.5mm	Center Bearing Support Kit	539916S
	2006.08-2014.08		Front;Rear	Bus RWD 646980/646982		Flexible Coupling	533884
	2006.08-2014.08		Front;Rear	Bus RWD 646980/646982		Flexible Coupling Kit	537832S
	2007.09-2014.08	6MT	Rear	Van RWD 646980/646982	Date to:2014.08,For Engine code:OM 646 DE 22 LA/OM 611 DE 22 LA,Trans. code:NSG 370	Propshaft	PS900378
	2007.09-2014.08	AT	Rear	Van RWD 646980/646982	Date to:2014.08,For Engine code:OM 646 DE 22 LA	Propshaft	PS900380
	2007.09-2014.08	AT	Rear	Van RWD 646980/646982	Date to:2014.08,Chassis no. from:340129,For Engine code:OM 611 DE 22 LA/OM 646 DE 22 LA	Propshaft	PS900381
	2007.09-2014.08		Front	Van RWD 646980/646982		Center Bearing Support	538649
	2007.09-2014.08		Rear	Van RWD 646980/646982		Center Bearing Support	538657
	2007.09-2014.08		Front	Van RWD 646980/646982		Center Bearing Support Kit	538681S
	2007.09-2014.08		Rear	Van RWD 646980/646982	Height:69mm	Center Bearing Support Kit	538688S
	2007.09-2014.08		Rear	Van RWD 646980/646982	Height:65.5mm	Center Bearing Support Kit	539916S
	2007.09-2014.08		Front;Rear	Van RWD 646980/646982		Flexible Coupling	533884
	2007.09-2014.08		Front;Rear	Van RWD 646980/646982		Flexible Coupling Kit	537832S
Vito 113							
2.2 (100 kw)	2010.09-2014.08	AT	Rear	Van RWD 651940	Date to:2014.08,For Engine code:OM 646 DE 22 LA,for OE No.:A6394103406	Propshaft	PS900380
	2010.09-2014.08	AT	Rear	Bus 4WD 651940	Wheelbase:3200 mm	Propshaft	PS900384
	2010.09-2014.08	AT	Rear	Van 4WD 651940	Wheelbase:3200 mm	Propshaft	PS900384
	2010.09-2014.08	AT	Rear	Bus 4WD 651940	For Modelcode:639.705;Wheelbase:3430 mm;for OE No.:A6394107206	Propshaft	PS900391
	2010.09-2014.08	AT	Rear	Van 4WD 651940	For Modelcode:639.605;Wheelbase:3430 mm;for OE No.:A6394107206	Propshaft	PS900391
	2010.09-2014.08	AT	Rear	Bus 4WD 651940	For Modelcode:639.705;Wheelbase:3430 mm;for OE No.:A6394103516	Propshaft	PS900392
	2010.09-2014.08	AT	Rear	Van 4WD 651940	For Modelcode:639.605;Wheelbase:3430 mm;for OE No.:A6394103516	Propshaft	PS900392
	2010.09-2014.08	AT	Rear	Bus RWD 651940	wheelbase:3200 mm	Propshaft	PS900567
	2010.09-2014.08	AT	Rear	Van RWD 651940	Wheelbase:3200 mm;for OE No.:A6394104606	Propshaft	PS900567
	2010.09-2014.08	AT	Rear	Bus RWD 651940	Modelcode:639705,Wheel base:3430 mm	Propshaft	PS901749
	2010.09-2014.08	MT	Rear	Van RWD 651940		Propshaft	PS900393
	2010.09-2014.08		Front	Bus RWD 651940		Center Bearing Support	538649
	2010.09-2014.08		Front	Van RWD 651940		Center Bearing Support	538649
	2010.09-2014.08		Front	Bus 4WD 651940		Center Bearing Support	538649
	2010.09-2014.08		Rear	Bus RWD 651940		Center Bearing Support	538657
	2010.09-2014.08		Rear	Van RWD 651940		Center Bearing Support	538657
	2010.09-2014.08		Rear	Bus 4WD 651940		Center Bearing Support	538657
	2010.09-2014.08		Rear	Van 4WD 651940		Center Bearing Support	538657
	2010.09-2014.08		Front	Bus RWD 651940		Center Bearing Support Kit	538681S
	2010.09-2014.08		Front	Van RWD 651940		Center Bearing Support Kit	538681S
	2010.09-2014.08		Front	Bus 4WD 651940		Center Bearing Support Kit	538681S
	2010.09-2014.08		Front	Van 4WD 651940		Center Bearing Support Kit	538681S
	2010.09-2014.08		Rear	Bus RWD 651940	Height:69mm	Center Bearing Support Kit	538688S
	2010.09-2014.08		Rear	Van RWD 651940	Height:69mm	Center Bearing Support Kit	538688S
	2010.09-2014.08		Rear	Bus 4WD 651940		Center Bearing Support Kit	538688S
	2010.09-2014.08		Rear	Van 4WD 651940		Center Bearing Support Kit	538688S
	2010.09-2014.08		Rear	Bus RWD 651940	Height:65.5mm	Center Bearing Support Kit	539916S
	2010.09-2014.08		Rear	Van RWD 651940	Height:65.5mm	Center Bearing Support Kit	539916S
	2010.09-2014.08		Front;Rear	Bus RWD 651940		Flexible Coupling	533884
	2010.09-2014.08		Front;Rear	Van RWD 651940		Flexible Coupling	533884
	2010.09-2014.08		Front;Rear	Bus 4WD 651940		Flexible Coupling	533884
	2010.09-2014.08		Front;Rear	Van 4WD 651940		Flexible Coupling	533884
	2010.09-2014.08		Front;Rear	Bus RWD 651940		Flexible Coupling Kit	537832S
	2010.09-2014.08		Front;Rear	Van RWD 651940		Flexible Coupling Kit	537832S
	2010.09-2014.08		Front;Rear	Bus 4WD 651940		Flexible Coupling Kit	537832S
	2010.09-2014.08		Front;Rear	Van 4WD 651940		Flexible Coupling Kit	537832S
Vito 114							
2.0 (100 kw)	2019.03-	7AT	Rear	Van 4WD 654920	For Modelcode:447703,Wheelbase:3200 mm;For Modelcode:447701/447603	Propshaft	PS901848
	2019.03-	9AT	Rear	Van 4WD 654920	Modelcode:447605/447705,Wheelbase:3430 mm,7G-Tronic Plus,Permanent all-wheel drive	Propshaft	PS901715
	2019.03-	9AT	Rear	Van 4WD 654920	Modelcode:447605/447705,Wheelbase:3430 mm,7G-Tronic Plus,Not for Permanent all-wheel drive	Propshaft	PS901755
2.2 (100 kw)	2015.07-	6MT	Rear	Van 4WD 651950	Modelcode:447601/447603/447701,Wheelbase:3200 mm	Propshaft	PS901468
	2015.07-	7AT	Rear	Van 4WD 651950	Modelcode:447605/447705,Wheelbase:3430 mm,7G-Tronic Plus,Permanent all-wheel drive	Propshaft	PS901715
	2015.07-	7AT	Rear	Van 4WD 651950	Modelcode:447605/447705,Wheelbase:3430 mm,7G-Tronic Plus,Not for Permanent all-wheel drive	Propshaft	PS901755
	2015.07-	7AT	Rear	Van 4WD 651950	For Modelcode:447703,Wheelbase:3200 mm;For Modelcode:447701/447603	Propshaft	PS901848
Vito 115							
2.2 (110 kw)	2003.08-2014.08	6MT	Rear	Van RWD 646980/646982	Date from:2007.04,Chassis no. from:339608,For Engine code:OM 646 DE 22 LA,Trans. code:NSG 370	Propshaft	PS900378
	2003.08-2014.08	6MT	Rear	Bus RWD 646980/646982	Date from:2007.04,Chassis no. from:339608,For Engine code:OM 646 DE 22 LA,Trans. code:NSG 370	Propshaft	PS900378
	2003.08-2014.08	6MT	Rear	Bus RWD 646980/646982	Date to:2014.08,For Engine code:OM 646 DE 22 LA/OM 611 DE 22 LA,Trans. code:NSG 370	Propshaft	PS900379

	YEAR	TRANSM.	FITTING POSITION	BODY STYLE & DRIVE TYPE & ENGINE	REMARKS	PRODUCT	GSP Ref.
MERCEDES-BENZ							
Vito 115							
2.2 (110 kw)	2003.08-2014.08	AT	Rear	Van RWD 646980/646982	Date from:2007.04 to 2014.08,Chassis no. from:339938,For Engine code:OM 646 DE 22 LA	Propshaft	PS900380
	2003.08-2014.08	AT	Rear	Bus RWD 646980/646982	Date from:2007.04,Chassis no. from:339938,For Engine code:OM 646 DE 22 LA	Propshaft	PS900380
	2003.08-2014.08	AT	Rear	Bus RWD 646980/646982	Date from:2007.04,Chassis no. from:346129,For Engine code:OM 611 DE 22 LA/OM 646 DE 22 LA	Propshaft	PS900381
	2003.08-2014.08		Front	Van RWD 646980/646982		Center Bearing Support	538649
	2003.08-2014.08		Front	Bus RWD 646980/646982		Center Bearing Support	538649
	2003.08-2014.08		Rear	Van RWD 646980/646982		Center Bearing Support	538657
	2003.08-2014.08		Rear	Bus RWD 646980/646982		Center Bearing Support	538657
	2003.08-2014.08		Front	Van RWD 646980/646982		Center Bearing Support Kit	538681S
	2003.08-2014.08		Front	Bus RWD 646980/646982		Center Bearing Support Kit	538681S
	2003.08-2014.08		Rear	Van RWD 646980/646982	Height:69mm	Center Bearing Support Kit	538688S
	2003.08-2014.08		Rear	Bus RWD 646980/646982	Height:69mm	Center Bearing Support Kit	538688S
	2003.08-2014.08		Rear	Van RWD 646980/646982	Height:65.5mm	Center Bearing Support Kit	539916S
	2003.08-2014.08		Rear	Bus RWD 646980/646982	Height:65.5mm	Center Bearing Support Kit	539916S
	2003.08-2014.08		Front;Rear	Van RWD 646980/646982		Flexible Coupling	533884
	2003.08-2014.08		Front;Rear	Bus RWD 646980/646982		Flexible Coupling	533884
	2003.08-2014.08		Front;Rear	Van RWD 646980/646982		Flexible Coupling Kit	537832S
	2003.08-2014.08		Front;Rear	Bus RWD 646980/646982		Flexible Coupling Kit	537832S
	2006.07-2014.08	6MT	Rear	Van 4WD 646982	Date to 2014.08,For Engine code:OM 648 DE 22 LA/OM 611 DE 22 LA,Trans. code:N93 370,for OE No.:A6394103306	Propshaft	PS900379
	2006.07-2014.08	AT	Rear	Van 4WD 646982	Wheelbase:3200 mm	Propshaft	PS900388
	2006.07-2014.08	AT	Rear	Van 4WD 646982	Wheelbase:3430 mm	Propshaft	PS900389
	2006.07-2014.08	MT	Rear	Van 4WD 646982	Wheelbase:3200 mm;for OE No.:A6394104606	Propshaft	PS900386
	2006.07-2014.08		Front	Van 4WD 646982		Center Bearing Support	538649
	2006.07-2014.08		Rear	Van 4WD 646982		Center Bearing Support	538657
	2006.07-2014.08		Front	Van 4WD 646982		Center Bearing Support Kit	538681S
	2006.07-2014.08		Rear	Van 4WD 646982		Center Bearing Support Kit	538688S
	2006.07-2014.08		Front;Rear	Van 4WD 646982		Flexible Coupling	533884
	2006.07-2014.08		Front;Rear	Van 4WD 646982		Flexible Coupling Kit	537832S
	2007.09-2014.08	6MT	Rear	Bus 4WD 646982	Date to 2014.08,For Engine code:OM 648 DE 22 LA/OM 611 DE 22 LA,Trans. code:N93 370,for OE No.:A6394103306	Propshaft	PS900379
	2007.09-2014.08	AT	Rear	Bus 4WD 646982	Wheelbase:3200 mm	Propshaft	PS900388
	2007.09-2014.08	AT	Rear	Bus 4WD 646982	Wheelbase:3430 mm	Propshaft	PS900389
	2007.09-2014.08	MT	Rear	Bus 4WD 646982	Wheelbase:3200 mm;for OE No.:A6394104606	Propshaft	PS900386
	2007.09-2014.08		Front	Bus 4WD 646982		Center Bearing Support	538649
	2007.09-2014.08		Rear	Bus 4WD 646982		Center Bearing Support	538657
	2007.09-2014.08		Front	Bus 4WD 646982		Center Bearing Support Kit	538681S
	2007.09-2014.08		Rear	Bus 4WD 646982		Center Bearing Support Kit	538688S
	2007.09-2014.08		Front;Rear	Bus 4WD 646982		Flexible Coupling	533884
	2007.09-2014.08		Front;Rear	Bus 4WD 646982		Flexible Coupling Kit	537832S
	2012.05-2015.02		Rear	Bus RWD OM 651.940		Center Bearing Support Kit	539916S
Vito 116							
2.0 (120 kw)	2019.03-	7AT	Rear	Van 4WD 654920	For Modelcode:447703,Wheelbase:3200 mm;For Modelcode:447701/447803	Propshaft	PS901848
	2019.03-	9AT	Rear	Van 4WD 654920	Modelcode:447605/447705,Wheelbase:3430 mm,7G-Tronic Plus,Permanent all-wheel drive	Propshaft	PS901715
	2019.03-	9AT	Rear	Van 4WD 654920	Modelcode:447605/447705,Wheelbase:3430 mm,7G-Tronic Plus,Not for Permanent all-wheel drive	Propshaft	PS901755
2.2 (120 kw)	2010.09-2014.08	6MT	Rear	Bus RWD 651940	For Modelcode:639.705;Wheelbase:3430 mm;for OE No.:A6394103516	Propshaft	PS900392
	2010.09-2014.08	AT	Rear	Van 4WD 651940	Wheelbase:3200 mm	Propshaft	PS900384
	2010.09-2014.08	AT	Rear	Bus 4WD 651940	Wheelbase:3200 mm	Propshaft	PS900384
	2010.09-2014.08	AT	Rear	Van 4WD 651940	For Modelcode:639.605;Wheelbase:3430 mm;for OE No.:A6394107206	Propshaft	PS900391
	2010.09-2014.08	AT	Rear	Bus 4WD 651940	For Modelcode:639.705;Wheelbase:3430 mm;for OE No.:A6394107206	Propshaft	PS900391
	2010.09-2014.08	AT	Rear	Van 4WD 651940	For Modelcode:639.605;Wheelbase:3430 mm;for OE No.:A6394103516	Propshaft	PS900392
	2010.09-2014.08	AT	Rear	Bus 4WD 651940	For Modelcode:639.705;Wheelbase:3430 mm;for OE No.:A6394103516	Propshaft	PS900392
	2010.09-2014.08	AT	Rear	Bus RWD 651940	wheelbase:3200 mm	Propshaft	PS900567
	2010.09-2014.08	AT	Rear	Van RWD 651940	wheelbase:3200 mm	Propshaft	PS900567
	2010.09-2014.08	AT	Rear	Bus RWD 651940	Modelcode:639705,Wheel base:3430 mm	Propshaft	PS901749
	2010.09-2014.08	MT	Rear	Van RWD 651940		Propshaft	PS900393
	2010.09-2014.08		Front	Bus RWD 651940		Center Bearing Support	538649
	2010.09-2014.08		Front	Van RWD 651940		Center Bearing Support	538649
	2010.09-2014.08		Front	Bus 4WD 651940		Center Bearing Support	538649
	2010.09-2014.08		Rear	Bus RWD 651940		Center Bearing Support	538657
	2010.09-2014.08		Rear	Van RWD 651940		Center Bearing Support	538657
	2010.09-2014.08		Rear	Van 4WD 651940		Center Bearing Support	538657
	2010.09-2014.08		Rear	Bus 4WD 651940		Center Bearing Support	538657
	2010.09-2014.08		Front	Bus RWD 651940		Center Bearing Support Kit	538681S
	2010.09-2014.08		Front	Van RWD 651940		Center Bearing Support Kit	538681S
	2010.09-2014.08		Front	Van 4WD 651940		Center Bearing Support Kit	538681S
	2010.09-2014.08		Front	Bus 4WD 651940		Center Bearing Support Kit	538681S

	YEAR	TRANSM.	FITTING POSITION	BODY STYLE & DRIVE TYPE & ENGINE	REMARKS	PRODUCT	GSP Ref.
MERCEDES-BENZ							
Vito 116							
2.2 (120 kw)	2010.09-2014.08		Rear	Bus RWD 651940	Height:69mm	Center Bearing Support Kit	538688S
	2010.09-2014.08		Rear	Van RWD 651940	Height:69mm	Center Bearing Support Kit	538688S
	2010.09-2014.08		Rear	Van 4WD 651940		Center Bearing Support Kit	538688S
	2010.09-2014.08		Rear	Bus 4WD 651940		Center Bearing Support Kit	538688S
	2010.09-2014.08		Rear	Bus RWD 651940	Height:65.5mm	Center Bearing Support Kit	539916S
	2010.09-2014.08		Rear	Van RWD 651940	Height:65.5mm	Center Bearing Support Kit	539916S
	2010.09-2014.08		Front;Rear	Bus RWD 651940		Flexible Coupling	533884
	2010.09-2014.08		Front;Rear	Van RWD 651940		Flexible Coupling	533884
	2010.09-2014.08		Front;Rear	Van 4WD 651940		Flexible Coupling	533884
	2010.09-2014.08		Front;Rear	Bus 4WD 651940		Flexible Coupling	533884
	2010.09-2014.08		Front;Rear	Bus RWD 651940		Flexible Coupling Kit	537832S
	2010.09-2014.08		Front;Rear	Van RWD 651940		Flexible Coupling Kit	537832S
	2010.09-2014.08		Front;Rear	Van 4WD 651940		Flexible Coupling Kit	537832S
	2010.09-2014.08		Front;Rear	Bus 4WD 651940		Flexible Coupling Kit	537832S
	2015.07-	6MT	Rear	Van 4WD 651950	Modelcode:447601/447603/447701,Wheelbase:3200 mm	Propshaft	PS901468
	2015.07-	7AT	Rear	Van 4WD 651950	Modelcode:447605/447705,Wheelbase:3430 mm,7G-Tronic Plus,Permanent all-wheel drive	Propshaft	PS901715
	2015.07-	7AT	Rear	Van 4WD 651950	Modelcode:447605/447705,Wheelbase:3430 mm,7G-Tronic Plus,Not for Permanent all-wheel drive	Propshaft	PS901755
	2015.07-	7AT	Rear	Van 4WD 651950	For Modelcode:447703,Wheelbase:3200 mm;For Modelcode:447701/447603	Propshaft	PS901848
Vito 119							
2.0 (140 kw)	2019.03-	7AT	Rear	Van 4WD 654920	For Modelcode:447703,Wheelbase:3200 mm;For Modelcode:447701/447603	Propshaft	PS901848
	2019.03-	9AT	Rear	Van 4WD 654920	Modelcode:447605/447705,Wheelbase:3430 mm,7G-Tronic Plus,Permanent all-wheel drive	Propshaft	PS901715
	2019.03-	9AT	Rear	Van 4WD 654920	Modelcode:447605/447705,Wheelbase:3430 mm,7G-Tronic Plus,Not for Permanent all-wheel drive	Propshaft	PS901755
2.2 (140 kw)	2015.07-	6MT	Rear	Van 4WD 651950	Modelcode:447601/447603/447701,Wheelbase:3200 mm	Propshaft	PS901468
	2015.07-	7AT	Rear	Van 4WD 651950	Modelcode:447605/447705,Wheelbase:3430 mm,7G-Tronic Plus,Permanent all-wheel drive	Propshaft	PS901715
	2015.07-	7AT	Rear	Van 4WD 651950	Modelcode:447605/447705,Wheelbase:3430 mm,7G-Tronic Plus,Not for Permanent all-wheel drive	Propshaft	PS901755
	2015.07-	7AT	Rear	Van 4WD 651950	For Modelcode:447703,Wheelbase:3200 mm;For Modelcode:447701/447603	Propshaft	PS901848
3.2 (140 kw)	2003.08-2008.07	AT	Rear	Bus RWD 112951	for OE No.:A6394107206	Propshaft	PS900391
	2003.08-2008.07	AT	Rear	Van RWD 112951	for OE No.:A6394107206	Propshaft	PS900391
	2003.08-2008.07	AT	Rear	Bus RWD 112951	for OE No.:A6394103516	Propshaft	PS900392
	2003.08-2008.07	AT	Rear	Van RWD 112951	for OE No.:A6394103516	Propshaft	PS900392
	2003.08-2008.07	AT	-	Bus RWD 112951	Model year from:2006,Model year to:2010	Joint,propshaft	602077
	2003.08-2008.07		Front	Bus RWD 112951		Center Bearing Support	538649
	2003.08-2008.07		Front	Van RWD 112951		Center Bearing Support	538649
	2003.08-2008.07		Rear	Bus RWD 112951		Center Bearing Support	538657
	2003.08-2008.07		Rear	Van RWD 112951		Center Bearing Support	538657
	2003.08-2008.07		Front	Bus RWD 112951		Center Bearing Support Kit	538681S
	2003.08-2008.07		Front	Van RWD 112951		Center Bearing Support Kit	538681S
	2003.08-2008.07		Rear	Bus RWD 112951	Height:69mm	Center Bearing Support Kit	538688S
	2003.08-2008.07		Rear	Van RWD 112951	Height:69mm	Center Bearing Support Kit	538688S
	2003.08-2008.07		Rear	Bus RWD 112951	Height:65.5mm	Center Bearing Support Kit	539916S
	2003.08-2008.07		Rear	Van RWD 112951	Height:65.5mm	Center Bearing Support Kit	539916S
	2003.08-2008.07		Front;Rear	Bus RWD 112951		Flexible Coupling	533884
	2003.08-2008.07		Front;Rear	Van RWD 112951		Flexible Coupling	533884
	2003.08-2008.07		Front;Rear	Bus RWD 112951		Flexible Coupling Kit	537832S
	2003.08-2008.07		Front;Rear	Van RWD 112951		Flexible Coupling Kit	537832S
Vito 120							
3.0 (150 kw)	2006.03-2014.08	5AT	Rear	Van RWD 642990	for OE No.:A6394108506	Propshaft	PS901358
	2006.03-2014.08	AT	Rear	Bus RWD 642990	For Modelcode:639.705;Wheelbase:3430 mm;for OE No.:A6394107206	Propshaft	PS900391
	2006.03-2014.08	AT	Rear	Van RWD 642990	For Modelcode:639.605;Wheelbase:3430 mm;for OE No.:A6394107206	Propshaft	PS900391
	2006.03-2014.08	AT	Rear	Bus RWD 642990	For Modelcode:639.705;Wheelbase:3430 mm;for OE No.:A6394103516	Propshaft	PS900392
	2006.03-2014.08	AT	Rear	Van RWD 642990	For Modelcode:639.605;Wheelbase:3430 mm;for OE No.:A6394103516	Propshaft	PS900392
	2006.03-2014.08		Front	Bus RWD 642990		Center Bearing Support	538649
	2006.03-2014.08		Front	Van RWD 642990		Center Bearing Support	538649
	2006.03-2014.08		Rear	Bus RWD 642990		Center Bearing Support	538657
	2006.03-2014.08		Rear	Van RWD 642990		Center Bearing Support	538657
	2006.03-2014.08		Front	Bus RWD 642990		Center Bearing Support Kit	538681S
	2006.03-2014.08		Front	Van RWD 642990		Center Bearing Support Kit	538681S
	2006.03-2014.08		Rear	Bus RWD 642990		Center Bearing Support Kit	538688S
	2006.03-2014.08		Rear	Van RWD 642990		Center Bearing Support Kit	538688S
	2006.03-2014.08		Front;Rear	Bus RWD 642990		Flexible Coupling	533884
	2006.03-2014.08		Front;Rear	Van RWD 642990		Flexible Coupling	533884
	2006.03-2014.08		Front;Rear	Bus RWD 642990		Flexible Coupling Kit	537832S
	2006.03-2014.08		Front;Rear	Van RWD 642990		Flexible Coupling Kit	537832S

	YEAR	TRANSM.	FITTING POSITION	BODY STYLE & DRIVE TYPE & ENGINE	REMARKS	PRODUCT	GSP Ref.
MERCEDES-BENZ							
Vito 121							
2.0 (155 kw)	2015.09-	AT	Rear	Van RWD M 274.920	For Modelcode:447.603	Propshaft	PS901467
	2016.01-	AT	Rear	Bus RWD M 274.920	For Modelcode:447.703	Propshaft	PS901467
Vito 122							
3.0 (165 kw)	2010.09-2014.08	5AT	Rear	Bus RWD 642890	for OE No.:A6394108506	Propshaft	PS901358
	2010.09-2014.08	5AT	Rear	Van RWD 642890	for OE No.:A6394108506	Propshaft	PS901358
	2010.09-2014.08	AT	Rear	Bus RWD 642890	For Modelcode:639.705;Wheelbase:3430 mm;for OE No.:A6394107206	Propshaft	PS900391
	2010.09-2014.08	AT	Rear	Van RWD 642890	For Modelcode:639.605;Wheelbase:3430 mm;for OE No.:A6394107206	Propshaft	PS900391
	2010.09-2014.08	AT	Rear	Bus RWD 642890	For Modelcode:639.705;Wheelbase:3430 mm;for OE No.:A6394103516	Propshaft	PS900392
	2010.09-2014.08	AT	Rear	Van RWD 642890	For Modelcode:639.605;Wheelbase:3430 mm;for OE No.:A6394103516	Propshaft	PS900392
	2010.09-2014.08		Front	Bus RWD 642890		Center Bearing Support	538649
	2010.09-2014.08		Front	Van RWD 642890		Center Bearing Support	538649
	2010.09-2014.08		Rear	Bus RWD 642890		Center Bearing Support	538657
	2010.09-2014.08		Rear	Van RWD 642890		Center Bearing Support	538657
	2010.09-2014.08		Front	Bus RWD 642890		Center Bearing Support Kit	538681S
	2010.09-2014.08		Front	Van RWD 642890		Center Bearing Support Kit	538681S
	2010.09-2014.08		Front;Rear	Van RWD 642890		Flexible Coupling	533884
	2010.09-2014.08		Front;Rear	Van RWD 642890		Flexible Coupling Kit	537832S
3.2 (160 kw)	2003.08-2004.09	AT	Rear	Bus RWD 112951	Wheelbase:3430 mm	Propshaft	PS900383
	2003.08-2004.09	AT	Rear	Van RWD 112951	Wheelbase:3430 mm	Propshaft	PS900383
	2003.08-2004.09	AT	Rear	Bus RWD 112951	For Modelcode:639.705;Wheelbase:3430 mm;for OE No.:A6394107206	Propshaft	PS900391
	2003.08-2004.09	AT	Rear	Van RWD 112951	For Modelcode:639.605;Wheelbase:3430 mm;for OE No.:A6394107206	Propshaft	PS900391
	2003.08-2004.09	AT	Rear	Bus RWD 112951	For Modelcode:639.705;Wheelbase:3430 mm;for OE No.:A6394103516	Propshaft	PS900392
	2003.08-2004.09	AT	Rear	Van RWD 112951	For Modelcode:639.605;Wheelbase:3430 mm;for OE No.:A6394103516	Propshaft	PS900392
	2003.08-2004.09		Front	Bus RWD 112951		Center Bearing Support	538649
	2003.08-2004.09		Front	Van RWD 112951		Center Bearing Support	538649
	2003.08-2004.09		Rear	Bus RWD 112951		Center Bearing Support	538657
	2003.08-2004.09		Rear	Van RWD 112951		Center Bearing Support	538657
	2003.08-2004.09		Front	Bus RWD 112951		Center Bearing Support Kit	538681S
	2003.08-2004.09		Front	Van RWD 112951		Center Bearing Support Kit	538681S
	2003.08-2004.09		Rear	Bus RWD 112951	Height:69mm	Center Bearing Support Kit	538688S
	2003.08-2004.09		Rear	Van RWD 112951	Height:69mm	Center Bearing Support Kit	538688S
	2003.08-2004.09		Rear	Bus RWD 112951	Height:65.5mm	Center Bearing Support Kit	539916S
	2003.08-2004.09		Rear	Van RWD 112951	Height:65.5mm	Center Bearing Support Kit	539916S
	2003.08-2004.09		Front;Rear	Bus RWD 112951		Flexible Coupling	533884
	2003.08-2004.09		Front;Rear	Van RWD 112951		Flexible Coupling	533884
	2003.08-2004.09		Front;Rear	Bus RWD 112951		Flexible Coupling Kit	537832S
	2003.08-2004.09		Front;Rear	Van RWD 112951		Flexible Coupling Kit	537832S
Vito 123							
3.7 (165 kw)	2004.06-2008.07		Rear	Bus RWD 112976	For Modelcode:639.705;Wheelbase:3430 mm;for OE No.:A6394103516	Propshaft	PS900392
	2004.06-2008.07	AT	Rear	Bus RWD 112976	Wheelbase:3430 mm	Propshaft	PS900383
	2004.06-2008.07	AT	Rear	Van RWD 112976	Wheelbase:3430 mm	Propshaft	PS900383
	2004.06-2008.07	AT	Rear	Bus RWD 112976	For Modelcode:639.705;Wheelbase:3430 mm;for OE No.:A6394107206	Propshaft	PS900391
	2004.06-2008.07	AT	Rear	Van RWD 112976	For Modelcode:639.605;Wheelbase:3430 mm;for OE No.:A6394107206	Propshaft	PS900391
	2004.06-2008.07	AT	Rear	Van RWD 112976	For Modelcode:639.605;Wheelbase:3430 mm;for OE No.:A6394103516	Propshaft	PS900392
	2004.06-2008.07		Rear	Bus RWD 112976		Center Bearing Support	538657
	2004.06-2008.07		Rear	Van RWD 112976		Center Bearing Support	538657
	2004.06-2008.07		Front	Bus RWD 112976		Center Bearing Support Kit	538681S
	2004.06-2008.07		Front	Van RWD 112976		Center Bearing Support Kit	538681S
	2004.06-2008.07		Rear	Van RWD 112976	Height:69mm	Center Bearing Support Kit	538688S
	2004.06-2008.07		Rear	Bus RWD 112976		Center Bearing Support Kit	539916S
	2004.06-2008.07		Rear	Van RWD 112976	Height:65.5mm	Center Bearing Support Kit	539916S
	2004.06-2008.07		Front;Rear	Bus RWD 112976	6MT	Flexible Coupling	533884
	2004.06-2008.07		Front;Rear	Van RWD 112976		Flexible Coupling	533884
	2004.06-2008.07		Front;Rear	Bus RWD 112976		Flexible Coupling Kit	537832S
	2004.06-2008.07		Front;Rear	Van RWD 112976		Flexible Coupling Kit	537832S
3.7 (170 kw)	2004.06-2008.07	5AT	Rear	Bus RWD 112976	Model year to:2015	Propshaft	PS900385
	2004.06-2008.07		Front	Bus RWD 112976		Center Bearing Support	538649
	2004.06-2008.07		Front	Van RWD 112976		Center Bearing Support	538649
	2004.06-2008.07		Rear	Bus RWD 112976		Center Bearing Support	538657
	2004.06-2008.07		Rear	Van RWD 112976		Center Bearing Support	538657
	2004.06-2008.07		Front	Bus RWD 112976		Center Bearing Support Kit	538681S
	2004.06-2008.07		Front	Van RWD 112976		Center Bearing Support Kit	538681S
	2004.06-2008.07		Rear	Bus RWD 112976		Center Bearing Support Kit	538688S
	2004.06-2008.07		Rear	Van RWD 112976		Center Bearing Support Kit	538688S

	YEAR	TRANSM.	FITTING POSITION	BODY STYLE & DRIVE TYPE & ENGINE	REMARKS	PRODUCT	GSP Ref.
MERCEDES-BENZ							
Vito 123							
3.7 (170 kw)	2004.06-2008.07		Front;Rear	Bus RWD 112976		Flexible Coupling	533884
	2004.06-2008.07		Front;Rear	Van RWD 112976		Flexible Coupling	533884
	2004.06-2008.07		Front;Rear	Bus RWD 112976		Flexible Coupling Kit	537832S
	2004.06-2008.07		Front;Rear	Van RWD 112976		Flexible Coupling Kit	537832S
Vito 124							
2.0 (174 kw)	2021.01-	7AT	Rear	Van 4WD 654920	For Modelcode:447703,Wheelbase:3200 mm;For Modelcode:447701	Propshaft	PS901848
	2021.01-	9AT	Rear	Van 4WD 654920	Modelcode:447703,Wheelbase:3430 mm;TG-Tronic Plus;Permanent all-wheel drive;Permanent all-wheel drive	Propshaft	PS901715
2.0 (176 kw)	2020.04-2020.12	7AT	Rear	Van 4WD 654920	For Modelcode:447703,Wheelbase:3200 mm;For Modelcode:447701	Propshaft	PS901848
	2020.04-2020.12	9AT	Rear	Van 4WD 654920	Modelcode:447703,Wheelbase:3430 mm;TG-Tronic Plus;Permanent all-wheel drive;Permanent all-wheel drive	Propshaft	PS901715
Vito 126							
3.5 (190 kw)	2007.09-2014.08		Rear	Van RWD 272978	for OE No.:A6394104706	Propshaft	PS900387
	2007.09-2014.08		Rear	Van RWD 272978	For Modelcode:639.605;Wheelbase:3430 mm;for OE No.:A6394103516	Propshaft	PS900392
	2007.09-2014.08		Rear	Bus RWD 272978	for OE No.:A6394108506	Propshaft	PS901358
	2007.09-2014.08	AT	Rear	Bus RWD 272978	for OE No.:A6394104706	Propshaft	PS900387
	2007.09-2014.08	AT	Rear	Van RWD 272978	For Modelcode:639.605;Wheelbase:3430 mm;for OE No.:A6394107206	Propshaft	PS900391
	2007.09-2014.08		Front	Bus RWD 272978		Center Bearing Support	538649
	2007.09-2014.08		Front	Van RWD 272978		Center Bearing Support	538649
	2007.09-2014.08		Rear	Bus RWD 272978		Center Bearing Support	538657
	2007.09-2014.08		Rear	Van RWD 272978		Center Bearing Support	538657
	2007.09-2014.08		Front	Bus RWD 272978		Center Bearing Support Kit	538681S
	2007.09-2014.08		Front	Van RWD 272978		Center Bearing Support Kit	538681S
	2007.09-2014.08		Rear	Bus RWD 272978		Center Bearing Support Kit	538688S
	2007.09-2014.08		Rear	Van RWD 272978		Center Bearing Support Kit	538688S
	2007.09-2014.08		Front;Rear	Bus RWD 272978		Flexible Coupling	533884
	2007.09-2014.08		Front;Rear	Van RWD 272978		Flexible Coupling	533884
	2007.09-2014.08		Front;Rear	Bus RWD 272978		Flexible Coupling Kit	537832S
	2007.09-2014.08		Front;Rear	Van RWD 272978		Flexible Coupling Kit	537832S
Vito E-Cell							
ET (60 kw)	2011.01-2014.08		Front	Van FWD 780994		Center Bearing Support Kit	538681S
	2012.03-2014.08		Front	Bus FWD 780994		Center Bearing Support Kit	538681S
Vito Mixto 111							
2.2 (85 kw)	2012.05-2015.02		Rear	Van RWD OM 651.940		Center Bearing Support Kit	539916S
Vito Mixto 115							
2.2 (110 kw)	2012.05-2015.02		Rear	Van RWD OM 651.940		Center Bearing Support Kit	539916S
MERCEDES-BENZ (BBDC)							
C180							
1.6 (115 kw)	2010.07-2012.12		Rear	Saloon RWD M 271.910		Propshaft	PS901658
1.8 (115 kw)	2013.08-2014.12	7AT	Rear	Saloon RWD M 271.820		Propshaft	PS901659
C200							
1.8 (135 kw)	2008.03-2009.12	AT	Rear	Saloon RWD M 271.950	for OE No.:A2044100406	Propshaft	PS901658
E200							
1.8 (120 kw)	2005.11-2006.12	AT	Front	Saloon RWD M 271.941		Propshaft	PS900364
1.8 (135 kw)	2006.09-2012.12	AT	Front	Saloon RWD M 271.956		Propshaft	PS900364
E200L							
1.8 (135 kw)	2011.03-2012.12	MT	Rear	Saloon RWD M 271.860	Date to:2012.06	Propshaft	PS901480
2.0 (135 kw)	2014.06-		Centre	Saloon RWD M 274.920		Center Bearing Support	538668
E260L							
1.8 (150 kw)	2010.06-2014.12	5AT	Rear	Saloon RWD M 271.860	For Model year:2010	Propshaft	PS901479
2.0 (155 kw)	2014.06-		Centre	Saloon RWD M 274.920		Center Bearing Support	538668
E300L							
2.0 (180 kw)	2016.08-	9AT	Rear	Saloon RWD M 274.920		Propshaft	PS901725
E400L							
3.0 (245 kw)	2013.08-2014.12		Centre	Saloon RWD M 276.820	for SA code:804	Center Bearing Support	538668
	2014.06-		Centre	Saloon 4WD M 276.820		Center Bearing Support	538668
GLC200L							
2.0 (135 kw)	2019.01-		Rear	SUV 4WD M 274.920		Propshaft	PS901478
GLC260L							
2.0 (145 kw)	2019.08-		Rear	SUV 4WD M 264.920		Propshaft	PS901478
2.0 (155 kw)	2018.10-		Rear	SUV 4WD M 274.920		Propshaft	PS901478
GLC300L							
2.0 (180 kw)	2018.10-		Rear	SUV 4WD M 274.920		Propshaft	PS901478
2.0 (190 kw)	2019.08-		Rear	SUV 4WD M 264.920		Propshaft	PS901478

	YEAR	TRANSM.	FITTING POSITION	BODY STYLE & DRIVE TYPE & ENGINE	REMARKS	PRODUCT	GSP Ref.
MERCEDES-BENZ (BBDC)							
GLK260							
2.0 (155 kw)	2013.08-2015.12	MT	Rear	SUV 4WD M 274.920		Propshaft	PS901477
MERCEDES-BENZ (FJDA)							
V260							
2.0 (155 kw)	2016.03-	AT	Rear	Bus RWD M 274.920	Model year to:2018	Propshaft	PS901467
Vito							
2.0 (155 kw)	2016.09-	AT	Rear	Bus RWD M 274.920		Propshaft	PS901467
MERCURY							
Milan							
3.0 (165 kw)	2006.09-2009.12	AT	Rear	Saloon 4WD C30PDED	Model year from:2007	Propshaft	PS900241
3.0 (179 kw)	2009.09-2011.12	AT	Rear	Saloon 4WD 99G		Propshaft	PS900241
Montego							
3.0 (151 kw)	2005.09-2007.12	AT	Rear	Saloon 4WD 96S		Propshaft	PS900244
Mountaineer							
4.0 (156 kw)	2001.09-2005.12	AT	Front	SUV 4WD V99E	Model year from:2002	Propshaft	PS900576
4.0 (157 kw)	2001.09-2005.12	AT	Front	SUV 4WD V99E	Model year from:2002	Propshaft	PS900576
	2005.09-2010.12		Front	SUV 4WD V99E		Joint,propshaft	661100
4.6 (178 kw)	2000.10-2005.12	AT	Front	SUV 4WD 99W	Model year from:2002	Propshaft	PS900576
MINI							
Mini Clubman							
2.0 (120 kw)	2015.04-		Front	Estate 4WD B48A20A		Flexible Coupling	510597
	2015.04-		Front	Estate 4WD B47C20A/B47C20B		Flexible Coupling	510597
	2015.04-		Front	Estate 4WD B48A20A		Flexible Coupling Kit	510597S
	2015.04-		Front	Estate 4WD B47C20A/B47C20B		Flexible Coupling Kit	510597S
2.0 (131 kw)	2020.11-		Front	Estate 4WD B48A20F		Flexible Coupling	510597
2.0 (140 kw)	2016.01-		Front	Estate 4WD B47C20A/B47C20B		Flexible Coupling	510597
	2016.01-		Front	Estate 4WD B47C20A/B47C20B		Flexible Coupling Kit	510597S
2.0 (141 kw)	2016.01-		Front	Estate 4WD B48A20A		Flexible Coupling	510597
	2016.01-		Front	Estate 4WD B48A20A		Flexible Coupling Kit	510597S
2.0 (155 kw)	2014.11-		Front	Estate 4WD B48A20A		Flexible Coupling	510597
2.0 (170 kw)	2015.11-2019.06		Front	Estate 4WD B48A20B		Flexible Coupling	510597
2.0 (225 kw)	2019.07-		Front	Estate 4WD B48A20E		Flexible Coupling	510597
Mini Countryman							
1.5 (100 kw)	2016.10-		Centre	Estate 4WD B38A15A/B38A15F		Center Bearing Support	538640
	2016.10-		Front	Estate 4WD B38A15A/B38A15F		Flexible Coupling	510597
	2016.10-		Front	Estate 4WD B38A15A/B38A15F		Flexible Coupling Kit	510597S
1.5 (162 kw)	2020.07-		Front	Estate 4WD B38A15A		Flexible Coupling	510597
	2020.07-		Front	Estate 4WD B38A15A		Flexible Coupling Kit	510597S
1.5 (165 kw)	2017.01-		Front	Estate 4WD B38A15A		Flexible Coupling	510597
	2017.01-		Front	Estate 4WD B38A15A		Flexible Coupling Kit	510597S
1.6 (82 kw)	2010.08-2016.10		Front	Estate 4WD N47C16A		Flexible Coupling	510641
1.6 (90 kw)	2014.11-2016.10		Front	Estate 4WD N16B16A/N18B16A		Flexible Coupling	510641
	2014.11-2016.10		Front	Estate 4WD N16B16A/N18B16A	AT	Flexible Coupling Kit	510641S
1.6 (120 kw)	2010.06-2016.10		Front	Estate 4WD N18B16A		Flexible Coupling	510641
	2010.06-2016.10		Front	Estate 4WD N18B16A	AT	Flexible Coupling Kit	510641S
1.6 (135 kw)	2010.08-2016.10		Front	Estate 4WD N18B16A		Flexible Coupling	510641
	2010.08-2016.10		Front	Estate 4WD N18B16A	AT	Flexible Coupling Kit	510641S
1.6 (140 kw)	2014.07-2016.10		Front	Estate 4WD N18B16A		Flexible Coupling	510641
	2014.07-2016.10		Front	Estate 4WD N18B16A	AT	Flexible Coupling Kit	510641S
1.6 (160 kw)	2012.11-2016.10		Front	Estate 4WD N18B16C		Flexible Coupling	510641
	2012.11-2016.10		Front	Estate 4WD N18B16C	AT	Flexible Coupling Kit	510641S
2.0 (82 kw)	2011.03-2016.09		Front	Estate 4WD N47C20A		Flexible Coupling	510641
	2011.03-2016.09		Front	Estate 4WD N47C20A		Flexible Coupling Kit	510641S
2.0 (100 kw)	2011.03-2016.10		Front	Estate 4WD N47C20A		Flexible Coupling	510641
	2011.03-2016.10		Front	Estate 4WD N47C20A	AT	Flexible Coupling Kit	510641S
	2016.10-		Centre	Estate 4WD B47C20A		Center Bearing Support	538640
	2016.10-		Front	Estate 4WD B47C20A		Flexible Coupling	510597
	2016.10-		Front	Estate 4WD B47C20A		Flexible Coupling Kit	510597S
2.0 (105 kw)	2011.03-2016.09		Front	Estate 4WD N47C20A		Flexible Coupling	510641
	2011.03-2016.09		Front	Estate 4WD N47C20A	AT	Flexible Coupling Kit	510641S
2.0 (110 kw)	2016.10-		Centre	Estate 4WD B47C20A/B47C20B		Center Bearing Support	538640
	2016.10-		Front	Estate 4WD B47C20A/B47C20B		Flexible Coupling	510597
	2016.10-		Front	Estate 4WD B47C20A/B47C20B		Flexible Coupling Kit	510597S
2.0 (120 kw)	2016.10-		Centre	Estate 4WD B46A20A/B48A20A		Center Bearing Support	538640
	2016.10-		Centre	Estate 4WD B47C20A		Center Bearing Support	538640

	YEAR	TRANSM.	FITTING POSITION	BODY STYLE & DRIVE TYPE & ENGINE	REMARKS	PRODUCT	GSP Ref.
MINI							
Mini Countryman							
2.0 (120 kw)	2016.10-		Front	Estate 4WD B46A20A/B48A20A		Flexible Coupling	510597
	2016.10-		Front	Estate 4WD B47C20A		Flexible Coupling	510597
	2016.10-		Front	Estate 4WD B46A20A/B48A20A		Flexible Coupling Kit	510597S
	2016.10-		Front	Estate 4WD B47C20A		Flexible Coupling Kit	510597S
2.0 (131 kw)	2020.07-		Centre	Estate 4WD B46A20A/B48A20A		Center Bearing Support	538640
	2020.07-		Front	Estate 4WD B46A20A/B48A20A		Flexible Coupling	510597
	2020.07-		Front	Estate 4WD B46A20A/B48A20A		Flexible Coupling Kit	510597S
2.0 (140 kw)	2016.10-		Centre	Estate 4WD B47C20A/B47C20B		Center Bearing Support	538640
	2016.10-		Front	Estate 4WD B47C20A/B47C20B		Flexible Coupling	510597
	2016.10-		Front	Estate 4WD B47C20A/B47C20B		Flexible Coupling Kit	510597S
2.0 (141 kw)	2016.10-		Centre	Estate 4WD B46A20A/B48A20A		Center Bearing Support	538640
	2016.10-		Front	Estate 4WD B46A20A/B48A20A		Flexible Coupling	510597
	2016.10-		Front	Estate 4WD B46A20A/B48A20A		Flexible Coupling Kit	510597S
2.0 (160 kw)	2023.11-		Centre	Estate 4WD B48A20P		Center Bearing Support	538640
	2023.11-		Front	Estate 4WD B48A20P		Flexible Coupling	510597
	2023.11-		Front	Estate 4WD B48A20P		Flexible Coupling Kit	510597S
2.0 (170 kw)	2017.01-2019.06		Centre	Estate 4WD B48A20B		Center Bearing Support	538640
	2017.01-2019.06		Front	Estate 4WD B48A20B		Flexible Coupling	510597
	2017.01-2019.06		Front	Estate 4WD B48A20B		Flexible Coupling Kit	510597S
2.0 (221 kw)	2023.11-		Centre	Estate 4WD B48A20H		Center Bearing Support	538640
	2023.11-		Front	Estate 4WD B48A20H		Flexible Coupling	510597
	2023.11-		Front	Estate 4WD B48A20H		Flexible Coupling Kit	510597S
2.0 (225 kw)	2019.07-		Centre	Estate 4WD B48A20E		Center Bearing Support	538640
	2019.07-		Front	Estate 4WD B48A20E		Flexible Coupling	510597
	2019.07-		Front	Estate 4WD B48A20E		Flexible Coupling Kit	510597S
Mini Paceman							
1.6 (82 kw)	2013.01-2016.09		Front	Coupe 4WD N47C16A		Flexible Coupling	510641
	2013.01-2016.09		Front	Coupe 4WD N47C16A	AT	Flexible Coupling Kit	510641S
1.6 (85 kw)	2013.07-2016.09		Front	Coupe 4WD N16B16A		Flexible Coupling	510641
	2013.07-2016.09		Front	Coupe 4WD N16B16A	AT	Flexible Coupling Kit	510641S
1.6 (90 kw)	2013.05-2016.09		Front	Coupe 4WD N16B16A/N18B16A		Flexible Coupling	510641
	2013.05-2016.09		Front	Coupe 4WD N16B16A/N18B16A	AT	Flexible Coupling Kit	510641S
1.6 (120 kw)	2013.07-2016.09		Front	Coupe 4WD N18B16A		Flexible Coupling	510641
	2013.07-2016.09		Front	Coupe 4WD N18B16A	AT	Flexible Coupling Kit	510641S
1.6 (135 kw)	2013.01-2016.09		Front	Coupe 4WD N18B16A		Flexible Coupling	510641
	2013.01-2016.09		Front	Coupe 4WD N18B16A	AT	Flexible Coupling Kit	510641S
1.6 (140 kw)	2014.07-2016.09		Front	Coupe 4WD N18B16A		Flexible Coupling	510641
	2014.07-2016.09		Front	Coupe 4WD N18B16A	AT	Flexible Coupling Kit	510641S
1.6 (160 kw)	2013.01-2016.10		Front	Coupe 4WD N18B16C		Flexible Coupling	510641
	2013.01-2016.10		Front	Coupe 4WD N18B16C	AT	Flexible Coupling Kit	510641S
2.0 (82 kw)	2013.01-2016.09		Front	Coupe 4WD N47C20A		Flexible Coupling	510641
	2013.01-2016.09		Front	Coupe 4WD N47C20A		Flexible Coupling Kit	510641S
2.0 (100 kw)	2012.10-2016.09		Front	Coupe 4WD N47C20A		Flexible Coupling	510641
	2012.10-2016.09		Front	Coupe 4WD N47C20A	AT	Flexible Coupling Kit	510641S
2.0 (105 kw)	2013.01-2016.09		Front	Coupe 4WD N47C20A		Flexible Coupling	510641
	2013.01-2016.09		Front	Coupe 4WD N47C20A	AT	Flexible Coupling Kit	510641S
MITSUBISHI							
3000 GT							
3.0 (165 kw)	1989.06-1999.08		Centre	Coupe 4WD 6G72DOHC		Center Bearing Support	539051
3.0 (210 kw)	1990.01-1999.08		Centre	Coupe 4WD 6G72-T		Center Bearing Support	539051
Airtrek							
2.0 (100 kw)	2003.05-2006.10		Front;Rear	SUV FWD 4G63DOHC		Center Bearing Support	539052
2.0 (177 kw)	2002.03-2006.10		Front	SUV 4WD 4G63DOHC		Center Bearing Support	539054
	2002.03-2006.10		Front;Rear	SUV 4WD 4G63DOHC		Center Bearing Support	539052
ASX							
1.6 (84 kw)	2015.07-	6MT	Rear	SUV 4WD 9HD		Propshaft	PS901676
1.8 (110 kw)	2010.04-	6MT	Rear	SUV 4WD 4N13		Propshaft	PS901676
2.0 (110 kw)	2009.11-		Centre	SUV FWD 4B11/4J11		Center Bearing Support Kit	539907S
2.0 (112 kw)	2010.01-		Centre	SUV 4WD 4B11		Center Bearing Support Kit	539907S
2.2 (110 kw)	2013.04-	6AT	Rear	SUV 4WD 4N14		Propshaft	PS901676
Challenger							
2.0 (95 kw)	2001.10-2005.02		Centre	Closed Off-Road Vehicle 4WD 4G94 (GDI)		Center Bearing Support	538645
2.5 (73 kw)	1998.08-2009.02		Centre	Terrain cab wagon closed 4WD 4D56		Center Bearing Support	538619

	YEAR	TRANSM.	FITTING POSITION	BODY STYLE & DRIVE TYPE & ENGINE	REMARKS	PRODUCT	GSP Ref.
MITSUBISHI							
Challenger							
3.0 (125 kw)	2000.06-2005.12	AT	-	Terrain cab wagon closed 4WD 6G72SOHC	Model year from:2001,Model year to:2003	Joint,propshaft	801302
3.0 (130 kw)	1998.03-2000.10		Centre	Terrain cab wagon closed 4WD 6G72DOHC		Center Bearing Support	538619
Chariot							
1.8 (90 kw)	1991.10-1998.10		Centre	MPV 4WD 4G93		Center Bearing Support	539051
Chariot Grandis							
2.4 (110 kw)	1998.10-2000.07		Centre	MPV 4WD 4G64DOHCB		Center Bearing Support	539077
3.0 (158 kw)	2000.05-2003.05		Centre	MPV 4WD 6G72 (DOHC 24V)		Center Bearing Support	539077
Colt							
1.3 (55 kw)	1991.12-1995.08		Centre	Hatchback FWD 4G13M		Center Bearing Support	539049
	1996.05-2000.09		Centre	Hatchback FWD 4G13M		Center Bearing Support	539049
1.3 (60 kw)	2000.09-2005.07		Centre	Hatchback FWD 4G13S		Center Bearing Support	539049
1.6 (66 kw)	1994.02-1996.04		Centre	Hatchback FWD 4G92		Center Bearing Support	539049
	1996.05-2000.09		Centre	Hatchback FWD 4G92		Center Bearing Support	539049
1.6 (76 kw)	2000.09-2003.09		Centre	Hatchback FWD 4G92		Center Bearing Support	539049
1.6 (83 kw)	1992.04-1996.04		Centre	Hatchback FWD 4G92		Center Bearing Support	539049
1.8 (103 kw)	1991.12-1995.08		Centre	Hatchback FWD 4G93DOHC		Center Bearing Support	539049
Eclipse Cross							
1.5 (110 kw)	2017.10-	CVT	Rear	SUV 4WD 4B40		Propshaft	PS901676
	2017.10-		Centre	SUV 4WD 4B40		Center Bearing Support Kit	539907S
	2017.10-		Centre	SUV FWD 4B40		Center Bearing Support Kit	539907S
1.5 (112 kw)	2017.10-	CVT	Rear	SUV 4WD 4B40		Propshaft	PS901676
	2017.10-		Centre	SUV 4WD 4B40		Center Bearing Support Kit	539907S
	2017.10-		Centre	SUV FWD 4B40		Center Bearing Support Kit	539907S
1.5 (120 kw)	2017.10-	CVT	Rear	SUV 4WD 4B40		Propshaft	PS901676
	2017.10-		Centre	SUV FWD 4B40		Center Bearing Support Kit	539907S
	2017.10-		Centre	SUV 4WD 4B40		Center Bearing Support Kit	539907S
1.5 (121 kw)	2018.10-		Centre	SUV FWD 4B40		Center Bearing Support Kit	539907S
	2018.10-		Centre	SUV 4WD 4B40		Center Bearing Support Kit	539907S
2.0 (110 kw)	2018.05-		Centre	SUV 4WD 4B11		Center Bearing Support Kit	539907S
2.2 (109 kw)	2019.03-	AT	Rear	SUV 4WD 4N14		Propshaft	PS901676
G-Wagon							
2.8 (92 kw)	1997.11-2001.09		Centre	Terrain cab wagon closed 4WD 4M40T		Center Bearing Support	538645
GTO							
3.0 (163 kw)	1996.05-2000.08		Centre	Coupe 4WD 6G72DOHC		Center Bearing Support	539051
3.0 (165 kw)	1989.06-1996.04		Centre	Coupe 4WD 6G72DOHC		Center Bearing Support	539051
3.0 (206 kw)	1996.05-2000.09		Centre	Coupe 4WD 6G72DOHCT		Center Bearing Support	539051
3.0 (210 kw)	1994.01-2000.12		Centre	Coupe 4WD 6G72 (DOHC 24V), 6G72-T		Center Bearing Support	539051
I.O							
1.8 (88 kw)	1999.06-2005.02	AT	Front	Terrain cab wagon closed 4WD 4G93DOHCB		Propshaft	PS900397
	1999.06-2005.02	MT	Front	Terrain cab wagon closed 4WD 4G93DOHCB		Propshaft	PS900431
	1999.06-2005.02	MT	Rear	Terrain cab wagon closed 4WD 4G93DOHCB		Propshaft	PS900432
	1999.06-2005.02		Centre	Terrain cab wagon closed 4WD 4G93DOHCB		Center Bearing Support	538619
2.0 (95 kw)	2001.10-2005.02	AT	Front	Terrain cab wagon closed 4WD 4G94DOHC		Propshaft	PS900397
	2001.10-2005.02	MT	Front	Terrain cab wagon closed 4WD 4G94DOHC		Propshaft	PS900431
	2001.10-2005.02		Centre	Terrain cab wagon closed 4WD 4G94DOHC		Center Bearing Support	538619
L200							
2.0 (90 kw)	1996.09-2001.07		Centre	Pickup RWD 4G63S	Bolt Hole Centres:160mm	Center Bearing Support	538619
	1996.09-2001.07		Centre	Pickup RWD 4G63S	Bolt Hole Centres:162mm	Center Bearing Support	539049
2.2 (110 kw)	2019.07-	MT	Front	Pickup 4WD 4N14		Propshaft	PS900582
2.4 (91 kw)	1992.06-1996.08		Centre	Pickup RWD 4G64		Center Bearing Support	539049
2.4 (97 kw)	1996.09-2004.08		Centre	Pickup 4WD 4G64S		Center Bearing Support	538645
	2007.05-2015.12		Centre	Pickup RWD 4G64 (16V)		Center Bearing Support	538659
	2014.11-		Centre	Pickup RWD 4G64 (16V)		Center Bearing Support	538659
2.4 (113 kw)	2015.09-	MT	Front	Pickup 4WD 4N15		Propshaft	PS900582
2.4 (133 kw)	2015.01-		Rear	Platform/Chassis 4WD 4N15		Propshaft	PS900633
	2015.09-	MT	Front	Pickup 4WD 4N15		Propshaft	PS900582
	2015.09-	MT	Rear	Pickup 4WD 4N15		Propshaft	PS900633
	2015.09-		Centre	Pickup 4WD 4N15		Center Bearing Support	538659
2.5 (51 kw)	1986.11-1996.08		Centre	Pickup RWD 4D56	Bolt Hole Centres:160mm	Center Bearing Support	538619
	1986.11-1996.08		Centre	Pickup RWD 4D56	bolt Hole Centres:171mm	Center Bearing Support	539050
	1987.12-1996.08		Centre	Pickup 4WD 4D56	538619 and 538645 different structure	Center Bearing Support	538619
	1987.12-1996.08		Centre	Pickup 4WD 4D56	538645 and 538619 different structure	Center Bearing Support	538645
2.5 (55 kw)	1996.09-2005.03		Centre	Pickup RWD 4D56		Center Bearing Support	538619
	2011.08-2015.12	AT	Front	Pickup 4WD 4D56		Propshaft	PS901671

	YEAR	TRANSM.	FITTING POSITION	BODY STYLE & DRIVE TYPE & ENGINE	REMARKS	PRODUCT	GSP Ref.
MITSUBISHI							
L200							
2.5 (55 kw)	2011.08-2015.12		Centre	Pickup 4WD 4D56		Center Bearing Support	538659
	2011.08-2015.12		Centre	Pickup RWD 4D56		Center Bearing Support	538659
2.5 (64 kw)	1987.12-1996.08		Centre	Pickup 4WD 4D56	538619 and 538645 different structure	Center Bearing Support	538619
	1987.12-1996.08		Centre	Pickup 4WD 4D56	538645 and 538619 different structure	Center Bearing Support	538645
2.5 (66 kw)	2011.08-2015.12		Centre	Pickup RWD 4D56TD		Center Bearing Support	538659
2.5 (73 kw)	1996.09-2007.12		Centre	Pickup 4WD 4D56		Center Bearing Support	538645
2.5 (74 kw)	2001.08-2005.09		Centre	Pickup 4WD 4D56		Center Bearing Support	538645
2.5 (81 kw)	2014.11-		Centre	Pickup 4WD 4D56 (16V)		Center Bearing Support	538659
	2016.01-		Centre	Pickup RWD 4D56 (16V)		Center Bearing Support	538659
2.5 (85 kw)	2001.08-2005.11		Centre	Pickup 4WD 4D56T		Center Bearing Support	538645
2.5 (94 kw)	2007.08-2015.12		Centre	Chassis Cabin RWD 4D56DOHC		Center Bearing Support	538659
	2010.04-2015.12		Centre	Pickup RWD 4D56DOHC		Center Bearing Support	538659
	2014.11-		Centre	Pickup RWD 4D56 (16V)		Center Bearing Support	538659
2.5 (98 kw)	2001.08-2005.11		Centre	Pickup 4WD 4D56		Center Bearing Support	538645
	2005.11-2015.12	AT	Front	Pickup 4WD 4D56DOHC		Propshaft	PS901671
	2005.11-2015.12		Centre	Pickup 4WD 4D56DOHC		Center Bearing Support	538659
2.5 (100 kw)	2005.11-2015.12	AT	Front	Pickup 4WD 4D56DOHC		Propshaft	PS901671
	2005.11-2015.12	MT	Front	Pickup 4WD 4D56DOHC	With Groove structure	Propshaft	PS901905
	2005.11-2015.12	5MT	Rear	Pickup 4WD 4D56DOHC	Model year to:2012;Two Piece Shaft	Propshaft	PS900399
	2005.11-2015.12	5MT	Rear	Pickup 4WD 4D56DOHC	Model year from:2013	Propshaft	PS901655
	2005.11-2015.12	MT	Rear	Pickup 4WD 4D56DOHC	One Piece Shaft	Propshaft	PS901656
	2005.11-2015.12	MT	-	Pickup 4WD 4D56DOHC	Without Groove structure	Propshaft	PS900620
	2005.11-2015.12		Centre	Pickup 4WD 4D56DOHC		Center Bearing Support	538659
	2005.11-2015.12		Centre	Pickup RWD 4D56DOHC		Center Bearing Support	538659
	2015.01-		Centre	Pickup RWD 4D56 (16V)		Center Bearing Support	538659
2.5 (103 kw)	2010.04-2015.12		Front	Pickup 4WD 4D56-HP		Propshaft	PS900620
	2010.04-2015.12		Centre	Pickup 4WD 4D56-HP		Center Bearing Support	538659
2.5 (123 kw)	2007.08-2015.12		Centre	Pickup RWD 4D56DOHC		Center Bearing Support	538659
	2007.10-2015.12	AT	Front	Pickup 4WD 4D56DOHC		Propshaft	PS901671
	2007.10-2015.12	MT	Front	Pickup 4WD 4D56DOHC		Propshaft	PS900620
	2007.10-2015.12	5MT	Rear	Pickup 4WD 4D56DOHC		Propshaft	PS900399
	2007.10-2015.12		Centre	Pickup 4WD 4D56DOHC		Center Bearing Support	538659
2.5 (131 kw)	2009.06-2015.12	AT	Front	Pickup 4WD 4D56DOHC		Propshaft	PS901671
	2009.06-2015.12	MT	Front	Pickup 4WD 4D56DOHC		Propshaft	PS900620
	2009.06-2015.12		Centre	Pickup 4WD 4D56DOHC		Center Bearing Support	538659
	2009.09-2015.12	MT	Front	Chassis Cabin 4WD 4D56DOHC		Propshaft	PS900620
	2009.09-2015.12		Centre	Chassis Cabin 4WD 4D56DOHC		Center Bearing Support	538659
	2013.03-2015.12		Centre	Pickup RWD 4D56DOHC		Center Bearing Support	538659
	2014.11-		Centre	Pickup RWD 4D56 (16V)		Center Bearing Support	538659
2.6 (76 kw)	1989.11-1995.05		Centre	Pickup 4WD G54B		Center Bearing Support	538645
3.0 (108 kw)	1996.06-2006.08		Centre	Pickup 4WD 6G72SOHC		Center Bearing Support	538645
3.5 (137 kw)	2011.08-2015.12	MT	Front	Pickup 4WD 6G74SOHC		Propshaft	PS900620
	2011.08-2015.12		Centre	Pickup 4WD 6G74SOHC		Center Bearing Support	538659
3.5 (147 kw)	2009.09-2015.12	MT	Front	Pickup 4WD 6G74 (SOHC 24V)		Propshaft	PS900620
	2009.09-2015.12		Centre	Pickup 4WD 6G74 (SOHC 24V)		Center Bearing Support	538659
L200 Triton/Hunter							
3.2 (132 kw)	2013.11-2018.12		Front	Pickup 4WD 4M41	Model year to:2015	Propshaft	PS900620
L200/Triton							
3.2 (125 kw)	2012.01-2016.12		Front	Pickup 4WD 4M41	Model year to:2015	Propshaft	PS900620
L200/Triton/Hunter							
2.4 (94 kw)	2005.11-2015.12		Centre	Pickup RWD 4G64(16V)		Center Bearing Support	538659
2.4 (97 kw)	2011.08-2015.12		Centre	Pickup 4WD 4G64 (16V)		Center Bearing Support	538659
2.5 (103 kw)	2010.04-2015.12		Centre	Pickup RWD 4D56-HP		Center Bearing Support	538659
2.8 (71 kw)	2005.05-2015.12		Centre	Pickup 4WD 4M40-A		Center Bearing Support	538659
3.5 (147 kw)	2007.05-2015.12		Front	Pickup 4WD 6G74(SOHC 24V)		Propshaft	PS900620
	2007.05-2015.12		Centre	Pickup 4WD 6G74(SOHC 24V)		Center Bearing Support	538659
3.5 (151 kw)	2009.08-2016.12		Front	Pickup 4WD 6G74(SOHC 24V)	Model year to:2015	Propshaft	PS900620
	2009.08-2016.12		Centre	Pickup 4WD 6G74(SOHC 24V)		Center Bearing Support	538659
L200/Triton/L200 Sportero							
2.4 (97 kw)	2014.11-		Centre	Pickup 4WD 4G64 (16V)		Center Bearing Support	538659
L400							
2.0 (83 kw)	1995.09-2002.10		Centre	Bus RWD 4G63 (SOHC 16V)		Center Bearing Support	538630
2.0 (85 kw)	1995.05-2000.05		Centre	Bus RWD 4G63 (SOHC 16V)		Center Bearing Support	538630
	1996.06-2001.03		Centre	Van RWD 4G63 (SOHC 16V)		Center Bearing Support	538630

	YEAR	TRANSM.	FITTING POSITION	BODY STYLE & DRIVE TYPE & ENGINE	REMARKS	PRODUCT	GSP Ref.
MITSUBISHI							
L400							
2.4 (94 kw)	1996.09-2005.06		Centre	Bus RWD 4G64 (16V)		Center Bearing Support	538630
2.4 (97 kw)	1995.05-2002.10		Centre	Bus RWD 4G64 (16V)		Center Bearing Support	538630
	1996.06-2006.02		Centre	Van RWD 4G64 (16V)		Center Bearing Support	538630
2.5 (64 kw)	1995.05-2005.06		Centre	Bus RWD 4D56-T (06.99-.)		Center Bearing Support	538630
	1996.09-2005.06		Centre	Van RWD 4D56-T (06.99-.)		Center Bearing Support	538630
2.5 (73 kw)	1995.05-2000.05		Centre	Bus RWD 4D56-TD (05.95-.)		Center Bearing Support	538630
Lancer							
2.0 (200 kw)	2001.01-2003.01		Front;Rear	Saloon 4WD 4G63 Turbo		Center Bearing Support	539052
	2005.09-2007.03		Front;Rear	Estate 4WD 4G63 Turbo		Center Bearing Support	539052
2.0 (206 kw)	2005.09-2007.03		Front;Rear	Estate 4WD 4G63 Turbo		Center Bearing Support	539052
Lancer Evolution							
2.0 (195 kw)	2003.08-2007.11		Front;Rear	Saloon 4WD 4G63DOHC		Center Bearing Support	539052
2.0 (206 kw)	2000.12-2005.03		Front;Rear	Saloon 4WD 4G63DOHC		Center Bearing Support	539052
	2007.10-	MT	Rear	Saloon 4WD 4B11	Date to:2016.01	Propshaft	PS901722
2.0 (208 kw)	2005.08-2007.09		Front;Rear	Saloon 4WD 4G63DOHC		Center Bearing Support	539052
2.0 (213 kw)	2005.08-2007.09		Front;Rear	Saloon 4WD 4G63DOHC		Center Bearing Support	539052
2.0 (217 kw)	2007.08-2015.12	MT/AT	Rear	Saloon 4WD 4B11		Propshaft	PS901722
2.0 (221 kw)	2007.10-	MT/AT	Rear	Saloon 4WD 4B11	Date to:2016.01	Propshaft	PS901722
2.0 (225 kw)	2003.06-2004.04		Front;Rear	Saloon 4WD 4G63DOHC		Center Bearing Support	539052
2.0 (227 kw)	2003.08-2004.04		Front;Rear	Saloon 4WD 4G63DOHC		Center Bearing Support	539052
	2005.06-2008.10		Front;Rear	Saloon 4WD 4G63DOHC		Center Bearing Support	539052
2.0 (242 kw)	2008.06-	MT/AT	Rear	Saloon 4WD 4B11	Date to:2016.01	Propshaft	PS901722
2.0 (243 kw)	2004.04-2006.08		Front;Rear	Saloon 4WD 4G63DOHC		Center Bearing Support	539052
2.0 (246 kw)	2003.12-2006.08		Front;Rear	Saloon 4WD 4G63DOHC		Center Bearing Support	539052
2.0 (255 kw)	2004.06-2005.03		Front;Rear	Saloon 4WD 4G63DOHC		Center Bearing Support	539052
2.0 (257 kw)	2005.06-2008.10		Front;Rear	Saloon 4WD 4G63DOHC		Center Bearing Support	539052
	2011.10-	MT	Rear	Saloon 4WD 4B11	Date to:2016.01	Propshaft	PS901722
2.0 (264 kw)	2008.06-	MT/AT	Rear	Saloon 4WD 4B11	Date to:2016.01	Propshaft	PS901722
2.0 (269 kw)	2006.07-2008.10		Front;Rear	Saloon 4WD 4G63DOHC		Center Bearing Support	539052
2.0 (273 kw)	2006.07-2007.12		Front;Rear	Saloon 4WD 4G63DOHC		Center Bearing Support	539052
2.0 (296 kw)	2009.06-	MT/AT	Rear	Saloon 4WD 4B11	Date to:2016.01	Propshaft	PS901722
2.0 (301 kw)	2009.05-2010.12	MT	Rear	Saloon 4WD 4B11		Propshaft	PS901722
2.0 (302 kw)	2004.10-2006.08		Front;Rear	Saloon 4WD 4G63DOHC		Center Bearing Support	539052
Montero							
2.5 (73 kw)	1991.03-2000.04		Centre	Terrain cab wagon closed 4WD 4D56-TD (05.91-.)		Center Bearing Support	538619
	2000.04-2006.12	5MT	Front	Terrain cab open 4WD 4D56T		Propshaft	PS900421
2.5 (85 kw)	2001.09-2007.01	5MT	Front	Terrain cab open 4WD 4D56T		Propshaft	PS900421
	2002.07-2007.01	5MT	Front	Terrain cab wagon closed 4WD 4D56T		Propshaft	PS900421
3.0 (104 kw)	1988.11-1990.11	AT	Rear	Terrain cab wagon closed 4WD 6G72		Propshaft	PS900411
3.0 (110 kw)	1991.03-1995.12	AT	Rear	Terrain cab open 4WD 6G72	Date from:1992,Date to:1994	Propshaft	PS900413
	1991.03-1995.12	MT	Rear	Terrain cab open 4WD 6G72	Date from:1992,Date to:1994	Propshaft	PS900414
	1991.03-1995.12		Centre	Terrain cab open 4WD 6G72		Center Bearing Support	538619
	1991.03-1997.10	AT	Front	Terrain cab wagon closed 4WD 6G72	Date from:1995,Date to:1996	Propshaft	PS900417
	1991.03-1997.10	MT	Front	Terrain cab wagon closed 4WD 6G72	Date from:1995,Date to:1996	Propshaft	PS900410
	1991.03-1997.10	AT	Rear	Terrain cab wagon closed 4WD 6G72	Date from:1992,Date to:1994	Propshaft	PS900413
	1991.03-1997.10	MT	Rear	Terrain cab wagon closed 4WD 6G72	Date from:1992,Date to:1994	Propshaft	PS900414
	1991.03-1997.10		Centre	Terrain cab wagon closed 4WD 6G72		Center Bearing Support	538619
3.0 (133 kw)	1994.06-2000.04	AT	Front	Terrain cab open 4WD 6G72SOHC	Date from:1995,Date to:1996	Propshaft	PS900417
	1994.06-2000.04	MT	Front	Terrain cab open 4WD 6G72SOHC	Date from:1995,Date to:1996	Propshaft	PS900410
	1994.06-2000.04		Centre	Terrain cab open 4WD 6G72SOHC		Center Bearing Support	538619
3.2 (118 kw)	2001.11-2007.01	5MT	Front	Terrain cab open 4WD 4M41		Propshaft	PS900421
	2007.02-2011.05	5MT	Front	Terrain cab wagon closed 4WD 4M41R		Propshaft	PS900421
3.2 (121 kw)	2000.07-2001.10	5MT	Front	Terrain cab open 4WD 4M41		Propshaft	PS900421
	2000.07-2001.10		Centre	Terrain cab open 4WD 4M41		Center Bearing Support	538619
	2007.02-	5MT	Front	Terrain cab wagon closed 4WD 4M41R		Propshaft	PS900421
3.5 (143 kw)	1993.11-2000.07		Centre	Terrain cab wagon closed 4WD 6G74DOHC		Center Bearing Support	538619
3.5 (149 kw)	2000.04-2007.01	5AT	Front	Terrain cab wagon closed 4WD 6G74DOHC	Model year to:2006	Propshaft	PS900420
	2000.04-2007.01	5MT	Front	Terrain cab wagon closed 4WD 6G74DOHC	Model year to:2006	Propshaft	PS900421
	2000.07-2007.01	5AT	Front	Terrain cab open 4WD 6G74DOHC	Model year to:2006	Propshaft	PS900420
	2000.07-2007.01	5MT	Front	Terrain cab open 4WD 6G74DOHC		Propshaft	PS900421
3.5 (153 kw)	1993.11-2000.02		Centre	Terrain cab wagon closed 4WD 6G74DOHC		Center Bearing Support	538619
3.8 (184 kw)	2006.11-	5MT	Front	Terrain cab wagon closed 4WD 6G75		Propshaft	PS900421

	YEAR	TRANSM.	FITTING POSITION	BODY STYLE & DRIVE TYPE & ENGINE	REMARKS	PRODUCT	GSP Ref.
MITSUBISHI							
Montero I.O							
1.8 (84 kw)	2001.03-2005.02	AT	Front	Terrain cab wagon closed 4WD 4G93		Propshaft	PS900397
	2001.03-2005.02	MT	Front	Terrain cab wagon closed 4WD 4G93		Propshaft	PS900431
	2001.03-2005.02	MT	Rear	Terrain cab wagon closed 4WD 4G93		Propshaft	PS900432
	2001.03-2005.02		Centre	Terrain cab wagon closed 4WD 4G93		Center Bearing Support	538619
1.8 (88 kw)	1999.08-2005.02	AT	Front	Terrain cab wagon closed 4WD 4G93DOHCB		Propshaft	PS900397
	1999.08-2005.02	MT	Front	Terrain cab wagon closed 4WD 4G93DOHCB		Propshaft	PS900431
	1999.08-2005.02	MT	Rear	Terrain cab wagon closed 4WD 4G93DOHCB		Propshaft	PS900432
	1999.08-2005.02		Centre	Terrain cab wagon closed 4WD 4G93DOHCB		Center Bearing Support	538619
2.0 (95 kw)	2001.10-2005.02	AT	Front	Terrain cab wagon closed 4WD 4G94DOHC		Propshaft	PS900397
	2001.10-2005.02	MT	Front	Terrain cab wagon closed 4WD 4G94DOHC		Propshaft	PS900431
	2001.10-2005.02		Centre	Terrain cab wagon closed 4WD 4G94DOHC		Center Bearing Support	538619
Montero Sport							
2.5 (73 kw)	1998.11-2009.02		Centre	Terrain cab wagon closed 4WD 4D56		Center Bearing Support	538619
2.5 (85 kw)	2002.10-2009.02		Centre	Terrain cab wagon closed 4WD 4D56		Center Bearing Support	538645
2.5 (98 kw)	2003.08-2009.02		Centre	Terrain cab wagon closed 4WD 4D56T		Center Bearing Support	538619
3.0 (125 kw)	2000.06-2003.02	AT	-	Terrain cab wagon closed 4WD 6G72SOHC	Model year from:2001,Model year to:2003	Joint,propshaft	801302
3.0 (129 kw)	1996.09-2003.12		Centre	Terrain cab wagon closed 4WD 6G72DOHC		Center Bearing Support	538645
3.0 (130 kw)	1998.11-2001.09		Centre	Terrain cab wagon closed 4WD 6G72DOHC		Center Bearing Support	538619
Montero/Pajero/Shogun							
2.5 (73 kw)	1990.12-2000.04		Centre	Open Off-Road Vehicle 4WD 4D56-TD (05.91-.)		Center Bearing Support	538619
2.8 (92 kw)	1994.06-1999.10		Centre	Closed Off-Road Vehicle 4WD 4M40-T		Center Bearing Support	538619
3.0 (130 kw)	1997.06-1999.10	AT	Front	Closed Off-Road Vehicle 4WD 6G72 (SOHC 24V)	Date from:1995,Date to:1996	Propshaft	PS900417
	1997.06-1999.10	MT	Front	Closed Off-Road Vehicle 4WD 6G72 (SOHC 24V)	Date from:1995,Date to:1996	Propshaft	PS900410
	1997.06-1999.10		Centre	Closed Off-Road Vehicle 4WD 6G72 (SOHC 24V)		Center Bearing Support	538619
3.0 (133 kw)	1994.06-1997.05	AT	Front	Closed Off-Road Vehicle 4WD 6G72 (SOHC 24V)	Date from:1995,Date to:1996	Propshaft	PS900417
	1994.06-1997.05	MT	Front	Closed Off-Road Vehicle 4WD 6G72 (SOHC 24V)	Date from:1995,Date to:1996	Propshaft	PS900410
	1994.06-1997.05		Centre	Closed Off-Road Vehicle 4WD 6G72 (SOHC 24V)		Center Bearing Support	538619
3.8 (160 kw)	2002.09-2006.12	AT	Front	Closed Off-Road Vehicle 4WD 6G75		Propshaft	PS900402
	2002.09-2006.12	AT	Front	Closed Off-Road Vehicle 4WD 6G75		Joint,propshaft	804544
Outlander							
2.0 (100 kw)	2003.05-2008.07		Front	SUV 4WD 4G63DOHC		Center Bearing Support	539054
	2003.05-2008.07		Rear	SUV 4WD 4G63DOHC		Center Bearing Support	539053
	2003.05-2008.07		Front;Rear	SUV 4WD 4G63DOHC		Center Bearing Support	539052
	2003.05-2008.07		Front;Rear	SUV FWD 4G63DOHC		Center Bearing Support	539052
2.0 (103 kw)	2006.11-2010.06		Centre	SUV 4WD BSY		Center Bearing Support	539065
	2006.11-2010.06		Centre	SUV 4WD BSY		Center Bearing Support Kit	538690S
2.0 (107 kw)	2012.10-		Centre	SUV 4WD 4J11		Center Bearing Support Kit	539907S
	2013.10-		Centre	SUV 4WD 4J11		Center Bearing Support Kit	539907S
2.0 (108 kw)	2006.11-2012.12	CVT	Rear	SUV 4WD 4B11	Model year from:2011	Propshaft	PS900401
	2006.11-2012.12		Centre	SUV 4WD 4B11		Center Bearing Support Kit	539907S
	2006.11-2013.08		Centre	SUV FWD 4B11		Center Bearing Support Kit	539907S
2.0 (110 kw)	2012.08-		Centre	SUV 4WD 4J11		Center Bearing Support	539065
	2012.08-		Centre	SUV 4WD 4J11		Center Bearing Support Kit	539907S
2.0 (147 kw)	2012.12-		Centre	SUV 4WD 4B11		Center Bearing Support Kit	539907S
2.0 (148 kw)	2004.04-2006.10		Front	SUV 4WD 4G63DOHC		Center Bearing Support	539054
	2004.04-2006.10		Rear	SUV 4WD 4G63DOHC		Center Bearing Support	539053
	2004.04-2006.10		Front;Rear	SUV 4WD 4G63DOHC		Center Bearing Support	539052
2.2 (103 kw)	2010.09-2012.12	6MT	Rear	SUV 4WD 4N14		Propshaft	PS901676
2.2 (110 kw)	2012.08-	6MT/6AT	Rear	SUV 4WD 4N14		Propshaft	PS901676
	2012.08-		Centre	SUV 4WD 4N14		Center Bearing Support	539065
2.2 (115 kw)	2007.08-2012.11		Rear	SUV 4WD 4HK/4HN		Propshaft	PS901676
	2007.08-2012.11		Centre	SUV 4WD 4HK/4HN		Center Bearing Support	539065
	2007.08-2012.11		Centre	SUV 4WD 4HK/4HN		Center Bearing Support Kit	538690S
2.2 (130 kw)	2006.11-2012.12	6MT	Rear	SUV 4WD 4N14		Propshaft	PS901676
2.4 (102 kw)	2003.02-2006.10		-	SUV 4WD 4G64		Joint,propshaft	699257
	2003.02-2006.10		Front	SUV 4WD 4G64		Center Bearing Support	539054
	2003.02-2006.10		Rear	SUV 4WD 4G64		Center Bearing Support	539053
	2003.02-2006.10		Front;Rear	SUV 4WD 4G64		Center Bearing Support	539052
2.4 (118 kw)	2003.09-2007.09	4AT	Rear	SUV 4WD 4G69	Model year to:2006	Propshaft	PS900400
	2003.09-2007.09		-	SUV 4WD 4G69	Model year to:2006	Joint,propshaft	699257
	2003.09-2007.09		Front	SUV 4WD 4G69		Center Bearing Support	539054
	2003.09-2007.09		Rear	SUV 4WD 4G69		Center Bearing Support	539053
2.4 (119 kw)	2003.05-2006.10	5MT	Rear	SUV 4WD 4G69		Propshaft	PS900400
	2003.05-2006.10		-	SUV 4WD 4G69	Model year to:2006	Joint,propshaft	699257

	YEAR	TRANSM.	FITTING POSITION	BODY STYLE & DRIVE TYPE & ENGINE	REMARKS	PRODUCT	GSP Ref.
MITSUBISHI							
Outlander							
2.4 (119 kw)	2003.05-2006.10		Front	SUV 4WD 4G69		Center Bearing Support	539054
	2003.05-2006.10		Rear	SUV 4WD 4G69		Center Bearing Support	539053
2.4 (121 kw)	2015.05-		Centre	SUV FWD 4J12		Center Bearing Support Kit	539907S
2.4 (123 kw)	2012.10-		Centre	SUV 4WD 4B12		Center Bearing Support Kit	539907S
2.4 (124 kw)	2012.08-		Centre	SUV FWD 4B12, 4J12		Center Bearing Support Kit	539907S
	2012.10-		Centre	SUV 4WD 4B12		Center Bearing Support Kit	539907S
2.4 (125 kw)	2006.11-2013.12	CVT	Rear	SUV 4WD 4B12	Model year from:2008	Propshaft	PS900401
	2006.11-2013.12		Centre	SUV 4WD 4B12		Center Bearing Support	539065
	2006.11-2013.12		Centre	SUV 4WD 4B12	Date to:2012.03	Center Bearing Support Kit	538690S
	2006.11-2013.12		Centre	SUV 4WD 4B12	Date from:2012.03,Date to:2012.07	Center Bearing Support Kit	539907S
	2007.06-2013.08		Centre	SUV FWD 4B12		Center Bearing Support Kit	539907S
	2007.09-2010.06		Centre	SUV 4WD 4B12		Center Bearing Support Kit	539907S
2.4 (126 kw)	2012.09-2014.04		Centre	SUV 4WD 4B12		Center Bearing Support Kit	539907S
	2012.09-2014.04		Centre	SUV FWD 4B12		Center Bearing Support Kit	539907S
2.4 (165 kw)	2019.09-		Centre	SUV 4WD 4B12		Center Bearing Support Kit	539907S
3.0 (162 kw)	2006.11-2012.11		Centre	SUV FWD 6B31		Center Bearing Support Kit	539907S
	2006.11-2013.08	AT	Rear	SUV 4WD 6B31	Model year from:2007	Propshaft	PS900401
	2006.11-2013.08		Centre	SUV 4WD 6B31		Center Bearing Support Kit	539907S
3.0 (164 kw)	2011.01-2013.08	AT	Rear	SUV 4WD 6B31	Model year from:2007	Propshaft	PS900401
3.0 (165 kw)	2014.04-		Centre	SUV 4WD 6B31		Center Bearing Support Kit	539907S
3.0 (167 kw)	2012.08-		Centre	SUV 4WD 6B31		Center Bearing Support Kit	539907S
3.0 (169 kw)	2010.09-2012.12	AT	Rear	SUV 4WD 6B31		Propshaft	PS900401
	2010.09-2012.12		Centre	SUV 4WD 6B31		Center Bearing Support Kit	539907S
	2014.03-		Centre	SUV 4WD 6B31		Center Bearing Support Kit	539907S
3.0 (172 kw)	2009.09-2012.11		Centre	SUV 4WD 6B31		Center Bearing Support Kit	539907S
	2009.09-2012.12		Centre	SUV FWD 6B31		Center Bearing Support Kit	539907S
3.0 (177 kw)	2009.10-2012.11		Centre	SUV 4WD 6B31		Center Bearing Support Kit	539907S
	2013.09-2018.12		Centre	SUV 4WD 6B31		Center Bearing Support Kit	539907S
Pajero							
2.4 (82 kw)	1991.03-2000.04		Centre	Terrain cab wagon closed 4WD 4G64		Center Bearing Support	538619
	1991.04-2000.04		Centre	Terrain cab open 4WD 4G64		Center Bearing Support	538619
2.5 (73 kw)	1990.12-1999.10		Centre	Terrain cab wagon closed 4WD 4D56-TD (05.91-.)		Center Bearing Support	538619
	2000.04-2006.12	5MT	Front	Terrain cab open 4WD 4D56T		Propshaft	PS900421
	2000.04-2006.12	5MT	Front	Terrain cab wagon closed 4WD 4D56T		Propshaft	PS900421
2.5 (85 kw)	2001.09-2006.12	5MT	Front	Terrain cab wagon closed 4WD 4D56T		Propshaft	PS900421
	2001.09-2007.01	5MT	Front	Terrain cab open 4WD 4D56T		Propshaft	PS900421
3.0 (104 kw)	1988.11-1990.11	AT	Rear	Terrain cab wagon closed 4WD 6G72		Propshaft	PS900411
3.0 (110 kw)	1990.12-1995.12	AT	Front	Terrain cab wagon closed 4WD 6G72	Date from:1995,Date to:1996	Propshaft	PS900417
	1990.12-1995.12	MT	Front	Terrain cab wagon closed 4WD 6G72	Date from:1995,Date to:1996	Propshaft	PS900410
	1990.12-1995.12	AT	Rear	Terrain cab open 4WD 6G72	Date from:1992,Date to:1994	Propshaft	PS900413
	1990.12-1995.12	AT	Rear	Terrain cab wagon closed 4WD 6G72	Date from:1992,Date to:1994	Propshaft	PS900413
	1990.12-1995.12	MT	Rear	Terrain cab open 4WD 6G72	Date from:1992,Date to:1994	Propshaft	PS900414
	1990.12-1995.12	MT	Rear	Terrain cab wagon closed 4WD 6G72	Date from:1992,Date to:1994	Propshaft	PS900414
	1990.12-1995.12		Centre	Terrain cab open 4WD 6G72		Center Bearing Support	538619
	1990.12-1995.12		Centre	Terrain cab wagon closed 4WD 6G72		Center Bearing Support	538619
3.0 (125 kw)	2001.10-2007.01	4AT	Front	Terrain cab open 4WD 6G72DOHC		Propshaft	PS900420
	2001.10-2007.01	5MT	Front	Terrain cab open 4WD 6G72DOHC		Propshaft	PS900421
	2001.10-2007.01	4AT	Rear	Terrain cab open 4WD 6G72DOHC		Propshaft	PS900419
	2001.10-2007.01	5MT	Rear	Terrain cab open 4WD 6G72DOHC		Propshaft	PS900418
3.0 (131 kw)	2007.02-	5MT	Front	Terrain cab wagon closed 4WD 6G72SOHC		Propshaft	PS900421
	2007.02-	4AT	Rear	Terrain cab wagon closed 4WD 6G72SOHC		Propshaft	PS900419
	2007.02-	5MT	Rear	Terrain cab wagon closed 4WD 6G72SOHC		Propshaft	PS900418
3.0 (133 kw)	1994.06-2000.04	AT	Front	Terrain cab open 4WD 6G72SOHC	Date from:1995,Date to:1996	Propshaft	PS900417
	1994.06-2000.04	MT	Front	Terrain cab open 4WD 6G72SOHC	Date from:1995,Date to:1996	Propshaft	PS900410
	1994.06-2000.04		Centre	Terrain cab open 4WD 6G72SOHC		Center Bearing Support	538619
3.2 (118 kw)	2000.04-2007.09	MT	Front	Terrain cab wagon closed 4WD 4M41		Propshaft	PS900421
	2001.10-2007.01	5MT	Front	Terrain cab open 4WD 4M41		Propshaft	PS900421
3.2 (121 kw)	2000.02-2007.09	5MT	Front	Terrain cab open 4WD 4M41		Propshaft	PS900421
	2000.02-2007.09		Centre	Terrain cab open 4WD 4M41		Center Bearing Support	538619
3.5 (143 kw)	1993.11-2000.07		Centre	Terrain cab wagon closed 4WD 6G74SOHC		Center Bearing Support	538619
3.5 (149 kw)	2000.04-2007.01	5AT	Front	Terrain cab open 4WD 6G74DOHC	Model year to:2006	Propshaft	PS900420
	2000.04-2007.01	5AT	Front	Terrain cab wagon closed 4WD 6G74DOHC	Model year to:2006	Propshaft	PS900420
	2000.04-2007.01	5MT	Front	Terrain cab open 4WD 6G74DOHC		Propshaft	PS900421
	2000.04-2007.01	5MT	Front	Terrain cab wagon closed 4WD 6G74DOHC	Model year to:2006	Propshaft	PS900421

	YEAR	TRANSM.	FITTING POSITION	BODY STYLE & DRIVE TYPE & ENGINE	REMARKS	PRODUCT	GSP Ref.
MITSUBISHI							
Pajero							
3.5 (153 kw)	1993.11-2000.02		Centre	Terrain cab wagon closed 4WD 6G74DOHC		Center Bearing Support	538619
3.8 (182 kw)	2010.02-	5MT	Front	Terrain cab wagon closed 4WD 6G75		Propshaft	PS900421
Pajero Classic/Shogun Classic/Montero Classic							
3.8 (160 kw)	2002.06-	AT	Front	Closed Off-Road Vehicle 4WD 6G75	Model year to:2006	Propshaft	PS900402
	2002.06-	AT	Front	Closed Off-Road Vehicle 4WD 6G75	Model year to:2006	Joint,propshaft	804544
3.8 (184 kw)	2006.09-	AT	Front	Closed Off-Road Vehicle 4WD 6G75	Model year to:2006	Propshaft	PS900402
	2006.09-	AT	Front	Closed Off-Road Vehicle 4WD 6G75	Model year to:2006	Joint,propshaft	804544
Pajero I.O							
2.0 (95 kw)	2001.10-2005.02	AT	Front	Terrain cab wagon closed 4WD 4G94DOHC		Propshaft	PS900397
	2001.10-2005.02	MT	Front	Terrain cab wagon closed 4WD 4G94DOHC		Propshaft	PS900431
	2001.10-2005.02		Centre	Terrain cab wagon closed 4WD 4G94DOHC		Center Bearing Support	538619
Pajero Mini							
0.7 (37 kw)	1994.10-1998.08		Centre	Closed Off-Road Vehicle RWD 4A30		Center Bearing Support	539051
0.7 (38 kw)	1994.10-2012.08		Centre	Terrain cab wagon closed RWD 4A30		Center Bearing Support	539051
Pajero Pinin							
1.8 (84 kw)	2001.03-2005.02	AT	Front	Terrain cab wagon closed 4WD 4G93		Propshaft	PS900397
	2001.03-2005.02	MT	Front	Terrain cab wagon closed 4WD 4G93		Propshaft	PS900431
	2001.03-2005.02	MT	Rear	Terrain cab wagon closed 4WD 4G93		Propshaft	PS900432
	2001.03-2005.02		Centre	Terrain cab wagon closed 4WD 4G93		Center Bearing Support	538619
1.8 (88 kw)	1999.06-2001.02	AT	Front	Terrain cab wagon closed 4WD 4G93DOHCB		Propshaft	PS900397
	1999.06-2001.02	MT	Front	Terrain cab wagon closed 4WD 4G93DOHCB		Propshaft	PS900431
	1999.06-2001.02	MT	Rear	Terrain cab wagon closed 4WD 4G93DOHCB		Propshaft	PS900432
	1999.06-2001.02		Centre	Terrain cab wagon closed 4WD 4G93DOHCB		Center Bearing Support	538619
2.0 (95 kw)	2001.10-2005.02	AT	Front	Terrain cab wagon closed 4WD 4G94DOHC		Propshaft	PS900397
	2001.10-2005.02	MT	Front	Terrain cab wagon closed 4WD 4G94DOHC		Propshaft	PS900431
	2001.10-2005.02		Centre	Terrain cab wagon closed 4WD 4G94DOHC		Center Bearing Support	538619
Pajero Pinin/IO/Shogun Pinin/Montero IO							
1.8 (88 kw)	1999.10-2001.10		Centre	Closed Off-Road Vehicle 4WD 4G93 (GDI)		Center Bearing Support	538619
Pajero Pinin/Pajero TR4							
2.0 (96 kw)	2002.10-2007.06	MT	Front	Closed Off-Road Vehicle 4WD 4G94		Propshaft	PS900431
Pajero Sport							
2.5 (73 kw)	1998.11-2009.02		Centre	Terrain cab wagon closed 4WD 4D56		Center Bearing Support	538619
2.5 (85 kw)	2000.02-2009.02		Centre	Terrain cab wagon closed 4WD 4D56		Center Bearing Support	538645
2.5 (98 kw)	2003.08-2009.02		Centre	Terrain cab wagon closed 4WD 4D56T		Center Bearing Support	538619
2.5 (131 kw)	2008.07-2015.12	AT	Front	Terrain cab wagon closed 4WD 4D56DOHC	Date to:2015.11	Propshaft	PS901671
3.0 (123 kw)	2003.03-2009.12		Centre	Terrain cab wagon closed 4WD 6G72SOHC		Center Bearing Support	538619
3.0 (125 kw)	2001.10-2009.12	AT	-	Terrain cab wagon closed 4WD 6G72SOHC	Model year from:2001,Model year to:2003	Joint,propshaft	801302
3.0 (130 kw)	1998.11-2001.09		Centre	Terrain cab wagon closed 4WD 6G72DOHC		Center Bearing Support	538619
3.0 (161 kw)	2012.01-2015.12		Centre	Closed Off-Road Vehicle RWD 6B31		Center Bearing Support	538659
Pajero Van							
3.2 (147 kw)	2010.01-	5MT	Front	Terrain cab wagon closed 4WD 4M41R		Propshaft	PS900421
Pajero/Montero/Shogun							
3.5 (153 kw)	1994.06-1999.10		Centre	Closed Off-Road Vehicle 4WD 6G74 (DOHC 24V)		Center Bearing Support	538619
Pajero/Shogun/Pajero Canvas/Shogun Canvas							
3.0 (130 kw)	1994.06-2000.04	AT	Front	Open Off-Road Vehicle 4WD 6G72(SOHC)	Date from:1995,Date to:1996	Propshaft	PS900417
	1994.06-2000.04	MT	Front	Open Off-Road Vehicle 4WD 6G72(SOHC)	Date from:1995,Date to:1996	Propshaft	PS900410
Pajero/Shogun/Pajero Wagon							
3.0 (105 kw)	1988.05-1991.05	AT	Rear	Closed Off-Road Vehicle 4WD 6G72(SOHC 12V)		Propshaft	PS900411
RVR							
1.8 (102 kw)	2010.02-		Centre	SUV 4WD 4B10, 4J10		Center Bearing Support Kit	539907S
Shogun							
2.5 (73 kw)	1991.03-2000.04		Centre	Terrain cab wagon closed 4WD 4D56-TD (05.91-.)		Center Bearing Support	538619
	2000.04-2006.12	5MT	Front	Terrain cab open 4WD 4D56T		Propshaft	PS900421
2.5 (85 kw)	2001.09-2007.01	5MT	Front	Terrain cab open 4WD 4D56T		Propshaft	PS900421
3.0 (104 kw)	1989.06-1991.02	AT	Rear	Terrain cab wagon closed 4WD 6G72		Propshaft	PS900411
3.0 (110 kw)	1991.03-1995.12	AT	Rear	Terrain cab open 4WD 6G72	Date from:1992,Date to:1994	Propshaft	PS900413
	1991.03-1995.12	MT	Rear	Terrain cab open 4WD 6G72	Date from:1992,Date to:1994	Propshaft	PS900414
	1991.03-1995.12		Centre	Terrain cab open 4WD 6G72		Center Bearing Support	538619
	1991.03-1997.10	AT	Front	Terrain cab wagon closed 4WD 6G72	Date from:1995,Date to:1996	Propshaft	PS900417
	1991.03-1997.10	MT	Front	Terrain cab wagon closed 4WD 6G72	Date from:1995,Date to:1996	Propshaft	PS900410
	1991.03-1997.10	AT	Rear	Terrain cab wagon closed 4WD 6G72	Date from:1992,Date to:1994	Propshaft	PS900413
	1991.03-1997.10	MT	Rear	Terrain cab wagon closed 4WD 6G72	Date from:1992,Date to:1994	Propshaft	PS900414
	1991.03-1997.10		Centre	Terrain cab wagon closed 4WD 6G72		Center Bearing Support	538619

	YEAR	TRANSM.	FITTING POSITION	BODY STYLE & DRIVE TYPE & ENGINE	REMARKS	PRODUCT	GSP Ref.
MITSUBISHI							
Shogun							
3.0 (133 kw)	1994.06-2000.04	AT	Front	Terrain cab open 4WD 6G72SOHC	Date from:1995,Date to:1996	Propshaft	PS900417
	1994.06-2000.04	MT	Front	Terrain cab open 4WD 6G72SOHC	Date from:1995,Date to:1996	Propshaft	PS900410
	1994.06-2000.04		Centre	Terrain cab open 4WD 6G72SOHC		Center Bearing Support	538619
3.2 (118 kw)	2001.11-2007.01	5MT	Front	Terrain cab open 4WD 4M41		Propshaft	PS900421
3.2 (121 kw)	2000.07-2001.10	5MT	Front	Terrain cab open 4WD 4M41		Propshaft	PS900421
	2000.07-2001.10		Centre	Terrain cab open 4WD 4M41		Center Bearing Support	538619
3.5 (143 kw)	1993.11-2000.07		Centre	Terrain cab wagon closed 4WD 6G74SOHC		Center Bearing Support	538619
3.5 (149 kw)	2000.04-2007.01	5AT	Front	Terrain cab wagon closed 4WD 6G74DOHC	Model year to:2006	Propshaft	PS900420
	2000.04-2007.01	5MT	Front	Terrain cab wagon closed 4WD 6G74DOHC	Model year to:2006	Propshaft	PS900421
3.5 (153 kw)	1993.11-2000.07		Centre	Terrain cab wagon closed 4WD 6G74DOHC		Center Bearing Support	538619
Shogun Pinin							
1.8 (84 kw)	2001.03-2005.02	AT	Front	Terrain cab wagon closed 4WD 4G93		Propshaft	PS900397
	2001.03-2005.02	MT	Front	Terrain cab wagon closed 4WD 4G93		Propshaft	PS900431
	2001.03-2005.02	MT	Rear	Terrain cab wagon closed 4WD 4G93		Propshaft	PS900432
	2001.03-2005.02		Centre	Terrain cab wagon closed 4WD 4G93		Center Bearing Support	538619
1.8 (88 kw)	1999.06-2007.06	AT	Front	Terrain cab wagon closed 4WD 4G93DOHCB		Propshaft	PS900397
	1999.06-2007.06	MT	Front	Terrain cab wagon closed 4WD 4G93DOHCB		Propshaft	PS900431
	1999.06-2007.06	MT	Rear	Terrain cab wagon closed 4WD 4G93DOHCB		Propshaft	PS900432
	1999.06-2007.06		Centre	Terrain cab wagon closed 4WD 4G93DOHCB		Center Bearing Support	538619
2.0 (95 kw)	2001.10-2005.02	AT	Front	Terrain cab wagon closed 4WD 4G94DOHC		Propshaft	PS900397
	2001.10-2005.02	MT	Front	Terrain cab wagon closed 4WD 4G94DOHC		Propshaft	PS900431
	2001.10-2005.02		Centre	Terrain cab wagon closed 4WD 4G94DOHC		Center Bearing Support	538619
Shogun Sport							
2.5 (73 kw)	2000.04-2006.12		Centre	Terrain cab wagon closed 4WD 4D56		Center Bearing Support	538619
2.5 (85 kw)	2001.09-2006.12		Centre	Terrain cab wagon closed 4WD 4D56		Center Bearing Support	538645
3.0 (125 kw)	2001.10-2008.12	AT	-	Terrain cab wagon closed 4WD 6G72SOHC	Model year from:2001,Model year to:2003	Joint,propshaft	801302
3.0 (130 kw)	1998.11-2001.09		Centre	Terrain cab wagon closed 4WD 6G72DOHC		Center Bearing Support	538619
Shogun Van							
3.2 (118 kw)	2006.11-	5MT	Front	Terrain cab wagon closed 4WD 4M41R		Propshaft	PS900421
3.2 (147 kw)	2010.01-	5MT	Front	Terrain cab wagon closed 4WD 4M41R		Propshaft	PS900421
Space Gear							
2.0 (83 kw)	1995.09-2002.10		Centre	Bus RWD 4G63 (SOHC 16V)		Center Bearing Support	539049
2.5 (73 kw)	1995.05-2000.05		Centre	Bus 4WD 4D56-TD		Center Bearing Support	539049
	1995.05-2000.05		Centre	Bus RWD 4D56-TD		Center Bearing Support	539049
Space Runner							
1.8 (85 kw)	1996.06-1999.09		Centre	MPV 4WD 4G93		Center Bearing Support	539051
1.8 (90 kw)	1991.06-1999.09		Centre	MPV 4WD 4G93		Center Bearing Support	539051
Space Wagon							
1.8 (90 kw)	1991.10-1998.10		Centre	MPV 4WD 4G93		Center Bearing Support	539051
2.0 (98 kw)	1992.10-1998.11		Centre	MPV 4WD 4G63S		Center Bearing Support	539051
2.4 (108 kw)	1998.07-2004.01		Centre	MPV 4WD 4G64DOHCB		Center Bearing Support	539077
2.4 (110 kw)	1998.07-2004.01		Centre	MPV 4WD 4G64DOHCB		Center Bearing Support	539077
Space Wagon/Nimbus							
3.0 (158 kw)	2000.05-2003.05		Centre	MPV 4WD 6G72 (DOHC 24V)		Center Bearing Support	539077
Sport Wagon							
2.5 (73 kw)	1998.11-2009.02		Centre	Terrain cab wagon closed 4WD 4D56		Center Bearing Support	538619
2.5 (98 kw)	2003.09-2009.02		Centre	Terrain cab wagon closed 4WD 4D56T		Center Bearing Support	538619
Strada							
2.8 (92 kw)	1996.09-2005.11		Centre	Pickup 4WD 4M40T		Center Bearing Support	538645
3.2 (118 kw)	2007.01-2015.12		Front	Pickup 4WD 4M41		Propshaft	PS900620
3.2 (121 kw)	2007.01-2015.12		Front	Pickup 4WD 4M41R		Propshaft	PS900620
Strakar							
2.5 (55 kw)	1996.09-2001.07		Centre	Pickup RWD 4D56		Center Bearing Support	538619
2.5 (85 kw)	2001.08-2005.11		Centre	Pickup 4WD 4D56		Center Bearing Support	538645
Triton							
2.5 (100 kw)	2014.11-		Centre	Pickup 4WD 4D56DOHC		Center Bearing Support	538659
3.5 (135 kw)	2006.07-2010.12		Front	Pickup 4WD 6G74 (SOHC 24V)		Propshaft	PS900620
	2006.07-2010.12		Centre	Pickup 4WD 6G74 (SOHC 24V)		Center Bearing Support	538659
MITSUBISHI (GAC)							
ASX							
2.0 (123 kw)	2012.11-		Centre	SUV FWD 4B11		Center Bearing Support Kit	539907S
	2012.11-		Centre	SUV 4WD 4B11		Center Bearing Support Kit	539907S

	YEAR	TRANSM.	FITTING POSITION	BODY STYLE & DRIVE TYPE & ENGINE	REMARKS	PRODUCT	GSP Ref.
MITSUBISHI (GAC)							
Outlander							
2.4 (141 kw)	2016.09-		Centre	SUV 4WD 4J12		Center Bearing Support Kit	539907S
	2018.11-		Centre	SUV FWD 4J12		Center Bearing Support Kit	539907S
NISSAN							
300ZX							
3.0 (197 kw)	1990.01-1995.10		-	Coupe RWD VG30DTT		Center Bearing Support Kit	539945S
3.0 (208 kw)	1990.01-1996.08		-	Coupe RWD VG30DTT		Center Bearing Support Kit	539945S
Armada							
5.6 (227 kw)	2003.08-2006.12	AT	Rear	Closed Off-Road Vehicle RWD VK56DE	Model year from:2005	Propshaft	PS901593
5.6 (233 kw)	2006.09-2015.12	AT	Front	Closed Off-Road Vehicle 4WD VK56DE		Propshaft	PS901594
5.6 (235 kw)	2011.01-2015.12	AT	Front	Closed Off-Road Vehicle 4WD VK56DE		Propshaft	PS901594
5.6 (236 kw)	2006.09-2015.12	AT	Front	Closed Off-Road Vehicle 4WD VK56DE		Propshaft	PS901594
5.6 (265 kw)	2010.01-2015.12	AT	Front	Closed Off-Road Vehicle 4WD VK56DE		Propshaft	PS901594
Camiones							
2.5 (59 kw)	1996.10-2008.03		Centre	Pickup 4WD TD25		Center Bearing Support	538632
	1996.10-2008.03		Centre	Pickup 4WD TD25		Center Bearing Support Kit	538692S
D21							
2.7 (73 kw)	1987.08-1998.08		Centre	Pickup 4WD TD27		Center Bearing Support	538632
Fairlady Z							
3.0 (208 kw)	1990.01-1996.08		-	Coupe RWD VG30DTT		Center Bearing Support Kit	539945S
Frontier							
4.0 (192 kw)	2011.01-	MT	Rear	Pickup 4WD VQ40	Model year to:2019	Propshaft	PS900563
Interstar							
2.3 (96 kw)	2021.11-		Centre	Chassis Cabin RWD M9T710		Center Bearing Support	539910S
	2021.11-		Centre	Van RWD M9T710		Center Bearing Support	539910S
	2021.11-		Front;Rear	Chassis Cabin RWD M9T710		Flexible Coupling	533884
	2021.11-		Front;Rear	Van RWD M9T710		Flexible Coupling	533884
2.3 (107 kw)	2021.11-		Centre	Chassis Cabin RWD M9T710		Center Bearing Support	539910S
	2021.11-		Centre	Van RWD M9T710		Center Bearing Support	539910S
	2021.11-		Front;Rear	Chassis Cabin RWD M9T710		Flexible Coupling	533884
	2021.11-		Front;Rear	Van RWD M9T710		Flexible Coupling	533884
2.3 (120 kw)	2021.11-		Centre	Chassis Cabin RWD M9T710		Center Bearing Support	539910S
	2021.11-		Centre	Van RWD M9T710		Center Bearing Support	539910S
	2021.11-		Front;Rear	Chassis Cabin RWD M9T710		Flexible Coupling	533884
	2021.11-		Front;Rear	Van RWD M9T710		Flexible Coupling	533884
Largo							
2.0 (77 kw)	1995.08-1999.06		Centre	MPV 4WD CD20ETi		Center Bearing Support Kit	539078S
2.4 (107 kw)	1993.05-1999.06		Centre	MPV 4WD KA24DE		Center Bearing Support Kit	539078S
Murano							
3.5 (170 kw)	2006.01-2008.09	CVT	Rear	SUV 4WD VQ35DE	Model year to:2007	Propshaft	PS900433
3.5 (172 kw)	2004.09-2009.12	CVT	Rear	SUV 4WD VQ35DE	Model year from:2005,Model year to:2007	Propshaft	PS900433
3.5 (176 kw)	2002.07-2009.04	CVT	Rear	SUV 4WD VQ35DE	Model year from:2005,Model year to:2007	Propshaft	PS900433
3.5 (180 kw)	2004.11-2008.06	CVT	Rear	SUV 4WD VQ35DE	Model year from:2005,Model year to:2007	Propshaft	PS900433
3.5 (183 kw)	2003.08-2007.12	CVT	Rear	SUV 4WD VQ35DE	Model year from:2005	Propshaft	PS900433
3.5 (198 kw)	2009.01-2010.12		Rear	SUV 4WD VQ35DE		Propshaft	PS901596
Navara							
2.3 (120 kw)	2015.01-	MT	Front	Chassis Cabin 4WD YS23DDT		Propshaft	PS901893
	2015.01-2020.11	MT	Front	Pickup 4WD YS23DDT		Propshaft	PS901893
2.3 (140 kw)	2015.01-	AT	Front	Pickup 4WD YS23DDTT		Propshaft	PS901882
	2015.01-	MT	Front	Pickup 4WD YS23DDTT		Propshaft	PS901893
2.5 (76 kw)	1998.05-2001.10		Centre	Pickup 4WD TD25TI		Center Bearing Support	538632
2.5 (98 kw)	2001.11-2012.12	5MT	Front	Pickup 4WD YD25DDTI	Date to:2012.12	Propshaft	PS900434
	2001.11-2012.12	AT	Front	Pickup 4WD YD25DDTI	Model year from:2005,Model year to:2019	Propshaft	PS901594
	2001.11-2012.12		Centre	Pickup 4WD YD25DDTI		Center Bearing Support	538632
	2001.11-2012.12		Centre	Pickup 4WD YD25DDTI		Center Bearing Support Kit	538683S
	2002.02-		Centre	Platform/Chassis 4WD YD25DDTi		Center Bearing Support	538632
	2002.02-		Centre	Platform/Chassis RWD YD25DDTi, YD25ETI		Center Bearing Support	538632
	2002.02-		Centre	Platform/Chassis RWD YD25DDTi, YD25ETI		Center Bearing Support Kit	538692S
2.5 (106 kw)	2005.07-	MT	Rear	Pickup RWD YD25DDTI		Propshaft	PS900594
	2006.12-	MT	Front	Pickup 4WD YD25DDTI		Propshaft	PS900434
	2008.08-	MT	Front	Chassis Cabin 4WD YD25DDTI		Propshaft	PS900434
2.5 (120 kw)	2007.08-	MT	Rear	Pickup RWD YD25DDTI		Propshaft	PS900594
	2014.07-	MT	Front	Pickup 4WD YD25DDTI		Propshaft	PS901893
2.5 (124 kw)	2014.07-	MT	Front	Pickup 4WD QR25DE		Propshaft	PS901893
	2014.07-	MT	Rear	Pickup 4WD QR25DE	Model year to:2019	Propshaft	PS900563

	YEAR	TRANSM.	FITTING POSITION	BODY STYLE & DRIVE TYPE & ENGINE	REMARKS	PRODUCT	GSP Ref.
NISSAN							
Navara							
2.5 (126 kw)	2006.10-	MT	Front	Pickup 4WD YD25DDTI		Propshaft	PS900434
2.5 (128 kw)	2005.05-	AT/MT	Front	Pickup 4WD YD25DDTI		Propshaft	PS900434
	2005.12-	MT	Rear	Pickup RWD YD25DDTI		Propshaft	PS900594
2.5 (140 kw)	2009.12-	AT/MT	Front	Pickup 4WD YD25DDTI		Propshaft	PS900434
	2010.03-	AT	Front	Chassis Cabin 4WD YD25DDTI		Propshaft	PS900434
	2014.07-	MT	Front	Pickup 4WD YD25DDTI		Propshaft	PS901893
2.7 (63 kw)	1990.01-1997.04		Centre	Pickup 4WD TD27		Center Bearing Support	538632
3.0 (170 kw)	2010.02-	AT	Front	Pickup 4WD V9X		Propshaft	PS900434
	2010.03-	AT	Front	Chassis Cabin 4WD V9X		Propshaft	PS900434
4.0 (198 kw)	2004.10-	MT	Rear	Pickup 4WD VQ40	Model year from:2005,Model year to:2019	Propshaft	PS900563
Navara/Frontier/Skystar/Datsun							
2.5 (96 kw)	2008.01-	AT	Front	Pickup 4WD YD25DDTi	Model year to:2019	Propshaft	PS901594
2.5 (98 kw)	2001.11-		Centre	Pickup 4WD YD25DDTi		Center Bearing Support	538632
NP300							
2.3 (116 kw)	2015.07-	AT	Rear	Pickup 4WD YS23DDT		Propshaft	PS900564
2.5 (98 kw)	2008.04-		Centre	Pickup 4WD YD25DDTI		Center Bearing Support	538632
	2008.04-		Centre	Pickup RWD YD25DDTI		Center Bearing Support	538632
	2008.04-		Centre	Pickup 4WD YD25DDTI		Center Bearing Support Kit	538683S
	2008.04-		Centre	Pickup RWD YD25DDTI		Center Bearing Support Kit	538683S
	2008.04-		Centre	Pickup RWD YD25DDTI		Center Bearing Support Kit	538692S
NP300 Frontier							
2.5 (140 kw)	2014.11-	MT	Front	Pickup 4WD YD25DDTI		Propshaft	PS901893
NP300 Navara							
2.3 (118 kw)	2019.01-	AT	Rear	Pickup 4WD YS23DDT		Propshaft	PS900564
2.3 (120 kw)	2015.11-	MT	Front	Pickup 4WD YS23DDT		Propshaft	PS901893
	2015.11-	MT	Front	Chassis Cabin 4WD YS23DDT		Propshaft	PS901893
	2015.11-	AT	Rear	Pickup 4WD YS23DDT		Propshaft	PS900564
2.3 (140 kw)	2015.11-	AT	Front	Pickup 4WD YS23DDTT		Propshaft	PS901882
	2015.11-	MT	Front	Pickup 4WD YS23DDTT		Propshaft	PS901893
	2015.11-	AT	Rear	Pickup 4WD YS23DDTT		Propshaft	PS900564
2.5 (140 kw)	2014.07-	MT	Front	Pickup 4WD YD25DDTI		Propshaft	PS901893
4.0 (195 kw)	2009.09-	MT	Rear	Pickup 4WD VQ40/VQ40DE	Model year to:2019	Propshaft	PS900563
NV400							
2.3 (74 kw)	2011.11-2016.09		Centre	Bus FWD M9T670/M9T672/M9T676/M9T870		Center Bearing Support	539910S
	2011.11-2016.09		Centre	Van FWD M9T670/M9T672/M9T676/M9T870		Center Bearing Support	539910S
	2011.11-2016.09		Centre	Chassis Cabin FWD M9T670/M9T672/M9T676/M9T870		Center Bearing Support	539910S
2.3 (81 kw)	2014.06-		Centre	Van FWD M9T704/M9T870		Center Bearing Support	539910S
	2014.06-		Centre	Bus FWD M9T704/M9T870		Center Bearing Support	539910S
	2014.06-		Centre	Chassis Cabin FWD M9T704/M9T870		Center Bearing Support	539910S
2.3 (92 kw)	2011.11-2016.09		Centre	Bus FWD M9T670/M9T672/M9T676/M9T680/M9T870/M9T872/M9T880/M9T882		Center Bearing Support	539910S
	2011.11-2016.09		Centre	Van FWD M9T670/M9T672/M9T676/M9T680/M9T872/M9T880/M9T882		Center Bearing Support	539910S
	2011.11-2016.09		Centre	Van RWD M9T686/M9T690/M9T692/M9T696/M9T698/M9T870/M9T890/M9T896/M9T898		Center Bearing Support	539910S
	2011.11-2016.09		Centre	Chassis Cabin FWD M9T670/M9T672/M9T676/M9T680/M9T870/M9T872/M9T880/M9T882		Center Bearing Support	539910S
	2011.11-2016.09		Centre	Chassis Cabin RWD M9T686/M9T690/M9T692/M9T696/M9T698/M9T890/M9T898		Center Bearing Support	539910S
	2011.11-2016.09		Front	Van RWD M9T686/M9T690/M9T692/M9T696/M9T698/M9T870/M9T890/M9T896/M9T898	Engine Code:M9T 690,M9T 686,M9T 896,M9T 696,M9T 698,M9T 692	Flexible Coupling	533884
	2011.11-2016.09		Front	Chassis Cabin RWD M9T686/M9T690/M9T692/M9T696/M9T698/M9T890/M9T898	Engine Code:M9T 690,M9T 686,M9T 698,M9T 696,M9T 692	Flexible Coupling	533884
2.3 (96 kw)	2016.09-		Centre	Van FWD M9T704		Center Bearing Support	539910S
	2016.09-		Centre	Chassis Cabin FWD M9T704		Center Bearing Support	539910S
	2016.09-		Centre	Chassis Cabin RWD M9T710		Center Bearing Support	539910S
	2016.09-		Centre	Van RWD M9T710		Center Bearing Support	539910S
	2016.09-		Front	Chassis Cabin RWD M9T710		Flexible Coupling	533884
	2016.09-		Front	Van RWD M9T710		Flexible Coupling	533884
2.3 (100 kw)	2014.06-		Centre	Van RWD M9T700		Center Bearing Support	539910S
	2014.06-		Centre	Bus FWD M9T702		Center Bearing Support	539910S
	2014.06-		Centre	Chassis Cabin RWD M9T696/M9T698/M9T700		Center Bearing Support	539910S
	2014.06-		Centre	Chassis Cabin FWD M9T702/M9T716		Center Bearing Support	539910S
	2014.06-		Centre	Van FWD M9T702/M9T716		Center Bearing Support	539910S
	2014.06-		Front	Van RWD M9T700		Flexible Coupling	533884
	2014.06-		Front	Chassis Cabin RWD M9T696/M9T698/M9T700		Flexible Coupling	533884
2.3 (107 kw)	2011.11-		Centre	Bus FWD M9T678/M9T680/M9T706/M9T708		Center Bearing Support	539910S
	2011.11-		Centre	Van FWD M9T678/M9T680/M9T706		Center Bearing Support	539910S
	2011.11-		Centre	Van RWD M9T694/M9T696/M9T698/M9T710		Center Bearing Support	539910S
	2011.11-		Centre	Chassis Cabin FWD M9T678/M9T680/M9T706		Center Bearing Support	539910S
	2011.11-		Centre	Chassis Cabin RWD M9T694/M9T696/M9T698/M9T710		Center Bearing Support	539910S

	YEAR	TRANSM.	FITTING POSITION	BODY STYLE & DRIVE TYPE & ENGINE	REMARKS	PRODUCT	GSP Ref.
NISSAN							
NV400							
2.3 (107 kw)	2011.11-		Front	Van RWD M9T694/M9T696/M9T698/M9T710		Flexible Coupling	533884
	2011.11-		Front	Chassis Cabin RWD M9T694/M9T696/M9T698/M9T710		Flexible Coupling	533884
2.3 (110 kw)	2014.02-		Centre	Van RWD M9T880		Center Bearing Support	539910S
	2014.02-		Centre	Bus FWD M9T716/M9T880		Center Bearing Support	539910S
	2014.02-		Centre	Van FWD M9T716/M9T880		Center Bearing Support	539910S
	2014.02-		Front	Van RWD M9T880		Flexible Coupling	533884
	2014.08-		Centre	Chassis Cabin RWD M9T880		Center Bearing Support	539910S
	2014.08-		Centre	Chassis Cabin FWD M9T716/M9T880		Center Bearing Support	539910S
	2014.08-		Front	Chassis Cabin RWD M9T880		Flexible Coupling	533884
2.3 (120 kw)	2014.06-		Centre	Van RWD M9T700/M9T710		Center Bearing Support	539910S
	2014.06-		Centre	Chassis Cabin RWD M9T700/M9T710		Center Bearing Support	539910S
	2014.06-		Centre	Bus FWD M9T702		Center Bearing Support	539910S
	2014.06-		Centre	Van FWD M9T702		Center Bearing Support	539910S
	2014.06-		Centre	Chassis Cabin FWD M9T702		Center Bearing Support	539910S
	2014.06-		Front	Van RWD M9T700/M9T710		Flexible Coupling	533884
	2014.06-		Front	Chassis Cabin RWD M9T700/M9T710		Flexible Coupling	533884
2.3 (125 kw)	2015.05-		Centre	Bus FWD M9T706		Center Bearing Support	539910S
	2016.09-		Centre	Chassis Cabin FWD M9T706		Center Bearing Support	539910S
	2016.09-		Centre	Van FWD M9T706		Center Bearing Support	539910S
2.3 (132 kw)	2019.11-		Centre	Chassis Cabin FWD M9T716		Center Bearing Support	539910S
	2019.11-		Centre	Van FWD M9T716		Center Bearing Support	539910S
	2019.11-		Centre	Bus FWD M9T716		Center Bearing Support	539910S
Pathfinder							
2.5 (120 kw)	2005.01-2010.06		Front	SUV 4WD YD25DDTI	Date to:2010.06	Propshaft	PS900434
	2005.01-2010.06	MT	Rear	SUV 4WD YD25DDTI		Propshaft	PS901675
2.5 (126 kw)	2006.09-2014.08		Front	SUV 4WD YD25DDTI	Date to:2014.08	Propshaft	PS900434
	2006.09-2014.08	MT	Rear	SUV 4WD YD25DDTI		Propshaft	PS901675
2.5 (128 kw)	2005.01-2010.01		Front	SUV 4WD YD25DDTI	Date to:2010.06	Propshaft	PS900434
	2005.01-2010.01	AT	Front	SUV RWD YD25DDTI	Date to:2010.06	Propshaft	PS900434
	2005.01-2010.01	MT	Rear	SUV 4WD YD25DDTI		Propshaft	PS901675
2.5 (140 kw)	2010.07-2014.08		Front	SUV 4WD YD25DDTI	Date to:2014.08	Propshaft	PS900434
	2010.07-2014.08	MT	Rear	SUV 4WD YD25DDTI		Propshaft	PS901675
3.3 (110 kw)	1995.12-2000.10	AT	Front	Terrain cab wagon closed 4WD VG33E		Propshaft	PS900436
3.3 (125 kw)	1995.12-2005.07	AT	Front	Terrain cab wagon closed 4WD VG33E	Model year to:2000	Propshaft	PS900436
	1995.12-2005.07		Centre	Terrain cab wagon closed 4WD VG33E		Center Bearing Support	538644
3.5 (162 kw)	2000.02-2004.12	AT	Front	Terrain cab wagon closed 4WD VQ35DE		Propshaft	PS900436
	2000.02-2004.12	MT	Rear	Terrain cab wagon closed 4WD VQ35DE		Propshaft	PS901597
	2000.02-2004.12	4AT	Rear	Terrain cab wagon closed 4WD VQ35DE		Joint,propshaft	801298
	2000.02-2004.12		Centre	Terrain cab wagon closed 4WD VQ35DE		Center Bearing Support	538644
3.5 (179 kw)	2001.08-2004.07	AT	Front	Closed Off-Road Vehicle 4WD VQ35DE		Propshaft	PS900436
3.5 (187 kw)	2013.10-	AT	Rear	SUV 4WD VQ35DE	Model year to:2020	Propshaft	PS901599
4.0 (198 kw)	2005.01-2014.08	AT	Front	SUV 4WD VQ40DE	Date to:2014.08;for OE No.:37200-5X30A	Propshaft	PS900434
	2005.01-2014.08	AT	Front	SUV 4WD VQ40DE	Model year to:2012;for OE No.:37200-7S100	Propshaft	PS901594
	2005.01-2014.08	AT	Rear	SUV 4WD VQ40DE	Model year to:2010;for OE No.:37300-ZP81A	Propshaft	PS900435
	2005.01-2014.08	AT	Rear	SUV 4WD VQ40DE	for OE No.:37300-EA500	Propshaft	PS901598
	2005.01-2014.08	MT	Rear	SUV 4WD VQ40DE		Propshaft	PS901675
4.0 (214 kw)	2010.01-2014.08	AT	Front	SUV 4WD VQ40DE	Model year to:2012	Propshaft	PS901594
Pathfinder/Terrano							
3.3 (125 kw)	1997.09-2004.12		Centre	Closed Off-Road Vehicle 4WD VG33E		Center Bearing Support	538644
Pick Up							
2.7 (73 kw)	1987.09-1996.12		Centre	Pickup 4WD TD27T		Center Bearing Support	538632
Pick Up (D22)							
2.5 (61 kw)	1998.02-2001.10		Centre	Pickup 4WD TD25		Center Bearing Support	538632
2.5 (98 kw)	2002.03-		Centre	Pickup 4WD YD25DDTI		Center Bearing Support	538632
	2002.03-		Centre	Pickup RWD YD25DDTI	Outer diameter:122mm	Center Bearing Support	538632
	2002.03-		Centre	Pickup RWD YD25DDTI	Outer diameter:110mm	Center Bearing Support	538644
	2002.03-		Centre	Pickup RWD YD25DDTI		Center Bearing Support Kit	538692S
3.2 (76 kw)	1997.01-2012.12		Centre	Pickup 4WD QD32		Center Bearing Support	538632
	1997.01-2012.12		Centre	Pickup 4WD QD32		Center Bearing Support Kit	538683S
Pick Up (King Cab)							
2.4 (76 kw)	1985.09-1994.05	MT	Rear	Pickup RWD Z24	Model year from:1991,Model year to:1993	Propshaft	PS901691
2.4 (79 kw)	1992.01-1996.12		Centre	Pickup RWD Z24/Z24I		Center Bearing Support	538632
2.4 (88 kw)	1998.02-2001.10		Centre	Pickup 4WD KA24E		Center Bearing Support	538632
	1998.02-2001.10		Centre	Pickup RWD KA24E		Center Bearing Support	538632

	YEAR	TRANSM.	FITTING POSITION	BODY STYLE & DRIVE TYPE & ENGINE	REMARKS	PRODUCT	GSP Ref.
NISSAN							
Pick Up (King Cab)							
2.4 (91 kw)	1992.04-1998.02		Centre	Pickup RWD KA24E		Center Bearing Support	538632
2.4 (93 kw)	1992.05-1998.01		Centre	Pickup 4WD KA24E		Center Bearing Support	538632
2.4 (98 kw)	2001.11-2005.04		Centre	Pickup 4WD KA24DE		Center Bearing Support	538632
	2001.11-2005.04		Centre	Pickup 4WD KA24DE		Center Bearing Support Kit	538692S
2.5 (59 kw)	1987.08-1998.02		Centre	Pickup 4WD TD25		Center Bearing Support	538632
	1987.08-1998.02		Centre	Pickup 4WD TD25		Center Bearing Support Kit	538692S
2.5 (61 kw)	1992.08-1998.02		Centre	Pickup RWD TD25		Center Bearing Support	538632
	1992.08-1998.02		Centre	Pickup RWD TD25		Center Bearing Support	538644
	1996.03-1998.02		Centre	Pickup 4WD TD25		Center Bearing Support	538632
	1998.02-2001.10		Centre	Pickup RWD TD25	Outer diameter:122mm	Center Bearing Support	538632
	1998.02-2001.10		Centre	Pickup RWD TD25	Outer diameter:110mm	Center Bearing Support	538644
2.5 (76 kw)	1998.05-2001.10		Centre	Pickup 4WD TD25TI		Center Bearing Support	538632
	1998.05-2001.10		Centre	Pickup 4WD TD25TI		Center Bearing Support Kit	538692S
2.5 (98 kw)	2002.03-2012.12		Centre	Pickup 4WD YD25DDTI		Center Bearing Support	538632
	2002.03-2012.12		Centre	Pickup RWD YD25DDTI	Outer diameter:122mm	Center Bearing Support	538632
	2002.03-2012.12		Centre	Pickup RWD YD25DDTI	Outer diameter:110mm	Center Bearing Support	538644
	2002.03-2012.12		Centre	Pickup RWD YD25DDTI		Center Bearing Support Kit	538692S
Pick Up/Datsun							
2.5 (55 kw)	1987.09-1998.02		Centre	Pickup RWD TD25		Center Bearing Support	538632
	1987.09-1998.02		Centre	Pickup RWD TD25		Center Bearing Support	538644
2.5 (57 kw)	1986.01-1998.02		Centre	Pickup RWD SD25		Center Bearing Support	538632
2.7 (73 kw)	1987.08-1998.02		Centre	Pickup 4WD TD27(08.87-)		Center Bearing Support	538632
	1987.08-1998.02		Centre	Pickup 4WD TD27(08.87-)		Center Bearing Support Kit	538692S
Qashqai							
1.6 (96 kw)	2011.07-2014.04	6MT	Rear	SUV 4WD R9M		Propshaft	PS900562
	2011.07-2014.04		Centre	SUV 4WD R9M		Center Bearing Support Kit	538683S
2.0 (104 kw)	2007.02-2014.04	MT	Rear	SUV 4WD MR20DE	Model:Qashqai	Propshaft	PS900445
	2007.02-2014.04		Centre	SUV 4WD MR20DE		Center Bearing Support Kit	538683S
2.0 (110 kw)	2006.10-2014.04	AT	Rear	SUV 4WD M9R		Propshaft	PS900562
	2006.10-2014.04		Centre	SUV 4WD M9R		Center Bearing Support	538644
	2006.10-2014.04		Centre	SUV FWD M9R		Center Bearing Support	538644
	2006.10-2014.04		Centre	SUV 4WD M9R		Center Bearing Support Kit	538683S
Qashqai+2							
1.6 (96 kw)	2011.07-2013.11	6AT/6MT	Rear	SUV 4WD R9M	For Model code: Qashqai+2	Propshaft	PS901683
	2011.07-2013.11		Centre	SUV 4WD R9M		Center Bearing Support Kit	538683S
2.0 (103 kw)	2010.01-2014.04	6MT/CVT	Rear	SUV 4WD MR20DE		Propshaft	PS901686
2.0 (104 kw)	2008.08-2014.04	6MT/CVT	Rear	SUV 4WD MR20DE	Model:Qashqai+2,Date from:2008.08	Propshaft	PS901686
	2008.08-2014.04		Centre	SUV 4WD MR20DE		Center Bearing Support Kit	538683S
2.0 (110 kw)	2008.08-2013.11	6AT/6MT	Rear	SUV 4WD M9R	Date from:2008.08,For Model code: Qashqai+2	Propshaft	PS901683
	2008.08-2013.11		Centre	SUV 4WD M9R		Center Bearing Support	538644
	2008.08-2013.11		Centre	SUV FWD M9R		Center Bearing Support	538644
	2008.08-2013.11		Centre	SUV 4WD M9R		Center Bearing Support Kit	538683S
Rogue							
2.5 (124 kw)	2010.01-2013.11	CVT	Rear	SUV 4WD QR25DE		Propshaft	PS900437
2.5 (125 kw)	2010.01-2013.11	CVT	Rear	SUV 4WD QR25DE		Propshaft	PS900437
2.5 (127 kw)	2007.09-2014.02	CVT	Rear	SUV 4WD QR25DE	Model year from:2008	Propshaft	PS900437
Serena							
1.6 (71 kw)	1993.02-2001.09	MT	Front	MPV RWD GA16DE	for OE No.:370007C003	Propshaft	PS900442
	1993.02-2001.09	MT	Rear	MPV RWD GA16DE	for OE No.:370007C002	Propshaft	PS900441
2.0 (49 kw)	1992.07-1994.09	MT	Front	MPV RWD LD20	Date from:1992.07,Date to:1994.09	Propshaft	PS900439
2.3 (55 kw)	1994.10-2001.09	MT	Front	MPV RWD LD23	for OE No.:370007C001	Propshaft	PS900439
	1994.10-2001.09	MT	Front	MPV RWD LD23	for OE No.:370007C003	Propshaft	PS900442
Silvia							
2.0 (118 kw)	1999.06-2002.08		Centre	Coupe RWD SR20DE		Center Bearing Support Kit	538683S
2.0 (121 kw)	1999.06-2002.08		Centre	Coupe RWD SR20DE		Center Bearing Support Kit	538683S
Sunny							
2.0 (162 kw)	1990.10-1995.06		Centre	Hatchback 4WD SR20DET		Center Bearing Support Kit	538683S
Sunny Estate/Wagon							
1.6 (66 kw)	1990.11-1995.05		Centre	Estate 4WD GA16DE/GA16DS		Center Bearing Support Kit	538683S
1.6 (75 kw)	1992.10-2000.03		Centre	Estate 4WD GA16DE		Center Bearing Support Kit	538683S
Sunny/Pulsar							
1.6 (66 kw)	1990.10-1995.05		Centre	Saloon 4WD GA16DS		Center Bearing Support Kit	538683S

	YEAR	TRANSM.	FITTING POSITION	BODY STYLE & DRIVE TYPE & ENGINE	REMARKS	PRODUCT	GSP Ref.
NISSAN							
Terrano							
2.7 (73 kw)	1989.02-1996.02		Centre	Terrain cab wagon closed 4WD TD27T		Center Bearing Support	538632
3.0 (109 kw)	1989.09-1995.12		Centre	Terrain cab wagon closed 4WD VG30E		Center Bearing Support	538632
	1989.09-1995.12		Centre	Terrain cab wagon closed 4WD VG30E		Center Bearing Support Kit	538692S
Terrano (Pick Up)							
2.5 (76 kw)	1998.05-2001.10		Centre	Pickup 4WD TD25TI		Center Bearing Support	538632
	1998.05-2001.10		Centre	Pickup 4WD TD25TI		Center Bearing Support Kit	538692S
Terrano II							
2.4 (85 kw)	1996.05-2002.01	MT	Rear	Terrain cab wagon closed 4WD KA24E		Propshaft	PS901733
	1996.05-2002.01		Centre	Terrain cab wagon closed 4WD KA24E		Center Bearing Support	538632
2.4 (87 kw)	1996.05-2005.11	MT	Rear	Terrain cab wagon closed 4WD KA24E	Date to:2005.11	Propshaft	PS901733
	1996.05-2005.11		Centre	Terrain cab wagon closed 4WD KA24E		Center Bearing Support	538632
2.4 (91 kw)	1993.02-1997.12	MT	Rear	Terrain cab wagon closed 4WD KA24E		Propshaft	PS901733
	1993.02-1997.12		Centre	Terrain cab wagon closed 4WD KA24E		Center Bearing Support	538632
2.7 (74 kw)	1993.02-2002.02	MT	Rear	Terrain cab wagon closed 4WD TD27T	Model:Terrano II	Propshaft	PS901733
	1993.02-2002.02		Centre	Terrain cab wagon closed 4WD TD27T		Center Bearing Support	538632
2.7 (92 kw)	1996.01-2006.12	MT	Rear	Terrain cab wagon closed 4WD TD27T/TD27TI	Date to:2006.12	Propshaft	PS901733
	1996.01-2006.12		Centre	Terrain cab wagon closed 4WD TD27T/TD27TI		Center Bearing Support	538632
3.0 (113 kw)	2002.03-2006.04	MT	Rear	Terrain cab wagon closed 4WD ZD30	Date to:2006.04	Propshaft	PS901733
	2002.03-2006.04		Centre	Terrain cab wagon closed 4WD ZD30		Center Bearing Support	538632
Terrano II Van							
2.7 (92 kw)	1998.06-2007.09	MT	Rear	Van 4WD TD27TI	Date to:2005.11	Propshaft	PS901733
Titan							
5.0 (231 kw)	2015.09-	AT	Front	Pickup 4WD CEV8D1	Model year to:2019	Propshaft	PS901602
5.6 (227 kw)	2003.10-2007.12	5AT	Front	Pickup 4WD VK56DE	Model year to:2015	Propshaft	PS901594
	2004.01-2006.12	AT	Front	Pickup 4WD VK56DE	Model year from:2005	Propshaft	PS901594
5.6 (236 kw)	2008.01-	5AT	Front	Pickup 4WD VK56DE	Model year to:2015	Propshaft	PS901594
5.6 (237 kw)	2007.01-	AT	Front	Pickup 4WD VK56DE	Model year to:2015	Propshaft	PS901594
5.6 (291 kw)	2015.09-	AT	Front	Pickup 4WD VK56VD	Medium wheelbase	Propshaft	PS901603
5.6 (298 kw)	2019.09-	AT	Front	Pickup 4WD VK56VD	Medium wheelbase	Propshaft	PS901603
Urvan							
2.5 (59 kw)	1988.12-1997.05		Centre	Van RWD TD25		Center Bearing Support	538632
	1989.05-1996.10		Centre	Bus RWD TD25		Center Bearing Support	538632
Vanette Cargo							
1.6 (71 kw)	1994.09-2001.05	MT	Front	Van RWD GA16DE	for OE No.:370007C001	Propshaft	PS900439
	1994.09-2001.05	MT	Front	Van RWD GA16DE	for OE No.:370007C003	Propshaft	PS900442
	1994.09-2001.05	MT	Rear	Van RWD GA16DE	for OE No.:370007C002	Propshaft	PS900441
1.6 (72 kw)	1996.01-2001.05	MT	Front	Bus RWD GA16DE	for OE No.:370007C001	Propshaft	PS900439
	1996.01-2001.05	MT	Front	Bus RWD GA16DE	for OE No.:370007C003	Propshaft	PS900442
	1996.01-2001.05	MT	Rear	Bus RWD GA16DE	for OE No.:370007C002	Propshaft	PS900441
2.3 (55 kw)	1994.09-2001.05	MT	Front	Bus RWD LD23	Model:Vanette Cargo;for OE No.:370007C001	Propshaft	PS900439
	1994.09-2001.05	MT	Front	Bus RWD LD23	Model:Vanette Cargo;for OE No.:370007C003	Propshaft	PS900442
	1994.09-2001.05	5MT	Rear	Bus RWD LD23	Model:Vanette Cargo;for OE No.:370007C002	Propshaft	PS900441
	1994.09-2002.05	MT	Front	Van RWD LD23	Model:Vanette Cargo;for OE No.:370007C001	Propshaft	PS900439
	1994.09-2002.05	MT	Front	Van RWD LD23	Model:Vanette Cargo;for OE No.:370007C003	Propshaft	PS900442
	1994.09-2002.05	MT	Rear	Van RWD LD23	Model:Vanette Cargo;for OE No.:370007C002	Propshaft	PS900441
Vanette Serena							
2.0 (49 kw)	1991.06-1994.08	MT	Front	MPV RWD LD20	Date from:1992.07,Date to:1994.09,Construction Type:Serena	Propshaft	PS900439
X-Trail							
1.7 (96 kw)	2019.04-	CVT	Rear	SUV 4WD R9N	Date to:2020.10	Propshaft	PS901915
1.7 (110 kw)	2019.04-	CVT	Rear	SUV 4WD R9N	Date to:2020.10	Propshaft	PS901915
1.7 (120 kw)	2019.04-	CVT	Rear	SUV 4WD R9N	Date to:2020.10	Propshaft	PS901915
2.0 (103 kw)	2001.07-2008.12	AT/MT	Rear	SUV 4WD QR20DE		Propshaft	PS900447
	2008.06-2013.12		Centre	SUV 4WD MR20DE		Center Bearing Support Kit	538683S
2.0 (104 kw)	2007.06-2014.02		Centre	SUV 4WD MR20DE		Center Bearing Support Kit	538683S
2.0 (106 kw)	2014.12-	CVT	Rear	SUV 4WD MR20DD	Model year from:2017,Model year to:2022	Propshaft	PS901600
2.0 (108 kw)	2013.12-	CVT	Rear	SUV 4WD MR20DD	Model year from:2017,Model year to:2022	Propshaft	PS901600
2.0 (110 kw)	2001.09-2007.05	AT/MT	Rear	SUV 4WD QR20DE		Propshaft	PS900447
2.0 (130 kw)	2016.10-	CVT	Rear	SUV 4WD M9R	Date to:2018.11	Propshaft	PS901915
2.0 (132 kw)	2014.09-	CVT	Rear	SUV 4WD MR20DD	Model year from:2017,Model year to:2018	Propshaft	PS901601
2.0 (138 kw)	2016.11-	CVT	Rear	SUV 4WD MR20DD, RM31	Model year from:2017,Model year to:2018	Propshaft	PS901601
2.5 (121 kw)	2001.09-2007.05	AT/MT	Rear	SUV 4WD QR25DE		Propshaft	PS900447
2.5 (124 kw)	2014.10-	CVT	Rear	SUV 4WD QR25DE	Model year to:2020	Propshaft	PS901601
2.5 (126 kw)	2014.02-	CVT	Rear	SUV 4WD QR25DE	For OE No.:37000-4BA2A	Propshaft	PS900438
	2014.02-	CVT	Rear	SUV 4WD QR25DE	Model year to:2020;USA built;for OE No.:37000-4BA0A	Propshaft	PS901601

	YEAR	TRANSM.	FITTING POSITION	BODY STYLE & DRIVE TYPE & ENGINE	REMARKS	PRODUCT	GSP Ref.
NISSAN							
X-Trail							
2.5 (127 kw)	2013.10-	CVT	Rear	SUV 4WD QR25DE	Model year to:2020	Propshaft	PS901601
2.5 (132 kw)	2002.09-2008.12	MT	Rear	SUV 4WD QR25DE		Propshaft	PS900447
	2007.09-2014.02	CVT	Rear	SUV 4WD QR25DE		Propshaft	PS900446
2.5 (134 kw)	2001.09-2007.02	AT/MT	Rear	SUV 4WD QR25DE		Propshaft	PS900447
Xterra							
4.0 (195 kw)	2011.01-	AT	Front	SUV 4WD VQ40DE		Propshaft	PS901594
4.0 (198 kw)	2005.01-	5AT	Front	SUV 4WD VQ40DE		Propshaft	PS901594
	2005.01-		Rear	SUV 4WD VQ40DE		Joint,propshaft	801298
4.0 (214 kw)	2010.01-	AT	Front	SUV 4WD VQ40DE		Propshaft	PS901594
OLDSMOBILE							
Bravada							
4.2 (201 kw)	2001.09-2003.12		Front	SUV 4WD LL8(254CUL6)	Model year from:2002	Propshaft	PS900188
	2001.09-2003.12		Front	SUV 4WD LL8(254CUL6)	RPO Code:NP8	Joint,propshaft	608073
4.3 (142 kw)	1995.09-1998.12	AT	Front	SUV 4WD L35(262CUL6)	Model year to:1996	Propshaft	299304
	1995.09-1998.12		Front	SUV 4WD L35(262CUL6)	RPO Code:NP1	Joint,propshaft	608072
	1995.09-1998.12		Front	SUV 4WD L35(262CUL6)	RPO Code:NP8	Joint,propshaft	608073
OPEL							
Antara							
2.0 (93 kw)	2007.03-2011.12	MT	Rear	SUV 4WD Z20DM		Propshaft	PS900182
	2007.03-2011.12		Centre	SUV 4WD Z20DM		Center Bearing Support	538642
	2008.09-2011.12		Centre	SUV FWD Z20DM		Center Bearing Support	538642
2.0 (110 kw)	2006.08-2011.12	AT/MT	Rear	SUV 4WD Z20DMH		Propshaft	PS900182
	2006.08-2011.12		Centre	SUV 4WD Z20DMH		Center Bearing Support	538642
	2006.08-2011.12		Centre	SUV FWD Z20DMH		Center Bearing Support	538642
2.0 (125 kw)	2016.01-2017.08	MT	Rear	SUV 4WD B20DTH		Propshaft	PS900182
	2016.01-2017.08		Centre	SUV 4WD B20DTH		Center Bearing Support	538642
	2016.01-2017.08		Centre	SUV FWD B20DTH		Center Bearing Support	538642
2.2 (120 kw)	2010.12-2015.12	MT	Rear	SUV 4WD A22DM		Propshaft	PS900182
	2010.12-2015.12		Centre	SUV FWD A22DM		Center Bearing Support	538642
	2010.12-2015.12		Centre	SUV 4WD A22DM		Center Bearing Support	538642
2.2 (135 kw)	2010.12-2015.12	AT	Rear	SUV 4WD A22DMH		Propshaft	PS900182
	2010.12-2015.12		Centre	SUV 4WD A22DMH		Center Bearing Support	538642
2.4 (103 kw)	2006.08-2010.12	MT	Rear	SUV 4WD Z24XE		Propshaft	PS900182
	2006.08-2010.12		Centre	SUV 4WD Z24XE		Center Bearing Support	538642
	2006.08-2011.12	MT	Rear	SUV 4WD Z24XE		Propshaft	PS900182
	2006.08-2011.12		Centre	SUV 4WD Z24XE		Center Bearing Support	538642
	2008.09-2010.08		Centre	SUV FWD Z24XE		Center Bearing Support	538642
	2008.09-2011.12		Centre	SUV FWD Z24XE		Center Bearing Support	538642
2.4 (104 kw)	2006.08-2011.12		Centre	SUV 4WD Z24XE		Center Bearing Support	538642
2.4 (123 kw)	2010.12-2015.02	MT	Rear	SUV 4WD A24XE/A24XF		Propshaft	PS900182
	2010.12-2015.02		Centre	SUV 4WD A24XE/A24XF		Center Bearing Support	538642
	2010.12-2015.02		Centre	SUV FWD A24XE/A24XF		Center Bearing Support	538642
3.0 (190 kw)	2010.11-2015.12		Centre	SUV 4WD A30XF/A30XH		Center Bearing Support	538642
3.2 (167 kw)	2007.03-2011.12	AT	Rear	SUV 4WD Z32SEE		Propshaft	PS900182
	2007.03-2011.12		Centre	SUV 4WD Z32SEE		Center Bearing Support	538642
Insignia							
2.0 (162 kw)	2008.07-2017.03	AT/MT	Rear	Saloon 4WD A20NHT		Propshaft	PS901748
	2008.07-2017.03	AT/MT	Rear	Hatchback 4WD A20NHT		Propshaft	PS901751
2.0 (184 kw)	2011.07-2017.03	AT/MT	Rear	Hatchback 4WD A20NHT/B20NHT		Propshaft	PS901748
	2011.07-2017.03	AT/MT	Rear	Saloon 4WD A20NFT/A20NHT/B20NHT		Propshaft	PS901748
Insignia Sports Tourer							
2.0 (162 kw)	2008.07-2017.03	AT/MT	Rear	Estate 4WD A20NHT		Propshaft	PS901748
2.0 (184 kw)	2011.07-2017.03	AT/MT	Rear	Estate 4WD A20NHT/B20NHT		Propshaft	PS901748
Mokka							
1.4 (103 kw)	2012.06-	MT	Rear	SUV 4WD A14NET/B14NET		Propshaft	PS900174
1.6 (100 kw)	2015.01-	MT	Rear	SUV 4WD A16DTH/B16DTH		Propshaft	PS900174
1.7 (96 kw)	2012.06-	MT	Rear	SUV 4WD A17DTS		Propshaft	PS900174
Mokka X							
1.4 (103 kw)	2016.06-	MT	Rear	SUV 4WD B14NET/D14NET		Propshaft	PS900174
1.4 (112 kw)	2016.06-	AT	Rear	SUV 4WD B14XFT		Propshaft	PS900174
1.6 (100 kw)	2016.06-	MT	Rear	SUV 4WD B16DTH/D16DTH		Propshaft	PS900174
Movano							
2.3 (74 kw)	2010.05-		Centre	Chassis Cabin RWD M9T690/M9T692/M9T890/M9T892		Center Bearing Support	539910S
	2010.05-		Centre	Van RWD M9T690/M9T692/M9T890/M9T892		Center Bearing Support	539910S

	YEAR	TRANSM.	FITTING POSITION	BODY STYLE & DRIVE TYPE & ENGINE	REMARKS	PRODUCT	GSP Ref.
OPEL							
Movano							
2.3 (74 kw)	2010.05-		Centre	Chassis Cabin FWD M9T670/M9T672/M9T676/M9T870/M9T876		Center Bearing Support	539910S
	2010.05-		Centre	Van FWD M9T670/M9T672/M9T676/M9T870/M9T876		Center Bearing Support	539910S
	2010.05-		Front	Chassis Cabin RWD M9T690/M9T692/M9T890/M9T892		Flexible Coupling	533884
	2010.05-		Front	Van RWD M9T690/M9T692/M9T890/M9T892		Flexible Coupling	533884
	2010.12-		Centre	Bus FWD M9T670/M9T672/M9T676/M9T870/M9T876		Center Bearing Support	539910S
2.3 (81 kw)	2014.05-		Centre	Bus FWD M9T704/M9T870		Center Bearing Support	539910S
	2014.05-		Centre	Chassis Cabin FWD M9T704/M9T870		Center Bearing Support	539910S
	2014.05-		Centre	Van FWD M9T704/M9T870		Center Bearing Support	539910S
2.3 (92 kw)	2010.05-		Centre	Chassis Cabin FWD M9T670/M9T672/M9T676/M9T870/M9T876/M9T880		Center Bearing Support	539910S
	2010.05-		Centre	Chassis Cabin RWD M9T686/M9T690/M9T692/M9T696/M9T890/M9T892/M9T896/M9T898		Center Bearing Support	539910S
	2010.05-		Centre	Van FWD M9T670/M9T672/M9T676/M9T870/M9T876/M9T880		Center Bearing Support	539910S
	2010.05-		Centre	Van RWD M9T686/M9T690/M9T692/M9T890/M9T892/M9T896/M9T898		Center Bearing Support	539910S
	2010.05-		Front	Chassis Cabin RWD M9T686/M9T690/M9T692/M9T696/M9T890/M9T892/M9T896/M9T898		Flexible Coupling	533884
	2010.05-		Front	Van RWD M9T686/M9T690/M9T692/M9T890/M9T892/M9T896/M9T898		Flexible Coupling	533884
	2010.05-		Front;Rear	Van FWD M9T670/M9T672/M9T676/M9T870/M9T876/M9T880		Flexible Coupling	533884
	2010.12-		Centre	Bus FWD M9T670/M9T672/M9T676/M9T870/M9T876/M9T880		Center Bearing Support	539910S
2.3 (96 kw)	2016.11-		Centre	Chassis Cabin RWD M9T710		Center Bearing Support	539910S
	2016.11-		Centre	Van RWD M9T710		Center Bearing Support	539910S
	2016.11-		Centre	Van FWD M9T704		Center Bearing Support	539910S
	2016.11-		Centre	Chassis Cabin FWD M9T704		Center Bearing Support	539910S
	2016.11-		Front	Chassis Cabin RWD M9T710		Flexible Coupling	533884
	2016.11-		Front	Van RWD M9T710		Flexible Coupling	533884
2.3 (100 kw)	2014.05-		Centre	Bus FWD M9T702/M9T716		Center Bearing Support	539910S
	2014.05-		Centre	Chassis Cabin FWD M9T702/M9T716		Center Bearing Support	539910S
	2014.05-		Centre	Chassis Cabin RWD M9T700		Center Bearing Support	539910S
	2014.05-		Centre	Van FWD M9T702/M9T716		Center Bearing Support	539910S
	2014.05-		Centre	Van RWD M9T700		Center Bearing Support	539910S
	2014.05-		Front	Chassis Cabin RWD M9T700		Flexible Coupling	533884
	2014.05-		Front	Van RWD M9T700		Flexible Coupling	533884
2.3 (107 kw)	2010.05-		Centre	Chassis Cabin FWD M9T678/M9T680/M9T706/M9T708/M9T878/M9T880		Center Bearing Support	539910S
	2010.05-		Centre	Chassis Cabin RWD M9T694/M9T696/M9T698/M9T710/M9T894/M9T896/M9T898		Center Bearing Support	539910S
	2010.05-		Centre	Van FWD M9T678/M9T680/M9T706/M9T708/M9T878/M9T880		Center Bearing Support	539910S
	2010.05-		Centre	Van RWD M9T694/M9T696/M9T698/M9T710/M9T894/M9T896/M9T898		Center Bearing Support	539910S
	2010.05-		Front	Chassis Cabin RWD M9T694/M9T696/M9T698/M9T710/M9T894/M9T896/M9T898		Flexible Coupling	533884
	2010.05-		Front	Van RWD M9T694/M9T696/M9T698/M9T710/M9T894/M9T896/M9T898		Flexible Coupling	533884
	2010.12-		Centre	Bus FWD M9T678/M9T680/M9T706/M9T708/M9T878/M9T880		Center Bearing Support	539910S
2.3 (110 kw)	2013.01-		Centre	Bus FWD M9T716/M9T880		Center Bearing Support	539910S
	2013.01-		Centre	Chassis Cabin FWD M9T716/M9T880		Center Bearing Support	539910S
	2013.01-		Centre	Chassis Cabin RWD M9T694/M9T696/M9T698/M9T896/M9T898		Center Bearing Support	539910S
	2013.01-		Centre	Van FWD M9T716/M9T880		Center Bearing Support	539910S
	2013.01-		Centre	Van RWD M9T694/M9T696/M9T698/M9T896/M9T898		Center Bearing Support	539910S
	2013.01-		Front	Chassis Cabin RWD M9T694/M9T696/M9T698/M9T896/M9T898	Engine Code:M9T 698,M9T 696,M9T 694	Flexible Coupling	533884
	2013.01-		Front	Van RWD M9T694/M9T696/M9T698/M9T896/M9T898	Engine Code:M9T 698,M9T 696,M9T 694	Flexible Coupling	533884
2.3 (120 kw)	2014.05-		Centre	Bus FWD M9T702/M9T708		Center Bearing Support	539910S
	2014.05-		Centre	Chassis Cabin FWD M9T702/M9T708		Center Bearing Support	539910S
	2014.05-		Centre	Chassis Cabin RWD M9T700/M9T710		Center Bearing Support	539910S
	2014.05-		Centre	Van FWD M9T702/M9T708		Center Bearing Support	539910S
	2014.05-		Centre	Van RWD M9T700/M9T710		Center Bearing Support	539910S
	2014.05-		Front	Chassis Cabin RWD M9T700/M9T710		Flexible Coupling	533884
	2014.05-		Front	Van RWD M9T700/M9T710		Flexible Coupling	533884
2.3 (125 kw)	2015.05-		Centre	Bus FWD M9T706		Center Bearing Support	539910S
	2016.11-		Centre	Van FWD M9T706		Center Bearing Support	539910S
	2016.11-		Centre	Chassis Cabin FWD M9T706		Center Bearing Support	539910S
2.3 (132 kw)	2019.08-		Centre	Bus FWD M9T716		Center Bearing Support	539910S
	2019.08-		Centre	Chassis Cabin FWD M9T716		Center Bearing Support	539910S
	2019.08-		Centre	Van FWD M9T716		Center Bearing Support	539910S
Omega							
2.0 (85 kw)	1994.09-1999.05		Front	Estate RWD X20SE		Flexible Coupling	510641
	1994.09-1999.05		Front	Estate RWD X20SE		Flexible Coupling Kit	510641S
2.0 (100 kw)	1994.05-1999.05		Front	Estate RWD X20XEV		Flexible Coupling	510641
	1994.05-1999.05		Front	Saloon RWD X20XEV		Flexible Coupling	510641
	1994.05-1999.05		Front	Estate RWD X20XEV		Flexible Coupling Kit	510641S
	1994.05-1999.05		Front	Saloon RWD X20XEV		Flexible Coupling Kit	510641S

	YEAR	TRANSM.	FITTING POSITION	BODY STYLE & DRIVE TYPE & ENGINE	REMARKS	PRODUCT	GSP Ref.
OPEL							
Omega B							
2.0 (85 kw)	1994.03-1999.09		Front	Saloon RWD X 20 SE		Flexible Coupling	510641
	1994.03-1999.09		Front	Saloon RWD X 20 SE		Flexible Coupling Kit	510641S
	1994.03-2000.12		Front	Saloon RWD 20 SE		Flexible Coupling	510641
	1994.03-2000.12		Front	Saloon RWD 20 SE		Flexible Coupling Kit	510641S
PIAGGIO							
Porter							
1.0 (33 kw)	1993.02-1994.06	MT	Front	Platform/Chassis RWD CB41		Propshaft	PS900195
	1993.02-1994.06	MT	Front	Platform/Chassis RWD CB41		Propshaft	PS900196
	1993.02-1994.06	MT	Front	Platform/Chassis RWD CB41		Propshaft	PS900197
	1993.02-1994.06	MT	Front	Platform/Chassis RWD CB41		Propshaft	PS900198
	1993.02-1994.06	MT	Front	Platform/Chassis RWD CB41		Propshaft	PS900199
	1993.02-1998.05	MT	Front	Van RWD CB41		Propshaft	PS900195
	1993.02-1998.05	MT	Front	Van RWD CB41		Propshaft	PS900196
	1993.02-1998.05	MT	Front	Van RWD CB41		Propshaft	PS900197
	1993.02-1998.05	MT	Front	Van RWD CB41		Propshaft	PS900198
	1993.02-1998.05	MT	Front	Van RWD CB41		Propshaft	PS900199
1.0 (35 kw)	1994.07-	MT	Front	Platform/Chassis RWD CB42		Propshaft	PS900195
	1994.07-	MT	Front	Platform/Chassis RWD CB42		Propshaft	PS900196
	1994.07-	MT	Front	Platform/Chassis RWD CB42		Propshaft	PS900197
	1994.07-	MT	Front	Platform/Chassis RWD CB42		Propshaft	PS900198
	1994.07-	MT	Front	Platform/Chassis RWD CB42		Propshaft	PS900199
PONTIAC							
Montana							
3.4 (138 kw)	1998.04-2005.08		-	MPV 4WD LA1		Joint,propshaft	606026
3.5 (149 kw)	2004.09-2006.12	AT	Rear	MPV 4WD LX9	Model year from:2005	Propshaft	PS901521
3.9 (179 kw)	2004.04-2009.12	AT	Rear	MPV 4WD LZ9	For Model year:2006	Propshaft	PS901521
Solstice							
2.0 (194 kw)	2006.09-2009.12	AT	Rear	Convertible RWD LNF		Propshaft	PS901389
	2006.09-2009.12	5AT/5MT	Rear	Convertible RWD LNF		Joint,propshaft	635045
	2008.09-2009.12	AT	Rear	Coupe RWD LNF		Propshaft	PS901389
2.4 (132 kw)	2005.03-2009.12	AT	Rear	Cabriolet RWD LE5		Propshaft	PS901389
Torrent							
3.4 (138 kw)	2004.08-2009.06	5AT	Rear	MPV 4WD LNJ	For Model year:2006	Propshaft	PS900190
	2004.08-2009.06	AT	Rear	MPV 4WD LNJ	Model year from:2008	Propshaft	PS900191
	2004.08-2009.06	5AT	-	MPV 4WD LNJ		Joint,propshaft	635046
	2004.08-2009.12		-	MPV FWD LNJ		Joint,propshaft	635046
3.6 (197 kw)	2007.09-2009.12	AT	Rear	MPV 4WD LY7	Model year from:2008	Propshaft	PS901441
PORSCHE							
911							
2.7 (110 kw)	1973.09-1975.08	MT	Rear	Targa RWD 91197	Wheel Side,Transmission End,Rear Axle Left and Right	Joint,propshaft	618001
2.7 (121 kw)	1975.09-1977.06	MT	Rear	Coupe RWD 91141/91142/91181/91186	Wheel Side,Transmission End,Rear Axle Left and Right	Joint,propshaft	618001
3.0 (150 kw)	1980.08-1983.07	MT	Rear	Coupe RWD 93010	Wheel Side,Transmission End,Rear Axle Left and Right	Joint,propshaft	618001
3.4 (221 kw)	1997.08-2001.07		Front	Coupe RWD M9601/M9602		Flexible Coupling	538511
	1997.08-2001.07		Front	Coupe RWD M9601/M9602		Flexible Coupling Kit	538504S
	1997.09-2001.12		Front	Coupe 4WD M9601/M9602/M9604		Flexible Coupling	538511
	1997.09-2001.12		Front	Coupe 4WD M9601/M9602/M9604		Flexible Coupling Kit	538504S
	1998.02-2001.09		Front	Cabriolet RWD M9601/M9602		Flexible Coupling	538511
	1998.02-2001.09		Front	Cabriolet RWD M9601/M9602		Flexible Coupling Kit	538504S
	1998.02-2001.11		Front	Cabriolet 4WD M9601/M9602		Flexible Coupling	538511
	1998.02-2001.11		Front	Cabriolet 4WD M9601/M9602		Flexible Coupling Kit	538504S
3.4 (235 kw)	2001.05-2005.08		Front	Cabriolet 4WD M9602		Flexible Coupling	538511
	2001.05-2005.08		Front	Cabriolet RWD M9602		Flexible Coupling	538511
	2001.05-2005.08		Front	Coupe 4WD M9602		Flexible Coupling	538511
	2001.05-2005.08		Front	Coupe RWD M9602		Flexible Coupling	538511
	2001.05-2005.08		Front	Cabriolet 4WD M9602		Flexible Coupling Kit	538504S
	2001.05-2005.08		Front	Cabriolet RWD M9602		Flexible Coupling Kit	538504S
	2001.05-2005.08		Front	Coupe 4WD M9602		Flexible Coupling Kit	538504S
	2001.05-2005.08		Front	Coupe RWD M9602		Flexible Coupling Kit	538504S
3.6 (235 kw)	2001.08-2005.01		Front	Cabriolet 4WD M9603		Flexible Coupling	538511
	2001.08-2005.01		Front	Cabriolet 4WD M9603		Flexible Coupling Kit	538504S
	2001.10-2005.08		Front	Cabriolet RWD M9603		Flexible Coupling	538511
	2001.10-2005.08		Front	Coupe 4WD M9603		Flexible Coupling	538511
	2001.10-2005.08		Front	Coupe RWD M9603		Flexible Coupling	538511
	2001.10-2005.08		Front	Cabriolet RWD M9603		Flexible Coupling Kit	538504S

	YEAR	TRANSM.	FITTING POSITION	BODY STYLE & DRIVE TYPE & ENGINE	REMARKS	PRODUCT	GSP Ref.
PORSCHE							
911							
3.6 (235 kw)	2001.10-2005.08		Front	Coupe 4WD M9603		Flexible Coupling Kit	538504S
	2001.10-2005.08		Front	Coupe RWD M9603		Flexible Coupling Kit	538504S
3.6 (239 kw)	2004.07-2008.12	MT	Front	Coupe 4WD M9605		Propshaft	PS901811
	2004.07-2008.12		Front	Coupe 4WD M9605		Flexible Coupling	538511
	2004.07-2008.12		Front	Coupe 4WD M9605		Flexible Coupling Kit	538504S
	2004.08-2008.12		Front	Coupe RWD M9605		Flexible Coupling	538511
	2004.08-2008.12		Front	Coupe RWD M9605		Flexible Coupling Kit	538504S
	2005.02-2008.12		Front	Cabriolet RWD M9605		Flexible Coupling	538511
	2005.02-2008.12		Front	Cabriolet RWD M9605		Flexible Coupling Kit	538504S
	2005.08-2008.12	MT	Front	Cabriolet 4WD M9605		Propshaft	PS901811
	2005.08-2008.12		Front	Cabriolet 4WD M9605		Flexible Coupling	538511
	2005.08-2008.12		Front	Cabriolet 4WD M9605		Flexible Coupling Kit	538504S
	2006.01-2008.12	MT	Front	Targa 4WD M9605		Propshaft	PS901811
	2006.01-2008.12		Front	Targa 4WD M9605		Flexible Coupling	538511
	2006.01-2008.12		Front	Targa 4WD M9605		Flexible Coupling Kit	538504S
3.6 (254 kw)	2002.06-2004.07		Front	Coupe 4WD M9603		Flexible Coupling	538511
	2002.06-2004.07		Front	Coupe RWD M9603		Flexible Coupling	538511
	2002.06-2004.07		Front	Coupe 4WD M9603		Flexible Coupling Kit	538504S
	2002.06-2004.07		Front	Coupe RWD M9603		Flexible Coupling Kit	538504S
	2002.06-2005.01		Front	Cabriolet 4WD M9603		Flexible Coupling	538511
	2002.06-2005.01		Front	Cabriolet RWD M9603		Flexible Coupling	538511
	2002.06-2005.01		Front	Cabriolet 4WD M9603		Flexible Coupling Kit	538504S
	2002.06-2005.01		Front	Cabriolet RWD M9603		Flexible Coupling Kit	538504S
	2008.06-2012.09	MT	Front	Coupe 4WD MA102		Propshaft	PS901811
	2008.09-2012.09	MT	Front	Cabriolet 4WD MA102		Propshaft	PS901811
3.8 (261 kw)	2004.07-2010.12	MT	Front	Coupe 4WD M9701		Propshaft	PS901811
	2004.07-2010.12		Front	Coupe 4WD M9701		Flexible Coupling	538511
	2004.07-2010.12		Front	Coupe 4WD M9701		Flexible Coupling Kit	538504S
	2004.08-2008.12		Front	Coupe RWD M9701		Flexible Coupling	538511
	2004.08-2008.12		Front	Coupe RWD M9701		Flexible Coupling Kit	538504S
	2005.04-2008.12		Front	Cabriolet RWD M9701		Flexible Coupling	538511
	2005.04-2008.12		Front	Cabriolet RWD M9701		Flexible Coupling Kit	538504S
	2005.04-2010.12	MT	Front	Cabriolet 4WD M9701		Propshaft	PS901811
	2005.04-2010.12		Front	Cabriolet 4WD M9701		Flexible Coupling	538511
	2005.04-2010.12		Front	Cabriolet 4WD M9701		Flexible Coupling Kit	538504S
	2006.07-2008.12	MT	Front	Targa 4WD M9701		Propshaft	PS901811
	2006.07-2008.12		Front	Targa 4WD M9701		Flexible Coupling	538511
	2006.07-2008.12		Front	Targa 4WD M9701		Flexible Coupling Kit	538504S
3.8 (264 kw)	2005.04-2010.12	MT	Front	Cabriolet 4WD M9701		Propshaft	PS901811
	2005.04-2010.12		Front	Cabriolet 4WD M9701		Flexible Coupling	538511
	2005.04-2010.12		Front	Cabriolet 4WD M9701		Flexible Coupling Kit	538504S
	2005.09-2008.12	MT	Front	Coupe 4WD M9701		Propshaft	PS901811
	2005.09-2008.12		Front	Coupe 4WD M9701		Flexible Coupling	538511
	2005.09-2008.12		Front	Coupe 4WD M9701		Flexible Coupling Kit	538504S
3.8 (280 kw)	2005.08-2008.12	MT	Front	Cabriolet 4WD M9701S		Propshaft	PS901811
	2005.08-2008.12	MT	Front	Coupe 4WD M9701S		Propshaft	PS901811
	2005.08-2008.12		Front	Cabriolet 4WD M9701S		Flexible Coupling	538511
	2005.08-2008.12		Front	Cabriolet RWD M9701S		Flexible Coupling	538511
	2005.08-2008.12		Front	Coupe 4WD M9701S		Flexible Coupling	538511
	2005.08-2008.12		Front	Coupe RWD M9701S		Flexible Coupling	538511
	2005.08-2008.12		Front	Cabriolet 4WD M9701S		Flexible Coupling Kit	538504S
	2005.08-2008.12		Front	Cabriolet RWD M9701S		Flexible Coupling Kit	538504S
	2005.08-2008.12		Front	Coupe 4WD M9701S		Flexible Coupling Kit	538504S
	2005.08-2008.12		Front	Coupe RWD M9701S		Flexible Coupling Kit	538504S
	2006.11-2008.12	MT	Front	Targa 4WD M9701S		Propshaft	PS901811
3.8 (283 kw)	2008.06-2012.09	MT	Front	Cabriolet 4WD MA101		Propshaft	PS901811
	2008.06-2012.09	MT	Front	Coupe 4WD MA101		Propshaft	PS901811
	2008.10-2012.12	MT	Front	Targa 4WD MA101		Propshaft	PS901811
3.8 (300 kw)	2009.08-2012.05	MT	Front	Targa 4WD MA101		Propshaft	PS901811
	2010.10-2012.09	MT	Front	Cabriolet 4WD MA101	Date from:2012.01,Date to:2012.12	Propshaft	PS901811
	2010.10-2012.09	MT	Front	Coupe 4WD MA101	Date from:2012.01,Date to:2012.12	Propshaft	PS901811
911 GT2							
3.6 (340 kw)	2001.04-2005.08		Front	Coupe RWD M9670S		Flexible Coupling	538511
	2001.04-2005.08		Front	Coupe RWD M9670S		Flexible Coupling Kit	538504S

	YEAR	TRANSM.	FITTING POSITION	BODY STYLE & DRIVE TYPE & ENGINE	REMARKS	PRODUCT	GSP Ref.
PORSCHE							
911 GT2							
3.6 (355 kw)	2003.10-2005.08		Front	Coupe RWD M9670S		Flexible Coupling	538511
	2003.10-2005.08		Front	Coupe RWD M9670S		Flexible Coupling Kit	538504S
3.6 (390 kw)	2007.08-2009.12		Front	Coupe RWD M9770S		Flexible Coupling	538511
	2007.08-2009.12		Front	Coupe RWD M9770S		Flexible Coupling Kit	538504S
3.6 (456 kw)	2010.01-2012.09		Front	Coupe RWD M9770		Flexible Coupling	538511
	2010.01-2012.09		Front	Coupe RWD M9770		Flexible Coupling Kit	538504S
3.6 (462 kw)	2010.01-2012.09		Front	Coupe RWD M97.70		Flexible Coupling Kit	538504S
911 Turbo							
3.6 (309 kw)	2000.06-2005.08		Front	Coupe 4WD M9670		Flexible Coupling	538511
	2000.06-2005.08		Front	Coupe 4WD M9670		Flexible Coupling Kit	538504S
	2003.05-2005.12		Front	Cabriolet 4WD M9670		Flexible Coupling	538511
	2003.05-2005.12		Front	Cabriolet 4WD M9670		Flexible Coupling Kit	538504S
3.6 (331 kw)	2003.02-2005.08		Front	Coupe 4WD M9670		Flexible Coupling	538511
	2003.02-2005.08		Front	Coupe 4WD M9670		Flexible Coupling Kit	538504S
	2003.05-2005.08		Front	Cabriolet 4WD M9670		Flexible Coupling	538511
	2003.05-2005.08		Front	Cabriolet 4WD M9670		Flexible Coupling Kit	538504S
	2004.08-2005.08		Front	Cabriolet RWD M9670		Flexible Coupling	538511
	2004.08-2005.08		Front	Coupe RWD M9670		Flexible Coupling	538511
	2004.08-2005.08		Front	Cabriolet RWD M9670		Flexible Coupling Kit	538504S
	2004.08-2005.08		Front	Coupe RWD M9670		Flexible Coupling Kit	538504S
3.6 (353 kw)	2005.01-2012.03		Front	Cabriolet 4WD M9770		Flexible Coupling	538511
	2005.01-2012.03		Front	Cabriolet 4WD M9770		Flexible Coupling Kit	538504S
	2006.01-2010.02		Front	Coupe 4WD M9770		Flexible Coupling	538511
	2006.01-2010.02		Front	Coupe 4WD M9770		Flexible Coupling Kit	538504S
3.8 (390 kw)	2010.01-2012.09	MT	Front	Cabriolet 4WD MA170	Date from:2011.01	Propshaft	PS901811
	2010.01-2012.09	MT	Front	Coupe 4WD MA170	Date from:2011.01	Propshaft	PS901811
Cayenne							
3.0 (155 kw)	2010.10-	AT	Rear	SUV 4WD MCRCB/MCVVC	Date from:2012.01	Propshaft	PS901657
	2010.10-		Centre	SUV 4WD MCRCB/MCVVC		Center Bearing Support	538617
	2010.10-		Centre	SUV 4WD MCRCB/MCVVC	Engine Code:MCR.CB	Center Bearing Support Kit	538694S
	2010.10-		Rear	SUV 4WD MCRCB/MCVVC		Flexible Coupling Kit	517957S
3.0 (176 kw)	2009.02-2010.05		Front	SUV 4WD M059D	Date to:2010.05	Joint,propshaft	661094
	2009.02-2010.05		Centre	SUV 4WD M059D		Center Bearing Support	538617
	2009.02-2010.05		Centre	SUV 4WD M059D		Center Bearing Support Kit	538694S
	2009.02-2010.05		Rear	SUV 4WD M059D		Flexible Coupling Kit	517957S
	2010.06-2011.09	AT	Rear	SUV 4WD M059E	Date from:2012.01	Propshaft	PS901657
	2010.06-2011.09		Centre	SUV 4WD M059E		Center Bearing Support	538617
	2010.06-2011.09		Centre	SUV 4WD M059E	Engine Code:M 05.9E	Center Bearing Support Kit	538694S
	2010.06-2011.09		Rear	SUV 4WD M059E		Flexible Coupling Kit	517957S
3.0 (180 kw)	2010.06-	AT	Rear	SUV 4WD MCRCA	Date from:2012.01	Propshaft	PS901657
	2010.06-		Centre	SUV 4WD MCRCA		Center Bearing Support	538617
	2010.06-		Centre	SUV 4WD MCRCA		Center Bearing Support Kit	538694S
	2010.06-		Rear	SUV 4WD MCRCA		Flexible Coupling Kit	517957S
3.0 (184 kw)	2014.08-	AT	Rear	SUV 4WD MCVVB	Date from:2015.01	Propshaft	PS901657
	2014.08-		Centre	SUV 4WD MCVVB		Center Bearing Support Kit	539946S
3.0 (193 kw)	2014.10-	AT	Rear	SUV 4WD MCVVA	Date from:2015.01	Propshaft	PS901657
	2014.10-		Centre	SUV 4WD MCVVA		Center Bearing Support Kit	539946S
3.0 (245 kw)	2011.04-	AT	Front	SUV 4WD M 06.EC, MCJ.T	Model year from:2014,Model year to:2016	Propshaft	PS900522
	2011.04-		Centre	SUV 4WD M 06.EC, MCJ.T		Center Bearing Support Kit	538694S
	2011.04-		Rear	SUV 4WD M 06.EC, MCJ.T		Flexible Coupling Kit	517957S
3.0 (279 kw)	2010.05-2014.12	8AT	Rear	SUV 4WD CGEA, CGFA	Model year from:2011	Propshaft	PS900523
3.0 (306 kw)	2011.05-2018.05	AT	Front	SUV 4WD MCGEA/MCGFA	Model year from:2014,Model year to:2016	Propshaft	PS900522
	2011.05-2018.05	8AT	Rear	SUV 4WD MCGEA/MCGFA	Model year from:2014,Model year to:2018	Propshaft	PS900523
	2011.05-2018.05		Centre	SUV 4WD MCGEA/MCGFA		Center Bearing Support	538617
	2011.05-2018.05		Centre	SUV 4WD MCGEA/MCGFA		Center Bearing Support Kit	538694S
	2011.05-2018.05		Rear	SUV 4WD MCGEA/MCGFA		Flexible Coupling Kit	517957S
3.2 (177 kw)	2003.08-2006.12	AT	Front	SUV 4WD M022Y	Model year from:2004,Model year to:2006	Propshaft	PS900525
	2003.08-2006.12	AT	Rear	SUV 4WD M022Y	Model year from:2004,Model year to:2006	Propshaft	PS900527
	2003.08-2006.12		Rear	SUV 4WD M022Y		Joint,propshaft	601297
	2003.08-2006.12		Centre	SUV 4WD M022Y		Center Bearing Support	538617
	2003.08-2006.12		Centre	SUV 4WD M022Y		Center Bearing Support Kit	538694S
	2003.08-2006.12		Rear	SUV 4WD M022Y		Flexible Coupling	517957
	2003.08-2006.12		Rear	SUV 4WD M022Y		Flexible Coupling Kit	517957S

	YEAR	TRANSM.	FITTING POSITION	BODY STYLE & DRIVE TYPE & ENGINE	REMARKS	PRODUCT	GSP Ref.
PORSCHE **Cayenne**							
3.2 (184 kw)	2003.10-2006.12	AT	Front	SUV 4WD M022Y	Model year from:2004,Model year to:2006	Propshaft	PS900525
	2003.10-2006.12	AT	Rear	SUV 4WD M022Y	Model year from:2004,Model year to:2006	Propshaft	PS900527
	2003.10-2006.12		Centre	SUV 4WD M022Y		Center Bearing Support	538617
	2003.10-2006.12		Centre	SUV 4WD M022Y		Center Bearing Support Kit	538694S
	2003.10-2006.12		Rear	SUV 4WD M022Y		Flexible Coupling	517957
	2003.10-2006.12		Rear	SUV 4WD M022Y		Flexible Coupling Kit	517957S
3.6 (213 kw)	2007.02-2010.05	AT	Front	SUV 4WD M5501	Model year from:2008	Propshaft	PS900525
	2007.02-2010.05	AT	Rear	SUV 4WD M5501	Model year from:2008	Propshaft	PS900527
	2007.02-2010.05		Rear	SUV 4WD M5501		Joint,propshaft	601297
	2007.02-2010.05		Centre	SUV 4WD M5501		Center Bearing Support	538617
	2007.02-2010.05		Centre	SUV 4WD M5501		Center Bearing Support Kit	538694S
	2007.02-2010.05		Rear	SUV 4WD M5501		Flexible Coupling	517957
	2007.02-2010.05		Rear	SUV 4WD M5501		Flexible Coupling Kit	517957S
3.6 (220 kw)	2010.06-	8AT	Rear	SUV 4WD M5502/MCEYA	Model year from:2011,Model year to:2013	Propshaft	PS900523
	2010.06-		Centre	SUV 4WD M5502/MCEYA		Center Bearing Support	538617
	2010.06-		Centre	SUV 4WD M5502/MCEYA	Engine Code:M 55.02	Center Bearing Support Kit	538694S
	2010.06-		Rear	SUV 4WD M5502/MCEYA		Flexible Coupling Kit	517957S
3.6 (309 kw)	2014.10-		Centre	SUV 4WD MCURA		Center Bearing Support Kit	539946S
3.6 (324 kw)	2015.02-	AT	Rear	SUV 4WD MCXZA		Propshaft	PS900625
	2015.02-		Centre	SUV 4WD MCXZA		Center Bearing Support Kit	539946S
4.2 (281 kw)	2012.10-2014.09		Centre	SUV 4WD MCUDB		Center Bearing Support	538617
	2012.10-2014.09		Centre	SUV 4WD MCUDB		Center Bearing Support Kit	538694S
	2012.10-2014.09		Rear	SUV 4WD MCUDB		Flexible Coupling Kit	517957S
4.2 (283 kw)	2014.10-		Centre	SUV 4WD MCUDC		Center Bearing Support Kit	539946S
4.5 (184 kw)	2002.09-2006.12	AT	Front	SUV 4WD 9PA	Model year from:2003	Propshaft	PS900525
	2002.09-2006.12		Rear	SUV 4WD 9PA	Model year from:2003,Model year to:2006	Propshaft	PS900527
	2002.09-2006.12		Rear	SUV 4WD 9PA		Joint,propshaft	601297
4.5 (250 kw)	2002.08-2006.12	AT	Front	SUV 4WD M4800	Model year from:2003,Model year to:2006	Propshaft	PS900525
	2002.08-2006.12	AT	Rear	SUV 4WD M4800	Model year from:2003,Model year to:2006	Propshaft	PS900527
	2002.08-2006.12		Front	SUV 4WD M4800	Date to:2006.12	Joint,propshaft	661094
	2002.08-2006.12		Centre	SUV 4WD M4800		Center Bearing Support	538617
	2002.08-2006.12		Centre	SUV 4WD M4800		Center Bearing Support Kit	538694S
	2002.08-2006.12		Rear	SUV 4WD M4800		Flexible Coupling	517957
	2002.08-2006.12		Rear	SUV 4WD M4800		Flexible Coupling Kit	517957S
4.5 (331 kw)	2002.08-2006.12	AT	Front	SUV 4WD M4850	Model year from:2003,Model year to:2006	Propshaft	PS900525
	2002.08-2006.12		Front	SUV 4WD M4850	Date to:2006.12	Joint,propshaft	661094
	2002.08-2006.12		Rear	SUV 4WD M4850		Joint,propshaft	601297
	2002.08-2006.12		Centre	SUV 4WD M4850		Center Bearing Support	538617
	2002.08-2006.12		Centre	SUV 4WD M4850		Center Bearing Support Kit	538694S
	2002.08-2006.12		Rear	SUV 4WD M4850		Flexible Coupling	517957
	2002.08-2006.12		Rear	SUV 4WD M4850		Flexible Coupling Kit	517957S
4.5 (368 kw)	2004.01-2005.10		Centre	SUV 4WD M4850S		Center Bearing Support	538617
	2004.01-2005.10		Centre	SUV 4WD M4850S		Center Bearing Support Kit	538694S
	2004.01-2005.10		Rear	SUV 4WD M4850S		Flexible Coupling	517957
	2004.01-2005.10		Rear	SUV 4WD M4850S		Flexible Coupling Kit	517957S
4.5 (383 kw)	2006.03-2010.05		Rear	SUV 4WD M4850T		Joint,propshaft	601297
	2006.03-2010.05		Centre	SUV 4WD M4850T		Center Bearing Support	538617
	2006.03-2010.05		Centre	SUV 4WD M4850T		Center Bearing Support Kit	538694S
	2006.03-2010.05		Rear	SUV 4WD M4850T		Flexible Coupling	517957
	2006.03-2010.05		Rear	SUV 4WD M4850T		Flexible Coupling Kit	517957S
4.8 (283 kw)	2007.02-2010.12	AT	Front	SUV 4WD M4801	Model year from:2008	Propshaft	PS900525
	2007.02-2010.12	AT	Rear	SUV 4WD M4801	Model year from:2008	Propshaft	PS900527
	2007.02-2010.12		Rear	SUV 4WD M4801		Joint,propshaft	601297
	2007.02-2010.12		Centre	SUV 4WD M4801		Center Bearing Support	538617
	2007.02-2010.12		Centre	SUV 4WD M4801		Center Bearing Support Kit	538694S
	2007.02-2010.12		Rear	SUV 4WD M4801		Flexible Coupling	517957
	2007.02-2010.12		Rear	SUV 4WD M4801		Flexible Coupling Kit	517957S
4.8 (294 kw)	2010.06-2014.09	AT	Front	SUV 4WD M4802	Model year from:2014,Model year to:2016	Propshaft	PS900522
	2010.06-2014.09	AT	Rear	SUV 4WD M4802		Propshaft	PS900625
	2010.06-2014.09		Centre	SUV 4WD M4802		Center Bearing Support	538617
	2010.06-2014.09		Centre	SUV 4WD M4802		Center Bearing Support Kit	538694S
	2010.06-2014.09		Rear	SUV 4WD M4802		Flexible Coupling Kit	517957S
4.8 (298 kw)	2007.10-2010.12	AT	Front	SUV 4WD M4801	Model year from:2008	Propshaft	PS900525
	2007.10-2010.12	AT	Rear	SUV 4WD M4801	Model year from:2008	Propshaft	PS900527

	YEAR	TRANSM.	FITTING POSITION	BODY STYLE & DRIVE TYPE & ENGINE	REMARKS	PRODUCT	GSP Ref.
PORSCHE							
Cayenne							
4.8 (298 kw)	2007.10-2010.12		Rear	SUV 4WD M4801		Joint,propshaft	601297
	2007.10-2010.12		Centre	SUV 4WD M4801		Center Bearing Support	538617
	2007.10-2010.12		Centre	SUV 4WD M4801		Center Bearing Support Kit	538694S
	2007.10-2010.12		Rear	SUV 4WD M4801		Flexible Coupling	517957
	2007.10-2010.12		Rear	SUV 4WD M4801		Flexible Coupling Kit	517957S
4.8 (309 kw)	2012.06-2014.09	AT	Front	SUV 4WD M4802	Model year from:2014,Model year to:2016	Propshaft	PS900522
	2012.06-2014.09		Centre	SUV 4WD M4802		Center Bearing Support	538617
	2012.06-2014.09		Centre	SUV 4WD M4802		Center Bearing Support Kit	538694S
	2012.06-2014.09		Rear	SUV 4WD M4802		Flexible Coupling Kit	517957S
4.8 (368 kw)	2006.12-2010.05	AT	Front	SUV 4WD M4851	Model year from:2009	Propshaft	PS900525
	2006.12-2010.05	6AT	Rear	SUV 4WD M4851	Model year from:2009	Propshaft	PS900527
	2006.12-2010.05		Front	SUV 4WD M4851	Date to:2010.05	Joint,propshaft	661094
	2006.12-2010.05		Centre	SUV 4WD M4851		Center Bearing Support	538617
	2006.12-2010.05		Centre	SUV 4WD M4851		Center Bearing Support Kit	538694S
	2006.12-2010.05		Rear	SUV 4WD M4851		Flexible Coupling	517957
	2006.12-2010.05		Rear	SUV 4WD M4851		Flexible Coupling Kit	517957S
	2010.06-2014.09	AT	Front	SUV 4WD M4852	Model year from:2014,Model year to:2016	Propshaft	PS900522
	2010.06-2014.09	8AT	Rear	SUV 4WD M4852	Model year from:2011,Model year to:2013;for OE No.:95842101123	Propshaft	PS900523
	2010.06-2014.09	AT	Rear	SUV 4WD M4852	Date to:2010.12;for OE No.:95842101132	Propshaft	PS900625
	2010.06-2014.09		Centre	SUV 4WD M4852		Center Bearing Support	538617
	2010.06-2014.09		Centre	SUV 4WD M4852		Center Bearing Support Kit	538694S
	2010.06-2014.09		Rear	SUV 4WD M4852		Flexible Coupling Kit	517957S
4.8 (373 kw)	2007.09-2009.12	AT	Front	SUV 4WD M 48.51	Model year from:2008	Propshaft	PS900525
	2007.09-2009.12	AT	Rear	SUV 4WD M 48.51	Model year from:2008	Propshaft	PS900527
	2007.09-2009.12		Rear	SUV 4WD M 48.51		Joint,propshaft	601297
4.8 (382 kw)	2014.10-	AT	Front	SUV 4WD MCFTB	Model year to:2016	Propshaft	PS900522
	2014.10-	AT	Rear	SUV 4WD MCFTB	Date from:2015.01	Propshaft	PS900625
	2014.10-		Centre	SUV 4WD MCFTB		Center Bearing Support Kit	539946S
4.8 (397 kw)	2008.08-2010.05	AT	Front	SUV 4WD M4851	Model year from:2009	Propshaft	PS900525
	2008.08-2010.05	6AT	Rear	SUV 4WD M4851	Model year from:2009	Propshaft	PS900527
	2008.08-2010.05		Centre	SUV 4WD M4851		Center Bearing Support	538617
	2008.08-2010.05		Centre	SUV 4WD M4851		Center Bearing Support Kit	538694S
	2008.08-2010.05		Rear	SUV 4WD M4851		Flexible Coupling	517957
	2008.08-2010.05		Rear	SUV 4WD M4851		Flexible Coupling Kit	517957S
	2010.06-2014.09	AT	Front	SUV 4WD M4852	Model year from:2014,Model year to:2016	Propshaft	PS900522
	2010.06-2014.09	8AT	Rear	SUV 4WD M4852	Model year from:2011,Model year to:2013	Propshaft	PS900523
	2010.06-2014.09		Centre	SUV 4WD M4852		Center Bearing Support	538617
	2010.06-2014.09		Centre	SUV 4WD M4852		Center Bearing Support Kit	538694S
	2010.06-2014.09		Rear	SUV 4WD M4852		Flexible Coupling Kit	517957S
4.8 (404 kw)	2008.08-2010.05	AT	Front	SUV 4WD M4851	Model year from:2009	Propshaft	PS900525
	2008.08-2010.05	6AT	Rear	SUV 4WD M4851	Model year from:2009	Propshaft	PS900527
	2008.08-2010.05		Rear	SUV 4WD M4851		Joint,propshaft	601297
	2008.08-2010.05		Centre	SUV 4WD M4851		Center Bearing Support	538617
	2008.08-2010.05		Centre	SUV 4WD M4851		Center Bearing Support Kit	538694S
	2008.08-2010.05		Rear	SUV 4WD M4851		Flexible Coupling	517957
	2008.08-2010.05		Rear	SUV 4WD M4851		Flexible Coupling Kit	517957S
4.8 (405 kw)	2012.10-2014.09	AT	Front	SUV 4WD M4852	Model year to:2016	Propshaft	PS900522
	2012.10-2014.09		Centre	SUV 4WD M4852		Center Bearing Support	538617
	2012.10-2014.09		Centre	SUV 4WD M4852		Center Bearing Support Kit	538694S
	2012.10-2014.09		Rear	SUV 4WD M4852		Flexible Coupling Kit	517957S
4.8 (419 kw)	2015.01-	AT	Front	SUV 4WD MCYXA	Model year to:2016	Propshaft	PS900522
	2015.01-	AT	Rear	SUV 4WD MCYXA		Propshaft	PS900625
	2015.01-		Centre	SUV 4WD MCYXA		Center Bearing Support Kit	539946S
Macan							
2.0 (174 kw)	2014.05-2018.09	7DCT	Rear	SUV 4WD CNCC/MCYNA	Date from:2016.06	Propshaft	PS901954
	2014.05-2018.09	AT	Rear	SUV 4WD CNCC/MCYNA	Date to:2016.06	Propshaft	PS901745
2.0 (180 kw)	2018.05-	7DCT	Rear	SUV 4WD DKNA		Propshaft	PS901954
2.0 (185 kw)	2015.01-	7DCT	Rear	SUV 4WD DLHB/MCYPA	Date from:2016.06	Propshaft	PS901954
	2015.01-	AT	Rear	SUV 4WD DLHB/MCYPA	Date to:2016.06	Propshaft	PS901745
3.0 (155 kw)	2014.02-2018.09	AT	Rear	SUV 4WD MCTBB	Date to:2016.06	Propshaft	PS900591
	2014.02-2018.09		Centre	SUV 4WD MCTBB		Center Bearing Support	539929
3.0 (180 kw)	2014.02-2018.09	AT	Rear	SUV 4WD MCDUD	Date to:2016.06	Propshaft	PS900591
	2014.02-2018.09		Centre	SUV 4WD MCDUD		Center Bearing Support	539929

	YEAR	TRANSM.	FITTING POSITION	BODY STYLE & DRIVE TYPE & ENGINE	REMARKS	PRODUCT	GSP Ref.
PORSCHE							
Macan							
3.0 (184 kw)	2014.02-2018.09	AT	Rear	SUV 4WD MCTBC	Date to:2016.06	Propshaft	PS900591
	2014.02-2018.09		Centre	SUV 4WD MCTBC		Center Bearing Support	539929
3.0 (190 kw)	2014.02-2018.09	AT	Rear	SUV 4WD MCTBA		Propshaft	PS900591
	2014.02-2018.09		Centre	SUV 4WD MCTBA		Center Bearing Support	539929
3.0 (250 kw)	2014.02-2018.09	AT	Rear	SUV 4WD MCTMA	Date to:2016.06	Propshaft	PS900591
	2014.02-2018.09		Centre	SUV 4WD MCTMA		Center Bearing Support	539929
3.0 (265 kw)	2015.11-2018.09	AT	Rear	SUV 4WD MDCNA	Date to:2016.06	Propshaft	PS900591
	2015.11-2018.09		Centre	SUV 4WD MDCNA		Center Bearing Support	539929
3.6 (294 kw)	2014.02-2018.09	AT	Rear	SUV 4WD MCTLA	Date to:2016.06	Propshaft	PS900591
	2014.02-2018.09		Centre	SUV 4WD MCTLA		Center Bearing Support	539929
Panamera							
3.0 (155 kw)	2011.08-2016.10	AT	Rear	Hatchback RWD MCRCB		Propshaft	PS900566
	2011.08-2016.10		Rear	Hatchback RWD MCRCB		Flexible Coupling	517957
3.0 (184 kw)	2011.08-2016.10	AT	Rear	Hatchback RWD MCRC/MCRCC		Propshaft	PS900566
	2011.08-2016.10		Rear	Hatchback RWD MCRC/MCRCC		Flexible Coupling	517957
3.0 (221 kw)	2014.01-2016.10		Rear	Hatchback RWD MCWJA		Flexible Coupling	517957
3.0 (235 kw)	2013.10-2016.10	7DCT	Rear	Hatchback 4WD MCW.F, MCW.FA	With Executive car	Propshaft	PS901840
3.0 (279 kw)	2011.03-2013.07		Rear	Hatchback RWD MCGEA/MCGFA		Flexible Coupling	517957
3.0 (309 kw)	2013.08-2016.10	7DCT	Rear	Hatchback 4WD MCWDA	Without Executive car	Propshaft	PS900560
	2013.08-2016.10	7DCT	Rear	Hatchback 4WD MCWDA	With Executive car	Propshaft	PS901840
	2013.08-2016.10	AT	Rear	Hatchback RWD MCWDA	for PR code:339	Propshaft	PS900560
	2013.08-2016.10	AT	Rear	Hatchback RWD MCWDA	For PR code:338	Propshaft	PS900566
	2013.08-2016.10		Rear	Hatchback 4WD MCWDA		Flexible Coupling	517957
	2013.08-2016.10		Rear	Hatchback RWD MCWDA		Flexible Coupling	517957
3.6 (220 kw)	2010.04-2013.07		Rear	Hatchback 4WD M4640		Propshaft	PS900560
	2010.04-2013.07		Rear	Hatchback 4WD M4640		Flexible Coupling	517957
	2010.05-2013.07	AT	Rear	Hatchback RWD M4620	For PR code:250	Propshaft	PS900566
	2010.05-2013.07		Rear	Hatchback RWD M4620		Flexible Coupling	517957
3.6 (228 kw)	2013.08-2016.10	AT	Rear	Hatchback 4WD MCWAA/MCXNA	for PR code:339	Propshaft	PS900560
	2013.08-2016.10	AT	Rear	Hatchback RWD MCWAA/MCXNA	for PR code:339	Propshaft	PS900560
	2013.08-2016.10	AT	Rear	Hatchback 4WD MCWAA/MCXNA	For PR code:338	Propshaft	PS900566
	2013.08-2016.10	AT	Rear	Hatchback RWD MCWAA/MCXNA	For PR code:338	Propshaft	PS900566
	2013.08-2016.10		Rear	Hatchback 4WD MCWAA/MCXNA		Flexible Coupling	517957
	2013.08-2016.10		Rear	Hatchback RWD MCWAA/MCXNA		Flexible Coupling	517957
4.8 (294 kw)	2009.09-2013.07		Rear	Hatchback 4WD M4840		Propshaft	PS900560
	2009.09-2013.07	AT	Rear	Hatchback RWD M4820	For PR code:250	Propshaft	PS900566
	2009.09-2013.07		Rear	Hatchback 4WD M4840		Flexible Coupling	517957
	2009.09-2013.07		Rear	Hatchback RWD M4820		Flexible Coupling	517957
4.8 (316 kw)	2012.01-2016.10	7DCT	Rear	Hatchback 4WD M4840/MCXRA	Without Executive car	Propshaft	PS900560
	2012.01-2016.10	7DCT	Rear	Hatchback 4WD M4840/MCXRA	With Executive car	Propshaft	PS901840
	2012.01-2016.10		Rear	Hatchback 4WD M4840/MCXRA		Flexible Coupling	517957
4.8 (324 kw)	2013.08-2016.10	7DCT	Rear	Hatchback 4WD MCXPA/MCXRA	Without Executive car	Propshaft	PS900560
	2013.08-2016.10	7DCT	Rear	Hatchback 4WD MCXPA/MCXRA	With Executive car	Propshaft	PS901840
	2013.08-2016.10		Rear	Hatchback 4WD MCXPA/MCXRA		Flexible Coupling	517957
4.8 (368 kw)	2009.09-2013.12	AT	Rear	Hatchback 4WD M4870	Model year from:2010	Propshaft	PS900450
	2009.09-2013.12		Rear	Hatchback 4WD M4870		Flexible Coupling	517957
4.8 (382 kw)	2013.04-2016.10	AT	Rear	Hatchback 4WD MCWBA		Propshaft	PS900450
	2013.04-2016.10		Rear	Hatchback 4WD MCWBA		Flexible Coupling	517957
4.8 (397 kw)	2010.08-2013.07	AT	Rear	Hatchback 4WD M4870		Propshaft	PS900450
	2010.08-2013.07		Rear	Hatchback 4WD M4870		Flexible Coupling	517957
4.8 (404 kw)	2011.05-2013.12	AT	Rear	Hatchback 4WD M4870	Model year from:2012	Propshaft	PS900450
	2011.05-2013.12		Rear	Hatchback 4WD M4870		Flexible Coupling	517957
4.8 (419 kw)	2014.01-2016.10	AT	Rear	Hatchback 4WD MCWCA		Propshaft	PS900450
	2014.01-2016.10		Rear	Hatchback 4WD MCWCA		Flexible Coupling	517957
RAM							
1500							
3.7 (160 kw)	2009.09-2014.12	AT	Front	Pickup 4WD EKG	For Model year:2012	Propshaft	PS900210
	2010.09-2013.12	AT	Front	Pickup 4WD EKG	For Model year:2012	Propshaft	PS900210
	2010.09-2015.12	AT	Front	Pickup 4WD EKG	For Model year:2012	Propshaft	PS900210
5.7 (295 kw)	2012.09-	AT	Front	Pickup 4WD EZH	Model year from:2013;for OE No.:52123639AA	Propshaft	PS900209
	2012.09-	AT	Front	Pickup 4WD EZH	Model year to:2020;for OE No.:52123021AE	Propshaft	PS900210
	2012.09-	AT	Rear	Pickup 4WD EZH	Model year to:2018;for OE No.:68034653AB	Propshaft	PS901450

	YEAR	TRANSM.	FITTING POSITION	BODY STYLE & DRIVE TYPE & ENGINE	REMARKS	PRODUCT	GSP Ref.
RAM							
1500 Crew Cab Pickup							
3.6 (227 kw)	2012.09-	AT	Front	Pickup 4WD ERB	Model year from:2013;for OE No.:52123639AA	Propshaft	PS900209
	2012.09-	AT	Front	Pickup 4WD ERB	Model year to:2020;for OE No.:52123021AE	Propshaft	PS900210
	2012.09-	AT	Rear	Pickup 4WD ERB	Model year from:2013,Model year to:2018;for OE No.:68034653AB	Propshaft	PS901450
4.7 (231 kw)	2010.09-	AT	Front	Pickup 4WD EVE	For Model year:2013;for OE No.:52123639AA	Propshaft	PS900209
	2010.09-	AT	Front	Pickup 4WD EVE	Model year from:2012,Model year to:2013;for OE No.:52123021AE	Propshaft	PS900210
	2010.09-	AT	Rear	Pickup 4WD EVE	Model year from:2011,Model year to:2013;for OE No.:68034653AB	Propshaft	PS901450
5.7 (295 kw)	2012.09-2018.12	AT	Front	Pickup 4WD EZH	Model year from:2013;for OE No.:52123639AA	Propshaft	PS900209
	2012.09-2018.12	AT	Front	Pickup 4WD EZH	Model year to:2020;for OE No.:52123021AE	Propshaft	PS900210
	2012.09-2018.12	6AT	Rear	Pickup RWD EZH	Model year to:2020	Propshaft	PS901397
	2012.09-2018.12	AT	Rear	Pickup 4WD EZH	Model year to:2018;for OE No.:68034653AB	Propshaft	PS901450
1500 Extended Cab							
3.6 (227 kw)	2012.09-	AT	Front	Pickup 4WD ERB	Model year from:2013;for OE No.:52123639AA	Propshaft	PS900209
	2012.09-	AT	Front	Pickup 4WD ERB	Model year to:2020;for OE No.:52123021AE	Propshaft	PS900210
	2012.09-	AT	Rear	Pickup 4WD ERB	Model year from:2013,Model year to:2018;for OE No.:68034653AB	Propshaft	PS901450
4.7 (231 kw)	2010.09-	AT	Front	Pickup 4WD EVE	For Model year:2013;for OE No.:52123639AA	Propshaft	PS900209
	2010.09-	AT	Front	Pickup 4WD EVE	Model year from:2012,Model year to:2013;for OE No.:52123021AE	Propshaft	PS900210
	2010.09-	AT	Rear	Pickup 4WD EVE	Model year from:2011,Model year to:2013;for OE No.:68034653AB	Propshaft	PS901450
1500 Standard Cab Pickup							
3.0 (179 kw)	2013.09-2018.12	AT	Rear	Pickup 4WD EXF	Model year from:2014,Model year to:2018;for OE No.:68034653AB	Propshaft	PS901450
3.6 (227 kw)	2012.09-	AT	Front	Pickup 4WD ERB	Model year from:2013;for OE No.:52123639AA	Propshaft	PS900209
	2012.09-	AT	Front	Pickup 4WD ERB	Model year to:2020;for OE No.:52123021AE	Propshaft	PS900210
	2012.09-	AT	Rear	Pickup 4WD ERB	Model year from:2013,Model year to:2018;for OE No.:68034653AB	Propshaft	PS901450
4.7 (231 kw)	2010.09-	AT	Front	Pickup 4WD EVE	For Model year:2013;for OE No.:52123639AA	Propshaft	PS900209
	2010.09-	AT	Front	Pickup 4WD EVE	Model year from:2012,Model year to:2013;for OE No.:52123021AE	Propshaft	PS900210
	2010.09-	AT	Rear	Pickup 4WD EVE	Model year from:2011,Model year to:2013;for OE No.:68034653AB	Propshaft	PS901450
5.7 (291 kw)	2010.09-	AT	Front	Pickup 4WD EZH	Model year from:2013;for OE No.:52123639AA	Propshaft	PS900209
	2010.09-	AT	Front	Pickup 4WD EZH	Model year to:2020;for OE No.:52123021AE	Propshaft	PS900210
	2010.09-	AT	Rear	Pickup 4WD EZH	Model year to:2018;for OE No.:68034653AB	Propshaft	PS901450
	2010.09-2012.12	6AT	Rear	Pickup RWD EZH	Model year to:2020	Propshaft	PS901397
2500							
5.7 (286 kw)	2012.01-2018.12	6MT	Front	Pickup 4WD EZFCNG	Model year from:2013,Model year to:2018;for OE No.:05146801AB	Propshaft	PS901446
	2012.01-2018.12	AT	Front	Pickup 4WD EZFCNG	for OE No.:5146803AA	Propshaft	PS900216
	2012.09-	6MT	Front	Pickup 4WD EZF	Model year from:2013,Model year to:2018	Propshaft	PS901446
	2012.09-2018.12	6MT	Front	Pickup 4WD EZF	Model year from:2013,Model year to:2018;for OE No.:05146801AB	Propshaft	PS901446
	2012.09-2018.12	AT	Front	Pickup 4WD EZF	for OE No.:5146803AA	Propshaft	PS900216
6.4 (306 kw)	2013.09-	6MT	Front	Pickup 4WD ESA	Model year from:2014,Model year to:2018;for OE No.:05146801AB	Propshaft	PS901446
	2013.09-	AT	Front	Pickup 4WD ESA	Model year from:2013,Model year to:2018;for OE No.:5146803AA	Propshaft	PS900216
6.7 (261 kw)	2010.09-2018.12	6MT	Front	Pickup 4WD ETJ/ETK	Model year from:2013,Model year to:2018;for OE No.:05146801AB	Propshaft	PS901446
	2010.09-2018.12	AT	Front	Pickup 4WD ETJ/ETK	Model year to:2013;for OE No.:52123326AD	Propshaft	PS900204
	2010.09-2018.12	AT	Front	Pickup 4WD ETJ/ETK	Model year from:2013,Model year to:2018;for OE No.:5146803AA	Propshaft	PS900216
	2010.09-2018.12	AT	Front	Pickup 4WD ETJ/ETK	Model year from:2011,Model year to:2013;for OE No.:52123325AA	Propshaft	PS901447
2500 Crew Cab Pickup							
5.7 (286 kw)	2010.09-2018.12	6MT	Front	Pickup 4WD EZC	Model year from:2013,Model year to:2018;for OE No.:05146801AB	Propshaft	PS901446
	2010.09-2018.12	AT	Front	Pickup 4WD EZC	Model year to:2013;for OE No.:52123326AD	Propshaft	PS900204
	2010.09-2018.12	AT	Front	Pickup 4WD EZC	Model year from:2011,Model year to:2013;for OE No.:52123325AA	Propshaft	PS901447
6.7 (261 kw)	2010.09-	6MT	Front	Pickup 4WD ETJ	Model year from:2013,Model year to:2018;for OE No.:05146801AB	Propshaft	PS901446
	2010.09-	AT	Front	Pickup 4WD ETJ	Model year to:2013;for OE No.:52123326AD	Propshaft	PS900204
	2010.09-	AT	Front	Pickup 4WD ETJ	Model year from:2013,Model year to:2018;for OE No.:5146803AA	Propshaft	PS900216
	2010.09-	AT	Front	Pickup 4WD ETJ	Model year from:2011,Model year to:2013;for OE No.:52123325AA	Propshaft	PS901447
3500							
6.7 (257 kw)	2011.01-	6AT	Front	Pickup 4WD ETJ	Model year to:2013;for OE No.:52123325AA	Propshaft	PS901447
	2011.01-	6MT	Front	Pickup 4WD ETJ	Model year from:2013,Model year to:2018;for OE No.:05146801AB	Propshaft	PS901446
	2011.01-	AT	Front	Pickup 4WD ETJ	Model year to:2013;for OE No.:52123326AD	Propshaft	PS900204
	2011.01-	AT	Front	Pickup 4WD ETJ	Model year from:2013,Model year to:2018;for OE No.:5146803AA	Propshaft	PS900216
6.7 (261 kw)	2010.09-	6AT	Front	Pickup 4WD ETJ/ETK	Model year from:2011,Model year to:2013;for OE No.:52123325AA	Propshaft	PS901447
	2010.09-	6MT	Front	Pickup 4WD ETJ/ETK	Model year from:2013,Model year to:2018;for OE No.:05146801AB	Propshaft	PS901446
	2010.09-	AT	Front	Pickup 4WD ETJ/ETK	Model year to:2013;for OE No.:52123326AD	Propshaft	PS900204
	2010.09-	AT	Front	Pickup 4WD ETJ/ETK	Model year from:2013,Model year to:2018;for OE No.:5146803AA	Propshaft	PS900216
6.7 (276 kw)	2012.09-	6AT	Front	Pickup 4WD ETJ/ETK/ETL	Model year to:2013;for OE No.:52123325AA	Propshaft	PS901447
	2012.09-	6MT	Front	Pickup 4WD ETJ/ETK/ETL	Model year from:2013,Model year to:2018;for OE No.:05146801AB	Propshaft	PS901446
	2012.09-	AT	Front	Pickup 4WD ETJ/ETK/ETL	Model year to:2013;for OE No.:52123326AD	Propshaft	PS900204
	2012.09-	AT	Front	Pickup 4WD ETJ/ETK/ETL	Model year from:2013,Model year to:2018;for OE No.:5146803AA	Propshaft	PS900216

	YEAR	TRANSM.	FITTING POSITION	BODY STYLE & DRIVE TYPE & ENGINE	REMARKS	PRODUCT	GSP Ref.
RAM							
3500 Extended Crew Cab Pickup							
6.7 (261 kw)	2010.09-	6AT	Front	Pickup 4WD ETJ, ETK	Model year from:2011,Model year to:2013;for OE No.:52123325AA	Propshaft	PS901447
	2010.09-	6MT	Front	Pickup 4WD ETJ, ETK	Model year from:2013,Model year to:2018;for OE No.:05146801AB	Propshaft	PS901446
	2010.09-	AT	Front	Pickup 4WD ETJ, ETK	Model year to:2013;for OE No.:52123326AD	Propshaft	PS900204
	2010.09-	AT	Front	Pickup 4WD ETJ, ETK	Model year from:2013,Model year to:2018;for OE No.:5146803AA	Propshaft	PS900216
3500 Standard Cab Pickup							
6.7 (276 kw)	2012.09-	6AT	Front	Pickup 4WD ETJ, ETK, ETL	Model year to:2013;for OE No.:52123325AA	Propshaft	PS901447
	2012.09-	6MT	Front	Pickup 4WD ETJ, ETK, ETL	Model year from:2013,Model year to:2018;for OE No.:05146801AB	Propshaft	PS901446
	2012.09-	AT	Front	Pickup 4WD ETJ, ETK, ETL	Model year to:2013;for OE No.:52123326AD	Propshaft	PS900204
	2012.09-	AT	Front	Pickup 4WD ETJ, ETK, ETL	Model year from:2013,Model year to:2018;for OE No.:5146803AA	Propshaft	PS900216
RENAULT							
Duster							
1.5 (66 kw)	2011.06-2018.01	MT	Rear	SUV 4WD K9K884	Date to:2018.01	Propshaft	PS900557
1.5 (80 kw)	2013.09-	MT	Rear	SUV 4WD K9K898		Propshaft	PS900557
	2019.07-	MT	Rear	SUV 4WD K9K658/K9K858		Propshaft	PS900557
1.6 (75 kw)	2011.06-2015.05	MT	Rear	SUV 4WD K4M490/K4M606/K4M646/K4M690		Propshaft	PS900557
1.6 (84 kw)	2015.06-	MT	Rear	SUV 4WD H4M430		Propshaft	PS900557
2.0 (99 kw)	2012.02-2018.01		Rear	SUV 4WD F4R400/F4R401/F4R402	Date to:2018.01	Propshaft	PS900557
Kangoo							
1.6 (70 kw)	2001.11-2008.06	MT	Rear	MPV 4WD K4M750	Trans. code:OH1/JC7/JB3,Date to:2008.06	Propshaft	PS900451
	2001.11-2008.06		Front	MPV 4WD K4M750		Flexible Coupling Kit	537791S
1.9 (59 kw)	2001.11-2003.06	MT	Rear	MPV 4WD F9Q790	Trans. code:OH1/JC7/JC5,Date to:2003.06	Propshaft	PS900451
	2001.11-2003.06		Front	MPV 4WD F9Q790		Flexible Coupling Kit	537791S
1.9 (62 kw)	2003.10-2007.09	MT	Rear	MPV 4WD F9Q790	Trans. code:OH1/JC7,Date to:2007.09	Propshaft	PS900451
	2003.10-2007.09		Front	MPV 4WD F9Q790		Flexible Coupling Kit	537791S
Kangoo Express							
1.6 (70 kw)	2001.11-2008.06	MT	Rear	MPV Van 4WD K4M750	Trans. code:OH1/JC7,Date to:2008.06	Propshaft	PS900451
	2001.11-2008.06		Front	MPV Van 4WD K4M750		Flexible Coupling Kit	537791S
1.9 (59 kw)	2001.10-2003.06	MT	Rear	MPV Van 4WD F9Q790	Trans. code:OH1/JC7/JC5,Date to:2003.06	Propshaft	PS900451
	2001.10-2003.06		Front	MPV Van 4WD F9Q790		Flexible Coupling Kit	537791S
1.9 (62 kw)	2003.07-2008.06	MT	Rear	MPV Van 4WD F9Q790	Trans. code:OH1/JC7,Date to:2008.06	Propshaft	PS900451
	2003.07-2008.06		Front	MPV Van 4WD F9Q790		Flexible Coupling Kit	537791S
Kangoo Rapid							
1.6 (70 kw)	2001.11-2008.06	MT	Rear	MPV Van 4WD K4M750/K4M752/K4M753/K4M754	Trans. code:OH1/JC7/JB3/DP0,Date to:2008.06	Propshaft	PS900451
	2001.11-2008.06		Front	MPV Van 4WD K4M750/K4M752/K4M753/K4M754		Flexible Coupling Kit	537791S
1.9 (59 kw)	2001.10-2008.06	MT	Rear	MPV Van 4WD F9Q782/F9Q790	Trans. code:OH1/JC7/JC5,Date to:2008.06	Propshaft	PS900451
	2001.10-2008.06		Front	MPV Van 4WD F9Q782/F9Q790		Flexible Coupling Kit	537791S
1.9 (62 kw)	2003.07-2008.06	MT	Rear	MPV Van 4WD F9Q782/F9Q790	Trans. code:OH1/JC7,Date to:2008.06	Propshaft	PS900451
	2003.07-2008.06		Front	MPV Van 4WD F9Q782/F9Q790		Flexible Coupling Kit	537791S
Koleos							
2.0 (110 kw)	2008.09-		Rear	SUV 4WD M4R822/M4R823/M4R824/M4R825/M4R826/M4R827/M4R828/M4R829/M4R830/M4R831/M4R832/M4R833/M4R834		Propshaft	PS901346
2.5 (126 kw)	2008.09-		Centre	SUV 4WD 2TR700/2TR702/2TR703/2TR705		Center Bearing Support Kit	538683S
Master							
2.3 (107 kw)	2014.07-2019.06		Centre	Platform/Chassis 4WD M9T 710		Center Bearing Support	539910S
	2016.05-2021.09	6MT	Rear	Van 4WD M9T710		Propshaft	PS901687
	2016.05-2021.09		Centre	Van 4WD M9T710		Center Bearing Support	539910S
2.3 (120 kw)	2014.07-2019.06		Centre	Platform/Chassis 4WD M9T 710		Center Bearing Support	539910S
	2016.05-2021.09		Centre	Van 4WD M9T 710		Center Bearing Support	539910S
Master T28							
2.3 (74 kw)	2010.02-		Centre	Van FWD M9T670/M9T672/M9T676/M9T870		Center Bearing Support	539910S
	2010.02-		Centre	Van RWD M9T690/M9T890		Center Bearing Support	539910S
	2010.02-		Front	Van RWD M9T690/M9T890		Flexible Coupling	533884
	2011.02-		Centre	Bus FWD M9T670/M9T672/M9T676/M9T870		Center Bearing Support	539910S
2.3 (81 kw)	2014.07-		Centre	Van FWD M9T704/M9T726/M9T870		Center Bearing Support	539910S
2.3 (92 kw)	2010.02-		Centre	Van FWD M9T670/M9T672/M9T676/M9T680/M9T870/M9T872/M9T876/M9T880		Center Bearing Support	539910S
	2011.02-		Centre	Bus FWD M9T670/M9T676/M9T680/M9T870		Center Bearing Support	539910S
2.3 (96 kw)	2015.07-		Centre	Van FWD M9T704		Center Bearing Support	539910S
	2015.07-		Front;Rear	Van FWD M9T704		Flexible Coupling	533884
2.3 (100 kw)	2014.07-		Centre	Van FWD M9T702/M9T716/M9T726		Center Bearing Support	539910S
2.3 (107 kw)	2010.02-		Centre	Van FWD M9T672/M9T678/M9T680/M9T706/M9T708		Center Bearing Support	539910S
2.3 (110 kw)	2013.03-		Centre	Van FWD M9T716/M9T726/M9T880		Center Bearing Support	539910S
2.3 (120 kw)	2014.07-		Centre	Van FWD M9T702		Center Bearing Support	539910S
	2014.07-		Front;Rear	Van FWD M9T702		Flexible Coupling	533884
2.3 (125 kw)	2015.07-		Centre	Van FWD M9T706		Center Bearing Support	539910S

	YEAR	TRANSM.	FITTING POSITION	BODY STYLE & DRIVE TYPE & ENGINE	REMARKS	PRODUCT	GSP Ref.
RENAULT							
Master T28							
2.3 (132 kw)	2019.07-		Centre	Van FWD M9T716		Center Bearing Support	539910S
Master T30							
2.3 (74 kw)	2011.02-		Centre	Bus FWD M9T670/M9T672/M9T676/M9T870		Center Bearing Support	539910S
2.3 (81 kw)	2014.09-		Centre	Bus FWD M9T704/M9T870		Center Bearing Support	539910S
2.3 (92 kw)	2012.10-		Centre	Bus FWD M9T670/M9T672/M9T676/M9T680/M9T870/M9T880		Center Bearing Support	539910S
2.3 (110 kw)	2013.03-		Centre	Bus FWD M9T880		Center Bearing Support	539910S
2.3 (125 kw)	2015.07-		Centre	Bus FWD M9T706		Center Bearing Support	539910S
2.3 (132 kw)	2020.01-		Centre	Bus FWD M9T716		Center Bearing Support	539910S
Master T31							
ET (57 kw)	2018.03-		Centre	Van FWD 5AQ604		Center Bearing Support	539910S
	2018.03-		Centre	Chassis Cabin FWD 5AQ604		Center Bearing Support	539910S
Master T33							
2.3 (74 kw)	2010.02-		Centre	Van FWD M9T670/M9T672/M9T676/M9T870		Center Bearing Support	539910S
	2010.02-		Centre	Van RWD M9T690/M9T890		Center Bearing Support	539910S
	2010.02-		Front	Van RWD M9T690/M9T890		Flexible Coupling	533884
	2011.02-		Centre	Bus FWD M9T670/M9T672/M9T676/M9T870		Center Bearing Support	539910S
2.3 (81 kw)	2014.09-		Centre	Van FWD M9T704/M9T870		Center Bearing Support	539910S
	2015.07-		Centre	Bus FWD M9T704		Center Bearing Support	539910S
2.3 (92 kw)	2010.02-		Centre	Van FWD M9T670/M9T672/M9T676/M9T680/M9T870/M9T872/M9T880		Center Bearing Support	539910S
	2011.02-		Centre	Bus FWD M9T670/M9T672/M9T676/M9T680/M9T870/M9T880		Center Bearing Support	539910S
2.3 (96 kw)	2015.07-		Centre	Van FWD M9T704		Center Bearing Support	539910S
	2015.07-		Front;Rear	Van FWD M9T704		Flexible Coupling	533884
2.3 (100 kw)	2014.07-		Centre	Van FWD M9T702/M9T716/M9T726		Center Bearing Support	539910S
	2014.07-		Centre	Bus FWD M9T702		Center Bearing Support	539910S
2.3 (107 kw)	2010.02-		Centre	Van FWD M9T672/M9T678/M9T680/M9T706/M9T708		Center Bearing Support	539910S
2.3 (110 kw)	2013.03-		Centre	Bus FWD M9T880		Center Bearing Support	539910S
	2013.03-		Centre	Van FWD M9T716/M9T726/M9T880		Center Bearing Support	539910S
2.3 (120 kw)	2014.07-		Centre	Van FWD M9T702		Center Bearing Support	539910S
	2014.07-		Centre	Bus FWD M9T702		Center Bearing Support	539910S
	2014.07-		Front;Rear	Van FWD M9T702		Flexible Coupling	533884
2.3 (125 kw)	2015.07-		Centre	Bus FWD M9T706		Center Bearing Support	539910S
	2015.07-		Centre	Van FWD M9T706		Center Bearing Support	539910S
2.3 (132 kw)	2019.07-		Centre	Van FWD M9T716		Center Bearing Support	539910S
	2020.01-		Centre	Bus FWD M9T716		Center Bearing Support	539910S
Master T35							
2.3 (74 kw)	2010.02-		Centre	Chassis Cabin FWD M9T670/M9T672/M9T676/M9T870		Center Bearing Support	539910S
	2010.02-		Centre	Van FWD M9T670/M9T672/M9T870		Center Bearing Support	539910S
	2010.02-		Centre	Chassis Cabin RWD M9T690/M9T892		Center Bearing Support	539910S
	2010.02-		Centre	Van RWD M9T690/M9T890		Center Bearing Support	539910S
	2010.02-		Front	Chassis Cabin RWD M9T690/M9T892		Flexible Coupling	533884
	2010.02-		Front	Van RWD M9T690/M9T890		Flexible Coupling	533884
	2011.02-		Centre	Bus FWD M9T670/M9T672/M9T676/M9T870		Center Bearing Support	539910S
2.3 (81 kw)	2014.07-		Centre	Chassis Cabin FWD M9T704/M9T870		Center Bearing Support	539910S
	2014.07-		Centre	Van FWD M9T704/M9T726/M9T870		Center Bearing Support	539910S
	2015.07-		Centre	Bus FWD M9T704		Center Bearing Support	539910S
2.3 (92 kw)	2010.02-	6MT	Rear	Van RWD M9T685/M9T690/M9T692/M9T695/M9T698/M9T890/M9T892/M9T895/M9T898	Model year to:2014	Propshaft	PS901687
	2010.02-		Centre	Chassis Cabin FWD M9T670/M9T672/M9T676/M9T680/M9T870/M9T872/M9T876/M9T880/M9T882		Center Bearing Support	539910S
	2010.02-		Centre	Chassis Cabin RWD M9T685/M9T690/M9T692/M9T695/M9T698/M9T890/M9T892/M9T895/M9T898		Center Bearing Support	539910S
	2010.02-		Centre	Van FWD M9T670/M9T672/M9T676/M9T680/M9T870/M9T872/M9T876/M9T880/M9T882		Center Bearing Support	539910S
	2010.02-		Centre	Van RWD M9T685/M9T690/M9T692/M9T695/M9T698/M9T890/M9T892/M9T895/M9T898		Center Bearing Support	539910S
	2010.02-		Front	Chassis Cabin FWD M9T670/M9T672/M9T676/M9T680/M9T870/M9T872/M9T876/M9T880/M9T882	Engine Code:M9T 672	Flexible Coupling	533884
	2010.02-		Front	Chassis Cabin RWD M9T685/M9T690/M9T692/M9T695/M9T698/M9T890/M9T892/M9T895/M9T898		Flexible Coupling	533884
	2010.02-		Front	Van RWD M9T685/M9T690/M9T692/M9T695/M9T698/M9T890/M9T892/M9T895/M9T898		Flexible Coupling	533884
	2011.02-		Centre	Bus FWD M9T670/M9T672/M9T676/M9T680/M9T870/M9T880		Center Bearing Support	539910S
2.3 (96 kw)	2013.04-		Centre	Chassis Cabin FWD M9T702/M9T704		Center Bearing Support	539910S
	2013.04-		Centre	Van FWD M9T702/M9T704		Center Bearing Support	539910S
	2013.04-		Front;Rear	Chassis Cabin FWD M9T702/M9T704		Flexible Coupling	533884
	2013.04-		Front;Rear	Van FWD M9T702/M9T704		Flexible Coupling	533884
	2015.07-		Centre	Chassis Cabin RWD M9T710		Center Bearing Support	539910S
	2015.07-		Centre	Van RWD M9T710		Center Bearing Support	539910S
	2015.07-		Front	Chassis Cabin RWD M9T710		Flexible Coupling	533884
	2015.07-		Front	Van RWD M9T710		Flexible Coupling	533884
2.3 (100 kw)	2014.07-		Centre	Chassis Cabin FWD M9T702/M9T716		Center Bearing Support	539910S
	2014.07-		Centre	Chassis Cabin RWD M9T700		Center Bearing Support	539910S

	YEAR	TRANSM.	FITTING POSITION	BODY STYLE & DRIVE TYPE & ENGINE	REMARKS	PRODUCT	GSP Ref.
RENAULT							
Master T35							
2.3 (100 kw)	2014.07-		Centre	Van FWD M9T702/M9T716/M9T726		Center Bearing Support	539910S
	2014.07-		Centre	Van RWD M9T700		Center Bearing Support	539910S
	2014.07-		Front	Chassis Cabin RWD M9T700		Flexible Coupling	533884
	2014.07-		Front	Van RWD M9T700		Flexible Coupling	533884
	2014.07-		Front;Rear	Chassis Cabin FWD M9T702/M9T716		Flexible Coupling	533884
	2020.03-		Centre	Bus FWD M9T716		Center Bearing Support	539910S
2.3 (107 kw)	2010.02-	6MT	Rear	Van RWD M9T694/M9T696/M9T698/M9T710	Model year to:2014	Propshaft	PS901687
	2010.02-		Centre	Van RWD M9T694/M9T696/M9T698/M9T710		Center Bearing Support	539910S
	2010.02-		Centre	Chassis Cabin FWD M9T678/M9T680/M9T706/M9T708		Center Bearing Support	539910S
	2010.02-		Centre	Chassis Cabin RWD M9T694/M9T696/M9T698/M9T710		Center Bearing Support	539910S
	2010.02-		Centre	Van FWD M9T672/M9T678/M9T680/M9T706/M9T708		Center Bearing Support	539910S
	2010.02-		Front	Van RWD M9T694/M9T696/M9T698/M9T710		Flexible Coupling	533884
	2010.02-		Front	Chassis Cabin RWD M9T694/M9T696/M9T698/M9T710		Flexible Coupling	533884
	2010.02-		Front;Rear	Chassis Cabin FWD M9T678/M9T680/M9T706/M9T708		Flexible Coupling	533884
2.3 (110 kw)	2013.03-		Centre	Bus FWD M9T716/M9T880		Center Bearing Support	539910S
	2013.03-		Centre	Van FWD M9T716/M9T726/M9T880		Center Bearing Support	539910S
	2013.03-		Centre	Van RWD M9T896/M9T898		Center Bearing Support	539910S
	2013.03-		Centre	Chassis Cabin FWD M9T716/M9T880		Center Bearing Support	539910S
	2013.03-		Centre	Chassis Cabin RWD M9T896/M9T898		Center Bearing Support	539910S
	2013.03-		Front	Van RWD M9T896/M9T898		Flexible Coupling	533884
	2013.03-		Front	Chassis Cabin RWD M9T896/M9T898		Flexible Coupling	533884
2.3 (120 kw)	2014.07-		Centre	Chassis Cabin FWD M9T702/M9T708		Center Bearing Support	539910S
	2014.07-		Centre	Chassis Cabin RWD M9T700/M9T710		Center Bearing Support	539910S
	2014.07-		Centre	Van FWD M9T702/M9T708		Center Bearing Support	539910S
	2014.07-		Centre	Van RWD M9T700/M9T710		Center Bearing Support	539910S
	2014.07-		Front	Chassis Cabin RWD M9T700/M9T710		Flexible Coupling	533884
	2014.07-		Front	Van RWD M9T700/M9T710		Flexible Coupling	533884
	2014.07-		Front;Rear	Van FWD M9T702/M9T708		Flexible Coupling	533884
2.3 (125 kw)	2015.07-		Centre	Bus FWD M9T706		Center Bearing Support	539910S
	2015.07-		Centre	Chassis Cabin FWD M9T706		Center Bearing Support	539910S
	2015.07-		Centre	Van FWD M9T706		Center Bearing Support	539910S
2.3 (132 kw)	2019.07-		Centre	Chassis Cabin FWD M9T716		Center Bearing Support	539910S
	2019.07-		Centre	Van FWD M9T716/M9T726		Center Bearing Support	539910S
	2020.01-		Centre	Bus FWD M9T716		Center Bearing Support	539910S
ET (57 kw)	2020.11-		Centre	Chassis Cabin FWD 5AQ604		Center Bearing Support	539910S
	2020.11-		Centre	Van FWD 5AQ604		Center Bearing Support	539910S
Master T38							
2.3 (92 kw)	2012.08-		Centre	Bus FWD M9T670/M9T672/M9T676/M9T680/M9T870/M9T880		Center Bearing Support	539910S
2.3 (120 kw)	2015.07-		Centre	Bus FWD M9T708		Center Bearing Support	539910S
Master T39							
2.3 (120 kw)	2015.07-		Centre	Bus FWD M9T708		Center Bearing Support	539910S
Master T45							
2.3 (74 kw)	2010.02-		Centre	Chassis Cabin RWD M9T690/M9T892		Center Bearing Support	539910S
	2010.02-		Centre	Van RWD M9T690/M9T890/M9T892		Center Bearing Support	539910S
	2010.02-		Front	Chassis Cabin RWD M9T690/M9T892		Flexible Coupling	533884
	2010.02-		Front	Van RWD M9T690/M9T890/M9T892		Flexible Coupling	533884
2.3 (92 kw)	2010.02-	6MT	Rear	Van RWD M9T686/M9T690/M9T692/M9T696/M9T698/M9T890/M9T892/M9T896/M9T898	Model year to:2014	Propshaft	PS901687
	2010.02-		Centre	Chassis Cabin RWD M9T690/M9T696/M9T698/M9T890/M9T892/M9T896/M9T898		Center Bearing Support	539910S
	2010.02-		Centre	Van RWD M9T686/M9T690/M9T692/M9T696/M9T698/M9T890/M9T892/M9T896/M9T898		Center Bearing Support	539910S
	2010.02-		Centre	Chassis Cabin FWD M9T676/M9T872		Center Bearing Support	539910S
	2010.02-		Front	Chassis Cabin RWD M9T690/M9T696/M9T698/M9T890/M9T892/M9T896/M9T898		Flexible Coupling	533884
	2010.02-		Front	Van RWD M9T686/M9T690/M9T692/M9T696/M9T698/M9T890/M9T892/M9T896/M9T898		Flexible Coupling	533884
	2010.02-		Front	Chassis Cabin FWD M9T676/M9T872	Engine Code:M9T 672	Flexible Coupling	533884
2.3 (96 kw)	2015.07-		Centre	Van RWD M9T710		Center Bearing Support	539910S
	2015.07-		Centre	Chassis Cabin RWD M9T710		Center Bearing Support	539910S
	2015.07-		Front	Van RWD M9T710		Flexible Coupling	533884
	2015.07-		Front	Chassis Cabin RWD M9T710		Flexible Coupling	533884
2.3 (100 kw)	2014.07-		Centre	Chassis Cabin RWD M9T700		Center Bearing Support	539910S
	2014.07-		Centre	Van RWD M9T700		Center Bearing Support	539910S
	2014.07-		Front	Chassis Cabin RWD M9T700		Flexible Coupling	533884
	2014.07-		Front	Van RWD M9T700		Flexible Coupling	533884
2.3 (107 kw)	2010.02-	6MT	Rear	Van RWD M9T694/M9T696/M9T698/M9T710	Model year to:2014	Propshaft	PS901687
	2010.02-		Centre	Chassis Cabin RWD M9T694/M9T696/M9T698/M9T710		Center Bearing Support	539910S
	2010.02-		Centre	Van RWD M9T694/M9T696/M9T698/M9T710		Center Bearing Support	539910S

	YEAR	TRANSM.	FITTING POSITION	BODY STYLE & DRIVE TYPE & ENGINE	REMARKS	PRODUCT	GSP Ref.
RENAULT							
Master T45							
2.3 (107 kw)	2010.02-		Front	Chassis Cabin RWD M9T694/M9T696/M9T698/M9T710		Flexible Coupling	533884
	2010.02-		Front	Van RWD M9T694/M9T696/M9T698/M9T710		Flexible Coupling	533884
2.3 (110 kw)	2013.03-		Centre	Chassis Cabin RWD M9T896/M9T898		Center Bearing Support	539910S
	2013.03-		Centre	Van FWD M9T880		Center Bearing Support	539910S
	2013.03-		Centre	Bus FWD M9T880		Center Bearing Support	539910S
	2013.03-		Front	Chassis Cabin RWD M9T896/M9T898		Flexible Coupling	533884
	2014.07-		Centre	Van RWD M9T896		Center Bearing Support	539910S
	2014.07-		Front	Van RWD M9T896		Flexible Coupling	533884
2.3 (120 kw)	2014.07-		Centre	Chassis Cabin RWD M9T700/M9T710		Center Bearing Support	539910S
	2014.07-		Centre	Van RWD M9T700/M9T710		Center Bearing Support	539910S
	2014.07-		Front	Chassis Cabin RWD M9T700/M9T710		Flexible Coupling	533884
	2014.07-		Front	Van RWD M9T700/M9T710		Flexible Coupling	533884
	2015.07-		Centre	Chassis Cabin FWD M9T708		Center Bearing Support	539910S
Megane Scenic							
2.0 (84 kw)	1997.05-1999.10		Front	MPV 4WD F3R750		Flexible Coupling Kit	537791S
Scenic RX4							
1.8 (85 kw)	2000.07-2001.04		Front	MPV 4WD F4P722		Flexible Coupling Kit	537791S
1.9 (74 kw)	2002.12-2003.08	MT	Rear	MPV 4WD F9Q732/F9Q748/F9Q796	Trans. code:M5	Propshaft	PS900453
	2002.12-2003.08	MT	-	MPV 4WD F9Q732/F9Q748/F9Q796		Joint,propshaft	605093
	2002.12-2003.08		Front	MPV 4WD F9Q732/F9Q748/F9Q796		Flexible Coupling Kit	537791S
1.9 (75 kw)	2000.11-2003.08	MT	Rear	MPV 4WD F9Q740	Trans. code:M5	Propshaft	PS900453
	2000.11-2003.08	MT	-	MPV 4WD F9Q740		Joint,propshaft	605093
	2000.11-2003.08		Front	MPV 4WD F9Q740		Flexible Coupling Kit	537791S
2.0 (102 kw)	2000.06-2003.08	MT	Rear	MPV 4WD F4R744	Trans. code:M5	Propshaft	PS900453
	2000.06-2003.08	MT	-	MPV 4WD F4R744		Joint,propshaft	605093
	2000.06-2003.08		Front	MPV 4WD F4R744		Flexible Coupling Kit	537791S
SAAB							
9-7X							
4.2 (213 kw)	2004.06-2012.07	AT	Front	SUV 4WD LL8(254CUL6)	Model year to:2009	Propshaft	PS900188
6.0 (295 kw)	2007.08-2012.07		Rear	SUV 4WD LS2	Model year from:2008,Model year to:2009	Propshaft	PS901391
SATURN							
Outlook							
3.6 (210 kw)	2008.09-2010.12	AT	Rear	SUV 4WD LLT		Propshaft	PS900173
Relay							
3.5 (149 kw)	2004.09-2006.12	AT	Rear	MPV 4WD LX9	Model year from:2005	Propshaft	PS901521
3.9 (175 kw)	2005.09-2006.12	AT	Rear	MPV 4WD LZ9	For Model year:2006	Propshaft	PS901521
Sky							
2.0 (194 kw)	2007.01-2010.12	AT	Rear	Cabriolet RWD LNF		Propshaft	PS901389
	2009.09-2010.12	AT	Rear	Convertible RWD LNF		Propshaft	PS901389
2.4 (132 kw)	2007.01-2010.12	AT	Rear	Cabriolet RWD LE5		Propshaft	PS901389
	2007.01-2010.12		Rear	Cabriolet RWD LE5		Joint,propshaft	635045
Vue							
2.2 (107 kw)	2001.09-2003.12	AT	Rear	SUV 4WD L61		Propshaft	PS900457
	2001.09-2003.12		Rear	SUV 4WD L61		Joint,propshaft	699239
3.0 (135 kw)	2001.09-2003.12	AT	Rear	SUV 4WD L81(181CUV6)		Propshaft	PS900457
	2001.09-2003.12		Rear	SUV 4WD L81(181CUV6)		Joint,propshaft	699239
3.5 (187 kw)	2003.09-2007.12	AT	Rear	SUV 4WD L66		Propshaft	PS900456
	2003.09-2007.12	CVT	Rear	SUV 4WD L66	Model year from:2004,Model year to:2005	Propshaft	PS900455
	2003.09-2007.12		Rear	SUV 4WD L66		Joint,propshaft	699239
3.6 (192 kw)	2007.09-2010.12	AT	Rear	SUV 4WD LLT	Model year from:2008	Propshaft	PS900454
SEAT							
Alhambra							
1.9 (85 kw)	2000.06-2010.03		Rear	MPV 4WD AUY/BVK		Flexible Coupling Kit	538520S
2.0 (103 kw)	2011.05-2015.04		Front	MPV 4WD CFFB		Flexible Coupling	537626
	2011.05-2015.04		Rear	MPV 4WD CFFB		Flexible Coupling	533882
	2011.05-2015.04		Front	MPV 4WD CFFB		Flexible Coupling Kit	537626S
	2011.05-2015.04		Rear	MPV 4WD CFFB		Flexible Coupling Kit	533882S
2.0 (110 kw)	2015.05-2022.12		Front	MPV 4WD CUVC/DFLA		Flexible Coupling	537626
	2015.05-2022.12		Front	MPV Van 4WD CUVC		Flexible Coupling	537626
	2015.05-2022.12		Rear	MPV 4WD CUVC/DFLA		Flexible Coupling	533882
	2015.05-2022.12		Rear	MPV Van 4WD CUVC		Flexible Coupling	533882
	2015.05-2022.12		Front	MPV 4WD CUVC/DFLA		Flexible Coupling Kit	537626S
	2015.05-2022.12		Front	MPV Van 4WD CUVC		Flexible Coupling Kit	537626S
	2015.05-2022.12		Rear	MPV 4WD CUVC/DFLA		Flexible Coupling Kit	533882S

	YEAR	TRANSM.	FITTING POSITION	BODY STYLE & DRIVE TYPE & ENGINE	REMARKS	PRODUCT	GSP Ref.
SEAT							
Alhambra							
2.0 (110 kw)	2015.05-2022.12		Rear	MPV Van 4WD CUVC		Flexible Coupling Kit	533882S
2.0 (130 kw)	2018.11-2022.12		Front	MPV 4WD DLUB		Flexible Coupling Kit	537626S
	2018.11-2022.12		Rear	MPV 4WD DLUB		Flexible Coupling Kit	533882S
2.0 (135 kw)	2015.05-2018.08		Front	MPV 4WD DFMA		Flexible Coupling	537626
	2015.05-2018.08		Rear	MPV 4WD DFMA		Flexible Coupling	533882
	2015.05-2018.08		Front	MPV 4WD DFMA		Flexible Coupling Kit	537626S
	2015.05-2018.08		Rear	MPV 4WD DFMA		Flexible Coupling Kit	533882S
2.8 (150 kw)	2000.08-2010.03		Rear	MPV 4WD AUE/AYL		Flexible Coupling Kit	538520S
Alhambra Van							
1.9 (85 kw)	2002.06-2008.05		Rear	MPV Van 4WD AUY/BVK		Flexible Coupling Kit	538520S
Altea Freetrack							
1.6 (77 kw)	2010.02-2013.06		Rear	MPV FWD CAYC		Flexible Coupling Kit	533882S
2.0 (103 kw)	2007.05-2010.11		Centre	MPV 4WD BMM		Center Bearing Support Kit	539917S
	2007.05-2010.11		Front	MPV 4WD BMM		Flexible Coupling	537626
	2007.05-2010.11		Rear	MPV 4WD BMM		Flexible Coupling	533882
	2007.05-2010.11		Front	MPV 4WD BMM		Flexible Coupling Kit	537626S
	2007.05-2010.11		Rear	MPV 4WD BMM		Flexible Coupling Kit	533882S
	2010.10-2015.07		Centre	MPV 4WD CFHC		Center Bearing Support Kit	539917S
	2010.10-2015.07		Rear	MPV 4WD CFHC		Flexible Coupling	533882
	2010.10-2015.07		Front	MPV 4WD CFHC		Flexible Coupling Kit	537626S
	2010.10-2015.07		Rear	MPV 4WD CFHC		Flexible Coupling Kit	533882S
2.0 (125 kw)	2007.06-2013.06		Centre	MPV 4WD BMN/CEGA/CFJA		Center Bearing Support Kit	539917S
	2007.06-2013.06		Front	MPV 4WD BMN/CEGA/CFJA		Flexible Coupling	537626
	2007.06-2013.06		Rear	MPV 4WD BMN/CEGA/CFJA		Flexible Coupling	533882
	2007.06-2013.06		Front	MPV 4WD BMN/CEGA/CFJA		Flexible Coupling Kit	537626S
	2007.06-2013.06		Rear	MPV 4WD BMN/CEGA/CFJA		Flexible Coupling Kit	533882S
2.0 (147 kw)	2007.06-2009.05		Centre	MPV 4WD BWA		Center Bearing Support Kit	539917S
	2007.06-2009.05		Front	MPV 4WD BWA		Flexible Coupling	537626
	2007.06-2009.05		Rear	MPV 4WD BWA		Flexible Coupling	533882
	2007.06-2009.05		Front	MPV 4WD BWA		Flexible Coupling Kit	537626S
	2007.06-2009.05		Rear	MPV 4WD BWA		Flexible Coupling Kit	533882S
2.0 (155 kw)	2009.05-2015.07		Centre	MPV 4WD CCZB		Center Bearing Support Kit	539917S
	2009.05-2015.07		Front	MPV 4WD CCZB		Flexible Coupling	537626
	2009.05-2015.07		Rear	MPV 4WD CCZB		Flexible Coupling	533882
	2009.05-2015.07		Front	MPV 4WD CCZB		Flexible Coupling Kit	537626S
	2009.05-2015.07		Rear	MPV 4WD CCZB		Flexible Coupling Kit	533882S
Altea XL							
1.6 (77 kw)	2009.11-2015.07		Rear	MPV FWD CAYC		Flexible Coupling Kit	533882S
1.9 (77 kw)	2009.05-2010.09		Centre	MPV 4WD BLS		Center Bearing Support Kit	539917S
	2009.05-2010.09		Rear	MPV 4WD BLS		Flexible Coupling	533882
	2009.05-2010.09		Front	MPV 4WD BLS		Flexible Coupling Kit	537626S
	2009.05-2010.09		Rear	MPV 4WD BLS		Flexible Coupling Kit	533882S
2.0 (103 kw)	2007.06-2010.11		Centre	MPV 4WD BMM		Center Bearing Support Kit	539917S
	2007.06-2010.11		Front	MPV 4WD BMM		Flexible Coupling	537626
	2007.06-2010.11		Rear	MPV 4WD BMM		Flexible Coupling	533882
	2007.06-2010.11		Front	MPV 4WD BMM		Flexible Coupling Kit	537626S
	2007.06-2010.11		Rear	MPV 4WD BMM		Flexible Coupling Kit	533882S
	2010.09-2015.07		Centre	MPV 4WD CFHC		Center Bearing Support Kit	539917S
	2010.09-2015.07		Rear	MPV 4WD CFHC		Flexible Coupling	533882
	2010.09-2015.07		Front	MPV 4WD CFHC		Flexible Coupling Kit	537626S
	2010.09-2015.07		Rear	MPV 4WD CFHC		Flexible Coupling Kit	533882S
2.0 (125 kw)	2007.06-2009.05		Centre	MPV 4WD BMN		Center Bearing Support Kit	539917S
	2007.06-2009.05		Front	MPV 4WD BMN		Flexible Coupling	537626
	2007.06-2009.05		Rear	MPV 4WD BMN		Flexible Coupling	533882
	2007.06-2009.05		Front	MPV 4WD BMN		Flexible Coupling Kit	537626S
	2007.06-2009.05		Rear	MPV 4WD BMN		Flexible Coupling Kit	533882S
2.0 (147 kw)	2007.06-2009.05		Centre	MPV 4WD BWA		Center Bearing Support Kit	539917S
	2007.06-2009.05		Front	MPV 4WD BWA		Flexible Coupling	537626
	2007.06-2009.05		Rear	MPV 4WD BWA		Flexible Coupling	533882
	2007.06-2009.05		Front	MPV 4WD BWA		Flexible Coupling Kit	537626S
	2007.06-2009.05		Rear	MPV 4WD BWA		Flexible Coupling Kit	533882S
Ateca							
1.4 (110 kw)	2016.06-		Front	SUV 4WD CZEA		Flexible Coupling	537626
	2016.06-		Rear	SUV 4WD CZEA		Flexible Coupling	533882

	YEAR	TRANSM.	FITTING POSITION	BODY STYLE & DRIVE TYPE & ENGINE	REMARKS	PRODUCT	GSP Ref.
SEAT							
Ateca							
1.4 (110 kw)	2016.06-		Front	SUV 4WD CZEA		Flexible Coupling Kit	537626S
	2016.06-		Rear	SUV 4WD CZEA		Flexible Coupling Kit	533882S
2.0 (110 kw)	2016.06-		Front	SUV 4WD DFFA/DTTC		Flexible Coupling	537626
	2016.06-		Rear	SUV 4WD DFFA/DTTC		Flexible Coupling	533882
	2016.06-		Front	SUV 4WD DFFA/DTTC		Flexible Coupling Kit	537626S
	2016.06-		Rear	SUV 4WD DFFA/DTTC		Flexible Coupling Kit	533882S
2.0 (140 kw)	2016.06-		Front	SUV 4WD DFHA		Flexible Coupling	537626
	2016.06-		Rear	SUV 4WD DFHA		Flexible Coupling	533882
	2016.06-		Front	SUV 4WD DFHA		Flexible Coupling Kit	537626S
	2016.06-		Rear	SUV 4WD DFHA		Flexible Coupling Kit	533882S
	2017.05-		Front	SUV 4WD CZPB/DKZA/DNNA		Flexible Coupling	537626
	2017.05-		Rear	SUV 4WD CZPB/DKZA/DNNA		Flexible Coupling	533882
	2017.05-		Front	SUV 4WD CZPB/DKZA/DNNA		Flexible Coupling Kit	537626S
	2017.05-		Rear	SUV 4WD CZPB/DKZA/DNNA		Flexible Coupling Kit	533882S
Leon							
1.8 (132 kw)	2000.03-2004.04		Front	Hatchback 4WD AJQ/ARY		Flexible Coupling	537626
	2000.03-2004.04		Rear	Hatchback 4WD AJQ/ARY		Flexible Coupling	538518
	2000.03-2004.04		Front	Hatchback 4WD AJQ/ARY		Flexible Coupling Kit	537626S
1.9 (110 kw)	2000.08-2006.06		Front	Hatchback 4WD ARL		Flexible Coupling	537626
	2000.08-2006.06		Rear	Hatchback 4WD ARL		Flexible Coupling	538518
	2000.08-2006.06		Front	Hatchback 4WD ARL		Flexible Coupling Kit	537626S
2.8 (150 kw)	2000.10-2006.06		Front	Hatchback 4WD AUE/BDE		Flexible Coupling	537626
	2000.10-2006.06		Rear	Hatchback 4WD AUE/BDE		Flexible Coupling	538518
	2000.10-2006.06		Front	Hatchback 4WD AUE/BDE		Flexible Coupling Kit	537626S
Leon ST							
1.6 (77 kw)	2014.03-2020.08		Front	Estate 4WD CLHA		Flexible Coupling	537626
	2014.03-2020.08		Rear	Estate 4WD CLHA		Flexible Coupling	533882
	2014.03-2020.08		Front	Estate 4WD CLHA		Flexible Coupling Kit	537626S
	2014.03-2020.08		Rear	Estate 4WD CLHA		Flexible Coupling Kit	533882S
1.6 (81 kw)	2014.11-2020.08		Front	Estate 4WD CXXB		Flexible Coupling	537626
	2014.11-2020.08		Front	Estate 4WD CXXB		Flexible Coupling Kit	537626S
1.8 (132 kw)	2014.11-2018.08		Front	Estate 4WD CJSA/CJSB		Flexible Coupling	537626
	2014.11-2018.08		Rear	Estate 4WD CJSA/CJSB		Flexible Coupling	533882
	2014.11-2018.08		Front	Estate 4WD CJSA/CJSB		Flexible Coupling Kit	537626S
	2014.11-2018.08		Rear	Estate 4WD CJSA/CJSB		Flexible Coupling Kit	533882S
2.0 (110 kw)	2014.02-2020.08		Front	Estate 4WD CRBC/CRLB/CRMB/DCYA/DFGA		Flexible Coupling	537626
	2014.02-2020.08		Rear	Estate 4WD CRBC/CRLB/CRMB/DCYA/DFGA		Flexible Coupling	533882
	2014.02-2020.08		Front	Estate 4WD CRBC/CRLB/CRMB/DCYA/DFGA		Flexible Coupling Kit	537626S
	2014.02-2020.08		Rear	Estate 4WD CRBC/CRLB/CRMB/DCYA/DFGA		Flexible Coupling Kit	533882S
	2014.09-2018.08		Front	Combi Van 4WD CRBC/CRLB		Flexible Coupling	537626
	2014.09-2018.08		Rear	Combi Van 4WD CRBC/CRLB		Flexible Coupling	533882
	2014.09-2018.08		Front	Combi Van 4WD CRBC/CRLB		Flexible Coupling Kit	537626S
	2014.09-2018.08		Rear	Combi Van 4WD CRBC/CRLB		Flexible Coupling Kit	533882S
2.0 (135 kw)	2014.10-2018.08		Front	Estate 4WD CUNA/DJGA		Flexible Coupling	537626
	2014.10-2018.08		Rear	Estate 4WD CUNA/DJGA		Flexible Coupling	533882
	2014.10-2018.08		Front	Estate 4WD CUNA/DJGA		Flexible Coupling Kit	537626S
	2014.10-2018.08		Rear	Estate 4WD CUNA/DJGA		Flexible Coupling Kit	533882S
2.0 (221 kw)	2016.11-2018.08		Front	Combi Van 4WD CJXC		Flexible Coupling	537626
	2016.11-2018.08		Front	Combi Van 4WD CJXC		Flexible Coupling Kit	537626S
	2016.11-2020.08		Front	Estate 4WD CJXC/DNUE		Flexible Coupling	537626
	2016.11-2020.08		Front	Estate 4WD CJXC/DNUE		Flexible Coupling Kit	537626S
Tarraco							
2.0 (110 kw)	2018.09-		Front	SUV 4WD DFGA		Flexible Coupling	537626
	2018.09-		Rear	SUV 4WD DFGA		Flexible Coupling	533882
	2018.09-		Front	SUV 4WD DFGA		Flexible Coupling Kit	537626S
	2018.09-		Rear	SUV 4WD DFGA		Flexible Coupling Kit	533882S
2.0 (140 kw)	2018.09-		Front	SUV 4WD DFHA		Flexible Coupling	537626
	2018.09-		Rear	SUV 4WD DFHA		Flexible Coupling	533882
	2018.09-		Front	SUV 4WD DFHA		Flexible Coupling Kit	537626S
	2018.09-		Rear	SUV 4WD DFHA		Flexible Coupling Kit	533882S
	2018.11-		Front	SUV 4WD DKZA/DNNA		Flexible Coupling	537626
	2018.11-		Rear	SUV 4WD DKZA/DNNA		Flexible Coupling	533882
	2018.11-		Front	SUV 4WD DKZA/DNNA		Flexible Coupling Kit	537626S
	2018.11-		Rear	SUV 4WD DKZA/DNNA		Flexible Coupling Kit	533882S

	YEAR	TRANSM.	FITTING POSITION	BODY STYLE & DRIVE TYPE & ENGINE	REMARKS	PRODUCT	GSP Ref.
SKODA							
Karoq							
1.5 (110 kw)	2017.07-		Front	SUV 4WD DADA/DPCA		Flexible Coupling	537626
	2017.07-		Front	SUV 4WD DADA, DPCA		Flexible Coupling	537626
	2017.07-		Rear	SUV 4WD DADA/DPCA		Flexible Coupling	533882
	2017.07-		Rear	SUV 4WD DADA, DPCA		Flexible Coupling	533882
	2017.07-		Front	SUV 4WD DADA/DPCA		Flexible Coupling Kit	537626S
	2017.07-		Front	SUV 4WD DADA, DPCA		Flexible Coupling Kit	537626S
	2017.07-		Rear	SUV 4WD DADA/DPCA		Flexible Coupling Kit	533882S
	2017.07-		Rear	SUV 4WD DADA, DPCA		Flexible Coupling Kit	533882S
2.0 (110 kw)	2017.07-		Front	SUV 4WD DFFA/DTTC		Flexible Coupling	537626
	2017.07-		Rear	SUV 4WD DFFA/DTTC		Flexible Coupling	533882
	2017.07-		Front	SUV 4WD DFFA/DTTC		Flexible Coupling Kit	537626S
	2017.07-		Rear	SUV 4WD DFFA/DTTC		Flexible Coupling Kit	533882S
2.0 (140 kw)	2017.07-		Front	SUV 4WD DFHA		Flexible Coupling	537626
	2017.07-		Rear	SUV 4WD DFHA		Flexible Coupling	533882
	2017.07-		Front	SUV 4WD DFHA		Flexible Coupling Kit	537626S
	2017.07-		Rear	SUV 4WD DFHA		Flexible Coupling Kit	533882S
	2019.04-		Front	SUV 4WD DKZA/DNNA		Flexible Coupling	537626
	2019.04-		Rear	SUV 4WD DKZA/DNNA		Flexible Coupling	533882
	2019.04-		Front	SUV 4WD DKZA/DNNA		Flexible Coupling Kit	537626S
	2019.04-		Rear	SUV 4WD DKZA/DNNA		Flexible Coupling Kit	533882S
Karoq Scout							
2.0 (110 kw)	2018.07-2020.12		Front	SUV 4WD DFFA		Flexible Coupling	537626
	2018.07-2020.12		Rear	SUV 4WD DFFA		Flexible Coupling	533882
	2018.07-2020.12		Front	SUV 4WD DFFA		Flexible Coupling Kit	537626S
	2018.07-2020.12		Rear	SUV 4WD DFFA		Flexible Coupling Kit	533882S
2.0 (140 kw)	2018.07-		Front	SUV 4WD DFHA		Flexible Coupling	537626
	2018.07-		Rear	SUV 4WD DFHA		Flexible Coupling	533882
	2018.07-		Front	SUV 4WD DFHA		Flexible Coupling Kit	537626S
	2018.07-		Rear	SUV 4WD DFHA		Flexible Coupling Kit	533882S
Kodiaq							
1.4 (110 kw)	2016.10-		Rear	SUV 4WD CZDA/CZEA		Propshaft	PS900634
	2016.10-		Front	SUV 4WD CZDA/CZEA		Flexible Coupling	537626
	2016.10-		Front	SUV FWD CZDA/CZEA		Flexible Coupling	537626
	2016.10-		Rear	SUV 4WD CZDA/CZEA		Flexible Coupling	533882
	2016.10-		Rear	SUV FWD CZDA/CZEA		Flexible Coupling	533882
	2016.10-		Front	SUV 4WD CZDA/CZEA		Flexible Coupling Kit	537626S
	2016.10-		Front	SUV FWD CZDA/CZEA		Flexible Coupling Kit	537626S
	2016.10-		Rear	SUV 4WD CZDA/CZEA		Flexible Coupling Kit	533882S
	2016.10-		Rear	SUV FWD CZDA/CZEA		Flexible Coupling Kit	533882S
2.0 (110 kw)	2017.03-		Front	SUV FWD DBGC/DFGA/DTSB		Flexible Coupling	537626
	2017.03-		Front	SUV 4WD DBGC/DFGA/DTSB		Flexible Coupling	537626
	2017.03-		Rear	SUV 4WD DBGC/DFGA/DTSB		Flexible Coupling	533882
	2017.03-		Front	SUV 4WD DBGC/DFGA/DTSB		Flexible Coupling Kit	537626S
	2017.03-		Rear	SUV 4WD DBGC/DFGA/DTSB		Flexible Coupling Kit	533882S
2.0 (130 kw)	2017.04-		Rear	SUV 4WD CRGB		Flexible Coupling Kit	533882S
2.0 (132 kw)	2016.10-		Front	SUV 4WD CZPA		Flexible Coupling	537626
	2016.10-		Rear	SUV 4WD CZPA		Flexible Coupling	533882
	2016.10-		Front	SUV 4WD CZPA		Flexible Coupling Kit	537626S
	2016.10-		Rear	SUV 4WD CZPA		Flexible Coupling Kit	533882S
2.0 (140 kw)	2016.10-		Front	SUV 4WD DFHA		Flexible Coupling	537626
	2016.10-		Rear	SUV 4WD DFHA		Flexible Coupling	533882
	2016.10-		Front	SUV 4WD DFHA		Flexible Coupling Kit	537626S
	2016.10-		Rear	SUV 4WD DFHA		Flexible Coupling Kit	533882S
	2018.12-		Rear	SUV 4WD DKZA/DNNA		Flexible Coupling	533882
	2018.12-		Rear	SUV 4WD DKZA/DNNA		Flexible Coupling Kit	533882S
2.0 (147 kw)	2020.06-		Front	SUV 4WD DTUA		Flexible Coupling	537853
	2020.06-		Rear	SUV 4WD DTUA		Flexible Coupling Kit	533882S
2.0 (176 kw)	2018.07-		Rear	SUV 4WD CUAA		Flexible Coupling Kit	533882S
2.0 (180 kw)	2021.06-		Rear	SUV 4WD DNPA		Flexible Coupling	533882
	2021.06-		Rear	SUV 4WD DNPA		Flexible Coupling Kit	533882S
Kodiaq Scout							
1.4 (110 kw)	2017.05-		Rear	SUV 4WD CZDA/CZEA		Propshaft	PS900634
	2017.05-		Front	SUV 4WD CZDA/CZEA		Flexible Coupling	537626
	2017.05-		Rear	SUV 4WD CZDA/CZEA		Flexible Coupling	533882

	YEAR	TRANSM.	FITTING POSITION	BODY STYLE & DRIVE TYPE & ENGINE	REMARKS	PRODUCT	GSP Ref.
SKODA **Kodiaq Scout**							
1.4 (110 kw)	2017.05-		Front	SUV 4WD CZDA/CZEA		Flexible Coupling Kit	537626S
	2017.05-		Rear	SUV 4WD CZDA/CZEA		Flexible Coupling Kit	533882S
2.0 (110 kw)	2017.05-		Front	SUV 4WD DBGC/DFGA		Flexible Coupling	537626
	2017.05-		Rear	SUV 4WD DBGC/DFGA		Flexible Coupling	533882
	2017.05-		Front	SUV 4WD DBGC/DFGA		Flexible Coupling Kit	537626S
	2017.05-		Rear	SUV 4WD DBGC/DFGA		Flexible Coupling Kit	533882S
2.0 (132 kw)	2017.05-		Front	SUV 4WD CZPA		Flexible Coupling	537626
	2017.05-		Rear	SUV 4WD CZPA		Flexible Coupling	533882
	2017.05-		Front	SUV 4WD CZPA		Flexible Coupling Kit	537626S
	2017.05-		Rear	SUV 4WD CZPA		Flexible Coupling Kit	533882S
2.0 (140 kw)	2017.05-		Front	SUV 4WD DFHA		Flexible Coupling	537626
	2017.05-		Rear	SUV 4WD DFHA		Flexible Coupling	533882
	2017.05-		Front	SUV 4WD DFHA		Flexible Coupling Kit	537626S
	2017.05-		Rear	SUV 4WD DFHA		Flexible Coupling Kit	533882S
	2019.02-		Rear	SUV 4WD DKZA/DNNA		Flexible Coupling	533882
	2019.02-		Rear	SUV 4WD DKZA/DNNA		Flexible Coupling Kit	533882S
Octavia							
1.6 (77 kw)	2009.06-2013.02		Centre	Estate 4WD CAYC		Center Bearing Support Kit	539917S
	2009.06-2013.02		Front	Estate 4WD CAYC		Flexible Coupling	538507
	2009.06-2013.02		Rear	Estate 4WD CAYC	Inner diameter:38mm	Flexible Coupling	533882
	2009.06-2013.02		Rear	Estate 4WD CAYC	Inner diameter:31mm	Flexible Coupling	538518
	2009.06-2013.02		Front	Estate 4WD CAYC	6MT	Flexible Coupling Kit	537626S
	2009.06-2013.02		Front	Estate 4WD CAYC	5MT	Flexible Coupling Kit	538508S
	2009.06-2013.02		Rear	Estate 4WD CAYC		Flexible Coupling Kit	533882S
	2013.05-2015.05		Front	Estate 4WD CLHA		Flexible Coupling	537626
	2013.05-2015.05		Front	Hatchback 4WD CLHA		Flexible Coupling	537626
	2013.05-2015.05		Rear	Estate 4WD CLHA		Flexible Coupling	533882
	2013.05-2015.05		Rear	Hatchback 4WD CLHA		Flexible Coupling	533882
	2013.05-2015.05		Front	Estate 4WD CLHA		Flexible Coupling Kit	537626S
	2013.05-2015.05		Front	Hatchback 4WD CLHA		Flexible Coupling Kit	537626S
	2013.05-2015.05		Rear	Estate 4WD CLHA		Flexible Coupling Kit	533882S
	2013.05-2015.05		Rear	Hatchback 4WD CLHA		Flexible Coupling Kit	533882S
1.6 (81 kw)	2015.05-2017.02		Front	Hatchback 4WD CRKB/CXXB		Flexible Coupling	537626
	2015.05-2017.02		Front	Estate 4WD CRKB/CXXB		Flexible Coupling	537626
	2015.05-2017.02		Rear	Hatchback 4WD CRKB/CXXB		Flexible Coupling	533882
	2015.05-2017.02		Rear	Estate 4WD CRKB/CXXB		Flexible Coupling	533882
	2015.05-2017.02		Front	Hatchback 4WD CRKB/CXXB		Flexible Coupling Kit	537626S
	2015.05-2017.02		Front	Estate 4WD CRKB/CXXB		Flexible Coupling Kit	537626S
	2015.05-2017.02		Rear	Hatchback 4WD CRKB/CXXB		Flexible Coupling Kit	533882S
	2015.05-2017.02		Rear	Estate 4WD CRKB/CXXB		Flexible Coupling Kit	533882S
1.8 (110 kw)	2000.08-2006.05		Front	Estate 4WD ARX		Flexible Coupling	538507
	2000.08-2006.05		Front	Hatchback 4WD ARX		Flexible Coupling	538507
	2000.08-2006.05		Rear	Estate 4WD ARX		Flexible Coupling	538518
	2000.08-2006.05		Rear	Hatchback 4WD ARX		Flexible Coupling	538518
	2000.08-2006.05		Front	Estate 4WD ARX	6MT	Flexible Coupling Kit	537626S
	2000.08-2006.05		Front	Hatchback 4WD ARX	6MT	Flexible Coupling Kit	537626S
	2000.08-2006.05		Front	Estate 4WD ARX	5MT	Flexible Coupling Kit	538508S
	2000.08-2006.05		Front	Hatchback 4WD ARX	5MT	Flexible Coupling Kit	538508S
1.8 (112 kw)	2009.03-2013.02		Centre	Estate 4WD CDAB		Center Bearing Support Kit	539917S
	2009.03-2013.02		Front	Estate 4WD CDAB		Flexible Coupling	538507
	2009.03-2013.02		Rear	Estate 4WD CDAB	Inner diameter:38mm	Flexible Coupling	533882
	2009.03-2013.02		Rear	Estate 4WD CDAB	Inner diameter:31mm	Flexible Coupling	538518
	2009.03-2013.02		Front	Estate 4WD CDAB	6MT	Flexible Coupling Kit	537626S
	2009.03-2013.02		Front	Estate 4WD CDAB	5MT	Flexible Coupling Kit	538508S
	2009.03-2013.02		Rear	Estate 4WD CDAB		Flexible Coupling Kit	533882S
1.8 (118 kw)	2008.11-2013.02		Centre	Estate 4WD CDAA		Center Bearing Support Kit	539917S
	2008.11-2013.02		Front	Estate 4WD CDAA		Flexible Coupling	538507
	2008.11-2013.02		Rear	Estate 4WD CDAA	Inner diameter:38mm	Flexible Coupling	533882
	2008.11-2013.02		Rear	Estate 4WD CDAA	Inner diameter:31mm	Flexible Coupling	538518
	2008.11-2013.02		Front	Estate 4WD CDAA	6MT	Flexible Coupling Kit	537626S
	2008.11-2013.02		Front	Estate 4WD CDAA	5MT	Flexible Coupling Kit	538508S
	2008.11-2013.02		Rear	Estate 4WD CDAA		Flexible Coupling Kit	533882S
1.8 (132 kw)	2012.11-2017.02		Front	Estate 4WD CJSB		Flexible Coupling	537626
	2012.11-2017.02		Rear	Estate 4WD CJSB		Flexible Coupling	533882

	YEAR	TRANSM.	FITTING POSITION	BODY STYLE & DRIVE TYPE & ENGINE	REMARKS	PRODUCT	GSP Ref.
SKODA **Octavia**							
1.8 (132 kw)	2012.11-2017.02		Front	Estate 4WD CJSB		Flexible Coupling Kit	537626S
	2012.11-2017.02		Rear	Estate 4WD CJSB		Flexible Coupling Kit	533882S
	2014.05-2020.10		Front	Hatchback 4WD CJSB		Flexible Coupling Kit	537626S
1.9 (66 kw)	1999.11-2006.02		Front	Estate 4WD AGR		Flexible Coupling	538507
	1999.11-2006.02		Rear	Estate 4WD AGR		Flexible Coupling	538518
	1999.11-2006.02		Front	Estate 4WD AGR	6MT	Flexible Coupling Kit	537626S
	1999.11-2006.02		Front	Estate 4WD AGR	5MT	Flexible Coupling Kit	538508S
1.9 (74 kw)	2000.08-2006.01		Front	Estate 4WD ATD	6MT	Flexible Coupling	537626
	2000.08-2006.01		Front	Estate 4WD ATD	5MT	Flexible Coupling	538507
	2000.08-2006.01		Rear	Estate 4WD ATD		Flexible Coupling	538518
	2000.08-2006.01		Front	Estate 4WD ATD	6MT	Flexible Coupling Kit	537626S
	2000.08-2006.01		Front	Estate 4WD ATD	5MT	Flexible Coupling Kit	538508S
1.9 (77 kw)	2004.11-2010.12		Front	Estate 4WD BKC/BLS/BXE	6MT	Flexible Coupling	537626
	2004.11-2010.12		Front	Estate 4WD BKC/BLS/BXE	5MT	Flexible Coupling	538507
	2004.11-2010.12		Rear	Estate 4WD BKC/BLS/BXE	Inner diameter:38mm	Flexible Coupling	533882
	2004.11-2010.12		Rear	Estate 4WD BKC/BLS/BXE	Inner diameter:31mm	Flexible Coupling	538518
	2004.11-2010.12		Front	Estate 4WD BKC/BLS/BXE	6MT	Flexible Coupling Kit	537626S
	2004.11-2010.12		Front	Estate 4WD BKC/BLS/BXE	5MT	Flexible Coupling Kit	538508S
	2004.11-2010.12		Rear	Estate 4WD BKC/BLS/BXE		Flexible Coupling Kit	533882S
2.0 (81 kw)	2011.05-2013.02		Centre	Estate 4WD CFHF		Center Bearing Support Kit	539917S
	2011.05-2013.02		Rear	Estate 4WD CFHF		Flexible Coupling	533882
	2011.05-2013.02		Front	Estate 4WD CFHF	6MT	Flexible Coupling Kit	537626S
	2011.05-2013.02		Rear	Estate 4WD CFHF		Flexible Coupling Kit	533882S
2.0 (85 kw)	1999.11-2004.09		Front	Estate 4WD AZH/AZJ		Flexible Coupling	538507
	1999.11-2004.09		Rear	Estate 4WD AZH/AZJ		Flexible Coupling	538518
	1999.11-2004.09		Front	Estate 4WD AZH/AZJ	6MT	Flexible Coupling Kit	537626S
	1999.11-2004.09		Front	Estate 4WD AZH/AZJ	5MT	Flexible Coupling Kit	538508S
2.0 (103 kw)	2006.07-2010.05		Centre	Estate 4WD BMM		Center Bearing Support Kit	539917S
	2006.07-2010.05		Front	Estate 4WD BMM	6MT	Flexible Coupling	537626
	2006.07-2010.05		Front	Estate 4WD BMM	5MT	Flexible Coupling	538507
	2006.07-2010.05		Rear	Estate 4WD BMM	Inner diameter:38mm	Flexible Coupling	533882
	2006.07-2010.05		Rear	Estate 4WD BMM	Inner diameter:31mm	Flexible Coupling	538518
	2006.07-2010.05		Front	Estate 4WD BMM	6MT	Flexible Coupling Kit	537626S
	2006.07-2010.05		Front	Estate 4WD BMM	5MT	Flexible Coupling Kit	538508S
	2006.07-2010.05		Rear	Estate 4WD BMM		Flexible Coupling Kit	533882S
	2010.05-2013.02		Centre	Estate 4WD CFHC		Center Bearing Support Kit	539917S
	2010.05-2013.02		Front	Estate 4WD CFHC		Flexible Coupling	538507
	2010.05-2013.02		Rear	Estate 4WD CFHC	Inner diameter:38mm	Flexible Coupling	533882
	2010.05-2013.02		Rear	Estate 4WD CFHC	Inner diameter:31mm	Flexible Coupling	538518
	2010.05-2013.02		Front	Estate 4WD CFHC	6MT	Flexible Coupling Kit	537626S
	2010.05-2013.02		Front	Estate 4WD CFHC	5MT	Flexible Coupling Kit	538508S
	2010.05-2013.02		Rear	Estate 4WD CFHC		Flexible Coupling Kit	533882S
2.0 (110 kw)	2004.11-2008.10		Front	Estate 4WD BLX/BVX	6MT	Flexible Coupling	537626
	2004.11-2008.10		Front	Estate 4WD BLX/BVX	5MT	Flexible Coupling	538507
	2004.11-2008.10		Rear	Estate 4WD BLX/BVX	Inner diameter:38mm	Flexible Coupling	533882
	2004.11-2008.10		Rear	Estate 4WD BLX/BVX	Inner diameter:31mm	Flexible Coupling	538518
	2004.11-2008.10		Front	Estate 4WD BLX/BVX	6MT	Flexible Coupling Kit	537626S
	2004.11-2008.10		Front	Estate 4WD BLX/BVX	5MT	Flexible Coupling Kit	538508S
	2004.11-2008.10		Rear	Estate 4WD BLX/BVX		Flexible Coupling Kit	533882S
	2013.05-2020.10		Front	Estate 4WD CKFC/CRMB/DCYA		Flexible Coupling	537626
	2013.05-2020.10		Front	Hatchback 4WD CKFC/CRMB/DCYA/DFFA		Flexible Coupling	537626
	2013.05-2020.10		Rear	Estate 4WD CKFC/CRMB/DCYA		Flexible Coupling	533882
	2013.05-2020.10		Rear	Hatchback 4WD CKFC/CRMB/DCYA/DFFA		Flexible Coupling	533882
	2013.05-2020.10		Front	Estate 4WD CKFC/CRMB/DCYA		Flexible Coupling Kit	537626S
	2013.05-2020.10		Front	Hatchback 4WD CKFC/CRMB/DCYA/DFFA		Flexible Coupling Kit	537626S
	2013.05-2020.10		Rear	Estate 4WD CKFC/CRMB/DCYA		Flexible Coupling Kit	533882S
	2013.05-2020.10		Rear	Hatchback 4WD CKFC/CRMB/DCYA/DFFA		Flexible Coupling Kit	533882S
	2020.09-		Front	Estate 4WD DTTC		Flexible Coupling	537626
	2020.09-		Rear	Estate 4WD DTTC		Flexible Coupling	533882
	2020.09-		Front	Estate 4WD DTTC		Flexible Coupling Kit	537626S
	2020.09-		Rear	Estate 4WD DTTC		Flexible Coupling Kit	533882S
2.0 (135 kw)	2013.05-2020.10		Front	Hatchback 4WD CUNA/CUPA/DJGA		Flexible Coupling	537626
	2013.05-2020.10		Front	Estate 4WD CUNA		Flexible Coupling	537626
	2013.05-2020.10		Rear	Hatchback 4WD CUNA/CUPA/DJGA		Flexible Coupling	533882

	YEAR	TRANSM.	FITTING POSITION	BODY STYLE & DRIVE TYPE & ENGINE	REMARKS	PRODUCT	GSP Ref.
SKODA							
Octavia							
2.0 (135 kw)	2013.05-2020.10		Rear	Estate 4WD CUNA		Flexible Coupling	533882
	2013.05-2020.10		Front	Hatchback 4WD CUNA/CUPA/DJGA		Flexible Coupling Kit	537626S
	2013.05-2020.10		Front	Estate 4WD CUNA		Flexible Coupling Kit	537626S
	2013.05-2020.10		Rear	Hatchback 4WD CUNA/CUPA/DJGA		Flexible Coupling Kit	533882S
	2013.05-2020.10		Rear	Estate 4WD CUNA		Flexible Coupling Kit	533882S
2.0 (140 kw)	2019.02-2020.10		Front	Hatchback 4WD DKZA		Flexible Coupling Kit	537626S
	2019.02-2020.10		Front	Estate 4WD DKZA		Flexible Coupling Kit	537626S
	2019.02-2020.10		Rear	Hatchback 4WD DKZA		Flexible Coupling Kit	533882S
	2019.02-2020.10		Rear	Estate 4WD DKZA		Flexible Coupling Kit	533882S
	2020.09-		Front	Estate 4WD DNNA		Flexible Coupling	537626
	2020.09-		Rear	Estate 4WD DNNA		Flexible Coupling	533882
	2020.09-		Front	Estate 4WD DNNA		Flexible Coupling Kit	537626S
	2020.09-		Rear	Estate 4WD DNNA		Flexible Coupling Kit	533882S
2.0 (147 kw)	2020.07-		Front	Estate 4WD DTUA		Flexible Coupling	537626
	2020.07-		Front	Hatchback 4WD DTUA		Flexible Coupling	537626
	2020.07-		Rear	Estate 4WD DTUA		Flexible Coupling	533882
	2020.07-		Rear	Hatchback 4WD DTUA		Flexible Coupling	533882
	2020.07-		Front	Estate 4WD DTUA		Flexible Coupling Kit	537626S
	2020.07-		Front	Hatchback 4WD DTUA		Flexible Coupling Kit	537626S
	2020.07-		Rear	Estate 4WD DTUA		Flexible Coupling Kit	533882S
	2020.07-		Rear	Hatchback 4WD DTUA		Flexible Coupling Kit	533882S
Octavia Scout							
1.6 (81 kw)	2015.05-2017.02		Front	Estate 4WD CRKB/CXXB/DBKA		Flexible Coupling	537626
	2015.05-2017.02		Rear	Estate 4WD CRKB/CXXB/DBKA		Flexible Coupling	533882
	2015.05-2017.02		Front	Estate 4WD CRKB/CXXB/DBKA		Flexible Coupling Kit	537626S
	2015.05-2017.02		Rear	Estate 4WD CRKB/CXXB/DBKA		Flexible Coupling Kit	533882S
1.8 (112 kw)	2009.03-2009.05		Centre	Estate 4WD CDAB		Center Bearing Support Kit	539917S
	2009.03-2009.05		Front	Estate 4WD CDAB		Flexible Coupling	538507
	2009.03-2009.05		Rear	Estate 4WD CDAB	Inner diameter:38mm	Flexible Coupling	533882
	2009.03-2009.05		Rear	Estate 4WD CDAB	Inner diameter:31mm	Flexible Coupling	538518
	2009.03-2009.05		Front	Estate 4WD CDAB	6MT	Flexible Coupling Kit	537626S
	2009.03-2009.05		Front	Estate 4WD CDAB	5MT	Flexible Coupling Kit	538508S
	2009.03-2009.05		Rear	Estate 4WD CDAB		Flexible Coupling Kit	533882S
1.8 (118 kw)	2008.11-2013.02		Centre	Estate 4WD CDAA		Center Bearing Support Kit	539917S
	2008.11-2013.02		Front	Estate 4WD CDAA		Flexible Coupling	538507
	2008.11-2013.02		Rear	Estate 4WD CDAA	Inner diameter:38mm	Flexible Coupling	533882
	2008.11-2013.02		Rear	Estate 4WD CDAA	Inner diameter:31mm	Flexible Coupling	538518
	2008.11-2013.02		Front	Estate 4WD CDAA	6MT	Flexible Coupling Kit	537626S
	2008.11-2013.02		Front	Estate 4WD CDAA	5MT	Flexible Coupling Kit	538508S
	2008.11-2013.02		Rear	Estate 4WD CDAA		Flexible Coupling Kit	533882S
1.8 (132 kw)	2014.08-2017.02		Front	Estate 4WD CJSB		Flexible Coupling	537626
	2014.08-2017.02		Rear	Estate 4WD CJSB		Flexible Coupling	533882
	2014.08-2017.02		Front	Estate 4WD CJSB		Flexible Coupling Kit	537626S
	2014.08-2017.02		Rear	Estate 4WD CJSB		Flexible Coupling Kit	533882S
2.0 (103 kw)	2004.02-2013.03		Centre	Estate 4WD BKD/CFHC/CLCB		Center Bearing Support Kit	539917S
	2004.02-2013.03		Front	Estate 4WD BKD/CFHC/CLCB		Flexible Coupling	538507
	2004.02-2013.03		Rear	Estate 4WD BKD/CFHC/CLCB	Inner diameter:38mm	Flexible Coupling	533882
	2004.02-2013.03		Rear	Estate 4WD BKD/CFHC/CLCB	Inner diameter:31mm	Flexible Coupling	538518
	2004.02-2013.03		Front	Estate 4WD BKD/CFHC/CLCB	6MT	Flexible Coupling Kit	537626S
	2004.02-2013.03		Front	Estate 4WD BKD/CFHC/CLCB	5MT	Flexible Coupling Kit	538508S
	2004.02-2013.03		Rear	Estate 4WD BKD/CFHC/CLCB		Flexible Coupling Kit	533882S
	2006.10-2010.05		Centre	Estate 4WD BMM		Center Bearing Support Kit	539917S
	2006.10-2010.05		Front	Estate 4WD BMM	6MT	Flexible Coupling	537626
	2006.10-2010.05		Front	Estate 4WD BMM	5MT	Flexible Coupling	538507
	2006.10-2010.05		Rear	Estate 4WD BMM	Inner diameter:38mm	Flexible Coupling	533882
	2006.10-2010.05		Rear	Estate 4WD BMM	Inner diameter:31mm	Flexible Coupling	538518
	2006.10-2010.05		Front	Estate 4WD BMM	6MT	Flexible Coupling Kit	537626S
	2006.10-2010.05		Front	Estate 4WD BMM	5MT	Flexible Coupling Kit	538508S
	2006.10-2010.05		Rear	Estate 4WD BMM		Flexible Coupling Kit	533882S
2.0 (110 kw)	2004.11-2009.04		Front	Estate 4WD BLX/BLY/BVX	6MT	Flexible Coupling	537626
	2004.11-2009.04		Front	Estate 4WD BLX/BLY/BVX	5MT	Flexible Coupling	538507
	2004.11-2009.04		Rear	Estate 4WD BLX/BLY/BVX	Inner diameter:38mm	Flexible Coupling	533882
	2004.11-2009.04		Rear	Estate 4WD BLX/BLY/BVX	Inner diameter:31mm	Flexible Coupling	538518
	2004.11-2009.04		Front	Estate 4WD BLX/BLY/BVX	6MT	Flexible Coupling Kit	537626S

	YEAR	TRANSM.	FITTING POSITION	BODY STYLE & DRIVE TYPE & ENGINE	REMARKS	PRODUCT	GSP Ref.
SKODA							
Octavia Scout							
2.0 (110 kw)	2004.11-2009.04		Front	Estate 4WD BLX/BLY/BVX	5MT	Flexible Coupling Kit	538508S
	2004.11-2009.04		Rear	Estate 4WD BLX/BLY/BVX		Flexible Coupling Kit	533882S
	2012.11-2020.10		Front	Estate 4WD CKFC/CRMB/DCYA/DFFA		Flexible Coupling	537626
	2012.11-2020.10		Rear	Estate 4WD CKFC/CRMB/DCYA/DFFA		Flexible Coupling	533882
	2012.11-2020.10		Front	Estate 4WD CKFC/CRMB/DCYA/DFFA		Flexible Coupling Kit	537626S
	2012.11-2020.10		Rear	Estate 4WD CKFC/CRMB/DCYA/DFFA		Flexible Coupling Kit	533882S
2.0 (135 kw)	2013.05-2020.10		Front	Estate 4WD CUNA/CUPA/DJGA		Flexible Coupling	537626
	2013.05-2020.10		Rear	Estate 4WD CUNA/CUPA/DJGA		Flexible Coupling	533882
	2013.05-2020.10		Front	Estate 4WD CUNA/CUPA/DJGA		Flexible Coupling Kit	537626S
	2013.05-2020.10		Rear	Estate 4WD CUNA/CUPA/DJGA		Flexible Coupling Kit	533882S
2.0 (140 kw)	2019.02-2020.10		Front	Estate 4WD DKZA		Flexible Coupling Kit	537626S
	2019.02-2020.10		Rear	Estate 4WD DKZA		Flexible Coupling Kit	533882S
2.0 (147 kw)	2020.06-		Front	Estate 4WD DTUA		Flexible Coupling	537626
	2020.06-		Front	Estate 4WD DTUA		Flexible Coupling Kit	537626S
	2020.06-		Rear	Estate 4WD DTUA		Flexible Coupling Kit	533882S
Superb							
1.4 (110 kw)	2015.03-		Front	Estate 4WD CZEA		Flexible Coupling	537626
	2015.03-		Front	Hatchback 4WD CZEA		Flexible Coupling	537626
	2015.03-		Rear	Estate 4WD CZEA		Flexible Coupling	533882
	2015.03-		Rear	Hatchback 4WD CZEA		Flexible Coupling	533882
	2015.03-		Front	Estate 4WD CZEA		Flexible Coupling Kit	537626S
	2015.03-		Front	Hatchback 4WD CZEA		Flexible Coupling Kit	537626S
	2015.03-		Rear	Estate 4WD CZEA		Flexible Coupling Kit	533882S
	2015.03-		Rear	Hatchback 4WD CZEA		Flexible Coupling Kit	533882S
1.8 (112 kw)	2009.03-2015.05		Rear	Hatchback 4WD CDAB		Flexible Coupling	533882
	2009.03-2015.05		Rear	Estate 4WD CDAB		Flexible Coupling	533882
	2009.03-2015.05		Front	Hatchback 4WD CDAB		Flexible Coupling Kit	537626S
	2009.03-2015.05		Front	Estate 4WD CDAB		Flexible Coupling Kit	537626S
	2009.03-2015.05		Rear	Hatchback 4WD CDAB		Flexible Coupling Kit	533882S
	2009.03-2015.05		Rear	Estate 4WD CDAB		Flexible Coupling Kit	533882S
1.8 (118 kw)	2008.11-2015.05		Rear	Hatchback 4WD CDAA		Flexible Coupling	533882
	2008.11-2015.05		Front	Hatchback 4WD CDAA		Flexible Coupling Kit	537626S
	2008.11-2015.05		Rear	Hatchback 4WD CDAA		Flexible Coupling Kit	533882S
	2009.10-2015.05		Rear	Estate 4WD CDAA		Flexible Coupling	533882
	2009.10-2015.05		Front	Estate 4WD CDAA		Flexible Coupling Kit	537626S
	2009.10-2015.05		Rear	Estate 4WD CDAA		Flexible Coupling Kit	533882S
2.0 (103 kw)	2010.11-2015.05		Rear	Hatchback 4WD CFFB		Flexible Coupling	533882
	2010.11-2015.05		Rear	Estate 4WD CFFB		Flexible Coupling	533882
	2010.11-2015.05		Front	Hatchback 4WD CFFB		Flexible Coupling Kit	537626S
	2010.11-2015.05		Front	Estate 4WD CFFB		Flexible Coupling Kit	537626S
	2010.11-2015.05		Rear	Hatchback 4WD CFFB		Flexible Coupling Kit	533882S
	2010.11-2015.05		Rear	Estate 4WD CFFB		Flexible Coupling Kit	533882S
2.0 (110 kw)	2015.03-		Front	Hatchback 4WD CRLB/DFEA/DFGA		Flexible Coupling	537626
	2015.03-		Front	Estate 4WD CRLB/DFEA/DFGA		Flexible Coupling	537626
	2015.03-		Rear	Hatchback 4WD CRLB/DFEA/DFGA		Flexible Coupling	533882
	2015.03-		Rear	Estate 4WD CRLB/DFEA/DFGA		Flexible Coupling	533882
	2015.03-		Front	Hatchback 4WD CRLB/DFEA/DFGA		Flexible Coupling Kit	537626S
	2015.03-		Front	Estate 4WD CRLB/DFEA/DFGA		Flexible Coupling Kit	537626S
	2015.03-		Rear	Hatchback 4WD CRLB/DFEA/DFGA		Flexible Coupling Kit	533882S
	2015.03-		Rear	Estate 4WD CRLB/DFEA/DFGA		Flexible Coupling Kit	533882S
2.0 (125 kw)	2008.09-2015.05		Rear	Hatchback 4WD CBBB/CFGB		Flexible Coupling	533882
	2008.09-2015.05		Front	Hatchback 4WD CBBB/CFGB		Flexible Coupling Kit	537626S
	2008.09-2015.05		Rear	Hatchback 4WD CBBB/CFGB		Flexible Coupling Kit	533882S
	2009.10-2015.05		Rear	Estate 4WD CBBB/CFGB		Flexible Coupling	533882
	2009.10-2015.05		Front	Estate 4WD CBBB/CFGB		Flexible Coupling Kit	537626S
	2009.10-2015.05		Rear	Estate 4WD CBBB/CFGB		Flexible Coupling Kit	533882S
2.0 (140 kw)	2015.03-		Front	Estate 4WD DDAA/DFCA/DFHA		Flexible Coupling	537626
	2015.03-		Rear	Estate 4WD DDAA/DFCA/DFHA		Flexible Coupling	533882
	2015.03-		Front	Estate 4WD DDAA/DFCA/DFHA		Flexible Coupling Kit	537626S
	2015.03-		Rear	Estate 4WD DDAA/DFCA/DFHA		Flexible Coupling Kit	533882S
	2015.08-		Front	Hatchback 4WD DDAA/DFCA		Flexible Coupling	537626
	2015.08-		Rear	Hatchback 4WD DDAA/DFCA		Flexible Coupling	533882
	2015.08-		Front	Hatchback 4WD DDAA/DFCA		Flexible Coupling Kit	537626S
	2015.08-		Rear	Hatchback 4WD DDAA/DFCA		Flexible Coupling Kit	533882S

	YEAR	TRANSM.	FITTING POSITION	BODY STYLE & DRIVE TYPE & ENGINE	REMARKS	PRODUCT	GSP Ref.
SKODA							
Superb							
2.0 (147 kw)	2020.09-		Front	Estate 4WD DTUA		Flexible Coupling	537626
	2020.09-		Front	Hatchback 4WD DTUA		Flexible Coupling	537626
	2020.09-		Rear	Estate 4WD DTUA		Flexible Coupling	533882
	2020.09-		Rear	Hatchback 4WD DTUA		Flexible Coupling	533882
	2020.09-		Front	Estate 4WD DTUA		Flexible Coupling Kit	537626S
	2020.09-		Front	Hatchback 4WD DTUA		Flexible Coupling Kit	537626S
	2020.09-		Rear	Estate 4WD DTUA		Flexible Coupling Kit	533882S
	2020.09-		Rear	Hatchback 4WD DTUA		Flexible Coupling Kit	533882S
2.0 (200 kw)	2015.03-		Front	Hatchback 4WD DNUA		Flexible Coupling	537626
	2015.03-		Front	Estate 4WD DNUA		Flexible Coupling	537626
	2015.03-		Rear	Hatchback 4WD DNUA		Flexible Coupling	533882
	2015.03-		Rear	Estate 4WD DNUA		Flexible Coupling	533882
	2015.03-		Front	Hatchback 4WD DNUA		Flexible Coupling Kit	537626S
	2015.03-		Front	Estate 4WD DNUA		Flexible Coupling Kit	537626S
	2015.03-		Rear	Hatchback 4WD DNUA		Flexible Coupling Kit	533882S
	2015.03-		Rear	Estate 4WD DNUA		Flexible Coupling Kit	533882S
2.0 (206 kw)	2015.03-		Front	Hatchback 4WD CJXA/DNFE		Flexible Coupling	537626
	2015.03-		Front	Estate 4WD CJXA/DNFE		Flexible Coupling	537626
	2015.03-		Rear	Hatchback 4WD CJXA/DNFE		Flexible Coupling	533882
	2015.03-		Rear	Estate 4WD CJXA/DNFE		Flexible Coupling	533882
	2015.03-		Front	Hatchback 4WD CJXA/DNFE		Flexible Coupling Kit	537626S
	2015.03-		Front	Estate 4WD CJXA/DNFE		Flexible Coupling Kit	537626S
	2015.03-		Rear	Hatchback 4WD CJXA/DNFE		Flexible Coupling Kit	533882S
	2015.03-		Rear	Estate 4WD CJXA/DNFE		Flexible Coupling Kit	533882S
3.6 (191 kw)	2008.09-2015.05		Rear	Hatchback 4WD CDVA		Flexible Coupling	533882
	2008.09-2015.05		Front	Hatchback 4WD CDVA		Flexible Coupling Kit	537626S
	2008.09-2015.05		Rear	Hatchback 4WD CDVA		Flexible Coupling Kit	533882S
	2009.10-2015.05		Rear	Estate 4WD CDVA		Flexible Coupling	533882
	2009.10-2015.05		Front	Estate 4WD CDVA		Flexible Coupling Kit	537626S
	2009.10-2015.05		Rear	Estate 4WD CDVA		Flexible Coupling Kit	533882S
Yeti							
1.4 (110 kw)	2015.05-2017.12		Centre	SUV 4WD CZDA		Center Bearing Support Kit	539917S
	2015.05-2017.12		Rear	SUV 4WD CZDA		Flexible Coupling	533882
	2015.05-2017.12		Rear	SUV 4WD CZDA		Flexible Coupling Kit	533882S
1.8 (112 kw)	2009.11-2017.12		Centre	SUV 4WD CDAB		Center Bearing Support Kit	539917S
	2009.11-2017.12		Rear	SUV 4WD CDAB		Flexible Coupling	533882
	2009.11-2017.12		Front	SUV 4WD CDAB		Flexible Coupling Kit	537626S
	2009.11-2017.12		Rear	SUV 4WD CDAB		Flexible Coupling Kit	533882S
1.8 (118 kw)	2009.05-2017.12		Centre	SUV 4WD CDAA		Center Bearing Support Kit	539917S
	2009.05-2017.12		Rear	SUV 4WD CDAA		Flexible Coupling	533882
	2009.05-2017.12		Front	SUV 4WD CDAA		Flexible Coupling Kit	537626S
	2009.05-2017.12		Rear	SUV 4WD CDAA		Flexible Coupling Kit	533882S
2.0 (81 kw)	2009.11-2017.12		Centre	SUV 4WD CFHF/CUUA/DFSA		Center Bearing Support Kit	539917S
	2009.11-2017.12		Rear	SUV 4WD CFHF/CUUA/DFSA		Flexible Coupling	533882
	2009.11-2017.12		Front	SUV 4WD CFHF/CUUA/DFSA		Flexible Coupling Kit	537626S
	2009.11-2017.12		Rear	SUV 4WD CFHF/CUUA/DFSA		Flexible Coupling Kit	533882S
2.0 (103 kw)	2009.05-2017.12		Centre	SUV 4WD CBDB/CFHC/CLCB		Center Bearing Support Kit	539917S
	2009.05-2017.12		Rear	SUV 4WD CBDB/CFHC/CLCB		Flexible Coupling	533882
	2009.05-2017.12		Front	SUV 4WD CBDB/CFHC/CLCB		Flexible Coupling Kit	537626S
	2009.05-2017.12		Rear	SUV 4WD CBDB/CFHC/CLCB		Flexible Coupling Kit	533882S
2.0 (110 kw)	2015.05-2017.12		Centre	SUV 4WD CUUB/DFSB		Center Bearing Support Kit	539917S
	2015.05-2017.12		Rear	SUV 4WD CUUB/DFSB		Flexible Coupling	533882
	2015.05-2017.12		Rear	SUV 4WD CUUB/DFSB		Flexible Coupling Kit	533882S
2.0 (125 kw)	2009.11-2015.12		Centre	SUV 4WD CEGA/CFJA		Center Bearing Support Kit	539917S
	2009.11-2015.12		Rear	SUV 4WD CEGA/CFJA		Flexible Coupling	533882
	2009.11-2015.12		Front	SUV 4WD CEGA/CFJA		Flexible Coupling Kit	537626S
	2009.11-2015.12		Rear	SUV 4WD CEGA/CFJA		Flexible Coupling Kit	533882S
SSANGYONG							
Actyon							
2.0 (100 kw)	2007.07-2013.06		Centre	SUV 4WD D20DT		Center Bearing Support	538625
	2007.07-2013.06		Front;Rear	SUV 4WD D20DT	Date from:2010.08	Flexible Coupling	533419
2.0 (104 kw)	2006.04-2013.06		Centre	SUV 4WD D20DT		Center Bearing Support	538625
	2006.04-2013.06		Front;Rear	SUV 4WD D20DT		Flexible Coupling	533419

	YEAR	TRANSM.	FITTING POSITION	BODY STYLE & DRIVE TYPE & ENGINE	REMARKS	PRODUCT	GSP Ref.
SSANGYONG							
Actyon							
2.0 (110 kw)	2011.01-		Centre	SUV 4WD G20DF		Center Bearing Support	538625
	2011.01-		Centre	SUV 4WD D20DTF		Center Bearing Support	538625
2.0 (129 kw)	2011.01-		Centre	SUV 4WD D20DTF		Center Bearing Support	538625
2.3 (110 kw)	2006.11-		Centre	SUV 4WD G23D		Center Bearing Support	538625
Actyon Sports							
2.0 (104 kw)	2007.04-2013.06		Centre	Pickup 4WD D20DT		Center Bearing Support	538625
	2007.04-2013.06		Front;Rear	Pickup 4WD D20DT		Flexible Coupling	533419
2.0 (114 kw)	2012.01-		Centre	Pickup 4WD D20DTR		Center Bearing Support	538625
2.2 (131 kw)	2015.07-		Front;Rear	Pickup 4WD D22DTR(672980)		Flexible Coupling	533419
Chairman CM600S							
3.2 (162 kw)	1997.08-2008.08		Front;Rear	Saloon RWD 104992		Flexible Coupling	510579
Korando							
2.0 (110 kw)	2010.11-		Front;Rear	SUV 4WD D20DTF		Flexible Coupling	533419
	2012.02-		Front;Rear	SUV 4WD G20D		Flexible Coupling	533419
	2015.07-		Front;Rear	SUV Van 4WD G20D		Flexible Coupling	533419
2.0 (129 kw)	2010.07-		Front;Rear	SUV 4WD D20DTF		Flexible Coupling	533419
	2010.11-		Front;Rear	SUV Van 4WD D20DTF		Flexible Coupling	533419
2.2 (131 kw)	2015.07-		Front;Rear	SUV 4WD D22DTF		Flexible Coupling	533419
	2015.07-		Front;Rear	SUV Van 4WD D22DTF		Flexible Coupling	533419
Korando Sports							
2.2 (131 kw)	2015.07-		Front;Rear	Pickup 4WD D22DTR(672980)		Flexible Coupling	533419
Kyron							
2.0 (100 kw)	2005.09-2014.12	AT/MT	Front	SUV 4WD D20DT		Propshaft	PS900458
	2005.09-2014.12		Centre	SUV 4WD D20DT		Center Bearing Support	538625
	2005.09-2014.12		Centre	SUV RWD D20DT		Center Bearing Support	538625
2.0 (101 kw)	2005.05-2014.12		Centre	SUV 4WD D20DT		Center Bearing Support	538625
2.0 (102 kw)	2006.01-2014.12		Front	SUV 4WD D20DT		Propshaft	PS900459
	2006.01-2014.12		Centre	SUV RWD D20DT		Center Bearing Support	538625
	2006.01-2014.12		Centre	SUV 4WD D20DT		Center Bearing Support	538625
2.0 (104 kw)	2005.09-2014.12	AT/MT	Front	SUV 4WD D20DT		Propshaft	PS900458
	2005.09-2014.12		Centre	SUV 4WD D20DT		Center Bearing Support	538625
	2005.09-2014.12		Centre	SUV RWD D20DT		Center Bearing Support	538625
2.3 (110 kw)	2006.11-2014.12		Centre	SUV 4WD E23		Center Bearing Support	538625
	2010.01-2014.12		Centre	SUV RWD E23		Center Bearing Support	538625
2.7 (120 kw)	2005.05-2014.12		Centre	SUV 4WD D27DT		Center Bearing Support	538625
2.7 (121 kw)	2005.05-2014.12	AT/MT	Front	SUV 4WD D27DT		Propshaft	PS900458
	2005.05-2014.12		Centre	SUV 4WD D27DT		Center Bearing Support	538625
3.2 (162 kw)	2006.05-2014.12		Centre	SUV 4WD G32D		Center Bearing Support	538625
Rexton							
2.0 (114 kw)	2014.02-2015.11		Centre	SUV 4WD D20DTR		Center Bearing Support	538625
	2014.02-2015.11		Centre	SUV RWD D20DTR		Center Bearing Support	538625
2.2 (133 kw)	2017.07-		Centre	SUV RWD D22DTR(672980)		Center Bearing Support	538625
2.3 (110 kw)	2002.05-2006.08		Centre	SUV 4WD G23D		Center Bearing Support	538625
2.7 (121 kw)	2004.05-2006.08		Centre	SUV 4WD D27DT		Center Bearing Support	538625
	2005.03-2006.08		Centre	SUV RWD D27DT		Center Bearing Support	538625
	2014.02-2017.06		Centre	SUV 4WD D27DT		Center Bearing Support	538625
2.7 (137 kw)	2014.02-2017.06		Centre	SUV 4WD D27DTP		Center Bearing Support	538625
2.8 (142 kw)	2003.03-		Centre	SUV 4WD M162E28		Center Bearing Support	538625
2.9 (88 kw)	2002.04-2006.08		Centre	SUV 4WD 662925		Center Bearing Support	538625
3.2 (162 kw)	2002.04-2006.08		Front	SUV 4WD G32D		Propshaft	PS900459
	2002.04-2006.08		Centre	SUV 4WD G32D		Center Bearing Support	538625
Rexton II							
2.7 (118 kw)	2011.03-2013.04		Centre	SUV 4WD D27DT		Center Bearing Support	538625
2.7 (120 kw)	2006.09-2013.04		Centre	SUV 4WD D27DT		Center Bearing Support	538625
2.7 (121 kw)	2006.09-2012.05		Centre	SUV 4WD D27DT		Center Bearing Support	538625
2.7 (132 kw)	2008.02-2013.04	5AT	Front	SUV 4WD D27DTP		Propshaft	PS900459
	2008.02-2013.04		Centre	SUV 4WD D27DTP		Center Bearing Support	538625
2.7 (137 kw)	2006.06-2013.04		Centre	SUV 4WD D27DTP		Center Bearing Support	538625
3.2 (162 kw)	2006.09-2013.04		Front	SUV 4WD G32D		Propshaft	PS900459
	2006.09-2013.04		Centre	SUV 4WD G32D		Center Bearing Support	538625
Rexton W							
2.0 (114 kw)	2012.07-2015.11		Centre	SUV 4WD D20DTR		Center Bearing Support	538625
	2013.01-2015.11		Centre	SUV RWD D20DTR		Center Bearing Support	538625

	YEAR	TRANSM.	FITTING POSITION	BODY STYLE & DRIVE TYPE & ENGINE	REMARKS	PRODUCT	GSP Ref.
SSANGYONG							
Rexton W							
2.2 (131 kw)	2015.07-2017.06		Centre	SUV 4WD D22DTR(672980)		Center Bearing Support	538625
	2015.07-2017.06		Centre	SUV RWD D22DTR(672980)		Center Bearing Support	538625
2.7 (121 kw)	2012.07-2017.06		Centre	SUV 4WD D27DT		Center Bearing Support	538625
2.7 (137 kw)	2012.10-2017.06		Centre	SUV 4WD D27DTP		Center Bearing Support	538625
Rodius							
2.0 (114 kw)	2012.06-		Centre	MPV 4WD D20DTR		Center Bearing Support	538625
	2012.06-		Centre	MPV RWD D20DTR		Center Bearing Support	538625
	2012.06-		Front;Rear	MPV 4WD D20DTR		Flexible Coupling	533419
2.2 (131 kw)	2015.07-		Centre	MPV 4WD D22DTR(672980)		Center Bearing Support	538625
	2015.07-		Centre	MPV RWD D22DTR(672980)		Center Bearing Support	538625
	2015.07-		Front;Rear	MPV 4WD D22DTR(672980)		Flexible Coupling	533419
	2015.07-		Front;Rear	SUV Van 4WD D22DTR(672980)		Flexible Coupling	533419
Turismo							
2.0 (114 kw)	2013.08-		Centre	MPV 4WD D20DTR		Center Bearing Support	538625
	2013.08-		Centre	MPV RWD D20DTR		Center Bearing Support	538625
	2013.08-		Front;Rear	MPV 4WD D20DTR		Flexible Coupling	533419
2.2 (131 kw)	2015.08-		Centre	MPV RWD D22DTR(672980)		Center Bearing Support	538625
	2015.08-		Centre	MPV 4WD D22DTR(672980)		Center Bearing Support	538625
	2015.08-		Front;Rear	MPV 4WD D22DTR(672980)		Flexible Coupling	533419
SUBARU							
Forester							
2.0 (90 kw)	1997.08-2002.09		Centre	SUV 4WD EJ20J		Center Bearing Support	538979
2.0 (92 kw)	1998.09-2002.05		Centre	SUV 4WD EJ202		Center Bearing Support	538979
	2002.06-2005.05		Centre	SUV 4WD EJ201		Center Bearing Support	539008
2.0 (108 kw)	2008.09-2013.09		Centre	SUV 4WD EE20Z		Center Bearing Support Kit	539908S
	2013.03-		Centre	SUV 4WD EE20Z		Center Bearing Support Kit	539908S
2.0 (109 kw)	2012.11-		Centre	SUV 4WD FB20A		Center Bearing Support Kit	539908S
2.0 (110 kw)	2008.01-2013.09		Centre	SUV 4WD EJ204		Center Bearing Support Kit	539908S
	2009.01-2011.12		Centre	SUV 4WD EJ204		Center Bearing Support Kit	539908S
	2013.03-		Centre	SUV 4WD FB20B		Center Bearing Support Kit	539908S
2.0 (116 kw)	2005.06-2008.05		Centre	SUV 4WD EJ204		Center Bearing Support	539008
	2008.01-2013.09		Centre	SUV 4WD EJ204		Center Bearing Support Kit	539908S
2.0 (118 kw)	2010.10-2014.12		Centre	SUV 4WD EJ204		Center Bearing Support Kit	539908S
2.0 (125 kw)	1998.09-2001.04		Centre	SUV 4WD EJ205		Center Bearing Support	538979
2.0 (130 kw)	2000.10-2002.05		Centre	SUV 4WD EJ205		Center Bearing Support	538979
	2002.02-2005.05		Centre	SUV 4WD EJ205		Center Bearing Support	539008
2.0 (169 kw)	2007.12-2012.11		Centre	SUV 4WD EJ205		Center Bearing Support Kit	539908S
2.0 (186 kw)	2013.03-		Centre	SUV 4WD FA20F		Center Bearing Support Kit	539908S
2.5 (112 kw)	2002.06-2005.05	AT	Rear	SUV 4WD EJ251		Propshaft	PS901606
2.5 (121 kw)	2005.06-2008.05	AT	Rear	SUV 4WD EJ25D	Model year from:2006,Model year to:2008	Propshaft	PS901607
2.5 (123 kw)	2008.01-2010.12		Centre	SUV 4WD EJ253		Center Bearing Support Kit	539908S
2.5 (126 kw)	2008.06-2013.09	AT	Rear	SUV 4WD EJ253	Model year to:2012	Propshaft	PS900460
	2008.06-2013.09	AT	Rear	SUV 4WD EJ253	For Model year:2013	Propshaft	PS900462
	2011.03-2013.09	AT	Rear	SUV 4WD FB25	Model year to:2012	Propshaft	PS900460
	2011.03-2013.09	AT	Rear	SUV 4WD FB25	For Model year:2013	Propshaft	PS900462
	2014.07-	AT	Rear	SUV 4WD FB25B	Model year from:2014,Model year to:2018	Propshaft	PS900461
	2014.07-	AT	Rear	SUV 4WD FB25B	For Model year:2013	Propshaft	PS900462
2.5 (129 kw)	2005.01-2010.10	AT	Rear	SUV 4WD EJ253	Model year from:2008	Propshaft	PS900460
	2005.01-2010.10	AT	Rear	SUV 4WD EJ253	Model year from:2006,Model year to:2008	Propshaft	PS901607
	2005.01-2010.10		Centre	SUV 4WD EJ253		Center Bearing Support	539008
2.5 (155 kw)	2003.12-2005.05	AT	Rear	SUV 4WD EJ255		Propshaft	PS901606
2.5 (169 kw)	2005.06-2008.05	AT	Rear	SUV 4WD EJ255	Model year from:2006,Model year to:2008	Propshaft	PS901607
	2005.06-2008.05		Centre	SUV 4WD EJ255		Center Bearing Support	539008
	2005.06-2008.05		Centre	SUV 4WD EJ255		Center Bearing Support Kit	539908S
	2008.06-2013.09	AT	Rear	SUV 4WD EJ255	Model year to:2012	Propshaft	PS900460
	2008.06-2013.09	AT	Rear	SUV 4WD EJ255	For Model year:2013	Propshaft	PS900462
	2008.06-2013.09		Centre	SUV 4WD EJ255		Center Bearing Support Kit	539908S
2.5 (171 kw)	2003.09-2010.12	AT	Rear	SUV 4WD EJ255	Model year from:2008	Propshaft	PS900460
	2003.09-2010.12	AT	Rear	SUV 4WD EJ255	Model year to:2005	Propshaft	PS901606
	2003.09-2010.12	AT	Rear	SUV 4WD EJ255	Model year from:2006,Model year to:2008	Propshaft	PS901607
	2003.09-2010.12		Centre	SUV 4WD EJ255		Center Bearing Support	539008
2.5 (188 kw)	2005.05-2005.09		Centre	SUV 4WD EJ255		Center Bearing Support	539008

	YEAR	TRANSM.	FITTING POSITION	BODY STYLE & DRIVE TYPE & ENGINE	REMARKS	PRODUCT	GSP Ref.
SUBARU							
Impreza							
2.0 (110 kw)	2007.09-2012.03		Centre	Hatchback 4WD EJ204		Center Bearing Support Kit	539908S
	2007.09-2012.03		Centre	Saloon 4WD EJ204		Center Bearing Support Kit	539908S
	2009.01-2012.03		Centre	Hatchback 4WD EJ204		Center Bearing Support Kit	539908S
2.0 (118 kw)	2007.12-2012.03		Centre	Hatchback 4WD EJ204		Center Bearing Support Kit	539908S
2.5 (112 kw)	2002.12-2005.09	AT	Rear	Saloon 4WD EJ251		Propshaft	PS901608
Legacy							
2.0 (121 kw)	2005.06-2009.04		Centre	Saloon 4WD EJ204		Center Bearing Support	539007
2.2 (94 kw)	1994.01-1999.03	AT	Rear	Saloon 4WD EJ22E	For Model year:1996	Propshaft	PS901610
	1994.01-1999.03	MT	Rear	Saloon 4WD EJ22E	Model year from:1995	Propshaft	PS901609
2.2 (96 kw)	1994.01-1999.03	AT	Rear	Saloon 4WD EJ22E	For Model year:1996	Propshaft	PS901610
	1994.01-1999.03	MT	Rear	Saloon 4WD EJ22E		Propshaft	PS901609
2.5 (110 kw)	1996.01-1998.12	AT	Rear	Saloon 4WD EJ25D		Propshaft	PS901610
	1996.01-1998.12	MT	Rear	Saloon 4WD EJ25D		Propshaft	PS901609
2.5 (115 kw)	1998.10-2003.08	AT	Rear	Saloon 4WD EJ251	Model year to:1999	Propshaft	PS901610
	1998.10-2003.08	MT	Rear	Saloon 4WD EJ251	Model year from:2003	Propshaft	PS901605
	1998.10-2003.08	MT	Rear	Saloon 4WD EJ251	Model year to:1999	Propshaft	PS901609
2.5 (121 kw)	2003.09-2009.04	5AT	Rear	Saloon 4WD EJ253	Model year from:2005;for OEM:27111AG06A	Propshaft	PS901612
	2003.09-2009.04	AT	Rear	Saloon 4WD EJ253	Model year to:2004	Propshaft	PS901611
	2003.09-2009.04	MT	Rear	Saloon 4WD EJ253	Model year to:2004	Propshaft	PS901605
	2003.09-2009.04		Centre	Saloon 4WD EJ253		Center Bearing Support	539007
2.5 (123 kw)	2009.05-2014.12	AT	Rear	Saloon 4WD EJ253	Model year from:2013	Propshaft	PS901619
	2009.05-2014.12	CVT	Rear	Saloon 4WD EJ253	Model year to:2012	Propshaft	PS900464
	2009.05-2014.12	MT	Rear	Saloon 4WD EJ253		Propshaft	PS901616
2.5 (125 kw)	2009.05-2014.12	AT	Rear	Saloon 4WD EJ253	Model year from:2013	Propshaft	PS901619
	2009.05-2014.12	MT	Rear	Saloon 4WD EJ253		Propshaft	PS901616
2.5 (127 kw)	2007.09-2009.12	5AT	Rear	Saloon 4WD EJ252	for OEM:27111AG06A	Propshaft	PS901612
	2007.09-2009.12		Centre	Saloon 4WD EJ252		Center Bearing Support	539007
	2012.03-2014.12	AT	Rear	Saloon 4WD FB25B	Model year from:2013	Propshaft	PS901619
	2012.03-2014.12	MT	Rear	Saloon 4WD FB25B		Propshaft	PS901616
2.5 (195 kw)	2009.05-2014.12	AT	Rear	Saloon 4WD EJ255	Model year from:2013,Model year to:2014	Propshaft	PS901619
	2009.05-2014.12	MT	Rear	Saloon 4WD EJ255		Propshaft	PS901616
2.5 (210 kw)	2009.05-2014.12	AT	Rear	Saloon 4WD EJ255	Model year from:2013,Model year to:2014	Propshaft	PS901619
	2009.05-2014.12	MT	Rear	Saloon 4WD EJ255		Propshaft	PS901616
3.6 (191 kw)	2009.09-2014.12		Rear	Saloon 4WD EZ36D	Model year from:2010	Propshaft	PS901613
Legacy Estate/Wagon							
2.0 (121 kw)	2005.06-2009.04		Centre	Estate 4WD EJ204		Center Bearing Support	539007
2.2 (94 kw)	1994.01-1998.12	AT	Rear	Estate 4WD EJ22E	For Model year:1996	Propshaft	PS901610
	1994.01-1998.12	MT	Rear	Estate 4WD EJ22E	Model year from:1995	Propshaft	PS901609
2.2 (96 kw)	1993.09-1998.11	AT	Rear	Estate 4WD EJ22E	For Model year:1996	Propshaft	PS901610
	1993.09-1998.11	MT	Rear	Estate 4WD EJ22E		Propshaft	PS901609
2.5 (110 kw)	1996.01-1998.11	AT	Rear	Estate 4WD EJ25D		Propshaft	PS901610
	1996.01-1998.11	MT	Rear	Estate 4WD EJ25D		Propshaft	PS901609
2.5 (115 kw)	1998.10-2003.08	AT	Rear	Estate 4WD EJ251	Model year to:1999	Propshaft	PS901610
	1998.10-2003.08	MT	Rear	Estate 4WD EJ251	Model year from:2003	Propshaft	PS901605
	1998.10-2003.08	MT	Rear	Estate 4WD EJ251	Model year to:1999	Propshaft	PS901609
2.5 (121 kw)	2003.09-2009.04	5AT	Rear	Estate 4WD EJ253	Model year from:2005;for OEM:27111AG06A	Propshaft	PS901612
	2003.09-2009.04	AT	Rear	Estate 4WD EJ253	Model year to:2004	Propshaft	PS901611
	2003.09-2009.04	MT	Rear	Estate 4WD EJ253	Model year to:2004	Propshaft	PS901605
	2003.09-2009.04		Centre	Estate 4WD EJ253		Center Bearing Support	539007
2.5 (123 kw)	2009.05-2014.12	AT	Rear	Estate 4WD EJ253		Propshaft	PS901615
	2009.05-2014.12	MT	Rear	Estate 4WD EJ253		Propshaft	PS901614
2.5 (125 kw)	2009.05-2014.12	AT	Rear	Estate 4WD EJ253		Propshaft	PS901615
	2009.05-2014.12	MT	Rear	Estate 4WD EJ253		Propshaft	PS901614
2.5 (127 kw)	2008.01-2009.12	5AT	Rear	Estate 4WD EJ252	for OEM:27111AG06A	Propshaft	PS901612
	2008.01-2009.12		Centre	Estate 4WD EJ252		Center Bearing Support	539007
	2012.03-2014.12	AT	Rear	Estate 4WD FB25B		Propshaft	PS901615
	2012.03-2014.12	MT	Rear	Estate 4WD FB25B		Propshaft	PS901614
2.5 (195 kw)	2009.05-2014.12	AT	Rear	Estate 4WD EJ255		Propshaft	PS901615
	2009.05-2014.12	MT	Rear	Estate 4WD EJ255		Propshaft	PS901614
2.5 (210 kw)	2009.05-2014.12	AT	Rear	Estate 4WD EJ255		Propshaft	PS901615
	2009.05-2014.12	MT	Rear	Estate 4WD EJ255		Propshaft	PS901614
Legacy V							
2.5 (129 kw)	2013.09-	AT	Rear	Saloon 4WD FB25	Model year to:2014	Propshaft	PS901619
	2013.09-	MT	Rear	Saloon 4WD FB25	Model year to:2014	Propshaft	PS901616

	YEAR	TRANSM.	FITTING POSITION	BODY STYLE & DRIVE TYPE & ENGINE	REMARKS	PRODUCT	GSP Ref.
SUBARU							
Legacy V							
2.5 (171 kw)	2009.09-2013.12	AT	Rear	Saloon 4WD EJ255	Model year from:2013	Propshaft	PS901619
	2009.09-2013.12	MT	Rear	Saloon 4WD EJ255		Propshaft	PS901616
Outback							
2.5 (115 kw)	2000.01-2003.08	AT	Rear	Estate 4WD EJ251	Model year from:2001,Model year to:2002	Propshaft	PS901604
2.5 (123 kw)	2009.05-2014.12	AT	Rear	Estate 4WD EJ253	Model year to:2014	Propshaft	PS901619
	2009.05-2014.12	MT	Rear	Estate 4WD EJ253	Model year to:2014	Propshaft	PS901616
2.5 (125 kw)	2009.05-2014.12	AT	Rear	Estate 4WD EJ253	Model year to:2014	Propshaft	PS901619
	2009.05-2014.12	MT	Rear	Estate 4WD EJ253	Model year to:2014	Propshaft	PS901616
2.5 (127 kw)	2008.09-2009.09	4AT	Rear	Estate 4WD EJ252		Propshaft	PS900463
	2008.09-2009.09	5AT	Rear	Estate 4WD EJ252		Propshaft	PS901618
	2008.09-2009.09	MT	Rear	Estate 4WD EJ252		Propshaft	PS901617
	2012.03-2015.12	AT	Rear	Estate 4WD FB25A/FB25B	Model year to:2014	Propshaft	PS901619
	2012.03-2015.12	MT	Rear	Estate 4WD FB25A/FB25B	Model year to:2014	Propshaft	PS901616
	2014.10-	AT	Rear	Estate 4WD FB25A, FB25B	Model year to:2014	Propshaft	PS901619
	2014.10-	MT	Rear	Estate 4WD FB25A, FB25B	Model year to:2014	Propshaft	PS901616
2.5 (129 kw)	2013.01-2014.12	AT	Rear	Estate 4WD EJ253	Model year from:2013	Propshaft	PS901619
	2013.01-2014.12	MT	Rear	Estate 4WD EJ253		Propshaft	PS901616
2.5 (195 kw)	2008.09-2009.06	4AT	Rear	Estate 4WD EJ25DET		Propshaft	PS900463
	2008.09-2009.06	5AT	Rear	Estate 4WD EJ25DET		Propshaft	PS901618
	2008.09-2009.06	MT	Rear	Estate 4WD EJ25DET		Propshaft	PS901617
3.0 (180 kw)	2003.09-2009.09	4AT	Rear	Estate 4WD 30D/EZ30D/EZ30R	Model year from:2008	Propshaft	PS900463
XV							
1.6 (84 kw)	2012.03-		Centre	SUV 4WD FB16A/FB16B		Center Bearing Support Kit	539908S
	2012.03-		Centre	SUV 4WD FB16B		Center Bearing Support Kit	539908S
2.0 (80 kw)	2012.03-		Centre	SUV 4WD EE20Z		Center Bearing Support Kit	539908S
2.0 (108 kw)	2012.03-		Centre	SUV 4WD EE20Z		Center Bearing Support Kit	539908S
2.0 (110 kw)	2011.09-		Centre	SUV 4WD FB20A/FB20B		Center Bearing Support Kit	539908S
	2011.12-		Centre	SUV 4WD FB20B		Center Bearing Support Kit	539908S
SUZUKI							
Equator							
4.0 (195 kw)	2008.09-2011.12		Rear	Pickup 4WD VQ40DE		Joint,propshaft	801298
Grand Escudo							
1.6 (78 kw)	2005.04-2008.12		Front	Terrain cab wagon closed 4WD M16A		Joint,propshaft	835068
	2005.10-2007.12		Front	Terrain cab wagon closed RWD M16A		Joint,propshaft	835068
2.0 (103 kw)	2005.09-2011.12		Front	Terrain cab wagon closed 4WD J20A		Joint,propshaft	835068
	2005.10-2011.12		Front	Terrain cab wagon closed RWD J20A		Joint,propshaft	835068
Grand Vitara							
1.6 (73 kw)	2005.09-2015.02		Front	Terrain cab wagon closed 4WD M16A		Joint,propshaft	835068
1.6 (77 kw)	2005.04-		Front	Terrain cab wagon closed 4WD M16A		Joint,propshaft	835068
1.6 (78 kw)	2005.04-2015.02		Front	Terrain cab wagon closed 4WD M16A		Joint,propshaft	835068
	2005.10-2015.02		Front	Terrain cab wagon closed RWD M16A		Joint,propshaft	835068
1.9 (95 kw)	2005.10-2015.02	MT	Front	Terrain cab wagon closed 4WD F9QB/F9QC		Propshaft	PS901670
	2005.10-2015.02	MT	Front	Terrain cab wagon closed 4WD F9QB/F9QC		Joint,propshaft	605161
2.0 (99 kw)	2010.01-		Front	Closed Off-Road Vehicle RWD J20A		Joint,propshaft	835068
2.0 (103 kw)	2005.09-2015.02	MT	Front	Terrain cab wagon closed 4WD J20A		Propshaft	PS900608
	2005.09-2015.02		Front	Terrain cab wagon closed 4WD J20A		Joint,propshaft	835068
2.4 (122 kw)	2008.06-	AT/MT	Rear	Terrain cab wagon closed 4WD J24B	For Model year:2009	Propshaft	PS901704
	2008.06-		Front	Terrain cab wagon closed 4WD J24B		Joint,propshaft	835068
	2008.09-		Front	Closed Off-Road Vehicle RWD J24B		Joint,propshaft	835068
2.4 (124 kw)	2008.06-2015.02	AT/MT	Rear	Terrain cab wagon closed 4WD J24B	For Model year:2009	Propshaft	PS901704
	2008.06-2015.02		Front	Terrain cab wagon closed 4WD J24B		Joint,propshaft	835068
	2009.01-2015.02		Front	Terrain cab wagon closed RWD J24B		Joint,propshaft	835068
2.7 (136 kw)	2007.01-2008.12	AT	Front	Terrain cab wagon closed 4WD H27A	Model year from:2006,Model year to:2008	Propshaft	PS900608
	2007.01-2008.12	4AT/5MT	Rear	Terrain cab wagon closed 4WD H27A		Propshaft	PS901430
	2007.01-2008.12		Front	Terrain cab wagon closed 4WD H27A		Joint,propshaft	835068
2.7 (138 kw)	2005.09-	AT	Front	Terrain cab wagon closed 4WD H27A	Model year from:2006,Model year to:2008	Propshaft	PS900608
	2005.09-	4AT/5MT	Rear	Terrain cab wagon closed 4WD H27A		Propshaft	PS901430
	2005.09-		Front	Terrain cab wagon closed 4WD H27A		Joint,propshaft	835068
	2006.01-2008.12		Front	Terrain cab wagon closed RWD H27A		Joint,propshaft	835068
3.2 (165 kw)	2008.06-2015.02	AT	Front	Terrain cab wagon closed 4WD N32A	Model year to:2010;for OE No.:27101-67J01	Propshaft	PS901461
	2008.06-2015.02	AT	Front	Terrain cab wagon closed 4WD N32A	Model year to:2010	Joint,propshaft	605202
3.2 (171 kw)	2008.06-2015.02	AT	Front	Terrain cab wagon closed 4WD N32A	Model year to:2010;for OE No.:27101-67J01	Propshaft	PS901461
	2008.06-2015.02	AT	Front	Terrain cab wagon closed 4WD N32A	Model year to:2010	Joint,propshaft	605202

	YEAR	TRANSM.	FITTING POSITION	BODY STYLE & DRIVE TYPE & ENGINE	REMARKS	PRODUCT	GSP Ref.
SUZUKI							
Grand Vitara II							
2.0 (101 kw)	2005.10-		Front	Closed Off-Road Vehicle RWD J20A		Joint,propshaft	835068
2.7 (126 kw)	2006.10-2007.11		Front	Closed Off-Road Vehicle 4WD H 27 A		Joint,propshaft	835068
Grand Vitara II/Grand Escudo							
2.0 (95 kw)	2007.07-2010.02		Front	Closed Off-Road Vehicle 4WD J20A		Joint,propshaft	835068
SX4							
1.4 (103 kw)	2016.08-	AT/MT	Rear	Hatchback 4WD K14C		Propshaft	PS900465
1.5 (81 kw)	2008.01-2009.06	AT	Rear	Hatchback 4WD M15A		Propshaft	PS901429
1.5 (82 kw)	2009.07-2015.12	AT	Rear	Hatchback 4WD M15A	Model year to:2012	Propshaft	PS901429
2.0 (107 kw)	2007.01-2015.12	AT	Rear	Hatchback 4WD J20A	Model year to:2012	Propshaft	PS901429
SX4 S-Cross							
1.0 (82 kw)	2016.08-	AT/MT	Rear	Hatchback 4WD K10CT		Propshaft	PS900465
1.4 (103 kw)	2016.08-	AT/MT	Rear	Hatchback 4WD K14C		Propshaft	PS900465
1.6 (88 kw)	2013.08-	AT/MT	Rear	Hatchback 4WD M16A		Propshaft	PS900465
	2013.08-	AT/MT	Rear	Hatchback 4WD D16AA		Propshaft	PS900465
Vitara							
1.0 (82 kw)	2018.10-	5MT	Rear	SUV 4WD K10CT		Propshaft	PS901971
1.4 (103 kw)	2015.09-	6AT/6MT	Rear	SUV 4WD K14C		Propshaft	PS901971
1.6 (59 kw)	1988.07-2000.12	MT	Front	Terrain cab wagon closed 4WD G16A	Model:Vitara	Propshaft	PS901703
	1988.07-2000.12	MT	Rear	Terrain cab wagon closed 4WD G16A	Model:Vitara	Propshaft	PS901949
1.6 (60 kw)	1988.07-1991.12	MT	Front	Terrain cab wagon closed 4WD G16A	Model:Vitara	Propshaft	PS901703
	1988.07-1991.12	MT	Rear	Terrain cab wagon closed 4WD G16A	Model:Vitara	Propshaft	PS901949
1.6 (71 kw)	1990.07-1998.12	MT	Front	Terrain cab wagon closed 4WD G16B	Model:Vitara	Propshaft	PS901703
	1990.07-1998.12	MT	Rear	Terrain cab wagon closed 4WD G16B	Model:Vitara	Propshaft	PS901949
1.6 (88 kw)	2015.02-	6AT/5MT	Rear	SUV 4WD M16A		Propshaft	PS901971
	2015.02-	6MT	Rear	SUV 4WD D16AA		Propshaft	PS901971
1.9 (50 kw)	1995.01-1998.03	MT	Front	Terrain cab wagon closed 4WD XUD9	Model:Vitara	Propshaft	PS901703
	1995.01-1998.03	MT	Rear	Terrain cab wagon closed 4WD XUD9	Model:Vitara	Propshaft	PS901949
1.9 (55 kw)	1996.08-1998.12	MT	Front	Terrain cab wagon closed 4WD XUD9SD	Model:Vitara	Propshaft	PS901703
	1996.08-1998.12	MT	Rear	Terrain cab wagon closed 4WD XUD9SD	Model:Vitara	Propshaft	PS901949
2.0 (52 kw)	1995.04-1998.12	MT	Front	Terrain cab wagon closed 4WD RFS	Model:Vitara	Propshaft	PS901703
	1995.04-1998.12	MT	Rear	Terrain cab wagon closed 4WD RFS	Model:Vitara	Propshaft	PS901949
2.0 (64 kw)	1995.12-1998.03	MT	Front	Terrain cab wagon closed 4WD RFM	Model:Vitara	Propshaft	PS901703
	1995.12-1998.03	MT	Rear	Terrain cab wagon closed 4WD RFM	Model:Vitara	Propshaft	PS901949
2.0 (97 kw)	1996.12-2000.04	MT	Front	Terrain cab wagon closed 4WD J20A	Model:Vitara	Propshaft	PS901703
	1996.12-2000.04	MT	Rear	Terrain cab wagon closed 4WD J20A	Model:Vitara	Propshaft	PS901949
2.0 (100 kw)	1994.11-1998.12	MT	Front	Terrain cab wagon closed 4WD H20A	Model:Vitara	Propshaft	PS901703
	1994.11-1998.12	MT	Rear	Terrain cab wagon closed 4WD H20A	Model:Vitara	Propshaft	PS901949
TOYOTA							
4 Runner							
2.7 (112 kw)	1995.11-2002.07	4AT	Rear	SUV RWD 3RZFE	Date to:1998.06	Propshaft	PS901751
2.7 (117 kw)	2009.09-2010.12	4AT	Front	SUV 4WD 2TR-FE	Date from:2010.08,Date to:2011.07	Propshaft	PS900466
3.0 (92 kw)	1995.11-2000.08		Centre	SUV 4WD 1KZT		Center Bearing Support	539022
	1995.11-2000.08		Centre	SUV 4WD 1KZT		Center Bearing Support	539024
3.0 (105 kw)	1990.01-1995.10		Centre	SUV 4WD 3VZE		Center Bearing Support	539022
	1990.01-1995.10		Centre	SUV 4WD 3VZE		Center Bearing Support	539024
4.0 (174 kw)	2005.09-2009.09	5AT	Front	SUV 4WD 1GRFE	With limited	Propshaft	PS900466
	2005.09-2009.09	5AT	Front	SUV 4WD 1GRFE	Without limited	Propshaft	PS901622
	2005.09-2009.09	4AT	Rear	SUV 4WD 1GRFE		Propshaft	PS900469
	2005.09-2009.09	5AT	Rear	SUV 4WD 1GRFE	Date to:2009.07	Propshaft	PS900467
4.0 (183 kw)	2003.01-2005.01	4AT	Rear	SUV 4WD 1GRFE	for OE No.:37110-6A440	Propshaft	PS900467
	2003.01-2005.01	4AT	Rear	SUV 4WD 1GRFE	for OE No.:37110-6A520	Propshaft	PS900469
4.0 (198 kw)	2009.08-	5AT	Front	SUV 4WD 1GR-FE	Date to:2013.07;for OE No.:37140-60380	Propshaft	PS900466
	2009.08-	AT	Front	SUV 4WD 1GR-FE	Date to:2013.07;for OE No.:37140-60470	Propshaft	PS901622
4.0 (199 kw)	2013.08-	AT	Front	SUV 4WD 1GR-FE	Model year to:2021	Propshaft	PS901622
4.0 (201 kw)	2010.01-	AT	Front	SUV 4WD 1GR-FE	Model year to:2021	Propshaft	PS901622
4.0 (202 kw)	2010.01-	AT	Front	SUV 4WD 1GR-FE	Model year to:2021	Propshaft	PS901622
4 Runner (Nato)							
2.7 (112 kw)	1995.11-2002.08	5MT	Rear	SUV 4WD 3RZFE	Model year from:1998	Propshaft	PS901621
3.4 (136 kw)	1995.11-2002.08	4AT	Rear	SUV 4WD 5VZFE		Propshaft	PS901621
4 Runner II/Surf/Hilux Surf							
3.0 (92 kw)	1993.10-1996.03		Centre	SUV 4WD 1KZ-T		Center Bearing Support	539022
	1993.10-1996.03		Centre	SUV 4WD 1KZ-T		Center Bearing Support	539024

	YEAR	TRANSM.	FITTING POSITION	BODY STYLE & DRIVE TYPE & ENGINE	REMARKS	PRODUCT	GSP Ref.
TOYOTA							
4 Runner/Surf/Hilux Surf							
2.4 (84 kw)	1989.09-1995.12	5MT	Front	SUV 4WD 22RE		Propshaft	PS900478
	1989.09-1995.12	5MT	Rear	SUV 4WD 22RE	Date to:1992.07	Propshaft	PS901702
2.8 (61 kw)	1989.08-1995.10		Centre	SUV 4WD 3L		Center Bearing Support	539022
Allex							
1.8 (100 kw)	2001.01-2006.09		Centre	Hatchback 4WD 1ZZFE		Center Bearing Support	539014
Allion							
1.8 (96 kw)	2013.03-		Front	Saloon 4WD 2ZR-FAE		Center Bearing Support	539028
1.8 (97 kw)	2001.06-2007.06		Front	Saloon 4WD 1ZZ-FE		Center Bearing Support	539028
Alphard							
2.4 (117 kw)	2003.09-2008.04		Rear	MPV 4WD 2AZFE		Center Bearing Support	539018
3.0 (162 kw)	2003.04-2008.04		Rear	MPV 4WD 1MZFE		Center Bearing Support	539018
Altezza							
2.0 (118 kw)	1999.01-2005.05		Centre	Saloon RWD 1GFE		Center Bearing Support	539071
2.0 (147 kw)	1999.02-2005.11		Centre	Saloon RWD 3SGE		Center Bearing Support	539071
2.0 (154 kw)	1999.02-2005.11		Centre	Saloon RWD 3SGE		Center Bearing Support	539071
Altezza Gita							
2.0 (114 kw)	1999.01-2001.06		Centre	Estate RWD 1GFE		Center Bearing Support	539071
3.0 (157 kw)	2001.07-2005.11		Centre	Estate RWD 2JZGE		Center Bearing Support	539071
Aristo							
3.0 (169 kw)	1990.10-1997.07		Rear	Saloon RWD 2JZGE	Date from:1991.10	Flexible Coupling	517649
3.0 (170 kw)	1997.08-2004.09		Centre	Saloon RWD 2JZGE		Center Bearing Support	539020
	1997.08-2004.09		Rear	Saloon RWD 2JZGE	AT	Flexible Coupling	517649
3.0 (205 kw)	1990.10-1997.07		Rear	Saloon RWD 2JZGTE	Date from:1991.10	Flexible Coupling	517649
3.0 (206 kw)	1997.08-2004.09		Centre	Saloon RWD 2JZGTE		Center Bearing Support	539020
	1997.08-2004.09		Rear	Saloon RWD 2JZGTE	AT	Flexible Coupling	517649
4.0 (173 kw)	1992.10-1997.07		Rear	Saloon 4WD 1UZFE		Flexible Coupling	517649
Auris							
1.5 (77 kw)	2006.10-2012.09		Centre	Hatchback 4WD 1NZFE		Center Bearing Support	539940
1.8 (100 kw)	2006.10-2009.10		Centre	Hatchback 4WD 2ZRFE		Center Bearing Support	539940
Auris/Corolla/Blade							
2.4 (123 kw)	2006.11-2012.04		Centre	Hatchback 4WD 2AZ-FE		Center Bearing Support	539940
Avanza							
1.3 (63 kw)	2003.12-2011.10		Centre	MPV RWD K3-DE, K3-VE		Center Bearing Support	539030
1.3 (67 kw)	2006.08-2011.12		Centre	MPV RWD K3-VE		Center Bearing Support	539030
Caldina							
2.0 (110 kw)	2002.09-2007.06		Rear	Estate 4WD 1AZFSE	AT	Center Bearing Support Kit	539064S
2.0 (114 kw)	2002.09-2007.06		Rear	Estate 4WD 1AZFSE	AT	Center Bearing Support Kit	539064S
2.0 (191 kw)	2002.09-2007.06		Rear	Estate 4WD 3SGTE	AT	Center Bearing Support Kit	539064S
2.2 (69 kw)	1997.08-2002.09		Centre	Estate 4WD 3CTE		Center Bearing Support	538637
Celsior							
4.0 (195 kw)	1994.10-1997.07		Rear	Saloon RWD 1UZ-FE	Date from:1997.07	Flexible Coupling	517649
4.0 (206 kw)	1997.07-2000.08		Rear	Saloon RWD 1UZFE		Flexible Coupling	517649
4.3 (208 kw)	2000.08-2006.08		Centre	Saloon RWD 3UZFE		Center Bearing Support	539020
	2000.08-2006.08		Rear	Saloon RWD 3UZFE		Flexible Coupling	517649
Chaser							
2.5 (206 kw)	1992.10-1996.08		Centre	Saloon RWD 1JZ-GTE		Center Bearing Support	539015
Corolla							
1.6 (85 kw)	1995.06-2000.07		Rear	Saloon 4WD 4A-FE		Center Bearing Support	539013
1.8 (92 kw)	2000.08-2006.10		Centre	Saloon 4WD 1ZZ-FE		Center Bearing Support	539014
1.8 (100 kw)	2001.12-2007.02		Centre	Hatchback 4WD 1ZZFE		Center Bearing Support	539014
Corolla Altis							
1.5 (80 kw)	2001.11-2004.05		Centre	Saloon 4WD 1NZ-FE		Center Bearing Support	539014
Corolla Axio							
1.5 (77 kw)	2007.08-2012.05		Front	Saloon 4WD 1NZ-FE		Center Bearing Support	539028
1.8 (98 kw)	2007.08-2012.05		Front	Saloon 4WD 2ZR-FAE, 2ZR-FE		Center Bearing Support	539028
Corolla Estate/Wagon							
1.8 (81 kw)	1995.09-1997.04		Rear	Estate 4WD 7AFE		Center Bearing Support	539013
	1997.04-2001.10		Rear	Estate 4WD 7AFE		Center Bearing Support	539013
Corolla Fielder							
1.5 (77 kw)	2006.09-2012.04		Front	Estate 4WD 1NZ-FE		Center Bearing Support	539028
1.5 (81 kw)	2006.09-2012.04		Front	Estate FWD 1NZ-FE		Center Bearing Support	539028
1.8 (98 kw)	2006.09-2012.04		Front	Estate 4WD 2ZR-FAE		Center Bearing Support	539028
1.8 (100 kw)	2006.09-2012.04		Front	Estate FWD 2ZR-FE		Center Bearing Support	539028

	YEAR	TRANSM.	FITTING POSITION	BODY STYLE & DRIVE TYPE & ENGINE	REMARKS	PRODUCT	GSP Ref.
TOYOTA							
Corolla RunX							
1.8 (100 kw)	2001.01-2006.09		Centre	Hatchback 4WD 1ZZFE		Center Bearing Support	539014
Corolla Spacio							
1.5 (80 kw)	2001.07-2004.02		Centre	MPV FWD 1NZ-FE		Center Bearing Support	539014
1.8 (97 kw)	2004.03-2009.03		Centre	MPV FWD 1ZZ-FE		Center Bearing Support	539014
1.8 (99 kw)	2001.10-2007.05		Centre	MPV 4WD 1ZZ-FE		Center Bearing Support	539014
Corona							
2.0 (54 kw)	1992.08-1996.01		Centre	Saloon 4WD 2C		Center Bearing Support	538637
Crown							
2.5 (132 kw)	1995.12-2001.08		Centre	Saloon RWD 1JZGE		Center Bearing Support	539019
Crown Majesta							
3.0 (162 kw)	1991.10-1995.08		Rear	Saloon RWD 2JZGE		Flexible Coupling	517649
3.0 (169 kw)	1991.08-1995.12		Rear	Saloon RWD 2JZ-GE		Flexible Coupling	517649
4.0 (191 kw)	1993.08-1995.08		Rear	Saloon RWD 1UZ-FE		Flexible Coupling	517649
4.0 (195 kw)	1992.10-1995.08		Rear	Saloon 4WD 1UZ-FE		Flexible Coupling	517649
4.0 (206 kw)	1999.09-2003.08		Centre	Saloon RWD 1UZ-FE		Center Bearing Support	539020
	1999.09-2003.08		Rear	Saloon RWD 1UZ-FE	AT	Flexible Coupling	517649
	1999.09-2004.05		Centre	Saloon 4WD 1UZ-FE		Center Bearing Support	539020
	1999.09-2004.05		Rear	Saloon 4WD 1UZ-FE	AT	Flexible Coupling	517649
4.3 (206 kw)	2004.06-2008.11		Rear	Saloon RWD 3UZ-FE	Date to:2006.06,AT	Flexible Coupling	517649
Dyna 150							
3.4 (66 kw)	1988.09-1995.06		Centre	Platform/Chassis RWD 3B		Center Bearing Support	539026
Dyna 200							
3.0 (75 kw)	1985.01-1995.05		Centre	Platform/Chassis RWD 11B	without bracket	Center Bearing Support	539026
	1985.01-1995.05		Centre	Platform/Chassis RWD 11B	with bracket	Center Bearing Support	539027
3.4 (66 kw)	1995.06-1999.05		Centre	Platform/Chassis RWD 3B		Center Bearing Support	539026
3.7 (71 kw)	1988.08-1995.05		Centre	Platform/Chassis RWD 14B		Center Bearing Support	539027
	1995.06-2002.12		Centre	Platform/Chassis RWD 14B		Center Bearing Support	539027
4.1 (125 kw)	1999.06-2001.07		Centre	Platform/Chassis RWD 15B-FTE		Center Bearing Support	539026
Dyna 300							
3.4 (66 kw)	1995.06-1999.05		Centre	Platform/Chassis RWD 3B		Center Bearing Support	539026
Estima							
2.4 (99 kw)	1990.05-1999.12		Centre	MPV 4WD 2TZ-FE		Center Bearing Support	539017
	1990.05-1999.12		Front;Rear	MPV 4WD 2TZ-FE		Flexible Coupling	511086
	1990.05-1999.12		Front;Rear	MPV 4WD 2TZ-FE		Flexible Coupling Kit	511086S
2.4 (110 kw)	1990.05-1999.12		Centre	MPV 4WD 2TZ-FZE		Center Bearing Support	539017
	1990.05-1999.12		Front;Rear	MPV 4WD 2TZ-FZE		Flexible Coupling Kit	511086S
2.4 (118 kw)	1993.09-1999.12		Front;Rear	MPV RWD 2TZFZE		Flexible Coupling	511086
	2000.02-2006.01		Rear	MPV 4WD 2AZ-FE		Center Bearing Support	539018
3.0 (162 kw)	2000.02-2005.12		Rear	MPV 4WD 1MZFE		Center Bearing Support	539018
Estima Emina							
2.2 (74 kw)	1992.01-1999.08		Rear	MPV 4WD 3CT/3CTE		Flexible Coupling Kit	513053S
2.4 (99 kw)	1992.01-1999.12		Centre	MPV 4WD 2TZFE		Center Bearing Support	539017
	1992.01-1999.12		Front;Rear	MPV 4WD 2TZFE		Flexible Coupling Kit	511086S
Estima Lucida							
2.2 (74 kw)	1992.01-1999.08		Centre	MPV 4WD 3CT/3CTE		Center Bearing Support	539017
2.2 (77 kw)	1992.01-1999.08		Centre	MPV 4WD 3C-TE		Center Bearing Support	539017
	1992.01-1999.08		Rear	MPV RWD 3C-TE		Flexible Coupling Kit	513053S
	1992.01-1999.08		Rear	MPV 4WD 3C-TE		Flexible Coupling Kit	513053S
2.4 (99 kw)	1992.01-1999.12		Front;Rear	MPV RWD 2TZFE		Flexible Coupling	511086
	1992.01-1999.12		Front;Rear	MPV RWD 2TZFE		Flexible Coupling Kit	511086S
FJ Cruiser							
4.0 (176 kw)	2005.06-2009.12	5AT/MT	Front	SUV 4WD 1GRFE	Model year from:2007	Propshaft	PS901622
4.0 (178 kw)	2006.01-2018.01	5AT/MT	Front	SUV 4WD 1GRFE	Model year from:2007	Propshaft	PS901622
4.0 (191 kw)	2010.01-2014.06	5AT/MT	Front	SUV 4WD 1GRFE		Propshaft	PS901622
4.0 (194 kw)	2007.01-2014.06	5AT/MT	Front	SUV 4WD 1GR-FE		Propshaft	PS901622
4.0 (200 kw)	2010.12-2018.01	5AT/MT	Front	SUV 4WD 1GRFE		Propshaft	PS901622
4.0 (203 kw)	2005.06-2018.01	5AT/MT	Front	SUV 4WD 1GRFE	Model year from:2007	Propshaft	PS901622
Fortuner							
2.4 (108 kw)	2015.05-	6MT	Front	SUV RWD 2GD-FTV	Model year from:2017,Model year to:2019	Propshaft	PS901462
	2016.01-	6MT	Front	SUV 4WD 2GDFTV	Model year from:2017,Model year to:2019	Propshaft	PS901462
	2016.01-		Centre	SUV 4WD 2GDFTV	Bearing Center Height:15.5mm,For GGN1**,GUN1**,KUN1**,LAN125,TGN1**	Center Bearing Support	538633
	2016.01-		Centre	SUV 4WD 2GDFTV	Bearing Center Height:8.5mm,For GUN12*,135	Center Bearing Support	538634
2.4 (110 kw)	2015.05-	6MT	Front	SUV RWD 2GD-FTV	Model year from:2017,Model year to:2019	Propshaft	PS901462
	2015.05-	6MT	Front	SUV 4WD 2GD-FTV	Model year from:2017,Model year to:2019	Propshaft	PS901462

	YEAR	TRANSM.	FITTING POSITION	BODY STYLE & DRIVE TYPE & ENGINE	REMARKS	PRODUCT	GSP Ref.
TOYOTA							
Fortuner							
2.4 (110 kw)	2015.05-		Centre	SUV RWD 2GD-FTV	Bearing Center Height:15.5mm,For GGN1*,GUN1*,KUN1*,LAN125,TGN1*	Center Bearing Support	538633
	2015.05-		Centre	SUV 4WD 2GD-FTV	Bearing Center Height:15.5mm,For GGN1*,GUN1*,KUN1*,LAN125,TGN1*	Center Bearing Support	538633
	2015.05-		Centre	SUV RWD 2GD-FTV	Bearing Center Height:8.5mm,For GUN12*,135	Center Bearing Support	538634
	2015.05-		Centre	SUV 4WD 2GD-FTV	Bearing Center Height:8.5mm,For GUN12*,135	Center Bearing Support	538634
2.5 (75 kw)	2005.01-2015.05		Centre	SUV 4WD 2KDFTV	Bearing Center Height:15.5mm,For GGN1*,GUN1*,KUN1*,LAN125,TGN1*	Center Bearing Support	538633
	2005.01-2015.05		Centre	SUV 4WD 2KDFTV	Bearing Center Height:8.5mm,For GUN12*,135	Center Bearing Support	538634
	2008.01-2011.12		Centre	SUV RWD 2KDFTV	Bearing Center Height:15.5mm,For GGN1*,GUN1*,KUN1*,LAN125,TGN1*	Center Bearing Support	538633
	2008.01-2011.12		Centre	SUV RWD 2KDFTV	Bearing Center Height:8.5mm,For GUN12*,135	Center Bearing Support	538634
2.5 (106 kw)	2011.07-2015.05		Centre	SUV 4WD 2KDFTV	Bearing Center Height:15.5mm,For GGN1*,GUN1*,KUN1*,LAN125,TGN1*	Center Bearing Support	538633
	2011.07-2015.05		Centre	SUV 4WD 2KDFTV	Bearing Center Height:8.5mm,For GUN12*,135	Center Bearing Support	538634
2.7 (116 kw)	2008.08-2015.03	4AT	Front	SUV 4WD 2TR-FE	Model year from:2012	Propshaft	PS901462
	2008.08-2015.03		Centre	SUV 4WD 2TR-FE	Bearing Center Height:15.5mm,For GGN1*,GUN1*,KUN1*,LAN125,TGN1*	Center Bearing Support	538633
	2008.08-2015.03		Centre	SUV 4WD 2TR-FE	Bearing Center Height:8.5mm,For GUN12*,135	Center Bearing Support	538634
	2009.03-2015.05	4AT	Front	SUV RWD 2TR-FE	Model year from:2012	Propshaft	PS901462
	2009.03-2015.05		Centre	SUV RWD 2TR-FE	Bearing Center Height:15.5mm,For GGN1*,GUN1*,KUN1*,LAN125,TGN1*	Center Bearing Support	538633
	2009.03-2015.05		Centre	SUV RWD 2TR-FE	Bearing Center Height:8.5mm,For GUN12*,135	Center Bearing Support	538634
	2009.03-2015.05		Centre	SUV RWD 2TR-FE	Bracket Fix Hole:30.5mm	Center Bearing Support	538638
2.7 (118 kw)	2004.06-2015.05	4AT	Front	SUV RWD 2TRFE	Model year from:2012	Propshaft	PS901462
	2004.06-2015.05	4AT	Front	SUV 4WD 2TRFE	Model year from:2012	Propshaft	PS901462
	2004.06-2015.05		Centre	SUV RWD 2TRFE	Bearing Center Height:15.5mm,For GGN1*,GUN1*,KUN1*,LAN125,TGN1*	Center Bearing Support	538633
	2004.06-2015.05		Centre	SUV 4WD 2TRFE	Bearing Center Height:15.5mm,For GGN1*,GUN1*,KUN1*,LAN125,TGN1*	Center Bearing Support	538633
	2004.06-2015.05		Centre	SUV RWD 2TRFE	Bearing Center Height:8.5mm,For GUN12*,135	Center Bearing Support	538634
	2004.06-2015.05		Centre	SUV 4WD 2TRFE	Bearing Center Height:8.5mm,For GUN12*,135	Center Bearing Support	538634
	2004.06-2015.05		Centre	SUV RWD 2TRFE	Date from:2005.04	Center Bearing Support	538638
2.7 (120 kw)	2015.05-		Centre	SUV 4WD 2TR-FE	Bearing Center Height:15.5mm,For GGN1*,GUN1*,KUN1*,LAN125,TGN1*	Center Bearing Support	538633
	2015.05-		Centre	SUV 4WD 2TR-FE	Bearing Center Height:8.5mm,For GUN12*,135	Center Bearing Support	538634
	2016.01-		Centre	SUV RWD 2TR-FE	Bearing Center Height:15.5mm,For GGN1*,GUN1*,KUN1*,LAN125,TGN1*	Center Bearing Support	538633
	2016.01-		Centre	SUV RWD 2TR-FE	Bearing Center Height:8.5mm,For GUN12*,135	Center Bearing Support	538634
2.7 (121 kw)	2015.05-		Centre	SUV 4WD 2TR-FE	Bearing Center Height:15.5mm,For GGN1*,GUN1*,KUN1*,LAN125,TGN1*	Center Bearing Support	538633
	2015.05-		Centre	SUV 4WD 2TR-FE	Bearing Center Height:8.5mm,For GUN12*,135	Center Bearing Support	538634
2.7 (122 kw)	2015.05-		Centre	SUV 4WD 2TRFE	Bearing Center Height:15.5mm,For GGN1*,GUN1*,KUN1*,LAN125,TGN1*	Center Bearing Support	538633
	2015.05-		Centre	SUV RWD 2TR-FE	Bearing Center Height:15.5mm,For GGN1*,GUN1*,KUN1*,LAN125,TGN1*	Center Bearing Support	538633
	2015.05-		Centre	SUV 4WD 2TRFE	Bearing Center Height:8.5mm,For GUN12*,135	Center Bearing Support	538634
	2015.05-		Centre	SUV RWD 2TR-FE	Bearing Center Height:8.5mm,For GUN12*,135	Center Bearing Support	538634
2.8 (130 kw)	2015.05-	6AT	Front	SUV 4WD 1GDFTV	Date from:2021.08	Propshaft	PS900472
	2015.05-	6MT	Front	SUV 4WD 1GDFTV		Propshaft	PS901462
	2015.05-	6MT	Front	SUV RWD 1GD-FTV		Propshaft	PS901462
	2015.05-		Centre	SUV 4WD 1GDFTV		Center Bearing Support	538633
	2015.05-		Centre	SUV 4WD 1GDFTV		Center Bearing Support	538634
3.0 (120 kw)	2004.06-2015.05	5MT	Front	SUV 4WD 1KDFTV	Model year from:2006	Propshaft	PS901462
3.0 (125 kw)	2009.08-2015.05	5MT	Front	SUV 4WD 1KDFTV	Model year from:2006	Propshaft	PS901462
3.0 (126 kw)	2009.08-2015.05	5MT	Front	SUV 4WD 1KDFTV	Model year from:2006	Propshaft	PS901462
	2011.01-2015.05	5MT	Front	SUV RWD 1KDFTV	Model year from:2006	Propshaft	PS901462
4.0 (175 kw)	2005.08-2015.05	5AT	Front	SUV RWD 1GRFE	Model year from:2008	Propshaft	PS901462
	2005.08-2015.05		Centre	SUV RWD 1GRFE		Center Bearing Support	539012
FunCargo							
1.5 (78 kw)	2000.03-2005.09		Front	MPV 4WD 1NZFE		Center Bearing Support	539067
Harrier							
2.4 (118 kw)	2003.10-2013.12	4AT	Rear	SUV 4WD 2AZFE	Date from:2006.01	Propshaft	PS900503
3.0 (164 kw)	1997.05-2003.02		Rear	SUV 4WD 1MZFE		Center Bearing Support	539018
	2003.08-2006.01	5AT	Rear	SUV 4WD 1MZFE	Date to:2005.12	Propshaft	PS900503
3.5 (206 kw)	2005.04-2008.12	CVT	Rear	SUV 4WD 2GRFE	Date from:2006.01,Date to:2008.11	Propshaft	PS900503
Hiace							
2.4 (55 kw)	1989.08-1995.08		Centre	Bus RWD 2L		Center Bearing Support	539016
	1989.08-1999.07		Centre	Van 4WD 2L		Center Bearing Support	538620
	1995.08-2001.08		Centre	Bus RWD 2L		Center Bearing Support	538620
	1995.08-2001.08		Centre	Van RWD 2L		Center Bearing Support	538620
2.4 (58 kw)	1995.08-2001.08		Centre	Bus RWD 2L		Center Bearing Support	538620
	1995.08-2001.08		Centre	Van RWD 2L		Center Bearing Support	538620
2.4 (66 kw)	1995.08-2001.08		Centre	Bus RWD 2L-T (08.95-.)		Center Bearing Support	538620
	1995.08-2001.08		Centre	Van RWD 2L-T (08.95-.)		Center Bearing Support	538620
	1995.08-2001.08		Centre	Bus 4WD 2L-T (08.95-.)		Center Bearing Support	538620
	1995.08-2001.08		Centre	Van 4WD 2L-T (08.95-.)		Center Bearing Support	538620

	YEAR	TRANSM.	FITTING POSITION	BODY STYLE & DRIVE TYPE & ENGINE	REMARKS	PRODUCT	GSP Ref.
TOYOTA							
Hiace							
2.4 (85 kw)	1995.08-1998.04		Centre	Bus 4WD 2RZ-E		Center Bearing Support	538620
	1995.08-1998.04		Centre	Bus RWD 2RZ-E		Center Bearing Support	538620
	1995.08-1998.04		Centre	Van 4WD 2RZ-E		Center Bearing Support	538620
	1995.08-2003.11		Centre	Van RWD 2RZ-E		Center Bearing Support	538620
2.4 (88 kw)	1995.08-2004.08		Centre	Van RWD 2RZ-E		Center Bearing Support	538620
2.5 (65 kw)	2001.08-2004.08		Centre	Van 4WD 2KD-FTV		Center Bearing Support	538620
	2001.08-2006.08		Centre	Bus RWD 2KD-FTV		Center Bearing Support	538620
	2001.08-2006.08		Centre	Van RWD 2KD-FTV		Center Bearing Support	538620
2.5 (70 kw)	2006.09-2012.12		Centre	Bus RWD 2KD-FTV		Center Bearing Support	538620
	2006.09-2012.12		Centre	Van RWD 2KD-FTV		Center Bearing Support	538620
2.5 (75 kw)	2001.08-2006.08		Centre	Bus RWD 2KD-FTV		Center Bearing Support	538620
	2001.08-2006.08		Centre	Van 4WD 2KD-FTV		Center Bearing Support	538620
	2001.08-2006.08		Centre	Van RWD 2KD-FTV		Center Bearing Support	538620
	2001.11-2006.08		Centre	Bus 4WD 2KD-FTV		Center Bearing Support	538620
	2005.01-	5MT	Rear	Van RWD 2KDFTV		Propshaft	PS900635
2.5 (80 kw)	2006.09-	5MT	Rear	Van RWD 2KD-FTV		Propshaft	PS900635
2.5 (86 kw)	2006.08-2012.12		Centre	Bus RWD 2KD-FTV		Center Bearing Support	538620
	2006.09-2012.12		Centre	Van 4WD 2KD-FTV		Center Bearing Support	538620
	2006.09-2012.12		Centre	Van RWD 2KD-FTV		Center Bearing Support	538620
	2006.09-2012.12		Centre	Bus 4WD 2KD-FTV		Center Bearing Support	538620
	2006.09-2019.05	5MT	Rear	Van RWD 2KDFTV		Propshaft	PS900635
2.7 (105 kw)	1998.04-2001.11		Centre	Bus RWD 3RZ-FE		Center Bearing Support	538620
	1998.04-2005.06		Centre	Van RWD 3RZ-FE		Center Bearing Support	538620
	1998.04-2006.08		Centre	Bus 4WD 3RZ-FE		Center Bearing Support	538620
2.7 (106 kw)	1998.07-2005.06		Centre	Bus 4WD 3RZ-FE		Center Bearing Support	538620
	1998.07-2005.06		Centre	Van 4WD 3RZ-FE		Center Bearing Support	538620
	1998.07-2006.12		Centre	Bus RWD 3RZ-FE		Center Bearing Support	538620
2.7 (111 kw)	2005.01-	5MT	Rear	Bus RWD 2TRFE		Propshaft	PS900635
	2005.01-2019.05	5MT	Rear	Van RWD 2TRFE		Propshaft	PS900635
2.7 (118 kw)	2013.12-	5MT	Rear	Bus RWD 2TR-FE		Propshaft	PS900635
	2015.01-2019.05	5MT	Rear	Van RWD 2TRFE		Propshaft	PS900635
3.0 (75 kw)	2005.01-	5MT	Rear	Van RWD 1KD-FTV		Propshaft	PS900635
3.0 (80 kw)	2004.08-	5MT	Rear	Bus RWD 1KD-FTV		Propshaft	PS900635
	2006.11-	5MT	Rear	Van RWD 1KD-FTV		Propshaft	PS900635
3.0 (100 kw)	2010.05-2019.05	5MT	Rear	Van RWD 1KDFTV		Propshaft	PS900635
	2010.05-2019.05	5MT	Rear	Bus RWD 1KDFTV		Propshaft	PS900635
3.0 (106 kw)	2008.11-	5MT	Rear	Bus RWD 1KD-FTV		Propshaft	PS900635
	2008.11-2019.05	5MT	Rear	Van RWD 1KDFTV		Propshaft	PS900635
Highlander							
2.4 (115 kw)	2000.06-2003.09	4AT	Rear	SUV 4WD 2AZFE	Date from:2000.11	Propshaft	PS900503
2.4 (118 kw)	2000.06-2003.09	4AT	Rear	SUV 4WD 2AZ-FE	Date from:2000.11	Propshaft	PS900503
3.0 (164 kw)	2000.11-2007.05	4AT	Rear	SUV 4WD 1MZFE		Propshaft	PS900503
3.5 (150 kw)	2013.12-2016.11		Front	SUV 4WD 2GR-FE	Date to:2016.11,AT,Vehicle Production Country:North America	Center Bearing Support	539067
3.5 (183 kw)	2014.09-2019.11	6AT	Rear	SUV 4WD 2GRFE/2GRFKS	Date to:2016.10	Propshaft	PS900477
	2014.09-2019.11	8AT	Rear	SUV 4WD 2GRFE/2GRFKS	Date from:2016.11	Propshaft	PS900477
	2014.09-2019.11		Front	SUV 4WD 2GRFE/2GRFKS	Date to:2016.11,AT	Center Bearing Support	539067
3.5 (201 kw)	2007.06-2014.02	5AT	Rear	SUV 4WD 2GRFE	Date to:2013.11	Propshaft	PS900476
	2007.06-2014.02		Front	SUV 4WD 2GRFE	Date from:2009.05,Vehicle Production Country:China	Center Bearing Support	539067
	2007.06-2014.02		Rear	SUV 4WD 2GRFE		Center Bearing Support	539018
3.5 (218 kw)	2016.11-2021.03		Front	SUV 4WD 2GR-FKS	AT	Center Bearing Support	539067
Highlander/Kluger							
2.4 (116 kw)	2000.09-2007.05	4AT	Rear	SUV 4WD 2AZ-FE	Date from:2000.11	Propshaft	PS900503
3.3 (156 kw)	2003.08-2007.05	5AT	Rear	SUV 4WD 3MZ-FE	Date to:2007.04	Propshaft	PS900503
3.3 (160 kw)	2003.08-2007.08	5AT	Rear	SUV 4WD 3MZ-FE	Date to:2007.04	Propshaft	PS900503
Hilux							
1.8 (61 kw)	1988.08-1997.11		Centre	Pickup RWD 2Y		Center Bearing Support	538626
	1988.08-1997.11		Centre	Pickup RWD 2Y		Center Bearing Support	539022
	1988.08-1997.11		Centre	Pickup RWD 2Y		Center Bearing Support	539024
2.0 (65 kw)	1983.08-1988.07	MT	Rear	Pickup RWD 3Y	Date to:1985.07	Propshaft	PS900483
2.2 (69 kw)	1985.11-1989.12	5MT	Rear	Pickup 4WD 4Y		Propshaft	PS900483
2.4 (55 kw)	1983.08-1988.07	5MT	Front	Pickup 4WD 2L		Propshaft	PS900480
	1983.08-1988.07	5MT	Rear	Pickup 4WD 2L		Propshaft	PS900483
	1984.01-1988.08	5MT	Front	Platform/Chassis 4WD 2L		Propshaft	PS900480
	1994.09-1997.07	5MT	Rear	Pickup 4WD 2L		Propshaft	PS900483

	YEAR	TRANSM.	FITTING POSITION	BODY STYLE & DRIVE TYPE & ENGINE	REMARKS	PRODUCT	GSP Ref.
TOYOTA **Hilux**							
2.4 (55 kw)	1994.09-1997.07		Centre	Pickup 4WD 2L	Installation size:222mm	Center Bearing Support	539022
	1994.09-1997.07		Centre	Pickup 4WD 2L	Installation size:236mm	Center Bearing Support	539023
	1997.08-2005.04		Centre	Pickup RWD 2L		Center Bearing Support	538977
	1997.08-2005.04		Centre	Pickup RWD 2L	539011 and 531656 different structure	Center Bearing Support	539011
2.4 (58 kw)	1991.10-1997.07	5MT	Rear	Pickup 4WD 2L		Propshaft	PS900483
	1991.10-1997.07		Centre	Pickup 4WD 2L		Center Bearing Support	538626
	1991.10-1997.07		Centre	Pickup 4WD 2L		Center Bearing Support	539022
	1991.10-1997.07		Centre	Pickup 4WD 2L		Center Bearing Support	539023
	1991.10-1997.07		Centre	Pickup 4WD 2L		Center Bearing Support	539024
	1995.03-1997.07		Centre	Pickup RWD 2L	Installation size:149mm	Center Bearing Support	538626
	1995.03-1997.07		Centre	Pickup RWD 2L	Installation size:150.5mm	Center Bearing Support	539011
	1995.03-1997.07		Centre	Pickup RWD 2L	Installation size:222mm	Center Bearing Support	539022
	1995.03-1997.07		Centre	Pickup RWD 2L	Installation size:150mm	Center Bearing Support	539024
	1997.08-2005.07		Centre	Pickup RWD 2L	539011 and 531656 different structure	Center Bearing Support	539011
2.4 (59 kw)	1991.10-1997.07		Centre	Pickup RWD 2L		Center Bearing Support	538626
	1991.10-1997.07		Centre	Pickup RWD 2L		Center Bearing Support	539022
	1991.10-1997.07		Centre	Pickup RWD 2L		Center Bearing Support	539024
2.4 (61 kw)	1988.08-1991.09	5MT	Rear	Pickup 4WD 2L		Propshaft	PS900483
	1997.08-2001.08		Centre	Pickup RWD 2L		Center Bearing Support	539011
2.4 (66 kw)	1997.08-2001.07		Centre	Pickup RWD 2LT	539011 and 531656 different structure	Center Bearing Support	539011
	1998.08-2001.07	MT	Rear	Pickup 4WD 2LT	Date to:2001.07	Propshaft	PS900484
	1998.08-2001.07		Centre	Pickup 4WD 2LT		Center Bearing Support	539022
	1998.08-2001.07		Centre	Pickup 4WD 2LT		Center Bearing Support	539025
2.4 (75 kw)	1988.10-1997.12		Centre	Platform/Chassis 4WD 22R		Center Bearing Support	539023
2.4 (84 kw)	1989.09-1997.07		Centre	Pickup 4WD 22RE		Center Bearing Support	538626
	1989.09-1997.07		Centre	Pickup 4WD 22RE		Center Bearing Support	539022
	1989.09-1997.07		Centre	Pickup 4WD 22RE		Center Bearing Support	539023
	1989.09-1997.07		Centre	Pickup 4WD 22RE		Center Bearing Support	539024
2.4 (103 kw)	1997.08-2001.08		Centre	Pickup 4WD 2RZFE	Installation size:149mm	Center Bearing Support	538626
	1997.08-2001.08		Centre	Pickup 4WD 2RZFE	Installation size:150.5mm	Center Bearing Support	539011
	1997.08-2001.08		Centre	Pickup 4WD 2RZFE	Installation size:222mm	Center Bearing Support	539022
	1997.08-2001.08		Centre	Pickup 4WD 2RZFE	Installation size:150mm	Center Bearing Support	539024
2.4 (108 kw)	2015.05-	6MT	Front	Pickup RWD 2GD-FTV		Propshaft	PS901462
	2015.05-	6MT	Front	Pickup 4WD 2GD-FTV		Propshaft	PS901462
	2015.05-		Centre	Pickup RWD 2GD-FTV	Bearing Center Height:15.5mm,For GGN1**,GUN1**,KUN1**,LAN125,TGN1**	Center Bearing Support	538633
	2015.05-		Centre	Pickup 4WD 2GD-FTV	Bearing Center Height:15.5mm,For GGN1**,GUN1**,KUN1**,LAN125,TGN1**	Center Bearing Support	538633
	2015.05-		Centre	Pickup RWD 2GD-FTV	Bearing Center Height:8.5mm,For GUN12*,135	Center Bearing Support	538634
	2015.05-		Centre	Pickup 4WD 2GD-FTV	Bearing Center Height:8.5mm,For GUN12*,135	Center Bearing Support	538634
2.4 (110 kw)	2015.05-	6AT	Front	Pickup 4WD 2GDFTV		Propshaft	PS900472
	2015.05-	6MT	Front	Pickup 4WD 2GDFTV	for OE No.:37140-0K030	Propshaft	PS900479
	2015.05-	6MT	Front	Pickup RWD 2GDFTV		Propshaft	PS901462
	2015.05-	6MT	Front	Pickup 4WD 2GDFTV	for OE No.:37140-0K112	Propshaft	PS901462
	2015.05-	6AT	Rear	Pickup 4WD 2GDFTV		Propshaft	PS901832
	2015.05-	6MT	Rear	Pickup 4WD 2GDFTV		Propshaft	PS901724
	2015.05-		Centre	Pickup RWD 2GDFTV	Bearing Center Height:15.5mm,For GGN1**,GUN1**,KUN1**,LAN125,TGN1**	Center Bearing Support	538633
	2015.05-		Centre	Pickup 4WD 2GDFTV	Bearing Center Height:15.5mm,For GGN1**,GUN1**,KUN1**,LAN125,TGN1**	Center Bearing Support	538633
	2015.05-		Centre	Pickup RWD 2GDFTV	Bearing Center Height:8.5mm,For GUN12*,135	Center Bearing Support	538634
	2015.05-		Centre	Pickup 4WD 2GDFTV	Bearing Center Height:8.5mm,For GUN12*,135	Center Bearing Support	538634
	2015.05-		Centre	Pickup 4WD 2GDFTV		Center Bearing Support Kit	539909S
2.4 (125 kw)	2018.10-	6AT	Front	Pickup 4WD 2GDFTV		Propshaft	PS900472
	2018.10-	6MT	Front	Pickup 4WD 2GDFTV		Propshaft	PS901462
	2018.10-	6MT	Front	Pickup RWD 2GDFTV		Propshaft	PS901462
	2018.10-	6AT	Rear	Pickup 4WD 2GDFTV		Propshaft	PS901832
	2018.10-	6MT	Rear	Pickup 4WD 2GDFTV		Propshaft	PS901724
	2018.10-		Centre	Pickup 4WD 2GDFTV	Bearing Center Height:15.5mm,For GGN1**,GUN1**,KUN1**,LAN125,TGN1**	Center Bearing Support	538633
	2018.10-		Centre	Pickup RWD 2GDFTV	Bearing Center Height:15.5mm,For GGN1**,GUN1**,KUN1**,LAN125,TGN1**	Center Bearing Support	538633
	2018.10-		Centre	Pickup 4WD 2GDFTV	Bearing Center Height:8.5mm,For GUN12*,135	Center Bearing Support	538634
	2018.10-		Centre	Pickup RWD 2GDFTV	Bearing Center Height:8.5mm,For GUN12*,135	Center Bearing Support	538634
2.5 (65 kw)	2001.11-2005.07		Centre	Pickup RWD 2KDFTV	539011 and 531656 different structure	Center Bearing Support	539011
	2001.11-2005.07		Centre	Pickup RWD 2KDFTV		Center Bearing Support	539022
	2001.11-2005.07		Centre	Pickup RWD 2KDFTV		Center Bearing Support	539024
	2005.08-2006.10		Centre	Pickup RWD 2KDFTV	Installation size:151.5mm	Center Bearing Support	538638
	2005.08-2006.10		Centre	Pickup RWD 2KDFTV	Installation size:150.5mm	Center Bearing Support	539011

	YEAR	TRANSM.	FITTING POSITION	BODY STYLE & DRIVE TYPE & ENGINE	REMARKS	PRODUCT	GSP Ref.
TOYOTA **Hilux**							
2.5 (75 kw)	2001.08-2005.08		Centre	Pickup 4WD 2KDFTV	Installation size:149mm	Center Bearing Support	538626
	2001.08-2005.08		Centre	Pickup 4WD 2KDFTV	Installation size:150.5mm	Center Bearing Support	539011
	2001.08-2005.08		Centre	Pickup 4WD 2KDFTV	Installation size:222mm	Center Bearing Support	539022
	2001.08-2005.08		Centre	Pickup 4WD 2KDFTV	Installation size:150mm	Center Bearing Support	539024
	2005.03-2016.02	5MT	Front	Pickup 4WD 2KDFTV	for OE No.:37140-0K030	Propshaft	PS900479
	2005.03-2016.02	5MT	Front	Pickup 4WD 2KDFTV	Date to:2011.07;for OE No.:371400K060	Propshaft	PS901344
	2005.03-2016.02	5MT	Rear	Pickup 4WD 2KDFTV	for OE No.:37100-0K030	Propshaft	PS900481
	2005.03-2016.02	5MT	Rear	Pickup 4WD 2KDFTV	Date from:2005.07,Date to:2011.07;for OE No.:371000K260	Propshaft	PS901347
	2005.03-2016.02	5MT	Rear	Pickup RWD 2KDFTV	Date from:2005.07,Date to:2011.07	Propshaft	PS901347
	2005.03-2016.02		Centre	Pickup 4WD 2KDFTV	Installation size:151.5mm	Center Bearing Support	538638
	2005.03-2016.02		Centre	Pickup RWD 2KDFTV	Installation size:151.5mm	Center Bearing Support	538638
	2005.03-2016.02		Centre	Pickup 4WD 2KDFTV	Installation size:150.5mm	Center Bearing Support	539011
	2005.03-2016.02		Centre	Pickup RWD 2KDFTV	Installation size:150.5mm	Center Bearing Support	539011
	2005.03-2016.02		Centre	Pickup 4WD 2KDFTV	Installation size:150mm	Center Bearing Support	539012
	2005.03-2016.02		Centre	Pickup RWD 2KDFTV	Installation size:150mm	Center Bearing Support	539012
2.5 (88 kw)	2006.06-2015.05	5MT	Front	Pickup 4WD 2KDFTV	for OE No.:37140-0K030	Propshaft	PS900479
	2006.06-2015.05	5MT	Front	Pickup 4WD 2KDFTV	Date to:2011.07;for OE No.:371400K060	Propshaft	PS901344
	2006.06-2015.05	5MT	Rear	Pickup 4WD 2KDFTV	for OE No.:37100-0K030	Propshaft	PS900481
	2006.06-2015.05	5MT	Rear	Pickup 4WD 2KDFTV	Date from:2005.07,Date to:2011.07;for OE No.:371000K260	Propshaft	PS901347
	2006.06-2015.05	5MT	Rear	Pickup RWD 2KDFTV	Date from:2005.07,Date to:2011.07	Propshaft	PS901347
	2006.06-2015.05		Centre	Pickup 4WD 2KDFTV	Installation size:151.5mm	Center Bearing Support	538638
	2006.06-2015.05		Centre	Pickup RWD 2KDFTV	Installation size:151.5mm	Center Bearing Support	538638
	2006.06-2015.05		Centre	Pickup 4WD 2KDFTV	Installation size:150.5mm	Center Bearing Support	539011
	2006.06-2015.05		Centre	Pickup RWD 2KDFTV	Installation size:150.5mm	Center Bearing Support	539011
	2006.06-2015.05		Centre	Pickup 4WD 2KDFTV	Installation size:150mm	Center Bearing Support	539012
	2006.06-2015.05		Centre	Pickup RWD 2KDFTV	Installation size:150mm	Center Bearing Support	539012
2.5 (94 kw)	2004.11-2005.12		Centre	Pickup 4WD 2KDFTV	Installation size:151.5mm	Center Bearing Support	538638
	2004.11-2005.12		Centre	Pickup 4WD 2KDFTV	Installation size:150.5mm	Center Bearing Support	539011
2.5 (106 kw)	2007.12-2015.05	5MT	Front	Pickup 4WD 2KDFTV	for OE No.:37140-0K030	Propshaft	PS900479
	2007.12-2015.05	5MT	Front	Pickup 4WD 2KDFTV	Date to:2011.07;for OE No.:371400K060	Propshaft	PS901344
	2007.12-2015.05	5MT	Rear	Pickup 4WD 2KDFTV	for OE No.:37100-0K030	Propshaft	PS900481
	2007.12-2015.05	5MT	Rear	Pickup 4WD 2KDFTV	Date from:2005.07,Date to:2011.07;for OE No.:371000K260	Propshaft	PS901347
	2007.12-2015.05		Centre	Pickup 4WD 2KDFTV	Installation size:151.5mm	Center Bearing Support	538638
	2007.12-2015.05		Centre	Pickup 4WD 2KDFTV	Installation size:150.5mm	Center Bearing Support	539011
	2007.12-2015.05		Centre	Pickup 4WD 2KDFTV	Installation size:150mm	Center Bearing Support	539012
	2010.01-2016.02		Centre	Pickup RWD 2KDFTV		Center Bearing Support	538638
	2010.01-2016.02		Centre	Pickup RWD 2KDFTV		Center Bearing Support	539012
2.7 (110 kw)	1998.08-2005.08	4AT	Rear	SUV RWD 3RZ-FE	Date to:2002.10	Propshaft	PS901751
2.7 (118 kw)	2005.08-2015.05		Centre	Pickup RWD 2TR-FE	Bearing Center Height:15.5mm,For GGN1**,GUN1**,KUN1**,LAN125,TGN1**	Center Bearing Support	538633
	2005.08-2015.05		Centre	Pickup 4WD 2TR-FE	Bearing Center Height:15.5mm,For GGN1**,GUN1**,KUN1**,LAN125,TGN1**	Center Bearing Support	538633
	2005.08-2015.05		Centre	Pickup RWD 2TR-FE	Bearing Center Height:8.5mm,For GUN12*,135	Center Bearing Support	538634
	2005.08-2015.05		Centre	Pickup 4WD 2TR-FE	Bearing Center Height:8.5mm,For GUN12*,135	Center Bearing Support	538634
	2005.08-2015.05		Centre	Pickup RWD 2TR-FE	For OE No. 37230-0K010	Center Bearing Support	538638
	2005.08-2015.05		Centre	Pickup 4WD 2TR-FE	For OE No. 37230-0K010	Center Bearing Support	538638
	2005.08-2015.05		Centre	Pickup RWD 2TR-FE		Center Bearing Support	539012
	2005.08-2015.05		Centre	Pickup 4WD 2TR-FE		Center Bearing Support	539012
	2015.05-		Centre	Pickup 4WD 2TR-FE	Bearing Center Height:15.5mm,For GGN1**,GUN1**,KUN1**,LAN125,TGN1**	Center Bearing Support	538633
	2015.05-		Centre	Pickup 4WD 2TR-FE	Bearing Center Height:8.5mm,For GUN12*,135	Center Bearing Support	538634
2.7 (121 kw)	2015.05-		Centre	Pickup RWD 2TR-FE	Bearing Center Height:15.5mm,For GGN1**,GUN1**,KUN1**,LAN125,TGN1**	Center Bearing Support	538633
	2015.05-		Centre	Pickup 4WD 2TR-FE	Bearing Center Height:15.5mm,For GGN1**,GUN1**,KUN1**,LAN125,TGN1**	Center Bearing Support	538633
	2015.05-		Centre	Pickup RWD 2TR-FE	Bearing Center Height:8.5mm,For GUN12*,135	Center Bearing Support	538634
	2015.05-		Centre	Pickup 4WD 2TR-FE	Bearing Center Height:8.5mm,For GUN12*,135	Center Bearing Support	538634
2.7 (122 kw)	2015.05-		Centre	Pickup RWD 2TRFE	Bearing Center Height:15.5mm,For GGN1**,GUN1**,KUN1**,LAN125,TGN1**	Center Bearing Support	538633
	2015.05-		Centre	Pickup RWD 2TRFE	Bearing Center Height:8.5mm,For GUN12*,135	Center Bearing Support	538634
2.8 (65 kw)	1995.01-2004.12		Centre	Pickup 4WD 3L		Center Bearing Support	539011
2.8 (128 kw)	2015.05-	6AT	Rear	Pickup 4WD 1GD-FTV		Propshaft	PS901682
2.8 (130 kw)	2015.05-	6AT	Front	Pickup 4WD 1GDFTV		Propshaft	PS900472
	2015.05-	6AT	Rear	Pickup 4WD 1GDFTV		Propshaft	PS901682
	2015.05-		Centre	Pickup RWD 1GDFTV	Bearing Center Height:15.5mm,For GGN1**,GUN1**,KUN1**,LAN125,TGN1**	Center Bearing Support	538633
	2015.05-		Centre	Pickup 4WD 1GDFTV		Center Bearing Support	538633
	2015.05-		Centre	Pickup RWD 1GDFTV	Bearing Center Height:8.5mm,For GUN12*,135	Center Bearing Support	538634
	2015.05-		Centre	Pickup 4WD 1GDFTV		Center Bearing Support	538634
2.8 (150 kw)	2020.06-	6AT	Front	Pickup 4WD 1GDFTV		Propshaft	PS900472
	2020.06-	6AT	Rear	Pickup 4WD 1GDFTV		Propshaft	PS901682

	YEAR	TRANSM.	FITTING POSITION	BODY STYLE & DRIVE TYPE & ENGINE	REMARKS	PRODUCT	GSP Ref.
TOYOTA							
Hilux							
2.8 (150 kw)	2020.06-	6MT	Rear	Pickup 4WD 1GDFTV		Propshaft	PS901724
2.8 (165 kw)	2022.10-	6AT	Rear	Pickup 4WD 1GDFTV		Propshaft	PS901682
3.0 (105 kw)	1989.08-1995.11	4AT/5MT	Front	SUV 4WD 3VZ-E	Date from:1990.08,Date to:1991.07,Transmission:6AT,Date from:1991.08,Date to:1995.10,Transmission:5MT	Propshaft	PS901884
3.0 (120 kw)	2005.03-2016.02	4AT	Front	Pickup 4WD 1KDFTV	Date from:2007.02,Date to:2008.07	Propshaft	PS900472
	2005.03-2016.02	5AT	Front	Pickup 4WD 1KDFTV	Date from:2008.08,Date to:2011.06	Propshaft	PS901354
	2005.03-2016.02	5MT	Front	Pickup 4WD 1KDFTV	Date from:2011.07	Propshaft	PS900479
	2005.03-2016.02	5MT	Front	Pickup 4WD 1KDFTV	Date from:2006.10,Date to:2008.09	Propshaft	PS901344
	2005.03-2016.02	4AT	Rear	Pickup 4WD 1KDFTV	Date from:2007.02,Date to:2008.07	Propshaft	PS900482
	2005.03-2016.02	5MT	Rear	Pickup 4WD 1KDFTV	Date from:2008.08;for OE No.:37100-0K030	Propshaft	PS900481
	2005.03-2016.02	5MT	Rear	Pickup 4WD 1KDFTV	Date from:2005.07,Date to:2011.07;for OE No.:371000K260	Propshaft	PS901347
	2005.03-2016.02		Centre	Pickup 4WD 1KDFTV		Center Bearing Support	538633
	2005.03-2016.02		Centre	Pickup 4WD 1KDFTV		Center Bearing Support	538634
	2005.03-2016.02		Centre	Pickup 4WD 1KDFTV		Center Bearing Support	538638
	2005.03-2016.02		Centre	Pickup 4WD 1KDFTV		Center Bearing Support	539012
3.0 (126 kw)	2005.02-		Centre	Platform/Chassis 4WD 1KD-FTV	Bearing Center Height:15.5mm,For GGN1**,GUN1**,KUN1**,LAN125,TGN1**	Center Bearing Support	538633
	2005.02-		Centre	Platform/Chassis 4WD 1KD-FTV	Bearing Center Height:8.5mm,For GUN12*,135	Center Bearing Support	538634
	2005.02-		Centre	Platform/Chassis 4WD 1KD-FTV		Center Bearing Support	539012
	2006.10-2015.05	4AT	Front	Pickup 4WD 1KDFTV	Date from:2007.02,Date to:2008.07	Propshaft	PS900472
	2006.10-2015.05	5AT	Front	Pickup 4WD 1KDFTV	Date from:2008.08	Propshaft	PS901354
	2006.10-2015.05	5MT	Front	Pickup 4WD 1KDFTV	Date from:2008.10	Propshaft	PS900479
	2006.10-2015.05	5MT	Front	Pickup 4WD 1KDFTV	Date from:2006.10,Date to:2008.09	Propshaft	PS901344
	2006.10-2015.05	4AT	Rear	Pickup 4WD 1KDFTV	Date from:2007.02,Date to:2008.07	Propshaft	PS900482
	2006.10-2015.05	5MT	Rear	Pickup 4WD 1KDFTV	Date from:2008.08;for OE No.:37100-0K030	Propshaft	PS900481
	2006.10-2015.05	5MT	Rear	Pickup 4WD 1KDFTV	Date from:2006.10,Date to:2015.05;for OE No.:371000K260	Propshaft	PS901347
	2006.10-2015.05		Centre	Pickup 4WD 1KDFTV	Installation size:172.5mm,538634 and 539011 different structure	Center Bearing Support	538633
	2006.10-2015.05		Centre	Pickup RWD 1KDFTV	Bearing Center Height:15.5mm,For GGN1**,GUN1**,KUN1**,LAN125,TGN1**	Center Bearing Support	538633
	2006.10-2015.05		Centre	Pickup 4WD 1KDFTV	Installation size:172.5mm,538634 and 539011 different structure	Center Bearing Support	538634
	2006.10-2015.05		Centre	Pickup RWD 1KDFTV	Bearing Center Height:8.5mm,For GUN12*,135	Center Bearing Support	538634
	2006.10-2015.05		Centre	Pickup 4WD 1KDFTV	Installation size:151.5mm	Center Bearing Support	538638
	2006.10-2015.05		Centre	Pickup 4WD 1KDFTV	Installation size:150.5mm	Center Bearing Support	539011
	2006.10-2015.05		Centre	Pickup 4WD 1KDFTV	Installation size:150mm	Center Bearing Support	539012
3.0 (145 kw)	2008.05-2012.12	5MT	Front	Pickup 4WD 1KDFTV	Date to:2011.07	Propshaft	PS901344
	2008.05-2012.12	AT	Front	Pickup 4WD 1KDFTV		Propshaft	PS901354
	2008.05-2012.12	5MT	Rear	Pickup 4WD 1KDFTV	Date from:2005.07,Date to:2011.07	Propshaft	PS901347
	2008.05-2012.12		Centre	Pickup 4WD 1KDFTV	Bearing Center Height:15.5mm,For GGN1**,GUN1**,KUN1**,LAN125,TGN1**	Center Bearing Support	538633
	2008.05-2012.12		Centre	Pickup 4WD 1KDFTV	Bearing Center Height:8.5mm,For GUN12*,135	Center Bearing Support	538634
	2008.05-2012.12		Centre	Pickup 4WD 1KDFTV	Bracket Fix Hole:30.5mm	Center Bearing Support	538638
3.4 (131 kw)	2001.08-2005.07	5MT	Rear	Pickup 4WD 5VZ-FE	Model year to:2004	Propshaft	PS901624
4.0 (175 kw)	2005.08-2016.02		Centre	Pickup 4WD 1GR-FE	Bearing Center Height:15.5mm,For GGN1**,GUN1**,KUN1**,LAN125,TGN1**	Center Bearing Support	538633
	2005.08-2016.02		Centre	Pickup 4WD 1GR-FE	Bearing Center Height:8.5mm,For GUN12*,135	Center Bearing Support	538634
	2005.08-2016.02		Centre	Pickup 4WD 1GR-FE	Date to:2016.09	Center Bearing Support	538638
	2005.08-2016.02		Centre	Pickup 4WD 1GR-FE		Center Bearing Support	539012
	2015.07-		Centre	Pickup 4WD 1GR-FE		Center Bearing Support	538633
	2015.07-		Centre	Pickup 4WD 1GR-FE		Center Bearing Support	538634
Hilux Surf							
2.4 (69 kw)	1989.08-1995.10		Centre	SUV 4WD 2LT		Center Bearing Support	539022
	1989.08-1995.10		Centre	SUV 4WD 2LT		Center Bearing Support	539024
2.8 (61 kw)	1989.08-1995.10		Centre	SUV 4WD 3L		Center Bearing Support	539022
3.0 (112 kw)	1989.08-1995.11	4AT/5MT	Front	SUV 4WD 3VZ-E	Date from:1990.08,Date to:1991.07,Transmission:6AT,Date from:1991.08,Date to:1995.10,Transmission:5MT	Propshaft	PS901884
Hilux/Tacoma							
3.4 (140 kw)	1995.01-2005.07	5MT	Rear	Pickup 4WD 5VZ-FE		Propshaft	PS901624
Innova							
2.0 (100 kw)	2003.07-		Centre	MPV RWD 1TR-FE		Center Bearing Support	538638
2.7 (118 kw)	2004.04-		Centre	MPV RWD 2TR-FE		Center Bearing Support	538638
Innova/Kijanginnova/Zace							
2.0 (98 kw)	2009.01-2016.03		Centre	MPV RWD 1TR-FE		Center Bearing Support	538638
Ipsum							
2.4 (118 kw)	2001.05-2010.12		Rear	MPV 4WD 2AZFE		Center Bearing Support	539018
IST							
1.5 (80 kw)	2002.05-2007.06		Front	Hatchback 4WD 1NZ-FE		Center Bearing Support	539067
Kluger							
3.0 (150 kw)	2003.10-2007.05	5AT	Rear	SUV 4WD 1MZ-FE		Propshaft	PS900503
	2003.10-2007.05		Rear	SUV 4WD 1MZ-FE		Center Bearing Support	539018

	YEAR	TRANSM.	FITTING POSITION	BODY STYLE & DRIVE TYPE & ENGINE	REMARKS	PRODUCT	GSP Ref.
TOYOTA							
Kluger							
3.3 (171 kw)	2003.10-2007.05	5AT	Rear	SUV 4WD 3MZFE	Date to:2007.04	Propshaft	PS900503
Land Cruiser							
3.0 (127 kw)	2009.11-	6MT	Front	Terrain cab wagon closed 4WD 1KDFTV	Date from:2009.11	Propshaft	PS901376
	2009.11-	6MT	Rear	Terrain cab wagon closed 4WD 1KDFTV	Model:Land Cruiser Prado,Date to:2015.05;Model:Land Cruiser,Date from:2017.08,Date to:2020.06	Propshaft	PS901826
3.0 (140 kw)	2009.08-	6MT	Front	Terrain cab wagon closed 4WD 1KDFTV		Propshaft	PS901376
	2009.08-	6MT	Rear	Terrain cab wagon closed 4WD 1KDFTV	Model:Land Cruiser Prado,Date to:2015.09;Model:Land Cruiser,Modelcode:KDJ150,Date from:2017.08,Date to:2020.06	Propshaft	PS901826
3.5 (85 kw)	1990.01-1992.08	5MT	Rear	Terrain cab open 4WD 1PZ		Propshaft	PS900486
4.0 (110 kw)	1984.11-1992.08		Front	Closed Off-Road Vehicle 4WD 3F	Date from:1990.01	Propshaft	PS900489
	1984.11-1992.08	MT	Rear	Closed Off-Road Vehicle 4WD 3F	Model year from:1990	Propshaft	PS901620
4.0 (202 kw)	2010.01-	5AT	Front	Terrain cab wagon closed 4WD 1GRFE		Propshaft	PS900466
	2010.01-	6AT	Front	Terrain cab wagon closed 4WD 1GRFE	Model year from:2015,Model year to:2017	Propshaft	PS901622
	2010.01-	5AT	Rear	Terrain cab wagon closed 4WD 1GRFE	Date to:2011.09	Propshaft	PS900467
4.0 (205 kw)	2010.01-	5AT	Front	Terrain cab wagon closed 4WD 1GRFE		Propshaft	PS900466
	2010.01-	6AT	Front	Terrain cab wagon closed 4WD 1GRFE	Model year from:2015,Model year to:2017	Propshaft	PS901622
	2010.01-	5AT	Rear	Terrain cab wagon closed 4WD 1GRFE	Date to:2011.09	Propshaft	PS900467
4.0 (207 kw)	2010.01-	5AT	Front	Terrain cab wagon closed 4WD 1GRFE		Propshaft	PS900466
	2010.01-	6AT	Front	Terrain cab wagon closed 4WD 1GRFE	Model year from:2015,Model year to:2017	Propshaft	PS901622
	2010.01-	5AT	Rear	Terrain cab wagon closed 4WD 1GRFE	Date to:2011.09	Propshaft	PS900467
4.2 (96 kw)	1990.01-1999.12	5MT	Front	Terrain cab wagon closed 4WD 1HZ	Date to:1999.07	Propshaft	PS900489
	1990.01-1999.12	5MT	Rear	Terrain cab wagon closed 4WD 1HZ	For Modelcode:HZJ79	Propshaft	PS900487
	1990.01-1999.12	5MT	Rear	Terrain cab wagon closed 4WD 1HZ	Model year from:2005,Model year to:2007,For Modelcode:HZJ105	Propshaft	PS901620
	1990.01-1999.12	MT	Rear	Terrain cab wagon closed 4WD 1HZ	Model year from:1992,Model year to:2001,For Modelcode:HZJ80	Propshaft	PS901620
	1990.01-2007.02	5MT	Rear	Platform/Chassis 4WD 1H-Z	Model year to:1993	Propshaft	PS900486
4.2 (123 kw)	1990.01-2001.08	MT	Rear	Open Off-Road Vehicle 4WD 1H-Z	Date from:1999.08	Propshaft	PS900485
	1990.01-2001.08	MT	Rear	Open Off-Road Vehicle 4WD 1H-Z	Date to:1999.07	Propshaft	PS900486
	1990.01-2001.08	MT	Rear	Terrain cab wagon closed 4WD 1HZ	Model year from:1992	Propshaft	PS901620
Land Cruiser 200							
4.0 (199 kw)	2012.01-	5AT/6AT	Rear	Closed Off-Road Vehicle 4WD 1GR-FE	Transmission:5AT,Date from:2015.08,Date to:2017.06;Transmission:6AT,Date from:2017.08	Propshaft	PS901877
Land Cruiser 400							
4.2 (96 kw)	1996.04-2001.08	5MT	Front	Terrain cab wagon closed 4WD 1HZ	Date to:1999.07	Propshaft	PS900489
	1996.04-2001.08	5MT	Rear	Terrain cab wagon closed 4WD 1HZ	For Modelcode:HZJ79	Propshaft	PS900487
	1996.04-2001.08	MT	Rear	Terrain cab wagon closed 4WD 1HZ	Model year from:1992,Model year to:2001,For Modelcode:HZJ80	Propshaft	PS901620
Land Cruiser 70							
4.0 (170 kw)	2007.03-	5MT	Front	Closed Off-Road Vehicle 4WD 1GR-FE	Model year from:2009,Model year to:2016	Propshaft	PS900468
	2007.03-	6AT	Front	Closed Off-Road Vehicle 4WD 1GR-FE	Model year from:2017	Propshaft	PS901622
4.2 (96 kw)	1996.04-	5MT	Front	Terrain cab wagon closed 4WD 1HZ	Date to:1999.07	Propshaft	PS900489
	1996.04-	5MT	Rear	Terrain cab wagon closed 4WD 1HZ	For Modelcode:HZJ79	Propshaft	PS900487
	1996.04-	5MT	Rear	Terrain cab wagon closed 4WD 1HZ	Model year from:2005,Model year to:2007,For Modelcode:HZJ105	Propshaft	PS901620
	1996.04-	MT	Rear	Terrain cab wagon closed 4WD 1HZ	Model year from:1992,Model year to:2001,For Modelcode:HZJ80	Propshaft	PS901620
4.5 (151 kw)	2007.01-	5MT	Front	Closed Off-Road Vehicle 4WD 1VD-FTV	Model year to:2016	Propshaft	PS900468
4.5 (165 kw)	1992.08-2009.06	5MT	Front	Closed Off-Road Vehicle 4WD 1FZ-FE	Model year from:2007	Propshaft	PS900468
	1992.08-2009.06	5MT	Rear	Closed Off-Road Vehicle 4WD 1FZ-FE	Date from:1999.08	Propshaft	PS900487
Land Cruiser 80							
4.0 (110 kw)	1990.01-1992.07	4AT	Front	Closed Off-Road Vehicle 4WD 3F	Date to:1991.12	Propshaft	PS901754
4.2 (94 kw)	1990.01-1997.12	4AT	Front	Closed Off-Road Vehicle 4WD 1H-Z	Date to:1992.07	Propshaft	PS901754
	1990.01-1997.12	5MT	Front	Closed Off-Road Vehicle 4WD 1H-Z		Propshaft	PS900490
4.2 (99 kw)	1990.01-1997.12	5MT	Front	Terrain cab wagon closed 4WD 1HZ		Propshaft	PS900490
4.2 (115 kw)	1990.01-1992.08	4AT	Front	Closed Off-Road Vehicle 4WD 1HD-T		Propshaft	PS901754
4.2 (118 kw)	1992.10-1997.12	5MT	Front	Terrain cab wagon closed 4WD 1HDT		Propshaft	PS900490
	1992.10-1997.12	MT	Rear	Terrain cab wagon closed 4WD 1HDT		Propshaft	PS901620
4.2 (123 kw)	1990.01-1997.12	5MT	Front	Terrain cab wagon closed 4WD 1HDT	Date from:1992.08	Propshaft	PS900490
	1990.01-1997.12	MT	Rear	Terrain cab wagon closed 4WD 1HDT	Model year from:1992	Propshaft	PS901620
4.5 (140 kw)	1992.01-1997.12	5MT	Front	Closed Off-Road Vehicle 4WD 1FZF		Propshaft	PS900490
Land Cruiser 90							
3.0 (92 kw)	1996.04-2000.07	MT	Front	Terrain cab wagon closed 4WD 1KZTE		Propshaft	PS901672
	1996.04-2000.07	5MT	Rear	Terrain cab wagon closed 4WD 1KZTE	Date from:1999.06,Date to:2002.08	Propshaft	PS901744
3.0 (120 kw)	2000.08-2002.08	MT	Front	Terrain cab wagon closed 4WD 1KDFTV		Propshaft	PS901672
Land Cruiser Colorado							
3.0 (92 kw)	1996.04-2001.12	MT	Front	Terrain cab wagon closed 4WD 1KZTE		Propshaft	PS901672
3.0 (120 kw)	2000.03-2003.03	MT	Front	Terrain cab wagon closed 4WD 1KDFTV		Propshaft	PS901672
Land Cruiser Prado							
2.7 (120 kw)	2003.11-2010.02	4AT	Front	Terrain cab wagon closed 4WD 2TRFE	Date from:2004.08,Date to:2009.07	Propshaft	PS901376
	2009.08-	6MT	Front	Terrain cab wagon closed 4WD 2TRFE	Date from:2013.08	Propshaft	PS901376

	YEAR	TRANSM.	FITTING POSITION	BODY STYLE & DRIVE TYPE & ENGINE	REMARKS	PRODUCT	GSP Ref.
TOYOTA **Land Cruiser Prado**							
3.0 (70 kw)	2002.09-2010.02	5MT	Rear	Terrain cab wagon closed 4WD 5LE		Propshaft	PS900469
3.0 (92 kw)	1996.04-2001.01	MT	Front	Terrain cab wagon closed 4WD 1KZTE		Propshaft	PS901672
3.0 (120 kw)	2002.09-2009.08	5MT/6MT	Front	Terrain cab wagon closed 4WD 1KDFTV	Date to:2004.07,Transmission:5MT;Date from:2004.08,Transmission:6MT	Propshaft	PS901376
	2002.09-2009.08	6MT/5MT	Rear	Terrain cab wagon closed 4WD 1KDFTV	Transmission:5MT,Date to:2004.07;Transmission:6MT,Date from:2004.08	Propshaft	PS901826
3.0 (122 kw)	2004.10-2006.10	6MT	Front	Terrain cab wagon closed 4WD 1KDFTV	Date from:2004.10,Date to:2006.10	Propshaft	PS901376
	2004.10-2006.10	6MT	Rear	Terrain cab wagon closed 4WD 1KDFTV		Propshaft	PS901826
3.0 (127 kw)	2002.09-2010.12	5MT/6MT	Front	Terrain cab wagon closed 4WD 1KDFTV	Date to:2004.07,Transmission:5MT;Date from:2004.08,Date to:2009.07,Transmission:6MT	Propshaft	PS901376
	2002.09-2010.12	6MT/5MT	Rear	Terrain cab wagon closed 4WD 1KDFTV	Transmission:5MT;Date to:2004.07;Transmission:6MT,Date from:2004.08,Date to:2009.07	Propshaft	PS901826
	2009.08-	6MT	Front	Terrain cab wagon closed 4WD 1KDFTV		Propshaft	PS901376
	2009.08-	6MT	Rear	Terrain cab wagon closed 4WD 1KDFTV	Model:Land Cruiser Prado,Date to:2015.05;Model:Land Cruiser,Date from:2017.08,Date to:2020.06	Propshaft	PS901826
3.0 (140 kw)	2009.08-	6MT	Front	Terrain cab wagon closed 4WD 1KDFTV		Propshaft	PS901376
	2009.08-	6MT	Rear	Terrain cab wagon closed 4WD 1KDFTV	Model:Land Cruiser Prado,Date to:2015.05;Model:Land Cruiser;Modelcode:KDJ150,Date from:2017.08,Date to:2020.06	Propshaft	PS901826
4.0 (179 kw)	2002.09-2010.08	4AT/5AT	Front	Terrain cab wagon closed 4WD 1GRFE		Propshaft	PS900466
	2002.09-2010.08	AT	Rear	Terrain cab wagon closed 4WD 1GRFE	Transmission:4AT,Date from:2003.01,Date to:2004.07;Transmission:5AT,Date from:2004.08	Propshaft	PS900467
4.0 (183 kw)	2002.12-2010.12	4AT	Front	Terrain cab wagon closed 4WD 1GRFE		Propshaft	PS900466
	2002.12-2010.12	AT	Rear	Terrain cab wagon closed 4WD 1GRFE	Transmission:4AT,Date from:2003.01,Date to:2004.07;Transmission:5AT,Date from:2004.08,Date to:2009.07	Propshaft	PS900467
	2012.11-	5AT	Front	Terrain cab wagon closed 4WD 1GRFE		Propshaft	PS900466
	2012.11-	6AT	Front	Terrain cab wagon closed 4WD 1GRFE	Model year from:2015,Model year to:2017	Propshaft	PS901622
	2012.11-	5AT	Rear	Terrain cab wagon closed 4WD 1GRFE	Date from:2013.08,Date to:2015.05	Propshaft	PS900467
4.0 (203 kw)	2005.08-2009.07	4AT/5AT	Front	Closed Off-Road Vehicle 4WD 1GR-FE		Propshaft	PS900466
	2005.08-2009.07	5AT	Rear	Closed Off-Road Vehicle 4WD 1GR-FE		Propshaft	PS900467
	2010.01-	5AT	Front	Closed Off-Road Vehicle 4WD 1GR-FE		Propshaft	PS900466
	2010.01-	6AT	Front	Closed Off-Road Vehicle 4WD 1GR-FE	Model year from:2015,Model year to:2017	Propshaft	PS901622
	2010.01-	5AT	Rear	Closed Off-Road Vehicle 4WD 1GR-FE	Date to:2011.09;Date from:2013.08,Date to:2015.05	Propshaft	PS900467
4.0 (204 kw)	2013.08-	5AT	Front	Closed Off-Road Vehicle 4WD 1GR-FE		Propshaft	PS900466
	2013.08-	6AT	Front	Closed Off-Road Vehicle 4WD 1GR-FE	Model year from:2015,Model year to:2017	Propshaft	PS901622
	2013.08-	5AT	Rear	Closed Off-Road Vehicle 4WD 1GR-FE	Date to:2015.05	Propshaft	PS900467
4.0 (207 kw)	2003.01-2009.07	5AT	Front	Terrain cab wagon closed 4WD 1GRFE		Propshaft	PS900466
	2003.01-2009.07	AT	Rear	Terrain cab wagon closed 4WD 1GRFE	Transmission:4AT,Date from:2003.01,Date to:2004.07;Transmission:5AT,Date from:2004.08	Propshaft	PS900467
	2010.01-	5AT	Front	Terrain cab wagon closed 4WD 1GRFE		Propshaft	PS900466
	2010.01-	6AT	Front	Terrain cab wagon closed 4WD 1GRFE	Model year from:2015,Model year to:2017	Propshaft	PS901622
	2010.01-	5AT	Rear	Terrain cab wagon closed 4WD 1GRFE	Date to:2011.09	Propshaft	PS900467
Land Cruiser Van							
3.0 (140 kw)	2011.01-	6MT	Front	Terrain cab wagon closed 4WD 1KDFTV		Propshaft	PS901376
Mark II							
3.0 (169 kw)	1992.10-1996.09		Centre	Saloon RWD 2JZ-GE		Center Bearing Support	539015
Matrix							
2.4 (117 kw)	2009.01-2010.12	AT	Rear	Hatchback 4WD 2AZFE		Propshaft	PS901666
Noah							
2.0 (112 kw)	2001.11-2007.06		Rear	MPV 4WD 1AZFSE		Center Bearing Support	539018
Opa							
1.8 (92 kw)	2000.04-2003.08		Rear	Estate 4WD 1ZZFE		Center Bearing Support	539063
Platz							
1.3 (63 kw)	1999.08-2005.08		Front	Saloon 4WD 2NZ-FE		Center Bearing Support	539067
Premio							
1.8 (92 kw)	2001.12-2007.06		Rear	Saloon 4WD 1ZZFE		Center Bearing Support Kit	539064S
	2008.01-		Rear	Saloon 4WD 2ZRFAE		Center Bearing Support Kit	539064S
1.8 (96 kw)	2013.03-		Front	Saloon 4WD 2ZR-FAE		Center Bearing Support	539028
	2013.03-		Rear	Saloon 4WD 2ZR-FAE		Center Bearing Support Kit	539064S
1.8 (97 kw)	2001.12-2007.04		Front	Saloon 4WD 1ZZ-FE		Center Bearing Support	539028
	2001.12-2007.04		Rear	Saloon 4WD 1ZZ-FE		Center Bearing Support Kit	539064S
1.8 (98 kw)	2007.07-2013.02		Rear	Saloon 4WD 2ZR-FAE	Date from:2010.04	Center Bearing Support Kit	539064S
Previa							
2.4 (97 kw)	1990.05-2000.08		Centre	MPV 4WD 2TZFE		Center Bearing Support	539017
	1990.05-2000.08		Front;Rear	MPV 4WD 2TZFE		Flexible Coupling	511086
	1990.05-2000.08		Front;Rear	MPV RWD 2TZFE		Flexible Coupling	511086
	1990.05-2000.08		Front;Rear	MPV 4WD 2TZFE		Flexible Coupling Kit	511086S
	1990.05-2000.08		Front;Rear	MPV RWD 2TZFE		Flexible Coupling Kit	511086S
Previa (Nato)							
2.4 (118 kw)	1993.09-1997.07		Front;Rear	MPV RWD 2TZFZE		Flexible Coupling	511086
Previa I/Estima/Previa							
2.4 (118 kw)	1993.09-1997.12		Centre	MPV 4WD 2TZ-FZE		Center Bearing Support	539017
	1993.09-1997.12		Front;Rear	MPV 4WD 2TZ-FZE		Flexible Coupling	511086

	YEAR	TRANSM.	FITTING POSITION	BODY STYLE & DRIVE TYPE & ENGINE	REMARKS	PRODUCT	GSP Ref.
TOYOTA							
Probox							
1.5 (80 kw)	2002.07-2014.08		Front	Estate 4WD 1NZ-FE	MT	Center Bearing Support	539067
Rav 4							
2.0 (85 kw)	2001.09-2005.11	MT	Rear	SUV 4WD 1CDFTV	For Modelcode:CLA21,Two Piece Shaft	Propshaft	PS900492
	2001.09-2005.11	MT	Rear	SUV 4WD 1CDFTV	For Modelcode:CLA20,Date to:2003.06	Propshaft	PS900565
	2001.09-2005.11	MT	Rear	SUV 4WD 1CDFTV	For Modelcode:CLA21,One Piece Shaft	Propshaft	PS900589
	2001.09-2005.11	MT	-	SUV 4WD 1CDFTV	For Modelcode:CLA21	Joint,propshaft	602448
	2001.09-2005.11		Centre	SUV 4WD 1CDFTV		Center Bearing Support	538637
2.0 (91 kw)	2013.11-2018.11	5MT	Rear	SUV 4WD 1ADFTV	Date from:2013.11,Date to:2015.09	Propshaft	PS900493
	2013.11-2018.11		Centre	SUV 4WD 1ADFTV		Center Bearing Support	539940
	2013.11-2018.11		Centre	SUV Van 4WD 1ADFTV		Center Bearing Support	539940
	2013.11-2018.11		Centre	SUV 4WD 1ADFTV		Center Bearing Support Kit	538682S
2.0 (94 kw)	1996.07-2000.06		Centre	SUV 4WD 3S-FE		Center Bearing Support	539029
	1997.12-2000.06		Centre	SUV 4WD 3S-FE		Center Bearing Support	539029
2.0 (95 kw)	1994.06-2000.08		Centre	SUV 4WD 3SFE		Center Bearing Support	539029
2.0 (107 kw)	2012.12-2019.09	6MT/CVT	Rear	SUV 4WD 3ZRFE	Date from:2015.10,Date to:2019.08	Propshaft	PS900493
	2012.12-2019.09		Centre	SUV 4WD 3ZRFE		Center Bearing Support	539940
2.0 (109 kw)	2009.03-2013.06	6MT/CVT	Rear	SUV 4WD 3ZRFAE	Date to:2012.11	Propshaft	PS900551
	2009.03-2013.06		Centre	SUV 4WD 3ZRFAE		Center Bearing Support	539940
2.0 (110 kw)	2000.05-2005.11	AT/MT	Rear	SUV 4WD 1AZFE	For Modelcode:ACA21;Two Piece Shaft	Propshaft	PS900492
	2000.05-2005.11	AT/MT	Rear	SUV 4WD 1AZFE	For Modelcode:ACA20;Transmission:MT,Date to:2003.06	Propshaft	PS900565
	2000.05-2005.11	AT/MT	Rear	SUV 4WD 1AZFE	For Modelcode:ACA21;One Piece Shaft	Propshaft	PS900589
	2000.05-2005.11	AT/MT	-	SUV 4WD 1AZFE	For Modelcode:ACA21	Joint,propshaft	602448
	2000.05-2005.11		Centre	SUV 4WD 1AZFE		Center Bearing Support	538637
2.0 (111 kw)	2012.12-2018.10		Rear	SUV 4WD 3ZRFAE	Date to:2018.09	Propshaft	PS900493
	2012.12-2018.10		Centre	SUV 4WD 3ZRFAE		Center Bearing Support	539940
	2012.12-2018.10		Centre	SUV 4WD 3ZRFAE		Center Bearing Support Kit	538682S
	2012.12-2018.11		Centre	SUV Van 4WD 3ZRFAE		Center Bearing Support	539940
2.0 (112 kw)	2006.02-2013.06	4AT/5MT	Rear	SUV 4WD 1AZFE	Date to:2012.11	Propshaft	PS900551
	2006.02-2013.06		Centre	SUV 4WD 1AZFE		Center Bearing Support	539940
	2006.02-2013.06		Centre	SUV 4WD 1AZFE		Center Bearing Support Kit	538682S
	2015.04-2018.10	CVT	Rear	SUV 4WD 3ZRFAE	Date to:2018.09	Propshaft	PS900493
	2015.04-2018.10		Centre	SUV 4WD 3ZRFAE		Center Bearing Support	539940
	2015.04-2018.10		Centre	SUV 4WD 3ZRFAE		Center Bearing Support Kit	538682S
	2015.04-2018.11		Centre	SUV Van 4WD 3ZRFAE		Center Bearing Support	539940
2.0 (116 kw)	2008.12-2013.06	6MT/CVT	Rear	SUV 4WD 3ZRFAE	Date to:2012.11	Propshaft	PS900551
	2008.12-2013.06		Centre	SUV 4WD 3ZRFAE		Center Bearing Support	539940
	2008.12-2013.06		Centre	SUV 4WD 3ZRFAE		Center Bearing Support Kit	538682S
2.2 (98 kw)	2005.11-2010.12	6MT	Rear	SUV 4WD 2ADFTV	Date from:2007.01	Propshaft	PS900551
	2005.11-2010.12		Centre	SUV 4WD 2ADFTV		Center Bearing Support	539940
2.2 (100 kw)	2006.02-2012.12	6MT	Rear	SUV 4WD 2ADFTV	Date from:2007.01,Date to:2012.11	Propshaft	PS900551
	2006.02-2012.12		Centre	SUV 4WD 2ADFTV		Center Bearing Support	539940
	2006.02-2012.12		Centre	SUV 4WD 2ADFTV		Center Bearing Support Kit	538682S
2.2 (110 kw)	2008.12-2013.06	6MT	Rear	SUV 4WD 2ADFTV	Date to:2012.11	Propshaft	PS900551
	2008.12-2013.06		Centre	SUV 4WD 2ADFTV		Center Bearing Support	539940
	2008.12-2013.06		Centre	SUV 4WD 2ADFTV		Center Bearing Support Kit	538682S
	2012.12-2018.11		Centre	SUV Van 4WD 2ADFTV		Center Bearing Support	539940
	2012.12-2019.09	6MT	Rear	SUV 4WD 2ADFHV/2ADFTV	Date to:2018.09	Propshaft	PS900493
	2012.12-2019.09		Centre	SUV 4WD 2ADFHV/2ADFTV		Center Bearing Support	539940
2.2 (130 kw)	2006.02-2013.06	6AT	Rear	SUV 4WD 2ADFHV	Date to:2012.11	Propshaft	PS900551
	2006.02-2013.06		Centre	SUV 4WD 2ADFHV		Center Bearing Support	539940
	2006.02-2013.06		Centre	SUV 4WD 2ADFHV		Center Bearing Support Kit	538682S
	2012.12-	6AT	Rear	SUV 4WD 2ADFHV	Date to:2018.09	Propshaft	PS900493
2.4 (112 kw)	2000.08-2005.11	AT/MT	Rear	SUV 4WD 2AZFE	For Modelcode:ACA23	Propshaft	PS900492
	2000.08-2005.11	AT/MT	Rear	SUV 4WD 2AZFE	For Modelcode:ACA22	Propshaft	PS900565
	2000.08-2005.11		Centre	SUV 4WD 2AZFE		Center Bearing Support	538637
2.4 (120 kw)	2003.08-2005.11		Rear	SUV 4WD 2AZ-FE	For Modelcode:ACA23	Propshaft	PS900492
	2003.08-2005.11		Rear	SUV 4WD 2AZ-FE	For Modelcode:ACA22	Propshaft	PS900565
2.4 (122 kw)	2000.05-2005.11	AT/MT	Rear	SUV 4WD 2AZ-FE	Date from:2003.07,Date to:2005.10	Propshaft	PS900492
2.4 (125 kw)	2005.11-2013.06	4AT	Rear	SUV 4WD 2AZFE	Date from:2007.01,Date to:2008.11,For Modelcode:ACA31	Propshaft	PS900551
	2005.11-2013.06	4AT/5MT	Rear	SUV 4WD 2AZFE	Date to:2012.11,For Modelcode:ACA33	Propshaft	PS900493
	2005.11-2013.06		Centre	SUV 4WD 2AZFE		Center Bearing Support	539940
2.5 (131 kw)	2012.12-2018.12		Centre	SUV 4WD 2AR-FE		Center Bearing Support	539940
2.5 (132 kw)	2008.11-2013.06		Centre	SUV 4WD 2AR-FE		Center Bearing Support	539940
	2012.12-2018.11	6AT	Rear	SUV 4WD 2ARFE	Date from:2015.10,Date to:2019.08	Propshaft	PS900493

	YEAR	TRANSM.	FITTING POSITION	BODY STYLE & DRIVE TYPE & ENGINE	REMARKS	PRODUCT	GSP Ref.
TOYOTA							
Rav 4							
2.5 (132 kw)	2012.12-2018.11		Centre	SUV 4WD 2ARFE		Center Bearing Support	539940
3.5 (198 kw)	2005.11-2012.12		Centre	SUV 4WD 2GR-FE		Center Bearing Support	539940
3.5 (201 kw)	2005.11-2012.12	5AT	Rear	SUV 4WD 2GRFE	Date from:2007.08,Date to:2012.11	Propshaft	PS900493
	2005.11-2012.12		Centre	SUV 4WD 2GRFE		Center Bearing Support	539940
Rav 4L							
2.0 (121 kw)	1994.01-1999.09		Centre	SUV 4WD 3S-GE		Center Bearing Support	539029
Royal							
3.0 (147 kw)	1999.09-2003.08		Centre	Saloon RWD 2JZ-FSE		Center Bearing Support	539020
	1999.09-2003.08		Rear	Saloon RWD 2JZ-FSE	AT	Flexible Coupling	517649
Sienna							
3.5 (196 kw)	2010.02-	6AT	Rear	MPV 4WD 2GRFE	Date to:2014.08	Propshaft	PS900497
3.5 (198 kw)	2007.01-2010.03	AT	Rear	MPV 4WD 2GRFE		Propshaft	PS900496
	2011.09-	6AT	Rear	MPV 4WD 2GRFE	Date to:2014.08	Propshaft	PS900497
3.5 (220 kw)	2016.08-	8AT	Rear	MPV 4WD 2GR-FKS	Date to:2017.10;Data from:2018.08,Date to:2020.08	Propshaft	PS900497
Soarer							
2.5 (206 kw)	1991.05-2000.12		Rear	Coupe RWD 1JZGTE	Date from:1991.05,MT	Flexible Coupling	517649
3.0 (166 kw)	1990.09-2000.09		Rear	Coupe RWD 2JZGE	Date from:1991.05,AT	Flexible Coupling	517649
3.0 (169 kw)	1997.08-2000.12		Rear	Coupe RWD 2JZ-GE	AT	Flexible Coupling	517649
4.0 (191 kw)	1991.05-1997.09		Rear	Coupe RWD 1UZ-FE	AT	Flexible Coupling	517649
4.0 (195 kw)	1995.05-1997.09		Rear	Coupe RWD 1UZFE	AT	Flexible Coupling	517649
4.3 (208 kw)	2000.10-2005.10		Centre	Coupe RWD 3UZ-FE		Center Bearing Support	539020
	2000.10-2005.10		Rear	Coupe RWD 3UZ-FE	Date from:2001.04,AT	Flexible Coupling	517649
Sprinter							
1.6 (85 kw)	1991.09-1995.05		Rear	Saloon 4WD 4AFE		Center Bearing Support	539013
1.6 (100 kw)	1995.04-2000.11		Rear	Saloon FWD 4A-FE		Center Bearing Support	539013
1.8 (50 kw)	1996.11-1997.04		Rear	Saloon FWD		Center Bearing Support	539013
1.8 (81 kw)	1992.11-1997.04		Rear	Saloon FWD 7A-FE		Center Bearing Support	539013
2.2 (58 kw)	1998.04-2000.08		Rear	Saloon 4WD 3CE		Center Bearing Support	539013
Sprinter Carib							
1.6 (85 kw)	1996.05-2002.05		Rear	Estate 4WD 4A-FE		Center Bearing Support	539013
1.8 (50 kw)	1996.11-1997.04		Rear	Estate FWD		Center Bearing Support	539013
1.8 (81 kw)	1992.11-1997.04		Rear	Estate FWD 7A-FE		Center Bearing Support	539013
1.8 (85 kw)	1995.08-2001.10		Rear	Estate FWD 7A-FE		Center Bearing Support	539013
	1995.08-2001.10		Rear	Estate 4WD 7A-FE		Center Bearing Support	539013
Sprinter Cielo							
1.6 (81 kw)	1992.06-1997.04		Rear	Hatchback FWD 4A-FE		Center Bearing Support	539013
1.6 (100 kw)	1995.04-2000.11	4AT/5MT	-	Hatchback FWD 4A-FE		Joint,propshaft	699196
	1995.04-2000.11		Rear	Hatchback FWD 4A-FE		Center Bearing Support	539013
1.6 (136 kw)	1992.05-1997.07		Rear	Hatchback FWD 4A-FE		Center Bearing Support	539013
1.8 (81 kw)	1992.11-1997.04		Rear	Hatchback FWD 7A-FE		Center Bearing Support	539013
2.0 (54 kw)	1995.04-2000.11		Rear	Hatchback FWD 2C		Center Bearing Support	539013
Supra							
2.0 (145 kw)	2019.06-		Front	Coupe RWD B48L	Width:30mm	Flexible Coupling	510596
	2019.06-		Front	Coupe RWD B48L	Width:32mm	Flexible Coupling	533422
2.0 (190 kw)	2019.06-		Front	Coupe RWD B48H	Width:30mm	Flexible Coupling	510596
	2019.06-		Front	Coupe RWD B48H	Width:32mm	Flexible Coupling	533422
3.0 (165 kw)	1993.01-1999.10		Rear	Coupe RWD 2JZGE	MT,for left-hand drive vehicles	Flexible Coupling	517649
3.0 (168 kw)	1993.05-2002.07		Rear	Coupe RWD 2JZ-GE	MT	Flexible Coupling	517649
3.0 (210 kw)	1993.06-2002.08		Rear	Coupe RWD 2JZGTE	MT,for left-hand drive vehicles	Flexible Coupling	517649
3.0 (240 kw)	1994.03-2002.07		Rear	Coupe RWD 2JZ-GTE	MT,for left-hand drive vehicles	Flexible Coupling	517649
3.0 (243 kw)	1993.05-2002.08		Rear	Coupe RWD 2JZGTE	MT,for left-hand drive vehicles	Flexible Coupling	517649
3.0 (250 kw)	2019.03-		Front;Rear	Coupe RWD B58		Flexible Coupling	517955
Tacoma							
2.4 (106 kw)	1995.01-2004.08	4AT	Rear	Pickup RWD 2RZ-FE	Model year from:1997	Propshaft	PS901623
2.7 (118 kw)	2005.01-2015.12	4AT	Front	Pickup 4WD 2TRFE		Propshaft	PS901630
	2005.01-2015.12	5MT	Rear	Pickup 4WD 2TRFE		Propshaft	PS901626
	2015.08-	6AT	Front	Pickup 4WD 2TR-FE		Propshaft	PS901632
3.4 (136 kw)	1994.08-2000.07	5MT	Rear	Pickup 4WD 5VZFE		Propshaft	PS901624
3.5 (207 kw)	2015.08-	6MT	Front	Pickup 4WD 2GR-FKS	Model year to:2017	Propshaft	PS900498
	2015.08-	6AT	Rear	Pickup 4WD 2GR-FKS		Propshaft	PS901631
4.0 (174 kw)	2004.09-2015.12	6MT	Front	Pickup 4WD 1GRFE		Propshaft	PS901625
	2004.09-2015.12	5AT	Rear	Pickup 4WD 1GRFE	Date from:2011.09,Date to:2015.07,For Modelcode:GRN245	Propshaft	PS900499
	2004.09-2015.12	5AT	Rear	Pickup RWD 1GRFE	Wheelbase:3556mm	Propshaft	PS901627
	2004.09-2015.12	5AT	Rear	Pickup RWD 1GRFE	Wheelbase:3226mm	Propshaft	PS901628

	YEAR	TRANSM.	FITTING POSITION	BODY STYLE & DRIVE TYPE & ENGINE	REMARKS	PRODUCT	GSP Ref.
TOYOTA							
Tacoma							
4.0 (174 kw)	2004.09-2015.12	5AT	Rear	Pickup 4WD 1GRFE	Date from:2011.09,Date to:2015.07,For Modelcode:GRN250	Propshaft	PS901629
4.0 (175 kw)	2004.09-2015.07	6MT	Front	Pickup 4WD 1GRFE		Propshaft	PS901625
	2004.09-2015.07	5AT	Rear	Pickup 4WD 1GRFE	Date from:2011.09	Propshaft	PS900499
Tundra							
4.6 (231 kw)	2006.11-	6AT	Front	Pickup 4WD 1URFE		Propshaft	PS900501
4.7 (183 kw)	1999.02-2006.10	5AT	Front	Pickup 4WD 2UZFE	Model year from:2004	Propshaft	PS900500
4.7 (202 kw)	2004.09-2006.11		Rear	Pickup RWD 2UZ-FE		Propshaft	PS901665
	2004.09-2006.11		Rear	Pickup 4WD 2UZ-FE		Propshaft	PS901665
4.7 (207 kw)	1999.02-2006.10	5AT	Front	Pickup 4WD 2UZFE	Date from:2004.08	Propshaft	PS900500
	1999.02-2006.10	AT	Front	Pickup 4WD 2UZFE	Modelcode:UCK40,Date to:2004.07,Modelcode:UCK41,Date from:2003.10,Date to:2004.07	Propshaft	PS901663
	1999.02-2006.10	AT	Rear	Pickup 4WD 2UZFE	For Modelcode:UCK40,Date to:2004.07	Propshaft	PS901664
5.7 (284 kw)	2006.11-	6AT	Front	Pickup 4WD 3URFE		Propshaft	PS900501
	2006.11-	6AT	Rear	Pickup RWD 3URFE	Model year to:2021	Propshaft	PS901633
	2006.11-2013.09	6AT	Front	Pickup 4WD 3URFBE		Propshaft	PS900501
	2012.01-2013.09	6AT	Rear	Pickup RWD 3URFBE	Model year to:2021	Propshaft	PS901633
Vanguard							
3.5 (206 kw)	2005.11-2012.12		Centre	SUV 4WD 2GRFE		Center Bearing Support	539940
Venza							
2.7 (135 kw)	2012.01-2016.11	6AT	Rear	SUV 4WD 1ARFE	Model year from:2009	Propshaft	PS900502
2.7 (136 kw)	2008.11-2016.11	6AT	Rear	SUV 4WD 1ARFE	Model year from:2013,Model year to:2015	Propshaft	PS900502
3.5 (200 kw)	2009.01-2016.11	6AT	Rear	SUV 4WD 2GRFE	Model year to:2012	Propshaft	PS900502
Verossa							
2.0 (118 kw)	2000.10-2003.11		Centre	Saloon RWD 1GFE		Center Bearing Support	539071
Vitz							
1.3 (65 kw)	1999.09-2005.01		Front	Hatchback 4WD 2NZFE	MT	Center Bearing Support	539067
Voxy							
2.0 (112 kw)	2013.10-		Front	MPV 4WD 3ZR-FAE	Date from:2014.01	Center Bearing Support	539067
Will Cypha							
1.5 (78 kw)	2001.05-2005.10		Front	Hatchback 4WD 1NZFE	Date from:2002.09,AT	Center Bearing Support	539067
Will VS							
1.8 (100 kw)	2001.03-2004.04		Centre	Hatchback FWD 1ZZ-FE		Center Bearing Support	539014
	2001.03-2004.04		Centre	Hatchback 4WD 1ZZ-FE		Center Bearing Support	539014
Wish							
1.8 (96 kw)	2012.04-		Front	MPV 4WD 2ZR-FAE		Center Bearing Support	539028
1.8 (98 kw)	2009.04-2012.03		Front	MPV 4WD 2ZR-FAE		Center Bearing Support	539028
TOYOTA (FAW)							
Corolla							
1.8 (93 kw)	2004.02-2007.01		Centre	Saloon FWD 1ZZ-FE		Center Bearing Support	539014
1.8 (100 kw)	2004.02-2007.01		Centre	Saloon FWD 1ZZ-FE		Center Bearing Support	539014
Land Cruiser Prado							
4.0 (202 kw)	2010.06-2015.12	5AT	Front	Closed Off-Road Vehicle 4WD 1GR-FE		Propshaft	PS900466
TOYOTA (GAC)							
Highlander							
2.0 (162 kw)	2015.03-		Front	Closed Off-Road Vehicle 4WD 8AR-FTS	AT,Vehicle Production Country:China	Center Bearing Support	539067
3.5 (201 kw)	2015.03-2018.12		Front	Closed Off-Road Vehicle 4WD 2GR-FE	Date to:2016.11,AT,Vehicle Production Country:China,North America	Center Bearing Support	539067
VAUXHALL							
Mokka							
1.4 (103 kw)	2012.06-	MT	Rear	SUV 4WD A14NET/B14NET		Propshaft	PS900174
1.6 (100 kw)	2015.01-	MT	Rear	SUV 4WD A16DTH/B16DTH		Propshaft	PS900174
1.7 (96 kw)	2012.06-	MT	Rear	SUV 4WD A17DTS		Propshaft	PS900174
Mokka X							
1.4 (103 kw)	2016.06-	MT	Rear	SUV 4WD B14NET/D14NET		Propshaft	PS900174
1.4 (112 kw)	2016.06-	AT	Rear	SUV 4WD B14XFT		Propshaft	PS900174
1.6 (100 kw)	2016.06-	MT	Rear	SUV 4WD B16DTH/D16DTH		Propshaft	PS900174
Movano							
2.3 (74 kw)	2010.05-		Centre	Chassis Cabin FWD M9T670/M9T672/M9T676		Center Bearing Support	539910S
	2010.05-		Centre	Van RWD M9T690/M9T692/M9T890		Center Bearing Support	539910S
	2010.05-		Centre	Bus FWD M9T670/M9T672/M9T676		Center Bearing Support	539910S
	2010.05-		Front	Van RWD M9T690/M9T692/M9T890		Flexible Coupling	533884
	2010.05-2015.05		Centre	Van FWD M9T670/M9T672/M9T676/M9T870		Center Bearing Support	539910S
	2010.07-		Centre	Chassis Cabin RWD M9T690/M9T692/M9T890		Center Bearing Support	539910S
	2010.07-		Front	Chassis Cabin RWD M9T690/M9T692/M9T890		Flexible Coupling	533884
2.3 (81 kw)	2014.05-		Centre	Van FWD M9T704/M9T870		Center Bearing Support	539910S

	YEAR	TRANSM.	FITTING POSITION	BODY STYLE & DRIVE TYPE & ENGINE	REMARKS	PRODUCT	GSP Ref.
VAUXHALL							
Movano							
2.3 (92 kw)	2010.05-		Centre	Chassis Cabin FWD M9T670/M9T672/M9T676/M9T680/M9T870/M9T876/M9T880		Center Bearing Support	539910S
	2010.05-		Centre	Chassis Cabin RWD M9T690/M9T692/M9T890/M9T892/M9T896/M9T898		Center Bearing Support	539910S
	2010.05-		Centre	Van FWD M9T670/M9T672/M9T676/M9T680/M9T880		Center Bearing Support	539910S
	2010.05-		Centre	Van RWD M9T686/M9T690/M9T692/M9T696/M9T698/M9T890/M9T896/M9T898		Center Bearing Support	539910S
	2010.05-		Centre	Bus FWD M9T670/M9T672/M9T676/M9T680		Center Bearing Support	539910S
	2010.05-		Front	Chassis Cabin RWD M9T690/M9T692/M9T890/M9T892/M9T896/M9T898		Flexible Coupling	533884
	2010.05-		Front	Van RWD M9T686/M9T690/M9T692/M9T696/M9T698/M9T890/M9T896/M9T898		Flexible Coupling	533884
2.3 (96 kw)	2016.10-		Centre	Van RWD M9T710		Center Bearing Support	539910S
	2016.10-		Centre	Van FWD M9T704		Center Bearing Support	539910S
	2016.10-		Centre	Chassis Cabin FWD M9T704		Center Bearing Support	539910S
	2016.10-		Centre	Chassis Cabin RWD M9T710		Center Bearing Support	539910S
	2016.10-		Front	Van RWD M9T710		Flexible Coupling	533884
	2016.10-		Front	Chassis Cabin RWD M9T710		Flexible Coupling	533884
2.3 (100 kw)	2014.05-		Centre	Bus FWD M9T702		Center Bearing Support	539910S
	2014.05-		Centre	Chassis Cabin FWD M9T702/M9T716		Center Bearing Support	539910S
	2014.05-		Centre	Chassis Cabin RWD M9T700		Center Bearing Support	539910S
	2014.05-		Centre	Van FWD M9T702/M9T716		Center Bearing Support	539910S
	2014.05-		Centre	Van RWD M9T700		Center Bearing Support	539910S
	2014.05-		Front	Chassis Cabin RWD M9T700		Flexible Coupling	533884
	2014.05-		Front	Van RWD M9T700		Flexible Coupling	533884
2.3 (107 kw)	2010.03-		Centre	Van FWD M9T678/M9T680/M9T706/M9T708/M9T880		Center Bearing Support	539910S
	2010.05-		Centre	Chassis Cabin FWD M9T678/M9T680/M9T706/M9T708/M9T878/M9T880		Center Bearing Support	539910S
	2010.05-		Centre	Van RWD M9T694/M9T696/M9T698/M9T710/M9T896		Center Bearing Support	539910S
	2010.05-		Centre	Bus FWD M9T678/M9T680/M9T706		Center Bearing Support	539910S
	2010.05-		Front	Van RWD M9T694/M9T696/M9T698/M9T710/M9T896		Flexible Coupling	533884
	2010.07-		Centre	Chassis Cabin RWD M9T694/M9T696/M9T698/M9T710/M9T896/M9T898		Center Bearing Support	539910S
	2010.07-		Front	Chassis Cabin RWD M9T694/M9T696/M9T698/M9T710/M9T896/M9T898		Flexible Coupling	533884
2.3 (110 kw)	2010.05-		Centre	Chassis Cabin RWD M9T898		Center Bearing Support	539910S
	2010.05-		Front	Chassis Cabin RWD M9T898		Flexible Coupling	533884
	2019.08-		Centre	Chassis Cabin FWD M9T716		Center Bearing Support	539910S
	2019.08-		Centre	Van FWD M9T716		Center Bearing Support	539910S
2.3 (120 kw)	2014.05-		Centre	Bus FWD M9T702/M9T708		Center Bearing Support	539910S
	2014.05-		Centre	Van RWD M9T700/M9T710		Center Bearing Support	539910S
	2014.05-		Front	Van RWD M9T700/M9T710		Flexible Coupling	533884
	2014.07-		Centre	Chassis Cabin RWD M9T700/M9T710		Center Bearing Support	539910S
	2014.07-		Front	Chassis Cabin RWD M9T700/M9T710		Flexible Coupling	533884
2.3 (125 kw)	2015.05-		Centre	Bus FWD M9T706		Center Bearing Support	539910S
	2016.11-		Centre	Chassis Cabin FWD M9T706		Center Bearing Support	539910S
	2016.11-		Centre	Van FWD M9T706		Center Bearing Support	539910S
2.3 (132 kw)	2019.08-		Centre	Chassis Cabin FWD M9T716		Center Bearing Support	539910S
	2019.08-		Centre	Van FWD M9T716		Center Bearing Support	539910S
Omega							
2.0 (85 kw)	1994.03-1999.09		Front	Estate RWD X20SE		Flexible Coupling	510641
	1994.03-1999.09		Front	Estate RWD X20SE		Flexible Coupling Kit	510641S
2.0 (100 kw)	1994.03-2001.02		Front	Estate RWD X20XEV		Flexible Coupling	510641
	1994.03-2001.02		Front	Estate RWD X20XEV		Flexible Coupling Kit	510641S
	1994.06-1999.05		Front	Saloon RWD X20XEV		Flexible Coupling	510641
	1994.06-1999.05		Front	Saloon RWD X20XEV		Flexible Coupling Kit	510641S
Omega B							
2.0 (85 kw)	1994.03-1999.09		Front	Saloon RWD 20 SE, X 20 SE		Flexible Coupling	510641
	1994.03-1999.09		Front	Saloon RWD 20 SE, X 20 SE		Flexible Coupling Kit	510641S
	1995.09-1996.09		Front	Saloon RWD 20 SE, X 20 SE		Flexible Coupling	510641
	1995.09-1996.09		Front	Saloon RWD 20 SE, X 20 SE		Flexible Coupling Kit	510641S
VOLVO							
360							
2.0 (75 kw)	1984.08-1990.07	MT	-	Saloon RWD B200KO		Joint,propshaft	699050
2.0 (80 kw)	1988.08-1989.08	MT	-	Hatchback RWD B200F		Joint,propshaft	699050
2.0 (82 kw)	1986.08-1988.07	MT	-	Saloon RWD B200EA		Joint,propshaft	699050
940							
2.0 (102 kw)	1994.10-1997.05		Front	Saloon RWD B 204 FT	MT	Flexible Coupling	537625
	1994.10-1997.05		Front	Saloon RWD B 204 FT	MT	Flexible Coupling Kit	510596S
2.0 (114 kw)	1996.04-1998.10		Front	Saloon RWD B 200 FT		Flexible Coupling	510596
2.0 (139 kw)	1994.10-1997.05		Front	Saloon RWD B200GT		Flexible Coupling	510596

	YEAR	TRANSM.	FITTING POSITION	BODY STYLE & DRIVE TYPE & ENGINE	REMARKS	PRODUCT	GSP Ref.
VOLVO							
940							
2.3 (85 kw)	1994.08-1995.07		Front	Saloon RWD B 230 FD		Flexible Coupling	510596
2.3 (96 kw)	1994.08-1998.10		Front	Saloon RWD B 230 FB		Flexible Coupling	510596
2.3 (99 kw)	1995.01-1998.10		Front	Saloon RWD B230FK		Flexible Coupling	510596
2.3 (121 kw)	1994.08-1998.10		Front	Saloon RWD B 230 FT (08.94-.)	537625 and 510596 different structure;MT	Flexible Coupling	537625
	1994.08-1998.10		Front	Saloon RWD B 230 FT (08.94-.)	MT	Flexible Coupling Kit	510596S
2.4 (90 kw)	1994.08-1998.10		Front	Saloon RWD D 24 TIC (08.94-.)	510596 and 537625 different structure	Flexible Coupling	510596
	1994.08-1998.10		Front	Saloon RWD D 24 TIC (08.94-.)	537625 and 510596 different structure;MT	Flexible Coupling	537625
	1994.08-1998.10		Front	Saloon RWD D 24 TIC (08.94-.)	MT	Flexible Coupling Kit	510596S
940 Estate							
2.3 (85 kw)	1994.08-1995.07		Front	Estate RWD B 230 FD		Flexible Coupling	510596
2.3 (96 kw)	1994.08-1998.10		Front	Estate RWD B 230 FB		Flexible Coupling	510596
2.3 (121 kw)	1994.08-1998.10		Front	Estate RWD B 230 FT (08.94-.)	MT	Flexible Coupling	537625
	1994.08-1998.10		Front	Estate RWD B 230 FT (08.94-.)	MT	Flexible Coupling Kit	510596S
2.4 (90 kw)	1994.08-1998.10		Front	Estate RWD D 24 TIC (08.94-.)	510596 and 537625 different structure	Flexible Coupling	510596
	1994.08-1998.10		Front	Estate RWD D 24 TIC (08.94-.)	537625 and 510596 different structure;MT	Flexible Coupling	537625
	1994.08-1998.10		Front	Estate RWD D 24 TIC (08.94-.)	MT	Flexible Coupling Kit	510596S
940 Estate/Combi							
2.3 (99 kw)	1995.01-1998.10		Front	Estate RWD B230FK		Flexible Coupling	510596
2.3 (126 kw)	1995.08-1998.10		Front	Estate RWD B230FT	MT	Flexible Coupling	537625
	1995.08-1998.10		Front	Estate RWD B230FT	MT	Flexible Coupling Kit	510596S
2.4 (60 kw)	1990.08-1995.07		Front	Estate RWD D24		Flexible Coupling	510596
940 Kombi							
2.0 (114 kw)	1991.01-1995.07		Front	Estate RWD B 200 FT		Flexible Coupling	510596
S40							
2.5 (162 kw)	2004.04-2008.12	AT/MT	Front	Saloon 4WD B5254T3		Joint,propshaft	635008
2.5 (169 kw)	2007.04-2012.05	AT/MT	Front	Saloon 4WD B5254T7		Joint,propshaft	635008
S60							
2.4 (147 kw)	2001.01-2010.04	5AT	Rear	Saloon 4WD B5244T3	Model year from:2003;for OE No.:31256270	Propshaft	PS900508
	2001.01-2010.04	5AT	Rear	Saloon 4WD B5244T3	For Model year:2002	Propshaft	PS901426
	2001.01-2010.04	AT/MT	Front	Saloon 4WD B5244T3	Date from:2002.01	Joint,propshaft	635008
2.4 (158 kw)	2011.06-2016.12	AT	Rear	Saloon 4WD D5244T15	Date from:2013.01,Trans. code:TF-80SC	Propshaft	PS900516
2.4 (169 kw)	2014.04-2015.12	AT	Rear	Saloon 4WD D5244T15	Trans. code:TF-80SC	Propshaft	PS900516
2.5 (154 kw)	2002.06-2010.03	5AT	Rear	Saloon 4WD B5254T2		Propshaft	PS900508
	2002.06-2010.03	AT/MT	Front	Saloon 4WD B5254T2		Joint,propshaft	635008
2.5 (221 kw)	2003.03-2007.12	AT/MT	Front	Saloon 4WD B5254T4		Joint,propshaft	635008
3.0 (224 kw)	2010.04-2016.12	AT	Rear	Saloon 4WD B6304T4	Model year from:2011,Model year to:2012	Propshaft	PS900513
	2010.04-2016.12	AT	Rear	Saloon 4WD B6304T4	Date from:2013.01,Trans. code:TF-80SC	Propshaft	PS900516
3.0 (242 kw)	2010.09-2015.12	AT	Rear	Saloon 4WD B6304T4	Trans. code:TF-80SC	Propshaft	PS900516
3.0 (258 kw)	2014.05-2018.12	AT	Rear	Saloon 4WD B6304T5	Trans. code:TF-80SC	Propshaft	PS900516
S70							
2.3 (184 kw)	1997.07-2000.09		Rear	Saloon 4WD B 5234 T4	For Model year:1999	Propshaft	PS900504
2.4 (103 kw)	1999.04-2000.09	AT/MT	Rear	Saloon 4WD B5244S2	For Model year:1999	Propshaft	PS900504
	1999.04-2000.11		Front	Saloon FWD B5244S2		Joint,propshaft	699195
2.4 (106 kw)	1996.11-1999.05	AT	Rear	Saloon 4WD B5252FS	For Model year:1999	Propshaft	PS900504
2.4 (121 kw)	1998.10-1999.05	AT/MT	Rear	Saloon 4WD B5254SDENS	For Model year:1999	Propshaft	PS900504
2.4 (125 kw)	1999.04-2000.09	MT	Rear	Saloon 4WD B5244S	For Model year:1999	Propshaft	PS900504
2.4 (142 kw)	1996.11-1999.04	AT/MT	Rear	Saloon 4WD B5254T	For Model year:1999	Propshaft	PS900504
S80							
3.0 (210 kw)	2007.01-2010.12	AT	Rear	Saloon 4WD B6304T2	Model year from:2009	Propshaft	PS900511
	2007.01-2010.12	AT	Rear	Saloon 4WD B6304T2	For Model year:2008	Propshaft	PS900512
3.0 (224 kw)	2011.01-2015.12	AT	Rear	Saloon 4WD B6304T4	Model year to:2012	Propshaft	PS900511
3.2 (175 kw)	2006.10-2010.03	AT	Rear	Saloon 4WD B6324S	Model year from:2009	Propshaft	PS900511
	2006.10-2010.03	AT	Rear	Saloon 4WD B6324S	Model year to:2008	Propshaft	PS900512
3.2 (179 kw)	2010.09-2014.12	AT	Rear	Saloon 4WD B6324S5		Propshaft	PS900511
4.4 (232 kw)	2006.08-2012.03	AT	Rear	Saloon 4WD B8444S	Model year from:2009,Model year to:2010	Propshaft	PS900511
	2006.08-2012.03	AT	Rear	Saloon 4WD B8444S	Model year from:2007,Model year to:2008	Propshaft	PS900512
	2006.08-2012.03		Front	Saloon 4WD B8444S		Joint,propshaft	699195
S90							
2.0 (228 kw)	2017.10-2021.12	8AT	Rear	Saloon 4WD B4204T29	Model year to:2018	Propshaft	PS901918
2.0 (235 kw)	2016.03-2021.12	8AT	Rear	Saloon 4WD B4204T27	Model year from:2017,Model year to:2018	Propshaft	PS901918
V50							
2.4 (125 kw)	2006.08-2010.09	5MT/SAT	Rear	Estate 4WD B5244S4		Propshaft	PS901427
2.5 (162 kw)	2004.05-2008.12	AT/MT	Front	Estate 4WD B5254T3		Joint,propshaft	635008

	YEAR	TRANSM.	FITTING POSITION	BODY STYLE & DRIVE TYPE & ENGINE	REMARKS	PRODUCT	GSP Ref.
VOLVO							
V60							
2.4 (120 kw)	2012.09-2015.12	AT	Rear	Estate 4WD D5244T17	Date from:2012.09 to 2015.12,Trans. code:TF-80SC	Propshaft	PS900516
2.4 (133 kw)	2013.09-2015.12	AT	Rear	Combi Van 4WD D5244T12	Trans. code:TF-80SC	Propshaft	PS900516
	2013.10-2015.12	AT	Rear	Estate 4WD D5244T12	Trans. code:TF-80SC	Propshaft	PS900516
2.4 (158 kw)	2011.06-2015.12	AT	Rear	Estate 4WD D5244T15	Chassis no. from:90001,Transm.Type:TF-80SC	Propshaft	PS900516
2.4 (169 kw)	2014.04-2015.12	AT	Rear	Estate 4WD D5244T15	Trans. code:TF-80SC	Propshaft	PS900516
3.0 (224 kw)	2010.11-2015.12	AT	Rear	Estate 4WD B6304T4	Date from:2010.11,Chassis no. from:90001,Trans. code:TF-80SC	Propshaft	PS900516
3.0 (242 kw)	2014.04-2015.12	AT	Rear	Estate 4WD B6304T4	Trans. code:TF-80SC	Propshaft	PS900516
3.0 (258 kw)	2014.05-2018.05	AT	Rear	Estate 4WD B6304T5		Propshaft	PS900516
V70							
2.0 (166 kw)	1996.11-2000.02	AT/MT	Front	Estate 4WD B5204T3	Date to:1999.12	Joint,propshaft	635008
2.3 (176 kw)	1997.01-1999.03	AT/MT	-	Estate 4WD B5234T3		Joint,propshaft	635008
2.3 (184 kw)	1997.04-2000.03	AT/MT	Front	Estate 4WD B5234T4/B5234T6		Joint,propshaft	635008
2.3 (195 kw)	1998.12-2000.02	AT	Rear	Estate 4WD B5234T8	For Model year:1999	Propshaft	PS900504
	2000.10-2004.09	AT	Rear	Estate 4WD B 5234 T7, B 5234 T8	Model year from:2003	Propshaft	PS900506
	2000.10-2004.09	AT	Rear	Estate 4WD B 5234 T7, B 5234 T8	Model year from:2001,Model year to:2002	Propshaft	PS900510
	2000.10-2004.09		Front	Estate 4WD B 5234 T7, B 5234 T8		Joint,propshaft	699195
2.4 (103 kw)	2000.03-2007.08		Front	Estate FWD B5244S2		Joint,propshaft	699195
2.4 (120 kw)	2012.09-2015.12		Centre	Estate 4WD D5244T17		Center Bearing Support	539913
2.4 (121 kw)	1998.10-1999.05	AT/MT	Rear	Estate 4WD B5254SDENS	For Model year:1999	Propshaft	PS900504
	2000.03-2003.09	AT	Rear	Estate 4WD B 5254 S	For Model year:2003	Propshaft	PS900506
	2000.03-2003.09	AT	Rear	Estate 4WD B 5254 S	Model year from:2001,Model year to:2002	Propshaft	PS900510
	2000.03-2003.09		Front	Estate FWD B 5254 S		Joint,propshaft	699195
2.4 (133 kw)	2013.10-2016.04		Centre	Estate 4WD D5244T12		Center Bearing Support	539913
2.4 (136 kw)	2005.05-2007.08	AT/MT	Rear	Estate 4WD D5244T4		Propshaft	PS900509
	2007.10-2010.03		Centre	Estate 4WD D5244T4		Center Bearing Support	539913
2.4 (142 kw)	1997.01-2000.05	AT/MT	Front	Estate 4WD B5244T/B5254T	Date from:1997.01	Joint,propshaft	635008
2.4 (151 kw)	2009.05-2012.11		Centre	Estate 4WD D5244T10		Center Bearing Support	539913
2.4 (158 kw)	2011.06-2015.12		Centre	Estate 4WD D5244T15		Center Bearing Support	539913
2.5 (154 kw)	2002.08-2007.08	AT	Rear	Estate 4WD B5254T2	Model year from:2003	Propshaft	PS900506
	2002.08-2007.08	AT/MT	Front	Estate 4WD B5254T2		Joint,propshaft	635008
2.5 (155 kw)	2003.01-2006.12	AT	Rear	Estate 4WD B5254T2	Model year from:2003	Propshaft	PS900506
2.5 (221 kw)	2002.12-2007.08	AT/MT	Front	Estate 4WD B5254T4		Joint,propshaft	635008
3.0 (224 kw)	2011.05-2015.12		Centre	Estate 4WD B6304T4		Center Bearing Support	539913
3.2 (179 kw)	2010.05-2015.12		Centre	Estate 4WD B6324S5		Center Bearing Support	539913
V70 XC							
2.4 (142 kw)	1997.11-2002.09	AT/MT	-	Estate 4WD B5244T/B5254T		Joint,propshaft	635008
2.4 (147 kw)	2000.03-2002.09	AT/MT	Rear	Estate 4WD B5244T3		Propshaft	PS900510
	2000.03-2002.09	AT/MT	Front	Estate 4WD B5244T3		Joint,propshaft	635008
V90							
2.0 (228 kw)	2017.10-2021.12	8AT	Rear	Estate 4WD B4204T29		Propshaft	PS901918
V90 Cross Country							
2.0 (183 kw)	2016.03-2021.12	8AT	Rear	Estate 4WD B4204T20	Model year from:2018,Model year to:2019	Propshaft	PS901918
2.0 (184 kw)	2017.10-	8AT	Rear	Estate 4WD B4204T26	Model year from:2018,Model year to:2019	Propshaft	PS901918
2.0 (220 kw)	2020.03-	8AT	Rear	Estate 4WD B420T	for Model year:2022	Propshaft	PS901918
2.0 (228 kw)	2017.10-	8AT	Rear	Estate 4WD B4204T29	Model year to:2021	Propshaft	PS901918
2.0 (235 kw)	2016.10-	8AT	Rear	Estate 4WD B4204T27	Model year to:2021	Propshaft	PS901918
XC60							
2.0 (187 kw)	2017.03-2018.12	AT	Rear	SUV 4WD B4204T23		Propshaft	PS900619
	2017.03-2018.12	AT	-	SUV 4WD B4204T23		Joint,propshaft	602051
2.0 (220 kw)	2020.03-	AT	Rear	SUV 4WD B420T		Propshaft	PS900619
	2020.03-	AT	-	SUV 4WD B420T		Joint,propshaft	602051
2.0 (246 kw)	2017.03-2022.12	8AT	Rear	SUV 4WD B4204T35/B4204T49	Model year from:2018,Model year to:2020	Propshaft	PS901729
2.0 (287 kw)	2018.02-2022.12	8AT	Rear	SUV 4WD B4204T34	Model year to:2020	Propshaft	PS901729
2.0 (298 kw)	2017.09-2022.12	8AT	Rear	SUV 4WD B4204T28/B4204T34/B4204T48/B4204T57	Model year from:2018,Model year to:2020	Propshaft	PS901729
2.0 (299 kw)	2017.03-2022.12	8AT	Rear	SUV 4WD B4204T35	Model year from:2018,Model year to:2020	Propshaft	PS901729
2.4 (120 kw)	2009.05-2017.02	AT/MT	Rear	SUV 4WD D5244T16/D5244T17	Date from:2009.05,Chassis no. from:365000,For Engine Code:D 5244 T17,Trans. code:M66,TF-80SC	Propshaft	PS900516
2.4 (133 kw)	2013.10-2017.02	AT/MT	Rear	SUV 4WD D5244T12	Trans. code:M66,TF-80SC	Propshaft	PS900516
2.4 (158 kw)	2011.06-2017.02	AT/MT	Rear	SUV 4WD D5244T11/D5244T15	Chassis no. from:365000,For Engine Code:D 5244 T11,Trans. code:M66	Propshaft	PS900516
3.0 (224 kw)	2009.03-2017.02	AT	Rear	SUV 4WD B6304T4	Chassis no. to:364999;for OE No.:30651997	Propshaft	PS900513
	2009.03-2017.02	AT	Rear	SUV 4WD B6304T4	Chassis no. from:365000,Trans. code:TF-80SC;for OE No.:31325194	Propshaft	PS900516
	2009.03-2017.02	AT	Rear	SUV 4WD B6304T4	Model year from:2013,Model yeat to:2015;for OE No.:31492432	Propshaft	PS900621
	2009.03-2017.02	AT	-	SUV 4WD B6304T4	Model year from:2013,Model yeat to:2015	Joint,propshaft	602455
	2009.03-2017.02		Rear	SUV 4WD B6304T4		Center Bearing Support	539922

	YEAR	TRANSM.	FITTING POSITION	BODY STYLE & DRIVE TYPE & ENGINE	REMARKS	PRODUCT	GSP Ref.
VOLVO							
XC60							
3.0 (242 kw)	2014.04-2015.12		Rear	SUV 4WD B6304T4	Trans. code:TF-80SC	Propshaft	PS900516
3.2 (171 kw)	2010.09-2015.12	AT	Rear	SUV 4WD B6324S4	Model year to:2012	Propshaft	PS900513
3.2 (179 kw)	2010.04-2017.02	AT	Rear	SUV 4WD B6324S5	Chassis no. from:365000,Trans. code:TF-80SC	Propshaft	PS900516
XC70							
2.4 (120 kw)	2002.09-2007.08	AT/MT	Front	Estate 4WD D5244T		Joint,propshaft	635008
2.4 (136 kw)	2005.05-2008.04	AT/MT	Rear	Estate 4WD D5244T4		Propshaft	PS900509
2.5 (154 kw)	2002.06-2007.10	AT/MT	Front	Estate 4WD B5254T2		Joint,propshaft	635008
XC90							
2.0 (140 kw)	2015.10-2018.12	AT	Rear	SUV 4WD D4204T6	Chassis no. to:174564,Date from:2016.01	Propshaft	PS900517
2.0 (165 kw)	2014.09-2016.12	AT	Rear	SUV 4WD D4204T11	Date from:2015.01	Propshaft	PS900517
2.0 (173 kw)	2016.03-2019.12	AT	Rear	SUV 4WD D4204T23	Chassis no. to:174564	Propshaft	PS900517
	2016.03-2019.12	AT	Rear	SUV 4WD D4204T23	Chassis no. from:174565	Propshaft	PS900628
2.0 (183 kw)	2016.02-2018.12	AT	Rear	SUV 4WD B4204T20	Chassis no. to:174564	Propshaft	PS900517
2.0 (187 kw)	2015.06-2018.12	AT	Rear	SUV 4WD B4204T23	Chassis no. to:174564,Date from:2016.01	Propshaft	PS900517
	2015.06-2018.12	AT	Rear	SUV 4WD B4204T23	Chassis no. from:174565,Date from:2016.01	Propshaft	PS900628
2.0 (228 kw)	2017.10-2021.12	AT	Rear	SUV 4WD B4204T29	Model year to:2023	Propshaft	PS900628
2.0 (235 kw)	2014.09-2018.12	AT	Rear	SUV 4WD B4204T27	Chassis no. to:174564	Propshaft	PS900517
	2014.09-2018.12	AT	Rear	SUV 4WD B4204T27	Chassis no. from:174565	Propshaft	PS900628
2.4 (120 kw)	2002.06-2014.12	AT/MT	Front	SUV 4WD D5244T/D5244T5		Joint,propshaft	602148
	2010.10-2014.12	AT/MT	Front	SUV FWD D5244T5	Date to:2013.12	Joint,propshaft	635008
2.4 (147 kw)	2010.11-2014.12	AT	Front	SUV 4WD D5244T18	Date to:2013.12	Joint,propshaft	635008
2.5 (154 kw)	2002.06-2014.12	AT	Rear	SUV 4WD B5254T2	Chassis no. to:524230	Propshaft	PS901662
	2002.06-2014.12	AT/MT	Rear	SUV 4WD B5254T2	Chassis no. from:524231,Chassis no. to:650000	Propshaft	PS900515
	2002.06-2014.12	AT/MT	Front	SUV 4WD B5254T2	Date to:2007.12	Joint,propshaft	602148
2.9 (200 kw)	2002.06-2005.08	AT	Rear	SUV 4WD B6294T	Model year from:2003,Model year to:2005	Propshaft	PS900514
	2002.06-2005.08	AT/MT	Front	SUV 4WD B6294T		Joint,propshaft	635008
3.2 (175 kw)	2006.04-2014.12	6AT	Rear	SUV 4WD B6324S	Model year from:2009	Propshaft	PS901425
	2006.04-2014.12	AT	Rear	SUV 4WD B6324S	Model year from:2007,Model year to:2008	Propshaft	PS900507
	2006.04-2014.12	AT/MT	Front	SUV 4WD B6324S		Joint,propshaft	635008
	2011.09-2014.12	6AT	Front	SUV FWD B6324S5		Joint,propshaft	699195
3.2 (179 kw)	2011.04-2014.12	6AT	Rear	SUV 4WD B6324S5	Model year to:2011,Chassis no. to:593214	Propshaft	PS901425
	2011.04-2014.12	AT	Rear	SUV 4WD B6324S5	Model year from:2011,Model year to:2013,Chassis no. from:593215	Propshaft	PS900505
	2011.04-2014.12	AT/MT	Front	SUV 4WD B6324S5		Joint,propshaft	635008
4.4 (232 kw)	2005.01-2010.12	AT	Rear	SUV 4WD B8444S	Model year to:2008	Propshaft	PS900507
	2005.01-2010.12	AT/MT	Front	SUV 4WD B8444S	Date to:2007.12	Joint,propshaft	635008
VOLVO ASIA							
XC40							
2.0 (140 kw)	2019.05-		Rear	SUV 4WD B4204T47, B4204T51 (07.20-.)		Propshaft	PS900624
	2019.05-		-	SUV 4WD B4204T47, B4204T51 (07.20-.)		Joint,propshaft	602455
2.0 (185 kw)	2019.05-		Rear	SUV 4WD B4204T18		Propshaft	PS900624
	2019.05-		-	SUV 4WD B4204T18		Joint,propshaft	602455
XC60							
2.0 (157 kw)	2014.11-2017.12	AT	Rear	SUV 4WD B 5204 T9	Model year from:2015,Model yeat to:2016	Propshaft	PS900621
	2014.11-2017.12	AT	-	SUV 4WD B 5204 T9	Model year from:2015,Model yeat to:2016	Joint,propshaft	602455
	2014.11-2017.12		Rear	SUV 4WD B 5204 T9		Center Bearing Support	539922
2.5 (187 kw)	2014.11-2017.12	AT	Rear	SUV 4WD B 5254 T12	Model year from:2015,Model yeat to:2016	Propshaft	PS900621
	2014.11-2017.12	AT	-	SUV 4WD B 5254 T12	Model year from:2015,Model yeat to:2016	Joint,propshaft	602455
	2014.11-2017.12		Rear	SUV 4WD B 5254 T12		Center Bearing Support	539922
VW							
Amarok							
2.0 (90 kw)	2010.09-2013.10	MT	Front	Pickup 4WD CDBA/CNFA		Propshaft	PS900614
	2010.09-2013.10	MT	Rear	Pickup 4WD CDBA/CNFA		Propshaft	PS901348
	2010.09-2013.10	MT	Rear	Pickup RWD CDBA/CNFA		Propshaft	PS901348
	2010.09-2013.10		Centre	Pickup 4WD CDBA/CNFA		Center Bearing Support	539900
	2010.09-2013.10		Centre	Pickup RWD CDBA/CNFA		Center Bearing Support	539900
	2012.05-2013.10	MT	Rear	Chassis Cabin RWD CDBA/CNFA		Propshaft	PS901348
	2012.05-2013.10		Centre	Chassis Cabin RWD CDBA/CNFA		Center Bearing Support	539900
2.0 (103 kw)	2012.05-2022.05	MT	Front	Pickup 4WD CNFB		Propshaft	PS900614
	2012.05-2022.05	MT	Rear	Pickup 4WD CNFB		Propshaft	PS900573
	2012.05-2022.05		Centre	Pickup 4WD CNFB		Center Bearing Support	539900
	2012.06-2016.10	MT	Front	Chassis Cabin 4WD CNFB		Propshaft	PS900614
	2012.06-2016.10	MT	Rear	Chassis Cabin 4WD CNFB		Propshaft	PS901348
	2012.06-2016.10	MT	Rear	Chassis Cabin RWD CNFB		Propshaft	PS901348
	2012.06-2016.10		Centre	Chassis Cabin 4WD CNFB		Center Bearing Support	539900

	YEAR	TRANSM.	FITTING POSITION	BODY STYLE & DRIVE TYPE & ENGINE	REMARKS	PRODUCT	GSP Ref.
VW							
Amarok							
2.0 (103 kw)	2012.06-2016.10		Centre	Chassis Cabin RWD CNFB		Center Bearing Support	539900
	2012.06-2022.05		Centre	Pickup RWD CNFB		Center Bearing Support	539900
2.0 (118 kw)	2010.12-2016.10	MT	Rear	Pickup RWD CFPA		Propshaft	PS901348
	2010.12-2016.10		Centre	Pickup RWD CFPA		Center Bearing Support	539900
	2010.12-2016.10		Rear	Pickup RWD CFPA		Flexible Coupling	517957
	2010.12-2016.10		Rear	Pickup RWD CFPA		Flexible Coupling Kit	517957S
	2011.09-2016.10	MT	Rear	Platform/Chassis RWD CFPA		Propshaft	PS901348
2.0 (120 kw)	2009.11-2012.08	MT	Front	Pickup 4WD CDCA		Propshaft	PS900614
	2009.11-2012.08	MT	Rear	Pickup 4WD CDCA	for OE No.:2H0521102F	Propshaft	PS900573
	2009.11-2012.08	MT	Rear	Pickup 4WD CDCA	for OE No.:2H0521102D	Propshaft	PS901348
	2009.11-2012.08	MT	Rear	Pickup RWD CDCA		Propshaft	PS901348
	2009.11-2012.08		Centre	Pickup 4WD CDCA		Center Bearing Support	539900
	2009.11-2012.08		Centre	Pickup RWD CDCA		Center Bearing Support	539900
	2011.09-2012.08	MT	Rear	Platform/Chassis RWD CDCA		Propshaft	PS901348
	2011.09-2012.08	MT	Rear	Platform/Chassis 4WD CDCA		Propshaft	PS901348
2.0 (132 kw)	2011.11-2022.05		Front	Pickup 4WD CNEA/CSHA		Propshaft	PS900614
	2011.11-2022.05		Centre	Pickup 4WD CNEA/CSHA		Center Bearing Support	539900
	2011.11-2022.05		Centre	Pickup RWD CNEA/CSHA		Center Bearing Support	539900
	2012.05-2016.10		Front	Chassis Cabin 4WD CNEA/CSHA		Propshaft	PS900614
	2012.05-2016.10		Centre	Chassis Cabin 4WD CNEA/CSHA		Center Bearing Support	539900
	2012.05-2016.10		Centre	Chassis Cabin RWD CNEA/CSHA		Center Bearing Support	539900
3.0 (120 kw)	2016.06-2020.06	MT	Front	Pickup 4WD DDXA		Propshaft	PS900614
3.0 (150 kw)	2016.06-2020.08		Front	Pickup 4WD DDXB		Propshaft	PS900614
	2016.06-2020.08	AT	Front	Chassis Cabin 4WD DDXB		Propshaft	PS900614
3.0 (165 kw)	2016.06-2022.05	AT	Front	Pickup 4WD DDXC		Propshaft	PS900614
	2016.06-2022.05		Centre	Pickup 4WD DDXC		Center Bearing Support	539900
3.0 (190 kw)	2018.05-2022.05	AT	Front	Pickup 4WD DDXE		Propshaft	PS900614
	2018.05-2022.05	AT	Front	Chassis Cabin 4WD DDXE		Propshaft	PS900614
	2018.05-2022.05		Centre	Pickup 4WD DDXE		Center Bearing Support	539900
	2018.05-2022.05		Centre	Chassis Cabin 4WD DDXE		Center Bearing Support	539900
Arteon							
2.0 (140 kw)	2017.05-		Front	Hatchback 4WD DFHA		Flexible Coupling	537626
	2017.05-		Rear	Hatchback 4WD DFHA		Flexible Coupling	533882
	2017.05-		Front	Hatchback 4WD DFHA		Flexible Coupling Kit	537626S
	2017.05-		Rear	Hatchback 4WD DFHA		Flexible Coupling Kit	533882S
2.0 (147 kw)	2020.09-		Front	Hatchback 4WD DTUA		Flexible Coupling	537626
	2020.09-		Rear	Hatchback 4WD DTUA		Flexible Coupling	533882
	2020.09-		Front	Hatchback 4WD DTUA		Flexible Coupling Kit	537626S
	2020.09-		Rear	Hatchback 4WD DTUA		Flexible Coupling Kit	533882S
2.0 (176 kw)	2017.03-2020.07		Front	Hatchback 4WD CUAA		Flexible Coupling	537626
	2017.03-2020.07		Rear	Hatchback 4WD CUAA		Flexible Coupling	533882
	2017.03-2020.07		Front	Hatchback 4WD CUAA		Flexible Coupling Kit	537626S
	2017.03-2020.07		Rear	Hatchback 4WD CUAA		Flexible Coupling Kit	533882S
2.0 (200 kw)	2018.04-		Front	Hatchback 4WD DLRB/DNUA		Flexible Coupling	537626
	2018.04-		Rear	Hatchback 4WD DLRB/DNUA		Flexible Coupling	533882
	2018.04-		Front	Hatchback 4WD DLRB/DNUA		Flexible Coupling Kit	537626S
	2018.04-		Rear	Hatchback 4WD DLRB/DNUA		Flexible Coupling Kit	533882S
2.0 (206 kw)	2017.04-		Front	Hatchback 4WD DJHC/DNFE		Flexible Coupling	537626
	2017.04-		Rear	Hatchback 4WD DJHC/DNFE		Flexible Coupling	533882
	2017.04-		Front	Hatchback 4WD DJHC/DNFE		Flexible Coupling Kit	537626S
	2017.04-		Rear	Hatchback 4WD DJHC/DNFE		Flexible Coupling Kit	533882S
2.0 (235 kw)	2020.11-		Front	Hatchback 4WD DNFG		Flexible Coupling	537626
	2020.11-		Rear	Hatchback 4WD DNFG		Flexible Coupling	533882
	2020.11-		Front	Hatchback 4WD DNFG		Flexible Coupling Kit	537626S
	2020.11-		Rear	Hatchback 4WD DNFG		Flexible Coupling Kit	533882S
Arteon Shooting Brake							
2.0 (140 kw)	2020.09-		Front	Estate 4WD DFHA		Flexible Coupling	537626
	2020.09-		Rear	Estate 4WD DFHA		Flexible Coupling	533882
	2020.09-		Front	Estate 4WD DFHA		Flexible Coupling Kit	537626S
	2020.09-		Rear	Estate 4WD DFHA		Flexible Coupling Kit	533882S
2.0 (147 kw)	2020.09-		Front	Estate 4WD DTUA		Flexible Coupling	537626
	2020.09-		Rear	Estate 4WD DTUA		Flexible Coupling	533882
	2020.09-		Front	Estate 4WD DTUA		Flexible Coupling Kit	537626S
	2020.09-		Rear	Estate 4WD DTUA		Flexible Coupling Kit	533882S

	YEAR	TRANSM.	FITTING POSITION	BODY STYLE & DRIVE TYPE & ENGINE	REMARKS	PRODUCT	GSP Ref.
VW							
Arteon Shooting Brake							
2.0 (200 kw)	2020.06-		Front	Estate 4WD DNUA		Flexible Coupling	537626
	2020.06-		Rear	Estate 4WD DNUA		Flexible Coupling	533882
	2020.06-		Front	Estate 4WD DNUA		Flexible Coupling Kit	537626S
	2020.06-		Rear	Estate 4WD DNUA		Flexible Coupling Kit	533882S
2.0 (206 kw)	2020.06-		Front	Estate 4WD DJHC/DNFE		Flexible Coupling	537626
	2020.06-		Rear	Estate 4WD DJHC/DNFE		Flexible Coupling	533882
	2020.06-		Front	Estate 4WD DJHC/DNFE		Flexible Coupling Kit	537626S
	2020.06-		Rear	Estate 4WD DJHC/DNFE		Flexible Coupling Kit	533882S
2.0 (235 kw)	2020.11-		Front	Estate 4WD DNFG		Flexible Coupling	537626
	2020.11-		Rear	Estate 4WD DNFG		Flexible Coupling	533882
	2020.11-		Front	Estate 4WD DNFG		Flexible Coupling Kit	537626S
	2020.11-		Rear	Estate 4WD DNFG		Flexible Coupling Kit	533882S
Bora							
1.8 (92 kw)	1999.02-2000.10		Front	Saloon 4WD AGN	6MT	Flexible Coupling	537626
	1999.02-2000.10		Front	Saloon 4WD AGN	5MT	Flexible Coupling	538507
	1999.02-2000.10		Rear	Saloon 4WD AGN		Flexible Coupling	538518
	1999.02-2000.10		Front	Saloon 4WD AGN	6MT	Flexible Coupling Kit	537626S
	1999.02-2000.10		Front	Saloon 4WD AGN	5MT	Flexible Coupling Kit	538508S
1.9 (66 kw)	1998.11-2002.04		Front	Saloon 4WD AGR	6MT	Flexible Coupling	537626
	1998.11-2002.04		Front	Saloon 4WD AGR	5MT	Flexible Coupling	538507
	1998.11-2002.04		Rear	Saloon 4WD AGR		Flexible Coupling	538518
	1998.11-2002.04		Front	Saloon 4WD AGR	6MT	Flexible Coupling Kit	537626S
	1998.11-2002.04		Front	Saloon 4WD AGR	5MT	Flexible Coupling Kit	538508S
1.9 (74 kw)	2000.01-2003.05		Front	Saloon 4WD ATD	6MT	Flexible Coupling	537626
	2000.01-2003.05		Front	Saloon 4WD ATD	5MT	Flexible Coupling	538507
	2000.01-2003.05		Rear	Saloon 4WD ATD		Flexible Coupling	538518
	2000.01-2003.05		Front	Saloon 4WD ATD	6MT	Flexible Coupling Kit	537626S
	2000.01-2003.05		Front	Saloon 4WD ATD	5MT	Flexible Coupling Kit	538508S
1.9 (85 kw)	1999.02-2001.07		Front	Saloon 4WD AJM/AUY	6MT	Flexible Coupling	537626
	1999.02-2001.07		Front	Saloon 4WD AJM/AUY	5MT	Flexible Coupling	538507
	1999.02-2001.07		Front	Saloon 4WD AJM/AUY	6MT	Flexible Coupling Kit	537626S
	1999.02-2001.07		Front	Saloon 4WD AJM/AUY	5MT	Flexible Coupling Kit	538508S
1.9 (96 kw)	2001.04-2003.05		Front	Saloon 4WD ASZ	6MT	Flexible Coupling	537626
	2001.04-2003.05		Front	Saloon 4WD ASZ	5MT	Flexible Coupling	538507
	2001.04-2003.05		Rear	Saloon 4WD ASZ		Flexible Coupling	538518
	2001.04-2003.05		Front	Saloon 4WD ASZ	6MT	Flexible Coupling Kit	537626S
	2001.04-2003.05		Front	Saloon 4WD ASZ	5MT	Flexible Coupling Kit	538508S
1.9 (110 kw)	2000.09-2005.05		Front	Saloon 4WD ARL	6MT	Flexible Coupling	537626
	2000.09-2005.05		Front	Saloon 4WD ARL	5MT	Flexible Coupling	538507
	2000.09-2005.05		Rear	Saloon 4WD ARL		Flexible Coupling	538518
	2000.09-2005.05		Front	Saloon 4WD ARL	6MT	Flexible Coupling Kit	537626S
	2000.09-2005.05		Front	Saloon 4WD ARL	5MT	Flexible Coupling Kit	538508S
2.0 (85 kw)	2000.04-2003.05		Front	Saloon 4WD AZH/AZJ	6MT	Flexible Coupling	537626
	2000.04-2003.05		Front	Saloon 4WD AZH/AZJ	5MT	Flexible Coupling	538507
	2000.04-2003.05		Rear	Saloon 4WD AZH/AZJ		Flexible Coupling	538518
	2000.04-2003.05		Front	Saloon 4WD AZH/AZJ	6MT	Flexible Coupling Kit	537626S
	2000.04-2003.05		Front	Saloon 4WD AZH/AZJ	5MT	Flexible Coupling Kit	538508S
2.3 (110 kw)	1998.09-2001.02		Front	Saloon 4WD AGZ	6MT	Flexible Coupling	537626
	1998.09-2001.02		Front	Saloon 4WD AGZ	5MT	Flexible Coupling	538507
	1998.09-2001.02		Rear	Saloon 4WD AGZ		Flexible Coupling	538518
	1998.09-2001.02		Front	Saloon 4WD AGZ	6MT	Flexible Coupling Kit	537626S
	1998.09-2001.02		Front	Saloon 4WD AGZ	5MT	Flexible Coupling Kit	538508S
2.3 (125 kw)	2000.09-2005.05		Front	Saloon 4WD AQN	6MT	Flexible Coupling	537626
	2000.09-2005.05		Front	Saloon 4WD AQN	5MT	Flexible Coupling	538507
	2000.09-2005.05		Rear	Saloon 4WD AQN		Flexible Coupling	538518
	2000.09-2005.05		Front	Saloon 4WD AQN	6MT	Flexible Coupling Kit	537626S
	2000.09-2005.05		Front	Saloon 4WD AQN	5MT	Flexible Coupling Kit	538508S
2.8 (150 kw)	1999.05-2003.05		Front	Saloon 4WD AQP/AUE/BDE	6MT	Flexible Coupling	537626
	1999.05-2003.05		Front	Saloon 4WD AQP/AUE/BDE	5MT	Flexible Coupling	538507
	1999.05-2003.05		Rear	Saloon 4WD AQP/AUE/BDE		Flexible Coupling	538518
	1999.05-2003.05		Front	Saloon 4WD AQP/AUE/BDE	6MT	Flexible Coupling Kit	537626S
	1999.05-2003.05		Front	Saloon 4WD AQP/AUE/BDE	5MT	Flexible Coupling Kit	538508S

	YEAR	TRANSM.	FITTING POSITION	BODY STYLE & DRIVE TYPE & ENGINE	REMARKS	PRODUCT	GSP Ref.
VW **Bora Estate/Variant**							
1.8 (92 kw)	1999.05-2000.10		Front	Estate 4WD AGN	6MT	Flexible Coupling	537626
	1999.05-2000.10		Front	Estate 4WD AGN	5MT	Flexible Coupling	538507
	1999.05-2000.10		Front	Estate 4WD AGN	6MT	Flexible Coupling Kit	537626S
	1999.05-2000.10		Front	Estate 4WD AGN	5MT	Flexible Coupling Kit	538508S
1.9 (74 kw)	2000.05-2003.05		Front	Estate 4WD ATD	6MT	Flexible Coupling	537626
	2000.05-2003.05		Front	Estate 4WD ATD	5MT	Flexible Coupling	538507
	2000.05-2003.05		Rear	Estate 4WD ATD		Flexible Coupling	538518
	2000.05-2003.05		Front	Estate 4WD ATD	6MT	Flexible Coupling Kit	537626S
	2000.05-2003.05		Front	Estate 4WD ATD	5MT	Flexible Coupling Kit	538508S
1.9 (85 kw)	1999.05-2001.07		Front	Estate 4WD AJM/AUY	6MT	Flexible Coupling	537626
	1999.05-2001.07		Front	Estate 4WD AJM/AUY	5MT	Flexible Coupling	538507
	1999.05-2001.07		Rear	Estate 4WD AJM/AUY		Flexible Coupling	538518
	1999.05-2001.07		Front	Estate 4WD AJM/AUY	6MT	Flexible Coupling Kit	537626S
	1999.05-2001.07		Front	Estate 4WD AJM/AUY	5MT	Flexible Coupling Kit	538508S
1.9 (96 kw)	2001.04-2003.05		Front	Estate 4WD ASZ	6MT	Flexible Coupling	537626
	2001.04-2003.05		Front	Estate 4WD ASZ	5MT	Flexible Coupling	538507
	2001.04-2003.05		Rear	Estate 4WD ASZ		Flexible Coupling	538518
	2001.04-2003.05		Front	Estate 4WD ASZ	6MT	Flexible Coupling Kit	537626S
	2001.04-2003.05		Front	Estate 4WD ASZ	5MT	Flexible Coupling Kit	538508S
1.9 (110 kw)	2001.05-2005.05		Front	Estate 4WD ARL	6MT	Flexible Coupling	537626
	2001.05-2005.05		Front	Estate 4WD ARL	5MT	Flexible Coupling	538507
	2001.05-2005.05		Rear	Estate 4WD ARL		Flexible Coupling	538518
	2001.05-2005.05		Front	Estate 4WD ARL	6MT	Flexible Coupling Kit	537626S
	2001.05-2005.05		Front	Estate 4WD ARL	5MT	Flexible Coupling Kit	538508S
2.0 (85 kw)	2000.04-2005.03		Front	Estate 4WD AZH/AZJ	6MT	Flexible Coupling	537626
	2000.04-2005.03		Front	Estate 4WD AZH/AZJ	5MT	Flexible Coupling	538507
	2000.04-2005.03		Rear	Estate 4WD AZH/AZJ		Flexible Coupling	538518
	2000.04-2005.03		Front	Estate 4WD AZH/AZJ	6MT	Flexible Coupling Kit	537626S
	2000.04-2005.03		Front	Estate 4WD AZH/AZJ	5MT	Flexible Coupling Kit	538508S
2.3 (110 kw)	1999.05-2001.02		Front	Estate 4WD AGZ	6MT	Flexible Coupling	537626
	1999.05-2001.02		Front	Estate 4WD AGZ	5MT	Flexible Coupling	538507
	1999.05-2001.02		Rear	Estate 4WD AGZ		Flexible Coupling	538518
	1999.05-2001.02		Front	Estate 4WD AGZ	6MT	Flexible Coupling Kit	537626S
	1999.05-2001.02		Front	Estate 4WD AGZ	5MT	Flexible Coupling Kit	538508S
2.3 (125 kw)	2000.09-2003.06		Front	Estate 4WD AQN	6MT	Flexible Coupling	537626
	2000.09-2003.06		Front	Estate 4WD AQN	5MT	Flexible Coupling	538507
	2000.09-2003.06		Rear	Estate 4WD AQN		Flexible Coupling	538518
	2000.09-2003.06		Front	Estate 4WD AQN	6MT	Flexible Coupling Kit	537626S
	2000.09-2003.06		Front	Estate 4WD AQN	5MT	Flexible Coupling Kit	538508S
2.8 (150 kw)	1999.05-2003.05		Front	Estate 4WD AQP/AUE/BDE	6MT	Flexible Coupling	537626
	1999.05-2003.05		Front	Estate 4WD AQP/AUE/BDE	5MT	Flexible Coupling	538507
	1999.05-2003.05		Rear	Estate 4WD AQP/AUE/BDE		Flexible Coupling	538518
	1999.05-2003.05		Front	Estate 4WD AQP/AUE/BDE	6MT	Flexible Coupling Kit	537626S
	1999.05-2003.05		Front	Estate 4WD AQP/AUE/BDE	5MT	Flexible Coupling Kit	538508S
Caddy							
1.9 (77 kw)	2008.11-2010.08	6MT	Rear	MPV 4WD BLS	Date from:2008.11	Propshaft	PS901361
	2008.11-2010.08	6MT	Rear	MPV Van 4WD BLS		Propshaft	PS901361
	2008.11-2010.08		Front	MPV 4WD BLS		Flexible Coupling	537626
	2008.11-2010.08		Front	MPV Van 4WD BLS		Flexible Coupling	537626
	2008.11-2010.08		Front	MPV 4WD BLS		Flexible Coupling Kit	537626S
	2008.11-2010.08		Front	MPV Van 4WD BLS		Flexible Coupling Kit	537626S
2.0 (55 kw)	2015.11-2019.07	6MT	Rear	MPV Van 4WD DFSC		Propshaft	PS901361
	2015.11-2019.07		Front	MPV Van 4WD DFSC		Flexible Coupling	537626
	2015.11-2019.07		Front	MPV Van 4WD DFSC		Flexible Coupling Kit	537626S
2.0 (62 kw)	2010.12-2015.05	6MT	Rear	MPV Van 4WD CFHE		Propshaft	PS901361
	2010.12-2015.05		Front	MPV Van 4WD CFHE		Flexible Coupling	537626
	2010.12-2015.05		Front	MPV Van 4WD CFHE		Flexible Coupling Kit	537626S
2.0 (81 kw)	2010.08-2015.05	6MT	Rear	MPV Van 4WD CFHF		Propshaft	PS901361
	2010.08-2015.05	6MT	Rear	MPV 4WD CFHF		Propshaft	PS901361
	2010.08-2015.05		Front	MPV Van 4WD CFHF		Flexible Coupling	537626
	2010.08-2015.05		Front	MPV 4WD CFHF		Flexible Coupling	537626
	2010.08-2015.05		Front	MPV Van 4WD CFHF		Flexible Coupling Kit	537626S
	2010.08-2015.05		Front	MPV 4WD CFHF		Flexible Coupling Kit	537626S
	2015.05-2020.09	6MT	Rear	MPV Van 4WD CFHF/CLCA		Propshaft	PS901361

	YEAR	TRANSM.	FITTING POSITION	BODY STYLE & DRIVE TYPE & ENGINE	REMARKS	PRODUCT	GSP Ref.
VW							
Caddy							
2.0 (81 kw)	2015.05-2020.09		Front	MPV 4WD CFHF/CLCA		Flexible Coupling	537626
	2015.05-2020.09		Front	MPV Van 4WD CFHF/CLCA		Flexible Coupling	537626
	2015.05-2020.09		Front	MPV 4WD CFHF/CLCA		Flexible Coupling Kit	537626S
	2015.05-2020.09		Front	MPV Van 4WD CFHF/CLCA		Flexible Coupling Kit	537626S
2.0 (90 kw)	2015.05-2020.09	6MT	Rear	MPV Van 4WD CUUE/DFSE		Propshaft	PS901361
	2015.05-2020.09	6MT	Rear	MPV 4WD CUUE/DFSE		Propshaft	PS901361
	2015.05-2020.09		Front	MPV Van 4WD CUUE/DFSE		Flexible Coupling	537626
	2015.05-2020.09		Front	MPV 4WD CUUE/DFSE		Flexible Coupling	537626
	2015.05-2020.09		Front	MPV Van 4WD CUUE/DFSE		Flexible Coupling Kit	537626S
	2015.05-2020.09		Front	MPV 4WD CUUE/DFSE		Flexible Coupling Kit	537626S
	2021.03-		Front	MPV 4WD DTRC		Flexible Coupling	537626
	2021.03-		Front	MPV Van 4WD DTRC		Flexible Coupling	537626
	2021.03-		Rear	MPV 4WD DTRC		Flexible Coupling	533882
	2021.03-		Rear	MPV Van 4WD DTRC		Flexible Coupling	533882
	2021.03-		Front	MPV 4WD DTRC		Flexible Coupling Kit	537626S
	2021.03-		Front	MPV Van 4WD DTRC		Flexible Coupling Kit	537626S
	2021.03-		Rear	MPV 4WD DTRC		Flexible Coupling Kit	533882S
	2021.03-		Rear	MPV Van 4WD DTRC		Flexible Coupling Kit	533882S
2.0 (103 kw)	2010.11-2015.05	6AT	Rear	MPV 4WD CFHC		Propshaft	PS901361
	2010.11-2015.05	6AT	Rear	MPV Van 4WD CFHC		Propshaft	PS901361
	2010.11-2015.05		Front	MPV 4WD CFHC		Flexible Coupling	537626
	2010.11-2015.05		Front	MPV Van 4WD CFHC		Flexible Coupling	537626
	2010.11-2015.05		Front	MPV 4WD CFHC		Flexible Coupling Kit	537626S
	2010.11-2015.05		Front	MPV Van 4WD CFHC		Flexible Coupling Kit	537626S
	2015.05-2020.09	6AT	Rear	MPV Van 4WD CFHC		Propshaft	PS901361
	2015.05-2020.09	6AT	Rear	MPV 4WD CFHC		Propshaft	PS901361
	2015.05-2020.09		Front	MPV Van 4WD CFHC		Flexible Coupling	537626
	2015.05-2020.09		Front	MPV 4WD CFHC		Flexible Coupling	537626
	2015.05-2020.09		Front	MPV Van 4WD CFHC		Flexible Coupling Kit	537626S
	2015.05-2020.09		Front	MPV 4WD CFHC		Flexible Coupling Kit	537626S
2.0 (110 kw)	2015.11-2020.09	6AT	Rear	MPV 4WD DFSB		Propshaft	PS901361
	2015.11-2020.09	6AT	Rear	MPV Van 4WD DFSB		Propshaft	PS901361
	2015.11-2020.09		Front	MPV 4WD DFSB		Flexible Coupling	537626
	2015.11-2020.09		Front	MPV Van 4WD DFSB		Flexible Coupling	537626
	2015.11-2020.09		Front	MPV 4WD DFSB		Flexible Coupling Kit	537626S
	2015.11-2020.09		Front	MPV Van 4WD DFSB		Flexible Coupling Kit	537626S
Caddy Alltrack							
2.0 (81 kw)	2015.05-2020.09	6MT	Rear	MPV 4WD CFHF/CLCA		Propshaft	PS901361
	2015.05-2020.09	6MT	Rear	MPV Van 4WD CFHF		Propshaft	PS901361
	2015.05-2020.09		Front	MPV 4WD CFHF/CLCA		Flexible Coupling	537626
	2015.05-2020.09		Front	MPV Van 4WD CFHF		Flexible Coupling	537626
	2015.05-2020.09		Front	MPV 4WD CFHF/CLCA		Flexible Coupling Kit	537626S
	2015.05-2020.09		Front	MPV Van 4WD CFHF		Flexible Coupling Kit	537626S
2.0 (90 kw)	2015.05-2020.09	6MT	Rear	MPV 4WD CUUE/DFSE	Date to:2020.09	Propshaft	PS901361
	2015.05-2020.09	6MT	Rear	MPV Van 4WD CUUE/DFSE	Date to:2020.09	Propshaft	PS901361
	2015.05-2020.09		Front	MPV 4WD CUUE/DFSE		Flexible Coupling	537626
	2015.05-2020.09		Front	MPV Van 4WD CUUE/DFSE		Flexible Coupling	537626
	2015.05-2020.09		Front	MPV 4WD CUUE/DFSE		Flexible Coupling Kit	537626S
	2015.05-2020.09		Front	MPV Van 4WD CUUE/DFSE		Flexible Coupling Kit	537626S
2.0 (103 kw)	2015.05-2020.09	6AT	Rear	MPV 4WD CFHC	Date to:2020.09	Propshaft	PS901361
	2015.05-2020.09	6AT	Rear	MPV Van 4WD CFHC	Date to:2020.09	Propshaft	PS901361
	2015.05-2020.09		Front	MPV 4WD CFHC		Flexible Coupling	537626
	2015.05-2020.09		Front	MPV Van 4WD CFHC		Flexible Coupling	537626
	2015.05-2020.09		Front	MPV 4WD CFHC		Flexible Coupling Kit	537626S
	2015.05-2020.09		Front	MPV Van 4WD CFHC		Flexible Coupling Kit	537626S
2.0 (110 kw)	2015.11-2020.09	6AT	Rear	MPV 4WD DFSB	Date to:2020.09	Propshaft	PS901361
	2015.11-2020.09	6AT	Rear	MPV Van 4WD DFSB	Date to:2020.09	Propshaft	PS901361
	2015.11-2020.09		Front	MPV 4WD DFSB		Flexible Coupling	537626
	2015.11-2020.09		Front	MPV Van 4WD DFSB		Flexible Coupling	537626
	2015.11-2020.09		Front	MPV 4WD DFSB		Flexible Coupling Kit	537626S
	2015.11-2020.09		Front	MPV Van 4WD DFSB		Flexible Coupling Kit	537626S
Caddy California							
2.0 (90 kw)	2021.03-		Front	MPV 4WD DTRC		Flexible Coupling	537626
	2021.03-		Rear	MPV 4WD DTRC		Flexible Coupling	533882

	YEAR	TRANSM.	FITTING POSITION	BODY STYLE & DRIVE TYPE & ENGINE	REMARKS	PRODUCT	GSP Ref.
VW							
Caddy California							
2.0 (90 kw)	2021.03-		Front	MPV 4WD DTRC		Flexible Coupling Kit	537626S
	2021.03-		Rear	MPV 4WD DTRC		Flexible Coupling Kit	533882S
Caddy California Maxi							
2.0 (90 kw)	2021.03-		Front	MPV 4WD DTRC		Flexible Coupling	537626
	2021.03-		Rear	MPV 4WD DTRC		Flexible Coupling	533882
	2021.03-		Front	MPV 4WD DTRC		Flexible Coupling Kit	537626S
	2021.03-		Rear	MPV 4WD DTRC		Flexible Coupling Kit	533882S
Caddy Maxi							
1.9 (77 kw)	2009.12-2010.08	6MT	Rear	MPV 4WD BLS	Date from:2009.12	Propshaft	PS901361
	2009.12-2010.08	6MT	Rear	MPV Van 4WD BLS	Date from:2009.12	Propshaft	PS901361
	2009.12-2010.08		Front	MPV 4WD BLS		Flexible Coupling	537626
	2009.12-2010.08		Front	MPV Van 4WD BLS		Flexible Coupling	537626
	2009.12-2010.08		Front	MPV 4WD BLS		Flexible Coupling Kit	537626S
	2009.12-2010.08		Front	MPV Van 4WD BLS		Flexible Coupling Kit	537626S
2.0 (62 kw)	2010.12-2015.05	6MT	Rear	MPV Van 4WD CFHE		Propshaft	PS901361
	2010.12-2015.05		Front	MPV Van 4WD CFHE		Flexible Coupling	537626
	2010.12-2015.05		Front	MPV Van 4WD CFHE		Flexible Coupling Kit	537626S
2.0 (81 kw)	2010.08-2015.05	6MT	Rear	MPV Van 4WD CFHF		Propshaft	PS901361
	2010.08-2015.05		Front	MPV Van 4WD CFHF		Flexible Coupling	537626
	2010.08-2015.05		Front	MPV Van 4WD CFHF		Flexible Coupling Kit	537626S
	2010.10-2015.05	6MT	Rear	MPV 4WD CFHF		Propshaft	PS901361
	2010.10-2015.05		Front	MPV 4WD CFHF		Flexible Coupling	537626
	2010.10-2015.05		Front	MPV 4WD CFHF		Flexible Coupling Kit	537626S
	2015.05-2020.09	6MT	Rear	MPV Van 4WD CFHF/CLCA		Propshaft	PS901361
	2015.05-2020.09		Front	MPV Van 4WD CFHF/CLCA		Flexible Coupling	537626
	2015.05-2020.09		Front	MPV 4WD CFHF/CLCA		Flexible Coupling	537626
	2015.05-2020.09		Front	MPV Van 4WD CFHF/CLCA		Flexible Coupling Kit	537626S
	2015.05-2020.09		Front	MPV 4WD CFHF/CLCA		Flexible Coupling Kit	537626S
2.0 (90 kw)	2015.05-2020.09	6MT	Rear	MPV 4WD CUUE/DFSE		Propshaft	PS901361
	2015.05-2020.09	6MT	Rear	MPV Van 4WD CUUE/DFSE		Propshaft	PS901361
	2015.05-2020.09		Front	MPV 4WD CUUE/DFSE		Flexible Coupling	537626
	2015.05-2020.09		Front	MPV Van 4WD CUUE/DFSE		Flexible Coupling	537626
	2015.05-2020.09		Front	MPV 4WD CUUE/DFSE		Flexible Coupling Kit	537626S
	2015.05-2020.09		Front	MPV Van 4WD CUUE/DFSE		Flexible Coupling Kit	537626S
2.0 (103 kw)	2010.11-2015.05	6AT	Rear	MPV 4WD CFHC		Propshaft	PS901361
	2010.11-2015.05	6AT	Rear	MPV Van 4WD CFHC		Propshaft	PS901361
	2010.11-2015.05		Front	MPV 4WD CFHC		Flexible Coupling	537626
	2010.11-2015.05		Front	MPV Van 4WD CFHC		Flexible Coupling	537626
	2010.11-2015.05		Front	MPV 4WD CFHC		Flexible Coupling Kit	537626S
	2010.11-2015.05		Front	MPV Van 4WD CFHC		Flexible Coupling Kit	537626S
	2015.05-2020.09	6AT	Rear	MPV 4WD CFHC		Propshaft	PS901361
	2015.05-2020.09	6AT	Rear	MPV Van 4WD CFHC		Propshaft	PS901361
	2015.05-2020.09		Front	MPV 4WD CFHC		Flexible Coupling	537626
	2015.05-2020.09		Front	MPV Van 4WD CFHC		Flexible Coupling	537626
	2015.05-2020.09		Front	MPV 4WD CFHC		Flexible Coupling Kit	537626S
	2015.05-2020.09		Front	MPV Van 4WD CFHC		Flexible Coupling Kit	537626S
2.0 (110 kw)	2015.11-2020.09	6AT	Rear	MPV Van 4WD DFSB		Propshaft	PS901361
	2015.11-2020.09	6AT	Rear	MPV 4WD DFSB		Propshaft	PS901361
	2015.11-2020.09		Front	MPV Van 4WD DFSB		Flexible Coupling	537626
	2015.11-2020.09		Front	MPV 4WD DFSB		Flexible Coupling	537626
	2015.11-2020.09		Front	MPV Van 4WD DFSB		Flexible Coupling Kit	537626S
	2015.11-2020.09		Front	MPV 4WD DFSB		Flexible Coupling Kit	537626S
California							
1.9 (63 kw)	2007.05-2009.11		Centre	Bus FWD AXC		Center Bearing Support	538670
1.9 (75 kw)	2007.05-2009.11		Centre	Bus FWD BRS		Center Bearing Support	538670
1.9 (77 kw)	2007.05-2009.11		Centre	Bus FWD AXB		Center Bearing Support	538670
2.0 (62 kw)	2009.09-2015.08		Centre	Bus FWD CAAA		Center Bearing Support	538670
2.0 (75 kw)	2009.08-2015.08		Centre	Bus FWD CAAB		Center Bearing Support	538670
2.0 (84 kw)	2011.05-2015.08		Centre	Bus FWD CAAD		Center Bearing Support	538670
2.0 (100 kw)	2010.05-2015.08		Centre	Bus FWD CAAE/CCHB		Center Bearing Support	538670
	2010.05-2015.08		Front	Bus 4WD CAAE/CCHB		Center Bearing Support Kit	539920S
2.0 (103 kw)	2009.08-2015.08		Centre	Bus FWD CAAC/CCHA		Center Bearing Support	538670
	2009.10-2015.08	6MT	Front	Bus 4WD CAAC/CCHA	Model:Transporter;Model:Transporter;Date from:2011.04;Wheelbase:3000 mm	Joint,propshaft	605147
	2009.10-2015.08	6MT	Rear	Bus 4WD CAAC/CCHA	Model:Transporter;Model:Transporter;Date from:2011.04;Wheelbase:3000 mm	Joint,propshaft	602051

	YEAR	TRANSM.	FITTING POSITION	BODY STYLE & DRIVE TYPE & ENGINE	REMARKS	PRODUCT	GSP Ref.
VW							
California							
2.0 (103 kw)	2009.10-2015.08		Front	Bus 4WD CAAC/CCHA		Center Bearing Support Kit	539920S
2.0 (110 kw)	2012.07-2015.08		Centre	Bus FWD CJKB		Center Bearing Support	538670
2.0 (132 kw)	2009.09-2015.08		Centre	Bus FWD CFCA		Center Bearing Support	538670
	2010.01-2015.08	7AT	Front	Bus 4WD CFCA	Date from:2014.02,Wheelbase:3000 mm	Propshaft	PS901375
	2010.01-2015.08	6MT/7AT	Front	Bus 4WD CFCA	Transmission:7AT6MT,Model:Transporter,Date from:2011.06,Transmission:7AT,Model:Transporter,Studio,Date from:2011.05,Wheelbase:3000 mm	Joint,propshaft	605147
	2010.01-2015.08	6MT/7AT	Rear	Bus 4WD CFCA	Transmission:7AT6MT,Model:Transporter,Date from:2011.06,Transmission:7AT,Model:Transporter,Studio,Date from:2011.05,Wheelbase:3000 mm	Joint,propshaft	602051
	2010.01-2015.08		Centre	Bus 4WD CFCA		Center Bearing Support	538670
	2010.01-2015.08		Front	Bus 4WD CFCA		Center Bearing Support Kit	539920S
2.0 (146 kw)	2018.08-	7AT	Front	Bus 4WD CXEC	Model:Transporter,Date to:2019.12,For PR code:0E1;Wheelbase:3000 mm	Joint,propshaft	605147
	2018.08-	7AT	Rear	Bus 4WD CXEC	Model:Transporter,Date to:2019.12,For PR code:0E1;Wheelbase:3000 mm	Joint,propshaft	602051
2.0 (150 kw)	2011.05-2015.08		Centre	Bus FWD CJKA		Center Bearing Support	538670
	2011.07-2015.08	7AT	Front	Bus 4WD CJKA	Model:Transporter;Wheelbase:3000 mm	Joint,propshaft	605147
	2011.07-2015.08	7AT	Rear	Bus 4WD CJKA	Model:Transporter;Wheelbase:3000 mm	Joint,propshaft	602051
	2011.07-2015.08		Front	Bus 4WD CJKA		Center Bearing Support Kit	539920S
	2015.06-	AT	Front	Bus 4WD CXEB/DMZA	Date to:2019.12,For PR code:0E1;Wheelbase:3000 mm	Joint,propshaft	605147
	2015.06-	AT	Rear	Bus 4WD CXEB/DMZA	Date to:2019.12,For PR code:0E1;Wheelbase:3000 mm	Joint,propshaft	602051
2.5 (85 kw)	1998.05-2003.04		Centre	Bus FWD AET (.-04.01), APL (.-12.99), AVT (12.99-.)		Center Bearing Support	538652
2.5 (96 kw)	2007.05-2009.11	6MT	Front	Bus 4WD AXD/BNZ		Propshaft	PS901375
	2007.05-2009.11	6MT	Rear	Bus 4WD AXD/BNZ	----------	Joint,propshaft	602478
	2007.05-2009.11		Front	Bus 4WD AXD/BNZ		Center Bearing Support	538614
	2007.05-2009.11		Rear	Bus 4WD AXD/BNZ		Center Bearing Support	538618
	2007.05-2009.11		Centre	Bus FWD AXD/BNZ		Center Bearing Support	538670
	2007.05-2009.11		Front	Bus 4WD AXD/BNZ		Center Bearing Support Kit	539920S
2.5 (120 kw)	2007.05-2009.11		Centre	Bus FWD BLJ		Center Bearing Support	538670
2.5 (128 kw)	2007.05-2009.11	6MT	Front	Bus 4WD AXE/BPC		Propshaft	PS901375
	2007.05-2009.11	6MT	Rear	Bus 4WD AXE/BPC	Model:Caravelle,Chassis no. from:7H-8-10S 001,wheel base:3000mm,For PR code:0E1/3M1/3M3/3M4	Propshaft	PS900570
	2007.05-2009.11	6MT	Rear	Bus 4WD AXE/BPC	Model:Caravelle,Chassis no. from:7H-8-10S 001,wheel base:3000mm,For PR code:0E1,3M1,3M3,3M4	Joint,propshaft	602478
	2007.05-2009.11		Front	Bus 4WD AXE/BPC		Center Bearing Support	538614
	2007.05-2009.11		Rear	Bus 4WD AXE/BPC		Center Bearing Support	538618
	2007.05-2009.11		Centre	Bus FWD AXE/BPC		Center Bearing Support	538670
	2007.05-2009.11		Front	Bus 4WD AXE/BPC		Center Bearing Support Kit	539920S
2.8 (150 kw)	2000.05-2001.04		Centre	Bus FWD AMV		Center Bearing Support	538652
Campmobile							
1.9 (50 kw)	1992.10-2003.04		Centre	Bus FWD ABL		Center Bearing Support	538652
2.0 (62 kw)	1990.09-2003.04		Centre	Bus FWD AAC		Center Bearing Support	538652
2.4 (55 kw)	1997.08-2003.04		Centre	Bus FWD AJA		Center Bearing Support	538652
2.4 (57 kw)	1990.09-1998.04		Centre	Bus FWD AAB		Center Bearing Support	538652
2.5 (75 kw)	1996.01-2003.04		Centre	Bus 4WD ACV, AXL		Center Bearing Support	538652
	1996.01-2003.04		Front	Bus 4WD ACV, AXL		Flexible Coupling	537853
2.5 (81 kw)	1990.09-2003.06		Centre	Bus FWD AAF (11.90-12.93), ACU, AEN, AEU		Center Bearing Support	538652
	1992.08-2003.04		Centre	Bus 4WD AAF (11.92-12.93), ACU (01.94-.), AEU		Center Bearing Support	538652
	1992.08-2003.04		Front	Bus 4WD AAF (11.92-12.93), ACU (01.94-.), AEU		Flexible Coupling	537853
2.5 (85 kw)	1996.07-2003.04		Centre	Bus 4WD AET (08.96-.), APL (05.99-.), AVT		Center Bearing Support	538652
	1996.07-2003.04		Front	Bus 4WD AET (08.96-.), APL (05.99-.), AVT		Flexible Coupling	537853
	1996.08-2003.04		Centre	Bus FWD AET (08.96-.), APL (05.99-.), AVT		Center Bearing Support	538652
2.5 (111 kw)	1998.05-2003.04		Centre	Bus FWD AHY, AXG		Center Bearing Support	538652
2.8 (103 kw)	1995.11-2000.04		Centre	Bus FWD AES (11.95-.)		Center Bearing Support	538652
2.8 (150 kw)	2000.04-2003.04		Centre	Bus FWD AMV, AXK		Center Bearing Support	538652
Caravelle							
1.9 (62 kw)	2006.01-2009.11		Centre	Bus FWD BRR		Center Bearing Support	538670
1.9 (63 kw)	2003.04-2009.11		Centre	Bus FWD AXC		Center Bearing Support	538670
1.9 (75 kw)	2006.01-2009.11		Centre	Bus FWD BRS		Center Bearing Support	538670
2.0 (62 kw)	2009.09-2015.11		Centre	Bus FWD CAAA		Center Bearing Support	538670
2.0 (75 kw)	2009.09-2015.11		Centre	Bus FWD CAAB		Center Bearing Support	538670
2.0 (84 kw)	2011.05-2015.11		Centre	Bus FWD CAAD		Center Bearing Support	538670
2.0 (85 kw)	2003.11-2015.11		Centre	Bus FWD AXA		Center Bearing Support	538670
	2006.01-2014.03		Centre	Bus FWD AXACNG		Center Bearing Support	538670
	2011.05-2015.08		Centre	Bus FWD CSDA		Center Bearing Support	538670
2.0 (100 kw)	2010.05-2015.11	MT	Front	Bus 4WD CAAE/CCHB	Date to:2014.02;Date from:2014.03,Wheelbase:3000 mm	Propshaft	PS901375
	2010.05-2015.11	MT	Front	Bus 4WD CAAE/CCHB	Date from:2014.03,Wheelbase:3400 mm	Propshaft	PS901642
	2010.05-2015.11	6MT	Rear	Bus 4WD CAAE/CCHB	Date from:2011.04;Wheelbase:3000 mm	Propshaft	PS901350
	2010.05-2015.11	6MT	Rear	Bus 4WD CAAE/CCHB	Date from:2014.02,For PR code:0E2;Wheelbase:3400 mm	Propshaft	PS901373
	2010.05-2015.11	6MT	Front	Bus 4WD CAAE/CCHB	Model:Transporter,Date from:2011.04;Wheelbase:3000 mm	Joint,propshaft	605147
	2010.05-2015.11	6MT	Rear	Bus 4WD CAAE/CCHB	Model:Transporter,Date from:2011.04;Wheelbase:3000 mm	Joint,propshaft	602051

	YEAR	TRANSM.	FITTING POSITION	BODY STYLE & DRIVE TYPE & ENGINE	REMARKS	PRODUCT	GSP Ref.
VW Caravelle							
2.0 (100 kw)	2010.05-2015.11		Centre	Bus 4WD CAAE/CCHB		Center Bearing Support	538670
	2010.05-2015.11		Centre	Bus FWD CAAE/CCHB		Center Bearing Support	538670
	2010.05-2015.11		Front	Bus 4WD CAAE/CCHB		Center Bearing Support Kit	539920S
2.0 (103 kw)	2009.09-2015.11	MT	Front	Bus 4WD CAAC/CCHA	Date to:2014.02;Date from:2014.03,Wheelbase:3000 mm	Propshaft	PS901375
	2009.09-2015.11	MT	Front	Bus 4WD CAAC/CCHA	Date from:2014.03,Wheelbase:3400 mm	Propshaft	PS901642
	2009.09-2015.11	6MT	Rear	Bus 4WD CAAC/CCHA	Date from:2011.04;Wheelbase:3000 mm	Propshaft	PS901350
	2009.09-2015.11	MT	Rear	Bus 4WD CAAC/CCHA	Date from:2014.02,For PR code:0E2	Propshaft	PS901373
	2009.09-2015.11	6MT	Front	Bus 4WD CAAC/CCHA	Model:Transporter;Model:Transporter;Date from:2011.04;Wheelbase:3000 mm	Joint,propshaft	605147
	2009.09-2015.11	6MT	Rear	Bus 4WD CAAC/CCHA	Model:Transporter;Model:Transporter;Date from:2011.04;Wheelbase:3000 mm	Joint,propshaft	602051
	2009.09-2015.11		Centre	Bus FWD CAAC/CCHA		Center Bearing Support	538670
	2009.09-2015.11		Centre	Bus 4WD CAAC/CCHA		Center Bearing Support	538670
	2009.09-2015.11		Front	Bus 4WD CAAC/CCHA		Center Bearing Support Kit	539920S
2.0 (110 kw)	2012.07-2015.11		Centre	Bus FWD CJKB		Center Bearing Support	538670
	2015.04-		Front	Bus FWD CXFA/CXHA/DNAA		Center Bearing Support Kit	539920S
	2015.08-	AT	Front	Bus 4WD CXFA/CXHA	Date to:2019.12,For PR code:0E2;Wheelbase:3400 mm	Propshaft	PS901642
	2015.08-	AT	Front	Bus 4WD CXFA/CXHA	Model:Transporter;Date to:2019.12;For PR code:0E1;Wheelbase:3000 mm	Joint,propshaft	605147
	2015.08-	AT	Rear	Bus 4WD CXFA/CXHA	Model:Transporter;Date to:2019.12;For PR code:0E1;Wheelbase:3000 mm	Joint,propshaft	602051
	2015.08-		Centre	Bus 4WD CXFA/CXHA		Center Bearing Support Kit	539928S
2.0 (132 kw)	2009.09-2015.11		Centre	Bus FWD CFCA		Center Bearing Support	538670
	2010.01-2015.11	7AT	Front	Bus 4WD CFCA	Date from:2014.02;Wheelbase:3000 mm	Propshaft	PS901375
	2010.01-2015.11	AT	Front	Bus 4WD CFCA	Date from:2014.03,Wheelbase:3400 mm	Propshaft	PS901642
	2010.01-2015.11	7AT	Rear	Bus 4WD CFCA	Date from:2011.05;Wheelbase:3000 mm	Propshaft	PS901350
	2010.01-2015.11	AT	Rear	Bus 4WD CFCA	Date from:2014.02,For PR code:0E2	Propshaft	PS901373
	2010.01-2015.11	7AT/6MT	Front	Bus 4WD CFCA	Model:Transporter,Date from:2011.04;Wheelbase:3000 mm	Joint,propshaft	605147
	2010.01-2015.11	7AT/6MT	Rear	Bus 4WD CFCA	Model:Transporter,Date from:2011.04;Wheelbase:3000 mm	Joint,propshaft	602051
	2010.01-2015.11		Centre	Bus 4WD CFCA		Center Bearing Support	538670
	2010.01-2015.11		Front	Bus 4WD CFCA		Center Bearing Support Kit	539920S
	2015.06-2019.12	AT	Front	Bus 4WD CFCA	For PR code:0E2,Wheelbase: 3400 mm	Propshaft	PS901642
	2015.06-2019.12	AT	Front	Bus 4WD CFCA	Model:Transporter,For PR code:0E1;Wheelbase:3000 mm	Joint,propshaft	605147
	2015.06-2019.12	AT	Rear	Bus 4WD CFCA	Model:Transporter,For PR code:0E1;Wheelbase:3000 mm	Joint,propshaft	602051
	2015.06-2019.12		Centre	Bus 4WD CFCA		Center Bearing Support Kit	539928S
2.0 (146 kw)	2018.08-	AT	Front	Bus 4WD CXEC	Date to:2019.12,Wheelbase:3000 mm	Propshaft	PS901375
	2018.08-	AT	Front	Bus 4WD CXEC	Date to:2019.12,Wheelbase:3400 mm	Propshaft	PS901642
	2018.08-	7AT	Rear	Bus 4WD CXEC	Date to:2019.12,For PR code:0E1;Wheelbase:3000 mm	Propshaft	PS901350
	2018.08-	7AT	Rear	Bus 4WD CXEC	Date to:2019.12,For PR code:0E2;Wheelbase:3400 mm	Propshaft	PS901373
	2018.08-	7AT	Front	Bus 4WD CXEC	Model:Transporter,Date to:2019.12;For PR code:0E1;Wheelbase:3000 mm	Joint,propshaft	605147
	2018.08-	7AT	Rear	Bus 4WD CXEC	Model:Transporter,Date to:2019.12;For PR code:0E1;Wheelbase:3000 mm	Joint,propshaft	602051
	2018.08-		Centre	Bus 4WD CXEC		Center Bearing Support Kit	539928S
2.0 (150 kw)	2011.05-2015.11	AT	Front	Bus 4WD CJKA	Date to:2014.02;Date from:2014.03,Wheelbase:3000 mm	Propshaft	PS901375
	2011.05-2015.11	AT	Front	Bus 4WD CJKA	Date from:2014.03,Wheelbase:3400 mm	Propshaft	PS901642
	2011.05-2015.11	7AT	Rear	Bus 4WD CJKA	Model:Transporter;Wheelbase:3000 mm	Propshaft	PS901350
	2011.05-2015.11	7AT	Rear	Bus 4WD CJKA	Date from:2014.02,For PR code:0E2;Wheelbase:3400 mm	Propshaft	PS901373
	2011.05-2015.11	7AT	Front	Bus 4WD CJKA	Model:Transporter;Wheelbase:3000 mm	Joint,propshaft	605147
	2011.05-2015.11	7AT	Rear	Bus 4WD CJKA	Model:Transporter;Wheelbase:3000 mm	Joint,propshaft	602051
	2011.05-2015.11		Centre	Bus FWD CJKA		Center Bearing Support	538670
	2011.05-2015.11		Centre	Bus 4WD CJKA		Center Bearing Support	538670
	2011.05-2015.11		Front	Bus 4WD CJKA		Center Bearing Support Kit	539920S
	2015.06-	AT	Front	Bus 4WD CXEB/DMZA	Date to:2019.12,For PR code:0E2;Wheelbase:3400 mm	Propshaft	PS901642
	2015.06-	AT	Front	Bus 4WD CXEB/DMZA	Date to:2019.12,For PR code:0E1;Wheelbase:3000 mm	Joint,propshaft	605147
	2015.06-	AT	Rear	Bus 4WD CXEB/DMZA	Date to:2019.12,For PR code:0E1;Wheelbase:3000 mm	Joint,propshaft	602051
	2015.06-		Centre	Bus 4WD CXEB/DMZA		Center Bearing Support Kit	539928S
	2015.06-2019.07	AT	Front	Bus 4WD CJKA	For PR code:0E2,Wheelbase: 3400 mm	Propshaft	PS901642
	2015.06-2019.07	7AT	Front	Bus 4WD CJKA	Model:Transporter,For PR code:0E1;Wheelbase:3000 mm	Joint,propshaft	605147
	2015.06-2019.07	7AT	Rear	Bus 4WD CJKA	Model:Transporter,For PR code:0E1;Wheelbase:3000 mm	Joint,propshaft	602051
	2015.06-2019.07		Centre	Bus 4WD CJKA		Center Bearing Support Kit	539928S
2.4 (57 kw)	1992.10-1998.09		Centre	Bus 4WD AAB		Center Bearing Support	538652
	1992.10-1998.09		Front	Bus 4WD AAB		Flexible Coupling	537853
2.5 (96 kw)	2003.04-2009.11	6MT	Front	Bus 4WD AXD/BNZ		Propshaft	PS901375
	2003.04-2009.11	6MT	Rear	Bus 4WD AXD/BNZ	wheel base:3400mm,For PR code:0E2	Propshaft	PS900569
	2003.04-2009.11	6MT	Rear	Bus 4WD AXD/BNZ	Chassis no. from:7H-B-103.001;wheel base:3000mm;For PR code:0E1/3M0/3M4/3M6/3M7/3M8/3M9	Propshaft	PS900570
	2003.04-2009.11	6MT	Rear	Bus 4WD AXD/BNZ		Joint,propshaft	602478
	2003.04-2009.11		Front	Bus 4WD AXD/BNZ		Center Bearing Support	538614
	2003.04-2009.11		Rear	Bus 4WD AXD/BNZ		Center Bearing Support	538618
	2003.04-2009.11		Centre	Bus FWD AXD/BNZ		Center Bearing Support	538670

	YEAR	TRANSM.	FITTING POSITION	BODY STYLE & DRIVE TYPE & ENGINE	REMARKS	PRODUCT	GSP Ref.
VW							
Caravelle							
2.5 (96 kw)	2003.04-2009.11		Centre	Bus 4WD AXD/BNZ		Center Bearing Support	538670
	2003.04-2009.11		Front	Bus 4WD AXD/BNZ		Center Bearing Support Kit	539920S
2.5 (120 kw)	2006.01-2009.11		Centre	Bus FWD BLJ		Center Bearing Support	538670
2.5 (128 kw)	2003.04-2009.11		Centre	Bus FWD AXE/BPC		Center Bearing Support	538670
	2004.07-2009.11	6MT	Front	Bus 4WD AXE/BPC		Propshaft	PS901375
	2004.07-2009.11	6MT	Rear	Bus 4WD AXE/BPC	wheel base:3400mm,For PR code:0E2	Propshaft	PS900569
	2004.07-2009.11	6MT	Rear	Bus 4WD AXE/BPC	Chassis no. from:7H-8-105 001,wheel base:3000mm,For PR code:0E1/3M1/3M3/3M4	Propshaft	PS900570
	2004.07-2009.11	6MT	Rear	Bus 4WD AXE/BPC	Model:Caravelle,Chassis no. from:7H-8-105 001,wheel base:3000mm,For PR code:0E1,3M1,3M3,3M4	Joint,propshaft	602478
	2004.07-2009.11		Front	Bus 4WD AXE/BPC		Center Bearing Support	538614
	2004.07-2009.11		Rear	Bus 4WD AXE/BPC		Center Bearing Support	538618
	2004.07-2009.11		Centre	Bus 4WD AXE/BPC		Center Bearing Support	538670
	2004.07-2009.11		Front	Bus 4WD AXE/BPC		Center Bearing Support Kit	539920S
3.2 (173 kw)	2004.02-2009.11		Centre	Bus FWD BDL/BKK/CFLA		Center Bearing Support	538670
	2004.02-2009.12	6MT	Front	Bus 4WD BDL/BKK/CFLA	Date from:2004.02,not for For Engine code:CFLA	Propshaft	PS901375
	2004.02-2009.12	6MT	Rear	Bus 4WD BDL/BKK/CFLA	wheel base:3400mm,For PR code:0E2	Propshaft	PS900569
	2004.02-2009.12	6MT	Rear	Bus 4WD BDL/BKK/CFLA	Chassis no. from:7H-8-105 001,wheel base:3000mm,For PR code:0E1/3M1/3M3/3M4/3M6/3M7/3M8/3M9	Propshaft	PS900570
	2004.02-2009.12	6MT	Rear	Bus 4WD BDL/BKK/CFLA	----------	Joint,propshaft	602478
	2004.02-2009.12		Front	Bus 4WD BDL/BKK/CFLA		Center Bearing Support	538614
	2004.02-2009.12		Rear	Bus 4WD BDL/BKK/CFLA		Center Bearing Support	538618
	2004.02-2009.12		Centre	Bus 4WD BDL/BKK/CFLA		Center Bearing Support	538670
	2004.02-2009.12		Front	Bus 4WD BDL/BKK/CFLA		Center Bearing Support Kit	539920S
CC							
2.0 (103 kw)	2011.11-2016.12		Rear	Coupe 4WD CFFB		Flexible Coupling	533882
	2011.11-2016.12		Front	Coupe 4WD CFFB		Flexible Coupling Kit	537626S
	2011.11-2016.12		Rear	Coupe 4WD CFFB		Flexible Coupling Kit	533882S
2.0 (125 kw)	2011.11-2013.01		Rear	Coupe 4WD CFGB		Flexible Coupling	533882
	2011.11-2013.01		Front	Coupe 4WD CFGB		Flexible Coupling Kit	537626S
	2011.11-2013.01		Rear	Coupe 4WD CFGB		Flexible Coupling Kit	533882S
2.0 (130 kw)	2012.12-2016.12		Rear	Coupe 4WD CFGC		Flexible Coupling	533882
	2012.12-2016.12		Front	Coupe 4WD CFGC		Flexible Coupling Kit	537626S
	2012.12-2016.12		Rear	Coupe 4WD CFGC		Flexible Coupling Kit	533882S
3.6 (220 kw)	2011.11-2016.12		Front	Coupe 4WD BWS		Flexible Coupling Kit	537626S
Crafter 28							
2.0 (80 kw)	2011.05-2016.12	6MT	Rear	Chassis Cabin RWD CKTB	Wheelbase:4325 mm	Propshaft	PS901368
	2011.05-2016.12	6MT	Rear	Van RWD CKTB	for PR number:0R0,1SB,1SD,0WC,1UV,Wheelbase: 3665 mm	Propshaft	PS901684
	2011.05-2016.12		Centre	Chassis Cabin RWD CKTB	Installation size:197mm	Center Bearing Support	538627
	2011.05-2016.12		Centre	Van RWD CKTB	Installation size:197mm	Center Bearing Support	538627
	2011.05-2016.12		Centre	Chassis Cabin RWD CKTB	Installation size:194mm	Center Bearing Support	538635
	2011.05-2016.12		Centre	Van RWD CKTB	Installation size:194mm	Center Bearing Support	538635
	2011.05-2016.12		Centre	Chassis Cabin RWD CKTB	with gasket	Center Bearing Support Kit	538680S
	2011.05-2016.12		Centre	Van RWD CKTB	with gasket	Center Bearing Support Kit	538680S
	2011.05-2016.12		Centre	Chassis Cabin RWD CKTB	without gasket	Center Bearing Support Kit	538693S
	2011.05-2016.12		Centre	Van RWD CKTB	without gasket	Center Bearing Support Kit	538693S
2.0 (100 kw)	2011.05-2016.12	AT	Rear	Van RWD CKTC		Propshaft	PS900631
	2011.05-2016.12		Centre	Van RWD CKTC	Installation size:197mm	Center Bearing Support	538627
	2011.05-2016.12		Centre	Van RWD CKTC	Installation size:194mm	Center Bearing Support	538635
	2011.05-2016.12		Centre	Van RWD CKTC	with gasket	Center Bearing Support Kit	538680S
	2011.05-2016.12		Centre	Van RWD CKTC	without gasket	Center Bearing Support Kit	538693S
2.0 (103 kw)	2015.11-2016.12	6MT	Rear	Van RWD CSLC	for PR code:0R0,1SB,1SD,0WC,0R0,1UV,Wheelbase: 3665 mm	Propshaft	PS901684
	2015.11-2016.12		Centre	Van RWD CSLC	Installation size:197mm	Center Bearing Support	538627
	2015.11-2016.12		Centre	Van RWD CSLC	Installation size:194mm	Center Bearing Support	538635
	2015.11-2016.12		Centre	Van RWD CSLC		Center Bearing Support Kit	538693S
2.0 (105 kw)	2011.10-2016.12	6MT	Rear	Chassis Cabin RWD CKUC	Wheelbase:4325 mm	Propshaft	PS901368
	2011.10-2016.12	6MT	Rear	Van RWD CKUC	Wheelbase:4325 mm	Propshaft	PS901368
	2011.10-2016.12	6MT	Rear	Chassis Cabin RWD CKUC	for PR number:0R0,Wheelbase: 3665 mm	Propshaft	PS901684
	2011.10-2016.12	6MT	Rear	Van RWD CKUC	For Model code:Crafter 50,for PR code:0R0,Wheelbase:3665 mm	Propshaft	PS901684
	2011.10-2016.12		Centre	Chassis Cabin RWD CKUC	Installation size:197mm	Center Bearing Support	538627
	2011.10-2016.12		Centre	Van RWD CKUC	Installation size:197mm	Center Bearing Support	538627
	2011.10-2016.12		Centre	Chassis Cabin RWD CKUC	Installation size:194mm	Center Bearing Support	538635
	2011.10-2016.12		Centre	Van RWD CKUC	Installation size:194mm	Center Bearing Support	538635
	2011.10-2016.12		Centre	Chassis Cabin RWD CKUC	with gasket	Center Bearing Support Kit	538680S
	2011.10-2016.12		Centre	Van RWD CKUC	with gasket	Center Bearing Support Kit	538680S
	2011.10-2016.12		Centre	Chassis Cabin RWD CKUC	without gasket	Center Bearing Support Kit	538693S
	2011.10-2016.12		Centre	Van RWD CKUC	without gasket	Center Bearing Support Kit	538693S

	YEAR	TRANSM.	FITTING POSITION	BODY STYLE & DRIVE TYPE & ENGINE	REMARKS	PRODUCT	GSP Ref.
VW							
Crafter 28							
2.0 (105 kw)	2011.10-2016.12		Front	Chassis Cabin RWD CKUC		Flexible Coupling	538515
	2011.10-2016.12		Front	Van RWD CKUC		Flexible Coupling	538515
2.0 (120 kw)	2011.07-2016.12	6MT	Rear	Chassis Cabin RWD CKUB	Date in:2011.06;Not for Engine Code:CSNA;Wheelbase:1660 mm;For PR code:0R0;Date from:2012.02;Wheelbase:1660 mm;For PR code:0R0/1A9;GP	Propshaft	PS901363
	2011.07-2016.12	6MT	Rear	Van RWD CKUB	Date in:2011.06;Not for Engine Code:CSNA;Wheelbase:1660 mm;For PR code:0R0;Date from:2012.02;Wheelbase:1660 mm;For PR code:0R0/1A9;GP	Propshaft	PS901363
	2011.07-2016.12	6MT	Rear	Chassis Cabin RWD CKUB	Wheelbase:4325 mm	Propshaft	PS901368
	2011.07-2016.12	6MT	Rear	Van RWD CKUB	Engine Code:CKUB/CSNA,Wheelbase:4325 mm	Propshaft	PS901368
	2011.07-2016.12		Centre	Chassis Cabin RWD CKUB	Installation size:197mm	Center Bearing Support	538627
	2011.07-2016.12		Centre	Van RWD CKUB	Installation size:197mm	Center Bearing Support	538627
	2011.07-2016.12		Centre	Chassis Cabin RWD CKUB	Installation size:194mm	Center Bearing Support	538635
	2011.07-2016.12		Centre	Van RWD CKUB	Installation size:194mm	Center Bearing Support	538635
	2011.07-2016.12		Centre	Chassis Cabin RWD CKUB	with gasket	Center Bearing Support Kit	538680S
	2011.07-2016.12		Centre	Van RWD CKUB	with gasket	Center Bearing Support Kit	538680S
	2011.07-2016.12		Centre	Chassis Cabin RWD CKUB	without gasket	Center Bearing Support Kit	538693S
	2011.07-2016.12		Centre	Van RWD CKUB	without gasket	Center Bearing Support Kit	538693S
	2011.07-2016.12		Front	Chassis Cabin RWD CKUB		Flexible Coupling	538515
	2011.07-2016.12		Front	Van RWD CKUB		Flexible Coupling	538515
2.5 (65 kw)	2006.04-2011.07		Centre	Chassis Cabin RWD BJJ/CEBA	Installation size:197mm	Center Bearing Support	538627
	2006.04-2011.07		Centre	Van RWD BJJ/CEBA	Installation size:197mm	Center Bearing Support	538627
	2006.04-2011.07		Centre	Chassis Cabin RWD BJJ/CEBA	Installation size:194mm	Center Bearing Support	538635
	2006.04-2011.07		Centre	Van RWD BJJ/CEBA	Installation size:194mm	Center Bearing Support	538635
	2006.04-2011.07		Centre	Chassis Cabin RWD BJJ/CEBA	with gasket	Center Bearing Support Kit	538680S
	2006.04-2011.07		Centre	Van RWD BJJ/CEBA	with gasket	Center Bearing Support Kit	538680S
	2006.04-2011.07		Centre	Chassis Cabin RWD BJJ/CEBA	without gasket	Center Bearing Support Kit	538693S
	2006.04-2011.07		Centre	Van RWD BJJ/CEBA	without gasket	Center Bearing Support Kit	538693S
2.5 (80 kw)	2006.04-2013.05		Centre	Chassis Cabin RWD BJK/CEBB	Installation size:197mm	Center Bearing Support	538627
	2006.04-2013.05		Centre	Van RWD BJK/CEBB	Installation size:197mm	Center Bearing Support	538627
	2006.04-2013.05		Centre	Chassis Cabin RWD BJK/CEBB	Installation size:194mm	Center Bearing Support	538635
	2006.04-2013.05		Centre	Van RWD BJK/CEBB	Installation size:194mm	Center Bearing Support	538635
	2006.04-2013.05		Centre	Chassis Cabin RWD BJK/CEBB	with gasket	Center Bearing Support Kit	538680S
	2006.04-2013.05		Centre	Van RWD BJK/CEBB	with gasket	Center Bearing Support Kit	538680S
	2006.04-2013.05		Centre	Chassis Cabin RWD BJK/CEBB	without gasket	Center Bearing Support Kit	538693S
	2006.04-2013.05		Centre	Van RWD BJK/CEBB	without gasket	Center Bearing Support Kit	538693S
2.5 (100 kw)	2006.04-2013.05		Centre	Chassis Cabin RWD BJL/CECA	Installation size:197mm	Center Bearing Support	538627
	2006.04-2013.05		Centre	Van RWD BJL/CECA	Installation size:197mm	Center Bearing Support	538627
	2006.04-2013.05		Centre	Chassis Cabin RWD BJL/CECA	Installation size:194mm	Center Bearing Support	538635
	2006.04-2013.05		Centre	Van RWD BJL/CECA	Installation size:194mm	Center Bearing Support	538635
	2006.04-2013.05		Centre	Chassis Cabin RWD BJL/CECA	with gasket	Center Bearing Support Kit	538680S
	2006.04-2013.05		Centre	Van RWD BJL/CECA	with gasket	Center Bearing Support Kit	538680S
	2006.04-2013.05		Centre	Chassis Cabin RWD BJL/CECA	without gasket	Center Bearing Support Kit	538693S
	2006.04-2013.05		Centre	Van RWD BJL/CECA	without gasket	Center Bearing Support Kit	538693S
2.5 (120 kw)	2006.04-2011.07	MT	Front	Van RWD BJM/CECB	Engine Code:BJM,Wheelbase:4325 mm,For PR code:0R0	Propshaft	PS901674
	2006.04-2011.07	MT	Front	Chassis Cabin RWD BJM/CECB	Not for Engine Code:CECB,Wheelbase:4325 mm,For PR code:0R0	Propshaft	PS901674
	2006.04-2011.07	6MT	Rear	Van RWD BJM/CECB	Engine Code:BJM,Wheelbase:4325 mm	Propshaft	PS901368
	2006.04-2011.07	6MT	Rear	Chassis Cabin RWD BJM/CECB	Not for Engine Code:BJM/CECB,Wheelbase:4325 mm	Propshaft	PS901368
	2006.04-2011.07	MT	Rear	Van RWD BJM/CECB	Engine Code:BJM,Wheelbase:3665 mm,For PR code:0R0/K4A	Propshaft	PS901362
	2006.04-2011.07	MT	Rear	Chassis Cabin RWD BJM/CECB	Not for Engine Code:CECB,Wheelbase:3665 mm,For PR code:K4A/0R0	Propshaft	PS901362
	2006.04-2011.07		Centre	Van RWD BJM/CECB	Installation size:197mm	Center Bearing Support	538627
	2006.04-2011.07		Centre	Chassis Cabin RWD BJM/CECB	Installation size:197mm	Center Bearing Support	538627
	2006.04-2011.07		Centre	Van RWD BJM/CECB	Installation size:194mm	Center Bearing Support	538635
	2006.04-2011.07		Centre	Chassis Cabin RWD BJM/CECB	Installation size:194mm	Center Bearing Support	538635
	2006.04-2011.07		Centre	Van RWD BJM/CECB	with gasket	Center Bearing Support Kit	538680S
	2006.04-2011.07		Centre	Chassis Cabin RWD BJM/CECB	with gasket	Center Bearing Support Kit	538680S
	2006.04-2011.07		Centre	Van RWD BJM/CECB	without gasket	Center Bearing Support Kit	538693S
	2006.04-2011.07		Centre	Chassis Cabin RWD BJM/CECB	without gasket	Center Bearing Support Kit	538693S
Crafter 30							
2.0 (80 kw)	2011.05-2016.12	6MT	Rear	Chassis Cabin RWD CKTB/CSLA	Wheelbase:4325 mm	Propshaft	PS901368
	2011.05-2016.12	6MT	Rear	Bus RWD CKTB/CSLA	for PR number:0R0,1SB,1SD,0WC,1UV,Wheelbase: 3665 mm	Propshaft	PS901684
	2011.05-2016.12	6MT	Rear	Chassis Cabin RWD CKTB/CSLA	For Model code:Crafter 30,for PR number:0WC,0R0,1SA,Wheelbase: 3665 mm	Propshaft	PS901684
	2011.05-2016.12	6MT	Rear	Van RWD CKTB/CSLA	for PR number:0R0,1SB,1SD,0WC,1UV,Wheelbase: 3665 mm	Propshaft	PS901684
	2011.05-2016.12	MT	Rear	Bus RWD CKTB/CSLA	For Model code:Crafter 30,Wheelbase:3665 mm,For PR code:0WC/0R0/1SA/1UA/1UB/1UC/1UM/1UU/0WL	Propshaft	PS900370
	2011.05-2016.12	MT	Rear	Chassis Cabin RWD CKTB/CSLA	For Model code:Crafter 30,Wheelbase:3665 mm,For PR code:0WC/0R0/1SA/1UA/1UB/1UC/1UM/1UU/0WL	Propshaft	PS900370
	2011.05-2016.12	MT	Rear	Van RWD CKTB/CSLA	For Model code:Crafter 30,Wheelbase:3665 mm,For PR code:0WC/0R0/1SA/1UA/1UB/1UC/1UM/1UU/0WL	Propshaft	PS900370
	2011.05-2016.12		Centre	Bus RWD CKTB/CSLA	Installation size:197mm	Center Bearing Support	538627
	2011.05-2016.12		Centre	Chassis Cabin RWD CKTB/CSLA	Installation size:197mm	Center Bearing Support	538627

	YEAR	TRANSM.	FITTING POSITION	BODY STYLE & DRIVE TYPE & ENGINE	REMARKS	PRODUCT	GSP Ref.
VW **Crafter 30**							
2.0 (80 kw)	2011.05-2016.12		Centre	Van RWD CKTB/CSLA	Installation size:197mm	Center Bearing Support	538627
	2011.05-2016.12		Centre	Bus RWD CKTB/CSLA	Installation size:194mm	Center Bearing Support	538635
	2011.05-2016.12		Centre	Chassis Cabin RWD CKTB/CSLA	Installation size:194mm	Center Bearing Support	538635
	2011.05-2016.12		Centre	Van RWD CKTB/CSLA	Installation size:194mm	Center Bearing Support	538635
	2011.05-2016.12		Centre	Bus RWD CKTB/CSLA	with gasket	Center Bearing Support Kit	538680S
	2011.05-2016.12		Centre	Chassis Cabin RWD CKTB/CSLA	with gasket	Center Bearing Support Kit	538680S
	2011.05-2016.12		Centre	Van RWD CKTB/CSLA	with gasket	Center Bearing Support Kit	538680S
	2011.05-2016.12		Centre	Bus RWD CKTB/CSLA	without gasket	Center Bearing Support Kit	538693S
	2011.05-2016.12		Centre	Chassis Cabin RWD CKTB/CSLA	without gasket	Center Bearing Support Kit	538693S
	2011.05-2016.12		Centre	Van RWD CKTB/CSLA	without gasket	Center Bearing Support Kit	538693S
2.0 (84 kw)	2013.11-2016.12	6MT	Rear	Van RWD CSLB	Wheelbase:4325 mm	Propshaft	PS901368
	2013.11-2016.12	6MT	Rear	Chassis Cabin RWD CSLB	Wheelbase:4325 mm	Propshaft	PS901368
	2013.11-2016.12	6MT	Rear	Van RWD CSLB	for PR number:0R0,Wheelbase: 3665 mm	Propshaft	PS901684
	2013.11-2016.12	6MT	Rear	Chassis Cabin RWD CSLB	for PR number:0R0,Wheelbase: 3665 mm	Propshaft	PS901684
	2013.11-2016.12	6MT	Rear	Bus RWD CSLB	for PR number:0R0,Wheelbase: 3665 mm	Propshaft	PS901684
	2013.11-2016.12		Centre	Van RWD CSLB	Installation size:197mm	Center Bearing Support	538627
	2013.11-2016.12		Centre	Chassis Cabin RWD CSLB	Installation size:197mm	Center Bearing Support	538627
	2013.11-2016.12		Centre	Bus RWD CSLB	Installation size:197mm	Center Bearing Support	538627
	2013.11-2016.12		Centre	Van RWD CSLB	Installation size:194mm	Center Bearing Support	538635
	2013.11-2016.12		Centre	Chassis Cabin RWD CSLB	Installation size:194mm	Center Bearing Support	538635
	2013.11-2016.12		Centre	Bus RWD CSLB	Installation size:194mm	Center Bearing Support	538635
	2013.11-2016.12		Centre	Van RWD CSLB		Center Bearing Support Kit	538693S
	2013.11-2016.12		Centre	Chassis Cabin RWD CSLB		Center Bearing Support Kit	538693S
	2013.11-2016.12		Centre	Bus RWD CSLB		Center Bearing Support Kit	538693S
2.0 (100 kw)	2011.05-2016.12	6MT	Rear	Chassis Cabin RWD CKTC	Wheelbase:4325 mm	Propshaft	PS901368
	2011.05-2016.12	6MT	Rear	Bus RWD CKTC	for PR number:0R0,1SB,1SD,0WC,1UV,Wheelbase: 3665 mm	Propshaft	PS901684
	2011.05-2016.12	6MT	Rear	Chassis Cabin RWD CKTC	for PR number:0R0,1SB,1SD,0WC,1UV,Wheelbase: 3665 mm	Propshaft	PS901684
	2011.05-2016.12	6MT	Rear	Van RWD CKTC	For Model code:Crafter 30,for PR number:0WC,0R0,1UV,Wheelbase: 3665 mm	Propshaft	PS901684
	2011.05-2016.12	6MT	Rear	Van RWD CKTC	Model:Crafter 30/35,Wheelbase:3250 mm,PR Code:0WL,0R0,1SA	Propshaft	PS901829
	2011.05-2016.12	AT	Rear	Bus RWD CKTC		Propshaft	PS900631
	2011.05-2016.12	AT	Rear	Chassis Cabin RWD CKTC		Propshaft	PS900631
	2011.05-2016.12	AT	Rear	Van RWD CKTC		Propshaft	PS900631
	2011.05-2016.12	MT	Rear	Bus RWD CKTC	For Model code:Crafter 30,Wheelbase:3665 mm,For PR code:0WC,0R0,1SA/1UA/1UB/1UC/1UM/1UU/0WL	Propshaft	PS900370
	2011.05-2016.12	MT	Rear	Chassis Cabin RWD CKTC	wheel base:3665 mm,For PR code:0WC,0R0,1SA/1UA/1UB/1UC/1UM/1UU/0WL	Propshaft	PS900370
	2011.05-2016.12	MT	Rear	Van RWD CKTC	wheel base:3665 mm,For PR code:0WC,0R0,1SA/1UA/1UB/1UC/1UM/1UU/0WL	Propshaft	PS900370
	2011.05-2016.12		Centre	Bus RWD CKTC	Installation size:197mm	Center Bearing Support	538627
	2011.05-2016.12		Centre	Chassis Cabin RWD CKTC	Installation size:197mm	Center Bearing Support	538627
	2011.05-2016.12		Centre	Van RWD CKTC	Installation size:197mm	Center Bearing Support	538627
	2011.05-2016.12		Centre	Bus RWD CKTC	Installation size:194mm	Center Bearing Support	538635
	2011.05-2016.12		Centre	Chassis Cabin RWD CKTC	Installation size:194mm	Center Bearing Support	538635
	2011.05-2016.12		Centre	Van RWD CKTC	Installation size:194mm	Center Bearing Support	538635
	2011.05-2016.12		Centre	Bus RWD CKTC	with gasket	Center Bearing Support Kit	538680S
	2011.05-2016.12		Centre	Chassis Cabin RWD CKTC	with gasket	Center Bearing Support Kit	538680S
	2011.05-2016.12		Centre	Van RWD CKTC	with gasket	Center Bearing Support Kit	538680S
	2011.05-2016.12		Centre	Bus RWD CKTC	without gasket	Center Bearing Support Kit	538693S
	2011.05-2016.12		Centre	Chassis Cabin RWD CKTC	without gasket	Center Bearing Support Kit	538693S
	2011.05-2016.12		Centre	Van RWD CKTC	without gasket	Center Bearing Support Kit	538693S
2.0 (103 kw)	2015.11-2016.12	6MT	Rear	Chassis Cabin RWD CSLC	for PR number:0R0,1SB,1SD,0WC,1UV,Wheelbase: 3665 mm	Propshaft	PS901684
	2015.11-2016.12	6MT	Rear	Van RWD CSLC	for PR code:0R0,1SB,1SD,0WC,0R0,1UV,Wheelbase: 3665 mm	Propshaft	PS901684
	2015.11-2016.12	6MT	Rear	Van RWD CSLC	Model:Crafter 30/35,Wheelbase:3250 mm,PR Code:0WL,0R0,1SA	Propshaft	PS901829
	2015.11-2016.12	MT	Rear	Chassis Cabin RWD CSLC	For Model code:Crafter 30,Wheelbase:3665 mm,For PR code:0WC,0R0,1SA/1UA/1UB/1UC/1UM/1UU/0WL	Propshaft	PS900370
	2015.11-2016.12	MT	Rear	Van RWD CSLC	For Model code:Crafter 30,Wheelbase:3665 mm,For PR code:0WC,0R0,1SA/1UA/1UB/1UC/1UM/1UU/0WL	Propshaft	PS900370
	2015.11-2016.12		Centre	Chassis Cabin RWD CSLC	Installation size:197mm	Center Bearing Support	538627
	2015.11-2016.12		Centre	Van RWD CSLC	Installation size:197mm	Center Bearing Support	538627
	2015.11-2016.12		Centre	Chassis Cabin RWD CSLC	Installation size:194mm	Center Bearing Support	538635
	2015.11-2016.12		Centre	Van RWD CSLC	Installation size:194mm	Center Bearing Support	538635
	2015.11-2016.12		Centre	Chassis Cabin RWD CSLC		Center Bearing Support Kit	538693S
	2015.11-2016.12		Centre	Van RWD CSLC		Center Bearing Support Kit	538693S
2.0 (105 kw)	2011.10-2016.12	6MT	Rear	Chassis Cabin RWD CKUC	Wheelbase:4325 mm	Propshaft	PS901368
	2011.10-2016.12	6MT	Rear	Van RWD CKUC	Wheelbase:4325 mm	Propshaft	PS901368
	2011.10-2016.12	6MT	Rear	Chassis Cabin RWD CKUC	for PR number:0R0,Wheelbase: 3665 mm	Propshaft	PS901684
	2011.10-2016.12		Centre	Chassis Cabin RWD CKUC	Installation size:197mm	Center Bearing Support	538627
	2011.10-2016.12		Centre	Van RWD CKUC	Installation size:197mm	Center Bearing Support	538627
	2011.10-2016.12		Centre	Chassis Cabin RWD CKUC	Installation size:194mm	Center Bearing Support	538635

	YEAR	TRANSM.	FITTING POSITION	BODY STYLE & DRIVE TYPE & ENGINE	REMARKS	PRODUCT	GSP Ref.
VW **Crafter 30**							
2.0 (105 kw)	2011.10-2016.12		Centre	Van RWD CKUC	Installation size:194mm	Center Bearing Support	538635
	2011.10-2016.12		Centre	Chassis Cabin RWD CKUC	with gasket	Center Bearing Support Kit	538680S
	2011.10-2016.12		Centre	Van RWD CKUC	with gasket	Center Bearing Support Kit	538680S
	2011.10-2016.12		Centre	Chassis Cabin RWD CKUC	without gasket	Center Bearing Support Kit	538693S
	2011.10-2016.12		Centre	Van RWD CKUC	without gasket	Center Bearing Support Kit	538693S
	2011.10-2016.12		Front	Chassis Cabin RWD CKUC		Flexible Coupling	538515
	2011.10-2016.12		Front	Van RWD CKUC		Flexible Coupling	538515
2.0 (120 kw)	2011.07-2016.12	6MT	Rear	Bus RWD CKUB/CSNA	Date from:2012.02,Wheelbase:3665 mm,For PR code:0R0/1AB/1AF	Propshaft	PS901363
	2011.07-2016.12	6MT	Rear	Chassis Cabin RWD CKUB/CSNA	Date to:2011.06,Not for Engine Code:CSNA,Wheelbase:3665 mm,For PR code:0R0,Date from:2012.02,Wheelbase:3665 mm,For PR code:0R0/1AB/1AF	Propshaft	PS901363
	2011.07-2016.12	6MT	Rear	Van RWD CKUB/CSNA	Date to:2011.06,Not for Engine Code:CSNA,Wheelbase:3665 mm,For PR code:0R0,Date from:2012.02,Wheelbase:3665 mm,For PR code:0R0/1AB/1AF	Propshaft	PS901363
	2011.07-2016.12	6MT	Rear	Chassis Cabin RWD CKUB/CSNA	Wheelbase:4325 mm	Propshaft	PS901368
	2011.07-2016.12	6MT	Rear	Van RWD CKUB/CSNA	Engine Code:CKUB/CSNA,Wheelbase:4325 mm	Propshaft	PS901368
	2011.07-2016.12	6MT	Rear	Van RWD CKUB/CSNA	Model:Crafter 30/35,Wheelbase:3250 mm,PR Code:0WL,0R0,1SA	Propshaft	PS901829
	2011.07-2016.12		Centre	Bus RWD CKUB/CSNA	Installation size:197mm	Center Bearing Support	538627
	2011.07-2016.12		Centre	Chassis Cabin RWD CKUB/CSNA	Installation size:197mm	Center Bearing Support	538627
	2011.07-2016.12		Centre	Van RWD CKUB/CSNA	Installation size:197mm	Center Bearing Support	538627
	2011.07-2016.12		Centre	Bus RWD CKUB/CSNA	Installation size:194mm	Center Bearing Support	538635
	2011.07-2016.12		Centre	Chassis Cabin RWD CKUB/CSNA	Installation size:194mm	Center Bearing Support	538635
	2011.07-2016.12		Centre	Van RWD CKUB/CSNA	Installation size:194mm	Center Bearing Support	538635
	2011.07-2016.12		Centre	Bus RWD CKUB/CSNA	with gasket	Center Bearing Support Kit	538680S
	2011.07-2016.12		Centre	Chassis Cabin RWD CKUB/CSNA	with gasket	Center Bearing Support Kit	538680S
	2011.07-2016.12		Centre	Van RWD CKUB/CSNA	with gasket	Center Bearing Support Kit	538680S
	2011.07-2016.12		Centre	Bus RWD CKUB/CSNA	without gasket	Center Bearing Support Kit	538693S
	2011.07-2016.12		Centre	Chassis Cabin RWD CKUB/CSNA	without gasket	Center Bearing Support Kit	538693S
	2011.07-2016.12		Centre	Van RWD CKUB/CSNA	without gasket	Center Bearing Support Kit	538693S
	2011.07-2016.12		Front	Bus RWD CKUB/CSNA		Flexible Coupling	538515
	2011.07-2016.12		Front	Chassis Cabin RWD CKUB/CSNA		Flexible Coupling	538515
	2011.07-2016.12		Front	Van RWD CKUB/CSNA		Flexible Coupling	538515
2.5 (65 kw)	2006.04-2011.07	6MT	Rear	Van RWD BJJ/CEBA	For model:crafter30/crafter30,Engine code:BJJ,Wheel base:3665 mm	Propshaft	PS901986
	2006.04-2011.07		Centre	Bus RWD BJJ/CEBA	Installation size:197mm	Center Bearing Support	538627
	2006.04-2011.07		Centre	Chassis Cabin RWD BJJ/CEBA	Installation size:197mm	Center Bearing Support	538627
	2006.04-2011.07		Centre	Van RWD BJJ/CEBA	Installation size:197mm	Center Bearing Support	538627
	2006.04-2011.07		Centre	Bus RWD BJJ/CEBA	Installation size:194mm	Center Bearing Support	538635
	2006.04-2011.07		Centre	Chassis Cabin RWD BJJ/CEBA	Installation size:194mm	Center Bearing Support	538635
	2006.04-2011.07		Centre	Van RWD BJJ/CEBA	Installation size:194mm	Center Bearing Support	538635
	2006.04-2011.07		Centre	Bus RWD BJJ/CEBA	with gasket	Center Bearing Support Kit	538680S
	2006.04-2011.07		Centre	Chassis Cabin RWD BJJ/CEBA	with gasket	Center Bearing Support Kit	538680S
	2006.04-2011.07		Centre	Van RWD BJJ/CEBA	with gasket	Center Bearing Support Kit	538680S
	2006.04-2011.07		Centre	Bus RWD BJJ/CEBA	without gasket	Center Bearing Support Kit	538693S
	2006.04-2011.07		Centre	Chassis Cabin RWD BJJ/CEBA	without gasket	Center Bearing Support Kit	538693S
	2006.04-2011.07		Centre	Van RWD BJJ/CEBA	without gasket	Center Bearing Support Kit	538693S
2.5 (80 kw)	2006.04-2013.05	6MT	Front	Bus RWD BJK/CEBB	Date from:2008.08,For Model code:Crafter 30,For Engine Code:BJK,Wheelbase:4325mm,For PR code:0R0	Propshaft	PS900365
	2006.04-2013.05	6MT	Rear	Bus RWD BJK/CEBB	Date to:2008.10,For Model code:Crafter 30,For Engine Code:BJK,Wheelbase:3665 mm,For PR code:K4S/0R0	Propshaft	PS900368
	2006.04-2013.05	6MT	Rear	Bus RWD BJK/CEBB	Date to:2006.10,For Engine Code:BJK,Wheelbase:3665 mm,For PR code:0R0/K4A	Propshaft	PS900368
	2006.04-2013.05	6MT	Rear	Bus RWD BJK/CEBB	Date from:2006.08,For Engine Code:BJK,Wheelbase:3665 mm,For PR code:0R0/5WC/0WL/K4A/1SA/1UV/1UB/1UC/1UW/1UJ	Propshaft	PS900368
	2006.04-2013.05	6MT	Rear	Bus RWD BJK/CEBB	Date from:2008.10,Not for Engine Code:BJK,For Model code:Crafter 30,For Engine Code:BJK,Wheelbase:3665 mm,For PR code:0R0/5WC/0WL/K4A/1UV/1UB/1UC/1UW/1UJ	Propshaft	PS900368
	2006.04-2013.05	6MT	Rear	Bus RWD BJK/CEBB	Date from:2008.10,Not for Engine Code:BJK,For Model code:Crafter 30,For Engine Code:BJK,Wheelbase:3665 mm,For PR code:0R0/5WC/0WL/K4A/1UV/1UB/1UC/1UW/1UJ	Propshaft	PS900368
	2006.04-2013.05	6MT	Rear	Bus RWD BJK/CEBB	Date from:2006.08,For Engine Code:BJK,Wheelbase:3665 mm,For PR code:0R0/5WC/0WL/K4A/1SA/1UV/1UB/1UC/1UW/1UJ	Propshaft	PS900368
	2006.04-2013.05	6MT	Rear	Bus RWD BJK/CEBB	Date from:2011.01,For Model code:Crafter 30,For Engine Code:CEBB,wheel base:3665 mm,For PR code:0R0/5WC/0WL/K4A/1SA/1UV/1UB/1UC/1UW/1UJ	Propshaft	PS900368
	2006.04-2013.05	6MT	Rear	Bus RWD BJK/CEBB	Date to:2010.12,For Engine Code:CEBB,Wheelbase:3665 mm,For PR code:0R0/5WC/K4A/K6B/K8F/K9G/*5M/1UV	Propshaft	PS900550
	2006.04-2013.05	6MT	Rear	Bus RWD BJK/CEBB	[illegible]	Propshaft	PS901365
	2006.04-2013.05	6MT	Rear	Bus RWD BJK/CEBB	[illegible]	Propshaft	PS901367
	2006.04-2013.05	6MT	Rear	Bus RWD BJK/CEBB	[illegible]	Propshaft	PS901367
	2006.04-2013.05	6MT	Rear	Bus RWD BJK/CEBB	[illegible]	Propshaft	PS901367
	2006.04-2013.05	6MT	Rear	Bus RWD BJK/CEBB	For Engine Code:BJK,For PR code:1UV,Wheelbase:4325 mm	Propshaft	PS901368
	2006.04-2013.05	6MT	Rear	Bus RWD BJK/CEBB	For Engine Code:CEBB,For PR code:0WC/1UV/1SB/1SD,Wheelbase:4325 mm	Propshaft	PS901368
	2006.04-2013.05	6MT	Rear	Bus RWD BJK/CEBB	Date from:2008.08,For Engine Code:BJK,For PR code:0WC/1SB/1SD,Wheelbase:4325 mm	Propshaft	PS901368
	2006.04-2013.05	6MT	Rear	Bus RWD BJK/CEBB	Date to:2010.10,Not For Engine code:BJK,for PR code:0WC/1UA/1UB/1UC/1UM/0R0/0WL/1UU,Wheelbase:3250 mm	Propshaft	PS901370
	2006.04-2013.05	6MT	Rear	Bus RWD BJK/CEBB	Date from:2011.01,For Model code:Crafter 30,For Engine Code:CEBB,For PR code:0WL,0R0/1SA,Wheelbase:3250 mm	Propshaft	PS901370
	2006.04-2013.05	6MT	Rear	Bus RWD BJK/CEBB	[illegible]	Propshaft	PS901828
	2006.04-2013.05	6MT	Rear	Van RWD BJK/CEBB	For model:crafter30/crafter35,Engine code:BJK,Wheel base:3665 mm	Propshaft	PS901986
	2006.04-2013.05		Centre	Bus RWD BJK/CEBB	Installation size:197mm	Center Bearing Support	538627
	2006.04-2013.05		Centre	Chassis Cabin RWD BJK/CEBB	Installation size:197mm	Center Bearing Support	538627
	2006.04-2013.05		Centre	Van RWD BJK/CEBB	Installation size:197mm	Center Bearing Support	538627

	YEAR	TRANSM.	FITTING POSITION	BODY STYLE & DRIVE TYPE & ENGINE	REMARKS	PRODUCT	GSP Ref.
VW							
Crafter 30							
2.5 (80 kw)	2006.04-2013.05		Centre	Bus RWD BJK/CEBB	Installation size:194mm	Center Bearing Support	538635
	2006.04-2013.05		Centre	Chassis Cabin RWD BJK/CEBB	Installation size:194mm	Center Bearing Support	538635
	2006.04-2013.05		Centre	Van RWD BJK/CEBB	Installation size:194mm	Center Bearing Support	538635
	2006.04-2013.05		Centre	Bus RWD BJK/CEBB	with gasket	Center Bearing Support Kit	538680S
	2006.04-2013.05		Centre	Chassis Cabin RWD BJK/CEBB	with gasket	Center Bearing Support Kit	538680S
	2006.04-2013.05		Centre	Van RWD BJK/CEBB	with gasket	Center Bearing Support Kit	538680S
	2006.04-2013.05		Centre	Bus RWD BJK/CEBB	without gasket	Center Bearing Support Kit	538693S
	2006.04-2013.05		Centre	Chassis Cabin RWD BJK/CEBB	without gasket	Center Bearing Support Kit	538693S
	2006.04-2013.05		Centre	Van RWD BJK/CEBB	without gasket	Center Bearing Support Kit	538693S
2.5 (100 kw)	2006.04-2013.05	6MT	Rear	Van RWD BJL/CECA	For model:crafter30/crafter35,Engine code:BJL,Wheel base:3665 mm	Propshaft	PS901986
	2006.04-2013.05		Centre	Bus RWD BJL/CECA	Installation size:197mm	Center Bearing Support	538627
	2006.04-2013.05		Centre	Chassis Cabin RWD BJL/CECA	Installation size:197mm	Center Bearing Support	538627
	2006.04-2013.05		Centre	Van RWD BJL/CECA	Installation size:197mm	Center Bearing Support	538627
	2006.04-2013.05		Centre	Bus RWD BJL/CECA	Installation size:194mm	Center Bearing Support	538635
	2006.04-2013.05		Centre	Chassis Cabin RWD BJL/CECA	Installation size:194mm	Center Bearing Support	538635
	2006.04-2013.05		Centre	Van RWD BJL/CECA	Installation size:194mm	Center Bearing Support	538635
	2006.04-2013.05		Centre	Bus RWD BJL/CECA	with gasket	Center Bearing Support Kit	538680S
	2006.04-2013.05		Centre	Chassis Cabin RWD BJL/CECA	with gasket	Center Bearing Support Kit	538680S
	2006.04-2013.05		Centre	Van RWD BJL/CECA	with gasket	Center Bearing Support Kit	538680S
	2006.04-2013.05		Centre	Bus RWD BJL/CECA	without gasket	Center Bearing Support Kit	538693S
	2006.04-2013.05		Centre	Chassis Cabin RWD BJL/CECA	without gasket	Center Bearing Support Kit	538693S
	2006.04-2013.05		Centre	Van RWD BJL/CECA	without gasket	Center Bearing Support Kit	538693S
2.5 (120 kw)	2006.04-2011.07	MT	Front	Bus RWD BJM/CECB	Engine Code:BJM,Wheelbase:4325 mm,For PR code:0R0	Propshaft	PS901674
	2006.04-2011.07	MT	Front	Chassis Cabin RWD BJM/CECB	Not for Engine Code:CECB,Wheelbase:4325 mm,For PR code:0R0	Propshaft	PS901674
	2006.04-2011.07	MT	Front	Van RWD BJM/CECB	Engine Code:BJM,Wheelbase:4325 mm,For PR code:0R0	Propshaft	PS901674
	2006.04-2011.07	6MT	Rear	Bus RWD BJM/CECB	Wheelbase:4325 mm	Propshaft	PS901368
	2006.04-2011.07	6MT	Rear	Chassis Cabin RWD BJM/CECB	Not for Engine Code:BJM/CECB,Wheelbase:4325 mm	Propshaft	PS901368
	2006.04-2011.07	6MT	Rear	Van RWD BJM/CECB	Engine Code:BJM,Wheelbase:4325 mm	Propshaft	PS901368
	2006.04-2011.07	MT	Rear	Bus RWD BJM/CECB	For Model code:Crafter 30,Date to:2010.12,For Engine Code:CECB,wheel base:3665 mm,For PR code:0R0/K4A/K4F/K4G	Propshaft	PS900550
	2006.04-2011.07	MT	Rear	Chassis Cabin RWD BJM/CECB	Date to:2010.12,Engine Code:CECB,wheel base:3665 mm,For PR code:K4F/K4G/K4A/0R0	Propshaft	PS900550
	2006.04-2011.07	MT	Rear	Van RWD BJM/CECB	Date to:2010.12,For Engine Code:CECB,wheel base:3665 mm,For PR code:K4F/K4G/K4A/0R0	Propshaft	PS900550
	2006.04-2011.07	MT	Rear	Van RWD BJM/CECB	For Engine Code:CECB,wheel base:4325 mm	Propshaft	PS900558
	2006.04-2011.07	MT	Rear	Bus RWD BJM/CECB	Engine Code:BJM,Wheelbase:3665 mm,For PR code:0R0/K4A	Propshaft	PS901362
	2006.04-2011.07	MT	Rear	Chassis Cabin RWD BJM/CECB	Not for Engine Code:CECB,Wheelbase:3665 mm,For PR code:K4A/0R0	Propshaft	PS901362
	2006.04-2011.07	MT	Rear	Van RWD BJM/CECB	Engine Code:BJM,Wheelbase:3665 mm,For PR code:0R0,K4A	Propshaft	PS901362
	2006.04-2011.07		Centre	Bus RWD BJM/CECB	Installation size:197mm	Center Bearing Support	538627
	2006.04-2011.07		Centre	Chassis Cabin RWD BJM/CECB	Installation size:197mm	Center Bearing Support	538627
	2006.04-2011.07		Centre	Van RWD BJM/CECB	Installation size:197mm	Center Bearing Support	538627
	2006.04-2011.07		Centre	Bus RWD BJM/CECB	Installation size:194mm	Center Bearing Support	538635
	2006.04-2011.07		Centre	Chassis Cabin RWD BJM/CECB	Installation size:194mm	Center Bearing Support	538635
	2006.04-2011.07		Centre	Van RWD BJM/CECB	Installation size:194mm	Center Bearing Support	538635
	2006.04-2011.07		Centre	Bus RWD BJM/CECB	with gasket	Center Bearing Support Kit	538680S
	2006.04-2011.07		Centre	Chassis Cabin RWD BJM/CECB	with gasket	Center Bearing Support Kit	538680S
	2006.04-2011.07		Centre	Van RWD BJM/CECB	with gasket	Center Bearing Support Kit	538680S
	2006.04-2011.07		Centre	Bus RWD BJM/CECB	without gasket	Center Bearing Support Kit	538693S
	2006.04-2011.07		Centre	Chassis Cabin RWD BJM/CECB	without gasket	Center Bearing Support Kit	538693S
	2006.04-2011.07		Centre	Van RWD BJM/CECB	without gasket	Center Bearing Support Kit	538693S
Crafter 32							
2.0 (80 kw)	2011.05-2016.12	6MT	Rear	Chassis Cabin RWD CKTB	Wheelbase:4325 mm	Propshaft	PS901368
	2011.05-2016.12	6MT	Rear	Bus RWD CKTB/CSLA	for PR number:0R0,1SB,1SD,0WC,1UV,Wheelbase: 3665 mm	Propshaft	PS901684
	2011.05-2016.12	6MT	Rear	Van RWD CKTB	for PR number:0R0,1SB,1SD,0WC,1UV,Wheelbase: 3665 mm	Propshaft	PS901684
	2011.05-2016.12		Centre	Bus RWD CKTB/CSLA	Installation size:197mm	Center Bearing Support	538627
	2011.05-2016.12		Centre	Chassis Cabin RWD CKTB	Installation size:197mm	Center Bearing Support	538627
	2011.05-2016.12		Centre	Van RWD CKTB	Installation size:197mm	Center Bearing Support	538627
	2011.05-2016.12		Centre	Bus RWD CKTB/CSLA	Installation size:194mm	Center Bearing Support	538635
	2011.05-2016.12		Centre	Chassis Cabin RWD CKTB	Installation size:194mm	Center Bearing Support	538635
	2011.05-2016.12		Centre	Van RWD CKTB	Installation size:194mm	Center Bearing Support	538635
	2011.05-2016.12		Centre	Bus RWD CKTB/CSLA	with gasket	Center Bearing Support Kit	538680S
	2011.05-2016.12		Centre	Chassis Cabin RWD CKTB	with gasket	Center Bearing Support Kit	538680S
	2011.05-2016.12		Centre	Van RWD CKTB	with gasket	Center Bearing Support Kit	538680S
	2011.05-2016.12		Centre	Bus RWD CKTB/CSLA	without gasket	Center Bearing Support Kit	538693S
	2011.05-2016.12		Centre	Chassis Cabin RWD CKTB	without gasket	Center Bearing Support Kit	538693S
	2011.05-2016.12		Centre	Van RWD CKTB	without gasket	Center Bearing Support Kit	538693S

	YEAR	TRANSM.	FITTING POSITION	BODY STYLE & DRIVE TYPE & ENGINE	REMARKS	PRODUCT	GSP Ref.
VW **Crafter 32**							
2.0 (84 kw)	2013.11-2016.12	6MT	Rear	Van RWD CSLB	Wheelbase:4325 mm	Propshaft	PS901368
	2013.11-2016.12	6MT	Rear	Van RWD CSLB	for PR number:0R0,Wheelbase: 3665 mm	Propshaft	PS901684
	2013.11-2016.12	6MT	Rear	Bus RWD CSLB	for PR number:0R0,Wheelbase: 3665 mm	Propshaft	PS901684
	2013.11-2016.12		Centre	Van RWD CSLB	Installation size:197mm	Center Bearing Support	538627
	2013.11-2016.12		Centre	Bus RWD CSLB	Installation size:197mm	Center Bearing Support	538627
	2013.11-2016.12		Centre	Van RWD CSLB	Installation size:194mm	Center Bearing Support	538635
	2013.11-2016.12		Centre	Bus RWD CSLB	Installation size:194mm	Center Bearing Support	538635
	2013.11-2016.12		Centre	Van RWD CSLB		Center Bearing Support Kit	538693S
	2013.11-2016.12		Centre	Bus RWD CSLB		Center Bearing Support Kit	538693S
2.0 (100 kw)	2011.05-2016.12	6MT	Rear	Chassis Cabin RWD CKTC	Wheelbase:4325 mm	Propshaft	PS901368
	2011.05-2016.12	6MT	Rear	Bus RWD CKTC	for PR number:0R0,1SB,1SD,0WC,1UV,Wheelbase: 3665 mm	Propshaft	PS901684
	2011.05-2016.12	6MT	Rear	Chassis Cabin RWD CKTC	for PR number:0R0,1SB,1SD,0WC,1UV,Wheelbase: 3665 mm	Propshaft	PS901684
	2011.05-2016.12	AT	Rear	Bus RWD CKTC		Propshaft	PS900631
	2011.05-2016.12	AT	Rear	Chassis Cabin RWD CKTC		Propshaft	PS900631
	2011.05-2016.12	AT	Rear	Van RWD CKTC		Propshaft	PS900631
	2011.05-2016.12		Centre	Bus RWD CKTC	Installation size:197mm	Center Bearing Support	538627
	2011.05-2016.12		Centre	Chassis Cabin RWD CKTC	Installation size:197mm	Center Bearing Support	538627
	2011.05-2016.12		Centre	Van RWD CKTC	Installation size:197mm	Center Bearing Support	538627
	2011.05-2016.12		Centre	Bus RWD CKTC	Installation size:194mm	Center Bearing Support	538635
	2011.05-2016.12		Centre	Chassis Cabin RWD CKTC	Installation size:194mm	Center Bearing Support	538635
	2011.05-2016.12		Centre	Van RWD CKTC	Installation size:194mm	Center Bearing Support	538635
	2011.05-2016.12		Centre	Bus RWD CKTC	with gasket	Center Bearing Support Kit	538680S
	2011.05-2016.12		Centre	Chassis Cabin RWD CKTC	with gasket	Center Bearing Support Kit	538680S
	2011.05-2016.12		Centre	Van RWD CKTC	with gasket	Center Bearing Support Kit	538680S
	2011.05-2016.12		Centre	Bus RWD CKTC	without gasket	Center Bearing Support Kit	538693S
	2011.05-2016.12		Centre	Chassis Cabin RWD CKTC	without gasket	Center Bearing Support Kit	538693S
	2011.05-2016.12		Centre	Van RWD CKTC	without gasket	Center Bearing Support Kit	538693S
2.0 (105 kw)	2011.10-2016.12	6MT	Rear	Chassis Cabin RWD CKUC	Wheelbase:4325 mm	Propshaft	PS901368
	2011.10-2016.12	6MT	Rear	Van RWD CKUC	Wheelbase:4325 mm	Propshaft	PS901368
	2011.10-2016.12	6MT	Rear	Chassis Cabin RWD CKUC	for PR number:0R0,Wheelbase: 3665 mm	Propshaft	PS901684
	2011.10-2016.12		Centre	Chassis Cabin RWD CKUC	Installation size:197mm	Center Bearing Support	538627
	2011.10-2016.12		Centre	Van RWD CKUC	Installation size:197mm	Center Bearing Support	538627
	2011.10-2016.12		Centre	Chassis Cabin RWD CKUC	Installation size:194mm	Center Bearing Support	538635
	2011.10-2016.12		Centre	Van RWD CKUC	Installation size:194mm	Center Bearing Support	538635
	2011.10-2016.12		Centre	Chassis Cabin RWD CKUC	with gasket	Center Bearing Support Kit	538680S
	2011.10-2016.12		Centre	Van RWD CKUC	with gasket	Center Bearing Support Kit	538680S
	2011.10-2016.12		Centre	Chassis Cabin RWD CKUC	without gasket	Center Bearing Support Kit	538693S
	2011.10-2016.12		Centre	Van RWD CKUC	without gasket	Center Bearing Support Kit	538693S
	2011.10-2016.12		Front	Chassis Cabin RWD CKUC		Flexible Coupling	538515
	2011.10-2016.12		Front	Van RWD CKUC		Flexible Coupling	538515
2.0 (120 kw)	2011.07-2016.12	6MT	Rear	Bus RWD CKUB	Date from:2012.02,Wheelbase:3665 mm,For PR code:0R0/1AB/1AF	Propshaft	PS901363
	2011.07-2016.12	6MT	Rear	Chassis Cabin RWD CKUB	Date in:2011.06Not for Engine Code:CKAA,Wheelbase:5905 mm,For PR code:0R0,Date from:2012.02,Wheelbase:5905 mm,For PR code:0R0/1AB/1AF	Propshaft	PS901363
	2011.07-2016.12	6MT	Rear	Van RWD CKUB/CSNA	Date in:2011.06Not for Engine Code:CKAA,Wheelbase:5905 mm,For PR code:0R0,Date from:2012.02,Wheelbase:5905 mm,For PR code:0R0/1AB/1AF	Propshaft	PS901363
	2011.07-2016.12	6MT	Rear	Chassis Cabin RWD CKUB	Wheelbase:4325 mm	Propshaft	PS901368
	2011.07-2016.12	6MT	Rear	Van RWD CKUB/CSNA	Engine Code:CKUB/CSNA,Wheelbase:4325 mm	Propshaft	PS901368
	2011.07-2016.12		Centre	Bus RWD CKUB	Installation size:197mm	Center Bearing Support	538627
	2011.07-2016.12		Centre	Chassis Cabin RWD CKUB	Installation size:197mm	Center Bearing Support	538627
	2011.07-2016.12		Centre	Van RWD CKUB/CSNA	Installation size:197mm	Center Bearing Support	538627
	2011.07-2016.12		Centre	Bus RWD CKUB	Installation size:194mm	Center Bearing Support	538635
	2011.07-2016.12		Centre	Chassis Cabin RWD CKUB	Installation size:194mm	Center Bearing Support	538635
	2011.07-2016.12		Centre	Van RWD CKUB/CSNA	Installation size:194mm	Center Bearing Support	538635
	2011.07-2016.12		Centre	Bus RWD CKUB	with gasket	Center Bearing Support Kit	538680S
	2011.07-2016.12		Centre	Chassis Cabin RWD CKUB	with gasket	Center Bearing Support Kit	538680S
	2011.07-2016.12		Centre	Van RWD CKUB/CSNA	with gasket	Center Bearing Support Kit	538680S
	2011.07-2016.12		Centre	Bus RWD CKUB	without gasket	Center Bearing Support Kit	538693S
	2011.07-2016.12		Centre	Chassis Cabin RWD CKUB	without gasket	Center Bearing Support Kit	538693S
	2011.07-2016.12		Centre	Van RWD CKUB/CSNA	without gasket	Center Bearing Support Kit	538693S
	2011.07-2016.12		Front	Bus RWD CKUB		Flexible Coupling	538515
	2011.07-2016.12		Front	Chassis Cabin RWD CKUB		Flexible Coupling	538515
	2011.07-2016.12		Front	Van RWD CKUB/CSNA		Flexible Coupling	538515
2.5 (65 kw)	2006.04-2011.07		Centre	Chassis Cabin RWD BJJ/CEBA	Installation size:197mm	Center Bearing Support	538627
	2006.04-2011.07		Centre	Van RWD BJJ/CEBA	Installation size:197mm	Center Bearing Support	538627
	2006.04-2011.07		Centre	Bus RWD BJJ/CEBA	Installation size:197mm	Center Bearing Support	538627
	2006.04-2011.07		Centre	Chassis Cabin RWD BJJ/CEBA	Installation size:194mm	Center Bearing Support	538635

	YEAR	TRANSM.	FITTING POSITION	BODY STYLE & DRIVE TYPE & ENGINE	REMARKS	PRODUCT	GSP Ref.
VW							
Crafter 32							
2.5 (65 kw)	2006.04-2011.07		Centre	Van RWD BJJ/CEBA	Installation size:194mm	Center Bearing Support	538635
	2006.04-2011.07		Centre	Bus RWD BJJ/CEBA	Installation size:194mm	Center Bearing Support	538635
	2006.04-2011.07		Centre	Chassis Cabin RWD BJJ/CEBA	with gasket	Center Bearing Support Kit	538680S
	2006.04-2011.07		Centre	Van RWD BJJ/CEBA	with gasket	Center Bearing Support Kit	538680S
	2006.04-2011.07		Centre	Bus RWD BJJ/CEBA	with gasket	Center Bearing Support Kit	538680S
	2006.04-2011.07		Centre	Chassis Cabin RWD BJJ/CEBA	without gasket	Center Bearing Support Kit	538693S
	2006.04-2011.07		Centre	Van RWD BJJ/CEBA	without gasket	Center Bearing Support Kit	538693S
	2006.04-2011.07		Centre	Bus RWD BJJ/CEBA	without gasket	Center Bearing Support Kit	538693S
2.5 (80 kw)	2006.04-2013.05	6MT	Rear	Bus RWD BJK/CEBB	Date to:2006.10,For Engine Code:BJK,Wheelbase:3665 mm,For PR code:0R0/K4A	Propshaft	PS900368
	2006.04-2013.05	6MT	Rear	Bus RWD BJK/CEBB	Date from:2006.08,For Engine Code:BJK,Wheelbase:3665 mm,For PR code:0R0/0WC/0WL/K4A/1SA/1UB/1UC/1UM/1UU	Propshaft	PS900368
	2006.04-2013.05	6MT	Rear	Bus RWD BJK/CEBB	Date from:2006.08,For Engine Code:BJK,Wheelbase:3665 mm,For PR code:0R0/0WC/0WL/K4D/1SA/1UA/1UB/1UC/1UM/1UU	Propshaft	PS900368
	2006.04-2013.05	6MT	Rear	Bus RWD BJK/CEBB	Note:NEW Alpha Trak PRM Wheelbase:3665 mm,Only available with Alpha Trak PRM Wheelbase:3665 mm,Not available with Alpha Trak PRM Wheelbase:4325 mm	Propshaft	PS900550
	2006.04-2013.05	6MT	Rear	Bus RWD BJK/CEBB	For Engine Code:CEBB,Wheelbase:3665 mm,For PR code:0R0/0WC/0WL/K4A/1SA/1UB/1UC/1UM/1UU	Propshaft	PS901365
	2006.04-2013.05	6MT	Rear	Bus RWD BJK/CEBB	Date to:2009.07,For Engine Code:CEBB,Wheelbase:3665 mm,For PR code:0R0/0WC/0WL/K4F/K4D/1SA/1UB/1UC/1UM/1UU	Propshaft	PS901365
	2006.04-2013.05	6MT	Rear	Bus RWD BJK/CEBB	Date from:2009.08,For Engine Code:CEBB,Wheelbase:3665 mm,For PR code:0R0/0WC/0WL/K4D/1SA/1MF/1UA/1UB/1UC/1UU/1UX	Propshaft	PS901365
	2006.04-2013.05	6MT	Rear	Bus RWD BJK/CEBB	Date from:2009.08,For Engine Code:CEBB,Wheelbase:3665 mm,For PR code:0R0/0WC/0WL/K4D/1DD/1DR/1MB/1MS/1MT	Propshaft	PS901365
	2006.04-2013.05	6MT	Rear	Bus RWD BJK/CEBB	For Engine Code:BJK,For PR code:1UV,Wheelbase:4325 mm	Propshaft	PS901368
	2006.04-2013.05	6MT	Rear	Bus RWD BJK/CEBB	For Engine Code:CEBB,For PR code:0WC/1UV/1SB/1SD,Wheelbase:4325 mm	Propshaft	PS901368
	2006.04-2013.05	6MT	Rear	Bus RWD BJK/CEBB	Date from:2008.08,For Engine Code:BJK,For PR code:0WC/1SB/1SD,Wheelbase:4325 mm	Propshaft	PS901368
	2006.04-2013.05	6MT	Rear	Bus RWD BJK/CEBB	Date to:2010.12,Not For Engine code:BJK,for PR code:0WC/1UA/1UB/1UC/1UM/0R0/0WL/1UU,Wheelbase:3290 mm	Propshaft	PS901370
	2006.04-2013.05		Centre	Bus RWD BJK/CEBB	Installation size:197mm	Center Bearing Support	538627
	2006.04-2013.05		Centre	Van RWD BJK/CEBB	Installation size:197mm	Center Bearing Support	538627
	2006.04-2013.05		Centre	Chassis Cabin RWD BJK/CEBB	Installation size:197mm	Center Bearing Support	538627
	2006.04-2013.05		Centre	Bus RWD BJK/CEBB	Installation size:194mm	Center Bearing Support	538635
	2006.04-2013.05		Centre	Van RWD BJK/CEBB	Installation size:194mm	Center Bearing Support	538635
	2006.04-2013.05		Centre	Chassis Cabin RWD BJK/CEBB	Installation size:194mm	Center Bearing Support	538635
	2006.04-2013.05		Centre	Bus RWD BJK/CEBB	with gasket	Center Bearing Support Kit	538680S
	2006.04-2013.05		Centre	Van RWD BJK/CEBB	with gasket	Center Bearing Support Kit	538680S
	2006.04-2013.05		Centre	Chassis Cabin RWD BJK/CEBB	with gasket	Center Bearing Support Kit	538680S
	2006.04-2013.05		Centre	Bus RWD BJK/CEBB	without gasket	Center Bearing Support Kit	538693S
	2006.04-2013.05		Centre	Van RWD BJK/CEBB	without gasket	Center Bearing Support Kit	538693S
	2006.04-2013.05		Centre	Chassis Cabin RWD BJK/CEBB	without gasket	Center Bearing Support Kit	538693S
2.5 (100 kw)	2006.04-2013.05		Centre	Chassis Cabin RWD BJL/CECA	Installation size:197mm	Center Bearing Support	538627
	2006.04-2013.05		Centre	Van RWD BJL/CECA	Installation size:197mm	Center Bearing Support	538627
	2006.04-2013.05		Centre	Chassis Cabin RWD BJL/CECA	Installation size:194mm	Center Bearing Support	538635
	2006.04-2013.05		Centre	Van RWD BJL/CECA	Installation size:194mm	Center Bearing Support	538635
	2006.04-2013.05		Centre	Chassis Cabin RWD BJL/CECA	with gasket	Center Bearing Support Kit	538680S
	2006.04-2013.05		Centre	Van RWD BJL/CECA	with gasket	Center Bearing Support Kit	538680S
	2006.04-2013.05		Centre	Chassis Cabin RWD BJL/CECA	without gasket	Center Bearing Support Kit	538693S
	2006.04-2013.05		Centre	Van RWD BJL/CECA	without gasket	Center Bearing Support Kit	538693S
2.5 (120 kw)	2006.04-2011.07	MT	Front	Van RWD BJM/CECB	Engine Code:BJM,Wheelbase:4325 mm,For PR code:0R0	Propshaft	PS901674
	2006.04-2011.07	MT	Front	Chassis Cabin RWD BJM/CECB	Not for Engine Code:CECB,Wheelbase:4325 mm,For PR code:0R0	Propshaft	PS901674
	2006.04-2011.07	6MT	Rear	Van RWD BJM/CECB	Engine Code:BJM,Wheelbase:4325 mm	Propshaft	PS901368
	2006.04-2011.07	6MT	Rear	Chassis Cabin RWD BJM/CECB	Not for Engine Code:BJM/CECB,Wheelbase:4325 mm	Propshaft	PS901368
	2006.04-2011.07	MT	Rear	Van RWD BJM/CECB	Engine Code:BJM,Wheelbase:3665 mm,For PR code:0R0/K4A	Propshaft	PS901362
	2006.04-2011.07	MT	Rear	Chassis Cabin RWD BJM/CECB	Not for Engine Code:CECB,Wheelbase:3665 mm,For PR code:K4A/0R0	Propshaft	PS901362
	2006.04-2011.07		Centre	Van RWD BJM/CECB	Installation size:197mm	Center Bearing Support	538627
	2006.04-2011.07		Centre	Chassis Cabin RWD BJM/CECB	Installation size:197mm	Center Bearing Support	538627
	2006.04-2011.07		Centre	Van RWD BJM/CECB	Installation size:194mm	Center Bearing Support	538635
	2006.04-2011.07		Centre	Chassis Cabin RWD BJM/CECB	Installation size:194mm	Center Bearing Support	538635
	2006.04-2011.07		Centre	Van RWD BJM/CECB	with gasket	Center Bearing Support Kit	538680S
	2006.04-2011.07		Centre	Chassis Cabin RWD BJM/CECB	with gasket	Center Bearing Support Kit	538680S
	2006.04-2011.07		Centre	Van RWD BJM/CECB	without gasket	Center Bearing Support Kit	538693S
	2006.04-2011.07		Centre	Chassis Cabin RWD BJM/CECB	without gasket	Center Bearing Support Kit	538693S
Crafter 35							
2.0 (80 kw)	2011.05-2016.12	6MT	Rear	Bus RWD CKTB/CSLA	For Model code:Crafter 35,Wheelbase:4325 mm,For PR code: 1SA/1UA/1UB/1UC/1UM/1UU	Propshaft	PS900367
	2011.05-2016.12	6MT	Rear	Chassis Cabin RWD CKTB/CSLA	For Model code:Crafter 35,Wheelbase:4325 mm,For PR code: 1SA/1UA/1UB/1UC/1UM/1UU	Propshaft	PS900367
	2011.05-2016.12	6MT	Rear	Van RWD CKTB/CSLA	For Model code:Crafter 35,Wheelbase:4325 mm,For PR code: 1SA/1UA/1UB/1UC/1UM/1UU	Propshaft	PS900367
	2011.05-2016.12	6MT	Rear	Bus RWD CKTB/CSLA	For Model code:Crafter 35,Wheelbase:3665 mm,For PR code:0WC/0R0/1SA/1UA/1UB/1UC/1UM/1UU/0WL	Propshaft	PS900370
	2011.05-2016.12	6MT	Rear	Chassis Cabin RWD CKTB/CSLA	For Model code:Crafter 35,Wheelbase:3665 mm,For PR code:0WC/0R0/1SA/1UA/1UB/1UC/1UM/1UU/0WL	Propshaft	PS900370
	2011.05-2016.12	6MT	Rear	Van RWD CKTB/CSLA	For Model code:Crafter 35,Wheelbase:3665 mm,For PR code:0WC/0R0/1SA/1UA/1UB/1UC/1UM/1UU/0WL	Propshaft	PS900370
	2011.05-2016.12	6MT	Rear	Bus RWD CKTB/CSLA	For Model code:Crafter 35,For PR code:1SB/1SD/1UV,Wheelbase:4325 mm	Propshaft	PS901368
	2011.05-2016.12	6MT	Rear	Chassis Cabin RWD CKTB/CSLA	For Model code:Crafter 35,For PR code:1SB/1SD/1UV,Wheelbase:4325 mm	Propshaft	PS901368
	2011.05-2016.12	6MT	Rear	Van RWD CKTB/CSLA	For Model code:Crafter 35,for PR code:1SB,1SD,1UV,Wheelbase:4325 mm	Propshaft	PS901368

	YEAR	TRANSM.	FITTING POSITION	BODY STYLE & DRIVE TYPE & ENGINE	REMARKS	PRODUCT	GSP Ref.
VW **Crafter 35**							
2.0 (80 kw)	2011.05-2016.12	6MT	Rear	Bus RWD CKTB/CSLA	for PR number:0R0,1SB,1SD,0WC,1UV,Wheelbase: 3665 mm	Propshaft	PS901684
	2011.05-2016.12	6MT	Rear	Chassis Cabin RWD CKTB/CSLA	For Model code:Crafter 35,for PR number:0WC,0R0,1UV,Wheelbase: 3665 mm	Propshaft	PS901684
	2011.05-2016.12	6MT	Rear	Van RWD CKTB/CSLA	for PR number:0R0,1SB,1SD,0WC,1UV,Wheelbase: 3665 mm	Propshaft	PS901684
	2011.05-2016.12		Centre	Bus RWD CKTB/CSLA	Installation size:197mm	Center Bearing Support	538627
	2011.05-2016.12		Centre	Chassis Cabin RWD CKTB/CSLA	Installation size:197mm	Center Bearing Support	538627
	2011.05-2016.12		Centre	Van RWD CKTB/CSLA	Installation size:197mm	Center Bearing Support	538627
	2011.05-2016.12		Centre	Bus RWD CKTB/CSLA	Installation size:194mm	Center Bearing Support	538635
	2011.05-2016.12		Centre	Chassis Cabin RWD CKTB/CSLA	Installation size:194mm	Center Bearing Support	538635
	2011.05-2016.12		Centre	Van RWD CKTB/CSLA	Installation size:194mm	Center Bearing Support	538635
	2011.05-2016.12		Centre	Bus RWD CKTB/CSLA	with gasket	Center Bearing Support Kit	538680S
	2011.05-2016.12		Centre	Chassis Cabin RWD CKTB/CSLA	with gasket	Center Bearing Support Kit	538680S
	2011.05-2016.12		Centre	Van RWD CKTB/CSLA	with gasket	Center Bearing Support Kit	538680S
	2011.05-2016.12		Centre	Bus RWD CKTB/CSLA	without gasket	Center Bearing Support Kit	538693S
	2011.05-2016.12		Centre	Chassis Cabin RWD CKTB/CSLA	without gasket	Center Bearing Support Kit	538693S
	2011.05-2016.12		Centre	Van RWD CKTB/CSLA	without gasket	Center Bearing Support Kit	538693S
2.0 (84 kw)	2013.11-2016.12	6MT	Rear	Bus RWD CSLB	For Model code:Crafter 35,Wheelbase:4325 mm	Propshaft	PS901368
	2013.11-2016.12	6MT	Rear	Van RWD CSLB	Wheelbase:4325 mm	Propshaft	PS901368
	2013.11-2016.12	6MT	Rear	Chassis Cabin RWD CSLB	Wheelbase:4325 mm	Propshaft	PS901368
	2013.11-2016.12	6MT	Rear	Bus RWD CSLB	for PR number:0R0,Wheelbase: 3665 mm	Propshaft	PS901684
	2013.11-2016.12	6MT	Rear	Van RWD CSLB	for PR number:0R0,Wheelbase: 3665 mm	Propshaft	PS901684
	2013.11-2016.12	6MT	Rear	Chassis Cabin RWD CSLB	for PR number:0R0,Wheelbase: 3665 mm	Propshaft	PS901684
	2013.11-2016.12		Centre	Bus RWD CSLB	Installation size:197mm	Center Bearing Support	538627
	2013.11-2016.12		Centre	Van RWD CSLB	Installation size:197mm	Center Bearing Support	538627
	2013.11-2016.12		Centre	Chassis Cabin RWD CSLB	Installation size:197mm	Center Bearing Support	538627
	2013.11-2016.12		Centre	Bus RWD CSLB	Installation size:194mm	Center Bearing Support	538635
	2013.11-2016.12		Centre	Van RWD CSLB	Installation size:194mm	Center Bearing Support	538635
	2013.11-2016.12		Centre	Chassis Cabin RWD CSLB	Installation size:194mm	Center Bearing Support	538635
	2013.11-2016.12		Centre	Bus RWD CSLB		Center Bearing Support Kit	538693S
	2013.11-2016.12		Centre	Van RWD CSLB		Center Bearing Support Kit	538693S
	2013.11-2016.12		Centre	Chassis Cabin RWD CSLB		Center Bearing Support Kit	538693S
2.0 (100 kw)	2011.05-2016.12	6MT	Rear	Bus RWD CKTC	For Model code:Crafter 35,Wheel base:4325 mm,For PR code:1SA/1UA/1UB/1UC/1UM/1UU	Propshaft	PS900367
	2011.05-2016.12	6MT	Rear	Chassis Cabin RWD CKTC	For Model code:Crafter 35,Wheel base:4325 mm,For PR code:1SA/1UA/1UB/1UC/1UM/1UU	Propshaft	PS900367
	2011.05-2016.12	6MT	Rear	Bus RWD CKTC	For Model code:Crafter 35,Wheelbase:3665 mm,For PR code:0WC/0R0/1SA/1UA/1UB/1UC/1UM/1UU/0WL	Propshaft	PS900370
	2011.05-2016.12	6MT	Rear	Chassis Cabin RWD CKTC	For Model code:Crafter 35,wheel base:3665 mm,For PR code:0WC/0R0/1SA/1UA/1UB/1UC/1UM/1UU/0WL	Propshaft	PS900370
	2011.05-2016.12	6MT	Rear	Bus RWD CKTC	For Model code:Crafter 35,For PR code:1SB/1SD/1UV,Wheelbase:4325 mm	Propshaft	PS901368
	2011.05-2016.12	6MT	Rear	Chassis Cabin RWD CKTC	For Model code:Crafter 35,For PR code:1SB,1SD,1UV,Wheelbase:4325 mm	Propshaft	PS901368
	2011.05-2016.12	6MT	Rear	Van RWD CKTC	For Model code:Crafter 35,for PR code:1SB/1SD/1UV,Wheelbase:4325 mm	Propshaft	PS901368
	2011.05-2016.12	6MT	Rear	Bus RWD CKTC	for PR number:0R0,1SB,1SD,0WC,1UV,Wheelbase: 3665 mm	Propshaft	PS901684
	2011.05-2016.12	6MT	Rear	Chassis Cabin RWD CKTC	for PR number:0R0,1SB,1SD,0WC,1UV,Wheelbase: 3665 mm	Propshaft	PS901684
	2011.05-2016.12	6MT	Rear	Van RWD CKTC	For Model code:Crafter 35,for PR number:0WC,0R0,1UV,Wheelbase: 3665 mm	Propshaft	PS901684
	2011.05-2016.12	6MT	Rear	Van RWD CKTC	Model:Crafter 30/35,Wheelbase:3250 mm,PR Code:0WL,0R0,1SA	Propshaft	PS901829
	2011.05-2016.12	AT	Rear	Bus RWD CKTC		Propshaft	PS900631
	2011.05-2016.12	AT	Rear	Chassis Cabin RWD CKTC		Propshaft	PS900631
	2011.05-2016.12	AT	Rear	Van RWD CKTC		Propshaft	PS900631
	2011.05-2016.12	MT	Rear	Van RWD CKTC	Model:Crafter 35,Wheel base:4325 mm,For PR code:1SA/1UA/1UB/1UC/1UM/1UU,for OE No.:2E0521201	Propshaft	PS900367
	2011.05-2016.12	MT	Rear	Van RWD CKTC	wheel base:3665 mm,For PR code:0WC/0R0/1SA/1UA/1UB/1UC/1UM/1UU/0WL	Propshaft	PS900370
	2011.05-2016.12	MT	Rear	Van RWD CKTC	Model:Crafter 35,Wheel base:4325 mm,For PR code:1SA/1UA/1UB/1UC/1UM/1UU/1UV OE No.:2E0521116XQ	Propshaft	PS901591
	2011.05-2016.12		Centre	Bus RWD CKTC	Installation size:197mm	Center Bearing Support	538627
	2011.05-2016.12		Centre	Chassis Cabin RWD CKTC	Installation size:197mm	Center Bearing Support	538627
	2011.05-2016.12		Centre	Van RWD CKTC	Installation size:197mm	Center Bearing Support	538627
	2011.05-2016.12		Centre	Bus RWD CKTC	Installation size:194mm	Center Bearing Support	538635
	2011.05-2016.12		Centre	Chassis Cabin RWD CKTC	Installation size:194mm	Center Bearing Support	538635
	2011.05-2016.12		Centre	Van RWD CKTC	Installation size:194mm	Center Bearing Support	538635
	2011.05-2016.12		Centre	Bus RWD CKTC	with gasket	Center Bearing Support Kit	538680S
	2011.05-2016.12		Centre	Chassis Cabin RWD CKTC	with gasket	Center Bearing Support Kit	538680S
	2011.05-2016.12		Centre	Van RWD CKTC	with gasket	Center Bearing Support Kit	538680S
	2011.05-2016.12		Centre	Bus RWD CKTC	without gasket	Center Bearing Support Kit	538693S
	2011.05-2016.12		Centre	Chassis Cabin RWD CKTC	without gasket	Center Bearing Support Kit	538693S
	2011.05-2016.12		Centre	Van RWD CKTC	without gasket	Center Bearing Support Kit	538693S
2.0 (103 kw)	2015.11-2016.12	6MT	Rear	Chassis Cabin RWD CSLC	For Model code:Crafter 35,Wheelbase:4325 mm,For PR code:1SA/1UA/1UB/1UC/1UM/1UU	Propshaft	PS900367
	2015.11-2016.12	6MT	Rear	Van RWD CSLC	For Model code:Crafter 35,Wheelbase:4325 mm,For PR code:1SA/1UA/1UB/1UC/1UM/1UU	Propshaft	PS900367
	2015.11-2016.12	6MT	Rear	Chassis Cabin RWD CSLC	For Model code:Crafter 35,Wheelbase:3665 mm,For PR code:0WC/0R0/1SA/1UA/1UB/1UC/1UM/1UU/0WL	Propshaft	PS900370
	2015.11-2016.12	6MT	Rear	Van RWD CSLC	For Model code:Crafter 35,Wheelbase:3665 mm,For PR code:0WC/0R0/1SA/1UA/1UB/1UC/1UM/1UU/0WL	Propshaft	PS900370
	2015.11-2016.12	6MT	Rear	Chassis Cabin RWD CSLC	For Model code:Crafter 35,For PR code:1SB/1SD/1UV,Wheelbase:4325 mm	Propshaft	PS901368

	YEAR	TRANSM.	FITTING POSITION	BODY STYLE & DRIVE TYPE & ENGINE	REMARKS	PRODUCT	GSP Ref.
VW **Crafter 35**							
2.0 (103 kw)	2015.11-2016.12	6MT	Rear	Van RWD CSLC	For Model code:Crafter 35,for PR code:1SB/1SD/1UV,Wheelbase:4325 mm	Propshaft	PS901368
	2015.11-2016.12	6MT	Rear	Chassis Cabin RWD CSLC	for PR number:0R0,1SB,1SD,0WC,1UV,Wheelbase: 3665 mm	Propshaft	PS901684
	2015.11-2016.12	6MT	Rear	Van RWD CSLC	for PR code:0R0,1SB,1SD,0WC,0R0,1UV,Wheelbase: 3665 mm	Propshaft	PS901684
	2015.11-2016.12	6MT	Rear	Van RWD CSLC	Model:Crafter 30/35,Wheelbase:3250 mm,PR Code:0WL,0R0,1SA	Propshaft	PS901829
	2015.11-2016.12		Centre	Chassis Cabin RWD CSLC	Installation size:197mm	Center Bearing Support	538627
	2015.11-2016.12		Centre	Van RWD CSLC	Installation size:197mm	Center Bearing Support	538627
	2015.11-2016.12		Centre	Chassis Cabin RWD CSLC	Installation size:194mm	Center Bearing Support	538635
	2015.11-2016.12		Centre	Van RWD CSLC	Installation size:194mm	Center Bearing Support	538635
	2015.11-2016.12		Centre	Chassis Cabin RWD CSLC		Center Bearing Support Kit	538693S
	2015.11-2016.12		Centre	Van RWD CSLC		Center Bearing Support Kit	538693S
2.0 (105 kw)	2011.10-2016.12	6MT	Rear	Chassis Cabin RWD CKUC	For Model code:Crafter 30,For PR code:1SA/1UA/1UB/1UC/1UM/1UU,Wheel base:4325 mm,for OE No.:9064101604	Propshaft	PS900367
	2011.10-2016.12	6MT	Rear	Van RWD CKUC	For Model code:Crafter 30,For PR code:1SA/1UA/1UB/1UC/1UM/1UU,Wheel base:4325 mm,for OE No.:9064101604	Propshaft	PS900367
	2011.10-2016.12	6MT	Rear	Chassis Cabin RWD CKUC	Wheelbase:4325 mm;for OE No.:9064100016	Propshaft	PS901368
	2011.10-2016.12	6MT	Rear	Van RWD CKUC	Wheelbase:4325 mm;for OE No.:9064100016	Propshaft	PS901368
	2011.10-2016.12	6MT	Rear	Chassis Cabin RWD CKUC	for PR number:0R0,Wheelbase: 3665 mm	Propshaft	PS901684
	2011.10-2016.12		Centre	Chassis Cabin RWD CKUC	Installation size:197mm	Center Bearing Support	538627
	2011.10-2016.12		Centre	Van RWD CKUC	Installation size:197mm	Center Bearing Support	538627
	2011.10-2016.12		Centre	Bus RWD CKUC		Center Bearing Support	538627
	2011.10-2016.12		Centre	Chassis Cabin RWD CKUC	Installation size:194mm	Center Bearing Support	538635
	2011.10-2016.12		Centre	Van RWD CKUC	Installation size:194mm	Center Bearing Support	538635
	2011.10-2016.12		Centre	Bus RWD CKUC		Center Bearing Support	538635
	2011.10-2016.12		Centre	Chassis Cabin RWD CKUC	with gasket	Center Bearing Support Kit	538680S
	2011.10-2016.12		Centre	Van RWD CKUC	with gasket	Center Bearing Support Kit	538680S
	2011.10-2016.12		Centre	Chassis Cabin RWD CKUC	without gasket	Center Bearing Support Kit	538693S
	2011.10-2016.12		Centre	Van RWD CKUC	without gasket	Center Bearing Support Kit	538693S
	2011.10-2016.12		Centre	Bus RWD CKUC		Center Bearing Support Kit	538693S
	2011.10-2016.12		Front	Chassis Cabin RWD CKUC		Flexible Coupling	538515
	2011.10-2016.12		Front	Van RWD CKUC		Flexible Coupling	538515
	2011.10-2016.12		Front	Bus RWD CKUC		Flexible Coupling	538515
2.0 (120 kw)	2011.05-2016.12	6MT	Rear	Van RWD CKUB/CSNA	Date:to:2011.06;Not for Engine Code:CSNA;Wheelbase:3665 mm;For PR code:0R0;Date from:2012.02;Wheelbase:3665 mm;For PR code:0R0/1AB/1AF	Propshaft	PS901363
	2011.05-2016.12	6MT	Rear	Van RWD CKUB/CSNA	Engine Code:CKUB/CSNA,Wheelbase:4325 mm	Propshaft	PS901368
	2011.05-2016.12	6MT	Rear	Van RWD CKUB/CSNA	Model:Crafter 30/35,Wheelbase:3250 mm,PR Code:0WL,0R0,1SA	Propshaft	PS901829
	2011.05-2016.12		Centre	Van RWD CKUB/CSNA	Installation size:197mm	Center Bearing Support	538627
	2011.05-2016.12		Centre	Van RWD CKUB/CSNA	Installation size:194mm	Center Bearing Support	538635
	2011.05-2016.12		Centre	Van RWD CKUB/CSNA	with gasket	Center Bearing Support Kit	538680S
	2011.05-2016.12		Centre	Van RWD CKUB/CSNA	without gasket	Center Bearing Support Kit	538693S
	2011.05-2016.12		Front	Van RWD CKUB/CSNA		Flexible Coupling	538515
	2011.07-2016.12	MT	Front	Bus 4WD CKUB/CSNA		Propshaft	PS900609
	2011.07-2016.12	MT	Front	Chassis Cabin 4WD CKUB/CSNA		Propshaft	PS900609
	2011.07-2016.12	MT	Front	Van 4WD CKUB/CSNA		Propshaft	PS900609
	2011.07-2016.12	6MT	Rear	Bus RWD CKUB/CSNA	Date from:2012.02,Wheelbase:3665 mm,For PR code:0R0/1AB/1AF	Propshaft	PS901363
	2011.07-2016.12	6MT	Rear	Chassis Cabin RWD CKUB/CSNA	Date:to:2011.06;Not for Engine Code:CSNA;Wheelbase:3665 mm;For PR code:0R0;Date from:2012.02;Wheelbase:3665 mm;For PR code:0R0/1AB/1AF	Propshaft	PS901363
	2011.07-2016.12	6MT	Rear	Bus 4WD CKUB/CSNA	Date from:2012.02,Engine Code:CKUB,CSNA,Wheelbase:3665 mm,For PR code:0R0/1AB/1AF	Propshaft	PS901363
	2011.07-2016.12	6MT	Rear	Chassis Cabin 4WD CKUB/CSNA	Date from:2012.02,Engine Code:CKUB,CSNA,Wheelbase:3665 mm,For PR code:0R0/1AB/1AF	Propshaft	PS901363
	2011.07-2016.12	6MT	Rear	Van 4WD CKUB/CSNA	Date:to:2011.06;Engine Code:CKUB,Wheelbase:3665 mm;For PR code:0R0;Date from:2012.02;Engine Code:CKUB,Wheelbase:3665 mm;For PR code:0R0/1AB/1AF	Propshaft	PS901363
	2011.07-2016.12	6MT	Rear	Bus RWD CKUB/CSNA	For Model code:Crafter 35,Wheelbase:4325 mm	Propshaft	PS901368
	2011.07-2016.12	6MT	Rear	Chassis Cabin RWD CKUB/CSNA	Wheelbase:4325 mm	Propshaft	PS901368
	2011.07-2016.12	6MT	Rear	Bus 4WD CKUB/CSNA	Wheelbase:4325 mm	Propshaft	PS901368
	2011.07-2016.12	6MT	Rear	Chassis Cabin 4WD CKUB/CSNA	Engine Code:CKUB/CSNA,Wheelbase:4325 mm	Propshaft	PS901368
	2011.07-2016.12	6MT	Rear	Van 4WD CKUB/CSNA	Engine Code:CKUB/CSNA,Wheelbase:4325 mm	Propshaft	PS901368
	2011.07-2016.12		Centre	Bus RWD CKUB/CSNA	Installation size:197mm	Center Bearing Support	538627
	2011.07-2016.12		Centre	Chassis Cabin RWD CKUB/CSNA	Installation size:197mm	Center Bearing Support	538627
	2011.07-2016.12		Centre	Bus 4WD CKUB/CSNA	Installation size:197mm	Center Bearing Support	538627
	2011.07-2016.12		Centre	Chassis Cabin 4WD CKUB/CSNA	Installation size:197mm	Center Bearing Support	538627
	2011.07-2016.12		Centre	Van 4WD CKUB/CSNA	Installation size:197mm	Center Bearing Support	538627
	2011.07-2016.12		Centre	Bus RWD CKUB/CSNA	Installation size:194mm	Center Bearing Support	538635
	2011.07-2016.12		Centre	Chassis Cabin RWD CKUB/CSNA	Installation size:194mm	Center Bearing Support	538635
	2011.07-2016.12		Centre	Bus 4WD CKUB/CSNA	Installation size:194mm	Center Bearing Support	538635
	2011.07-2016.12		Centre	Chassis Cabin 4WD CKUB/CSNA	Installation size:194mm	Center Bearing Support	538635
	2011.07-2016.12		Centre	Van 4WD CKUB/CSNA	Installation size:194mm	Center Bearing Support	538635
	2011.07-2016.12		Centre	Bus RWD CKUB/CSNA	with gasket	Center Bearing Support Kit	538680S
	2011.07-2016.12		Centre	Chassis Cabin RWD CKUB/CSNA	with gasket	Center Bearing Support Kit	538680S
	2011.07-2016.12		Centre	Bus 4WD CKUB/CSNA	with gasket	Center Bearing Support Kit	538680S
	2011.07-2016.12		Centre	Van 4WD CKUB/CSNA	with gasket	Center Bearing Support Kit	538680S

	YEAR	TRANSM.	FITTING POSITION	BODY STYLE & DRIVE TYPE & ENGINE	REMARKS	PRODUCT	GSP Ref.
VW **Crafter 35**							
2.0 (120 kw)	2011.07-2016.12		Centre	Bus RWD CKUB/CSNA	without gasket	Center Bearing Support Kit	538693S
	2011.07-2016.12		Centre	Chassis Cabin RWD CKUB/CSNA	without gasket	Center Bearing Support Kit	538693S
	2011.07-2016.12		Centre	Bus 4WD CKUB/CSNA	without gasket	Center Bearing Support Kit	538693S
	2011.07-2016.12		Centre	Chassis Cabin 4WD CKUB/CSNA		Center Bearing Support Kit	538693S
	2011.07-2016.12		Centre	Van 4WD CKUB/CSNA	without gasket	Center Bearing Support Kit	538693S
	2011.07-2016.12		Front	Bus RWD CKUB/CSNA		Flexible Coupling	538515
	2011.07-2016.12		Front	Chassis Cabin RWD CKUB/CSNA		Flexible Coupling	538515
	2011.07-2016.12		Front	Bus 4WD CKUB/CSNA		Flexible Coupling	538515
	2011.07-2016.12		Front	Chassis Cabin 4WD CKUB/CSNA		Flexible Coupling	538515
	2011.07-2016.12		Front	Van 4WD CKUB/CSNA		Flexible Coupling	538515
2.5 (65 kw)	2006.04-2011.07	6MT	Rear	Van RWD BJJ/CEBA	For model:crafter30/crafter30,Engine code:BJJ,Wheel base:3665 mm	Propshaft	PS901986
	2006.04-2011.07		Centre	Bus RWD BJJ/CEBA	Installation size:197mm	Center Bearing Support	538627
	2006.04-2011.07		Centre	Chassis Cabin RWD BJJ/CEBA	Installation size:197mm	Center Bearing Support	538627
	2006.04-2011.07		Centre	Van RWD BJJ/CEBA	Installation size:197mm	Center Bearing Support	538627
	2006.04-2011.07		Centre	Bus RWD BJJ/CEBA	Installation size:194mm	Center Bearing Support	538635
	2006.04-2011.07		Centre	Chassis Cabin RWD BJJ/CEBA	Installation size:194mm	Center Bearing Support	538635
	2006.04-2011.07		Centre	Van RWD BJJ/CEBA	Installation size:194mm	Center Bearing Support	538635
	2006.04-2011.07		Centre	Bus RWD BJJ/CEBA	with gasket	Center Bearing Support Kit	538680S
	2006.04-2011.07		Centre	Chassis Cabin RWD BJJ/CEBA	with gasket	Center Bearing Support Kit	538680S
	2006.04-2011.07		Centre	Van RWD BJJ/CEBA	with gasket	Center Bearing Support Kit	538680S
	2006.04-2011.07		Centre	Bus RWD BJJ/CEBA	without gasket	Center Bearing Support Kit	538693S
	2006.04-2011.07		Centre	Chassis Cabin RWD BJJ/CEBA	without gasket	Center Bearing Support Kit	538693S
	2006.04-2011.07		Centre	Van RWD BJJ/CEBA	without gasket	Center Bearing Support Kit	538693S
2.5 (80 kw)	2006.04-2013.05	6MT	Front	Bus RWD BJK/CEBB	Date from:2009.06,For Model code:Crafter 35,Engine Code:BJK,Wheelbase:4325mm,For PR code:0R0	Propshaft	PS900365
	2006.04-2013.05	6MT	Rear	Bus RWD BJK/CEBB	For Model code:Crafter 35,Wheelbase:4325 mm,For PR code:1SA/1UA/1UB/1UC/1UM/1UJ,For Engine Code:CEBB,BJK	Propshaft	PS900367
	2006.04-2013.05	6MT	Rear	Bus RWD BJK/CEBB	Date to:2006.10,Engine Code:BJK,Wheelbase:3665 mm,For PR code:0R0/K4A	Propshaft	PS900368
	2006.04-2013.05	6MT	Rear	Bus RWD BJK/CEBB	Date to:2006.10,For Model code:Crafter 35,Engine Code:BJK,Wheelbase:3665 mm,For PR code:0R0/K4G	Propshaft	PS900368
	2006.04-2013.05	6MT	Rear	Bus RWD BJK/CEBB	Date from:2006.06,Engine Code:BJK,Wheelbase:3665 mm,For PR code:0R0/0WC/0WL/K4A/1SA/1UA/1UB/1UC/1UM/1UJ	Propshaft	PS900368
	2006.04-2013.05	6MT	Rear	Bus RWD BJK/CEBB	Date from:2006.10,For Model code:Crafter 35,Engine Code:BJK,Wheelbase:3665 mm,For PR code:0R0/0WC/0WL/K4G/1SA/1UA/1UB/1UC/1UM/1UJ	Propshaft	PS900368
	2006.04-2013.05	6MT	Rear	Bus RWD BJK/CEBB	Date from:2006.06,Engine Code:BJK,Wheelbase:3665 mm,For PR code:0R0/0WC/0WL/K4G/1SA/1UA/1UB/1UC/1UM/1UJ	Propshaft	PS900368
	2006.04-2013.05	6MT	Rear	Bus RWD BJK/CEBB	Date from:2011.01,For Model code:Crafter 35,Engine Code:CEBB,Wheelbase:3665 mm,For PR code:0R0/0WC/0WL/0WU/0WX/1UA/1UB/1UC/1UM/1UJ	Propshaft	PS900368
	2006.04-2013.05	6MT	Rear	Bus RWD BJK/CEBB	Date to:2010.12,For Engine Code:CEBB,Wheelbase:3665 mm,For PR code:0R0/0WC/K4A/K4B/K4F/K4G/1MA/1UJ	Propshaft	PS900550
	2006.04-2013.05	6MT	Rear	Bus RWD BJK/CEBB	For Model code:Crafter 35,For Engine Code:CEBB,Wheelbase:3665 mm,For PR code:0R0/0WC/0WL/K4A/1SA/1UB/1UC	Propshaft	PS901365
	2006.04-2013.05	6MT	Rear	Bus RWD BJK/CEBB	Date from:2009.06,For Model code:Crafter 35,For Engine Code:BJK,For PR code:0R0/0WC/0WL/K4A/1SA/1UA/1UB/1UC/1UM/1UJ,Wheelbase:3365 mm	Propshaft	PS901367
	2006.04-2013.05	6MT	Rear	Bus RWD BJK/CEBB	Date to:2006.10,For Model code:Crafter 35,For Engine Code:BJK,For PR code:0R0/0WC/0WL/K4G/1SA/1UA/1UB/1UC/1UM/1UJ,Wheelbase:3365 mm	Propshaft	PS901367
	2006.04-2013.05	6MT	Rear	Bus RWD BJK/CEBB	Date to:2006.12,For Model code:Crafter 35,For Engine Code:BJK,For PR code:0R0/0WC/0WL/1JB/1UC/1UM/1UA/1UJ,Wheelbase:3365 mm	Propshaft	PS901367
	2006.04-2013.05	6MT	Rear	Bus RWD BJK/CEBB	Date from:2006.11,For Model code:Crafter 35,For Engine Code:BJK,For PR code:0R0/0WC/0WL/1JB/1UC/1UM/1UA/1UJ,Wheelbase:3365 mm	Propshaft	PS901367
	2006.04-2013.05	6MT	Rear	Bus RWD BJK/CEBB	For Engine Code:BJK,For PR code:1UV,Wheelbase:4325 mm	Propshaft	PS901368
	2006.04-2013.05	6MT	Rear	Bus RWD BJK/CEBB	For Engine Code:CEBB,For PR code:0WC/1UV/1SB/1SD,Wheelbase:4325 mm	Propshaft	PS901368
	2006.04-2013.05	6MT	Rear	Bus RWD BJK/CEBB	Date from:2008.08,For Engine Code:BJK,For PR code:0WC/1SB/1SD,Wheelbase:4325 mm	Propshaft	PS901368
	2006.04-2013.05	6MT	Rear	Bus RWD BJK/CEBB	Date from:2011.01,For Model code:Crafter 35,For Engine Code:BJK,For PR code:1SB/1SD,Wheelbase:4325 mm	Propshaft	PS901368
	2006.04-2013.05	6MT	Rear	Bus RWD BJK/CEBB	Date to:2010.12,Not For Engine code:BJK,for PR code:0WC/1UA/1UB/1UC/1UM/0R0/0WL/1UJ,Wheelbase:3250 mm	Propshaft	PS901370
	2006.04-2013.05	6MT	Rear	Bus RWD BJK/CEBB	Date from:2011.01,For Model code:Crafter 35,For Engine Code:CEBB,For PR code:0WL/0R0/1SA,Wheelbase:3250 mm	Propshaft	PS901370
	2006.04-2013.05	6MT	Rear	Bus RWD BJK/CEBB	Wheelbase:4325mm,4100mm,3665mm,3365mm,3250mm,Engine Code:BJK,CEBB,For PR code:0R0/0WC/0WL/0WU/0WX/1JB/1SA/1SB/1SD/1SE/1UA/1UB/1UC/1UJ/1UM/1UV	Propshaft	PS901828
	2006.04-2013.05	6MT	Rear	Van RWD BJK/CEBB	For model:crafter30/crafter35,Engine code:BJK,Wheel base:3665 mm	Propshaft	PS901986
	2006.04-2013.05		Centre	Bus RWD BJK/CEBB	Installation size:197mm	Center Bearing Support	538627
	2006.04-2013.05		Centre	Chassis Cabin RWD BJK/CEBB	Installation size:197mm	Center Bearing Support	538627
	2006.04-2013.05		Centre	Van RWD BJK/CEBB	Installation size:197mm	Center Bearing Support	538627
	2006.04-2013.05		Centre	Bus RWD BJK/CEBB	Installation size:194mm	Center Bearing Support	538635
	2006.04-2013.05		Centre	Chassis Cabin RWD BJK/CEBB	Installation size:194mm	Center Bearing Support	538635
	2006.04-2013.05		Centre	Van RWD BJK/CEBB	Installation size:194mm	Center Bearing Support	538635
	2006.04-2013.05		Centre	Bus RWD BJK/CEBB	with gasket	Center Bearing Support Kit	538680S
	2006.04-2013.05		Centre	Chassis Cabin RWD BJK/CEBB	with gasket	Center Bearing Support Kit	538680S
	2006.04-2013.05		Centre	Van RWD BJK/CEBB	with gasket	Center Bearing Support Kit	538680S
	2006.04-2013.05		Centre	Bus RWD BJK/CEBB	without gasket	Center Bearing Support Kit	538693S
	2006.04-2013.05		Centre	Chassis Cabin RWD BJK/CEBB	without gasket	Center Bearing Support Kit	538693S
	2006.04-2013.05		Centre	Van RWD BJK/CEBB	without gasket	Center Bearing Support Kit	538693S
2.5 (100 kw)	2006.04-2013.05	6MT	Rear	Van RWD BJL/CECA	For model:crafter30/crafter35,Engine code:BJL,Wheel base:3665 mm	Propshaft	PS901986
	2006.04-2013.05		Centre	Bus RWD BJL/CECA	Installation size:197mm	Center Bearing Support	538627
	2006.04-2013.05		Centre	Chassis Cabin RWD BJL/CECA	Installation size:197mm	Center Bearing Support	538627
	2006.04-2013.05		Centre	Van RWD BJL/CECA	Installation size:197mm	Center Bearing Support	538627
	2006.04-2013.05		Centre	Bus RWD BJL/CECA	Installation size:194mm	Center Bearing Support	538635
	2006.04-2013.05		Centre	Chassis Cabin RWD BJL/CECA	Installation size:194mm	Center Bearing Support	538635
	2006.04-2013.05		Centre	Van RWD BJL/CECA	Installation size:194mm	Center Bearing Support	538635
	2006.04-2013.05		Centre	Bus RWD BJL/CECA	with gasket	Center Bearing Support Kit	538680S

	YEAR	TRANSM.	FITTING POSITION	BODY STYLE & DRIVE TYPE & ENGINE	REMARKS	PRODUCT	GSP Ref.
VW							
Crafter 35							
2.5 (100 kw)	2006.04-2013.05		Centre	Chassis Cabin RWD BJL/CECA	with gasket	Center Bearing Support Kit	538680S
	2006.04-2013.05		Centre	Van RWD BJL/CECA	with gasket	Center Bearing Support Kit	538680S
	2006.04-2013.05		Centre	Bus RWD BJL/CECA	without gasket	Center Bearing Support Kit	538693S
	2006.04-2013.05		Centre	Chassis Cabin RWD BJL/CECA	without gasket	Center Bearing Support Kit	538693S
	2006.04-2013.05		Centre	Van RWD BJL/CECA	without gasket	Center Bearing Support Kit	538693S
2.5 (120 kw)	2006.04-2011.07	MT	Front	Bus RWD BJM/CECB	Engine Code:BJM,Wheelbase:4325 mm,For PR code:0R0	Propshaft	PS901674
	2006.04-2011.07	MT	Front	Chassis Cabin RWD BJM/CECB	Not for Engine Code:CECB,Wheelbase:4325 mm,For PR code:0R0	Propshaft	PS901674
	2006.04-2011.07	MT	Front	Van RWD BJM/CECB	Engine Code:BJM,Wheelbase:4325 mm,For PR code:0R0	Propshaft	PS901674
	2006.04-2011.07	6MT	Rear	Bus RWD BJM/CECB	Wheelbase:4325 mm	Propshaft	PS901368
	2006.04-2011.07	6MT	Rear	Chassis Cabin RWD BJM/CECB	Not for Engine Code:BJM/CECB,Wheelbase:4325 mm	Propshaft	PS901368
	2006.04-2011.07	6MT	Rear	Van RWD BJM/CECB	Engine Code:BJM,Wheelbase:4325 mm	Propshaft	PS901368
	2006.04-2011.07	MT	Rear	Bus RWD BJM/CECB	For Model code:Crafter 35,Date to:2010.12,For Engine Code:CECB,wheel base:3665 mm,For PR code:0R0/KA0/KF/KG0	Propshaft	PS900550
	2006.04-2011.07	MT	Rear	Chassis Cabin RWD BJM/CECB	Date to:2010.12,For Engine Code:CECB,wheel base:3665 mm,For PR code:K4F/K4G/K4A/SR0	Propshaft	PS900550
	2006.04-2011.07	MT	Rear	Van RWD BJM/CECB	Date to:2010.12,For Engine Code:CECB,wheel base:3665 mm,For PR code:K4F/K4G/K4A/SR0	Propshaft	PS900550
	2006.04-2011.07	MT	Rear	Van RWD BJM/CECB	For Engine Code:CECB,wheel base:4325 mm	Propshaft	PS900558
	2006.04-2011.07	MT	Rear	Bus RWD BJM/CECB	Engine Code:BJM,Wheelbase:3665 mm,For PR code:0R0/K4A	Propshaft	PS901362
	2006.04-2011.07	MT	Rear	Chassis Cabin RWD BJM/CECB	Not for Engine Code:CECB,Wheelbase:3665 mm,For PR code:K4A/0R0	Propshaft	PS901362
	2006.04-2011.07	MT	Rear	Van RWD BJM/CECB	Engine Code:BJM,Wheelbase:3665 mm,For PR code:0R0/K4A	Propshaft	PS901362
	2006.04-2011.07		Centre	Bus RWD BJM/CECB	Installation size:197mm	Center Bearing Support	538627
	2006.04-2011.07		Centre	Chassis Cabin RWD BJM/CECB	Installation size:197mm	Center Bearing Support	538627
	2006.04-2011.07		Centre	Van RWD BJM/CECB	Installation size:197mm	Center Bearing Support	538627
	2006.04-2011.07		Centre	Bus RWD BJM/CECB	Installation size:194mm	Center Bearing Support	538635
	2006.04-2011.07		Centre	Chassis Cabin RWD BJM/CECB	Installation size:194mm	Center Bearing Support	538635
	2006.04-2011.07		Centre	Van RWD BJM/CECB	Installation size:194mm	Center Bearing Support	538635
	2006.04-2011.07		Centre	Bus RWD BJM/CECB	with gasket	Center Bearing Support Kit	538680S
	2006.04-2011.07		Centre	Chassis Cabin RWD BJM/CECB	with gasket	Center Bearing Support Kit	538680S
	2006.04-2011.07		Centre	Van RWD BJM/CECB	with gasket	Center Bearing Support Kit	538680S
	2006.04-2011.07		Centre	Bus RWD BJM/CECB	without gasket	Center Bearing Support Kit	538693S
	2006.04-2011.07		Centre	Chassis Cabin RWD BJM/CECB	without gasket	Center Bearing Support Kit	538693S
	2006.04-2011.07		Centre	Van RWD BJM/CECB	without gasket	Center Bearing Support Kit	538693S
Crafter 46							
2.0 (80 kw)	2011.05-2016.12	6MT	Rear	Chassis Cabin RWD CKTB	Wheelbase:4325 mm	Propshaft	PS901368
	2011.05-2016.12	6MT	Rear	Van RWD CKTB	for PR number:0R0,1SB,1SD,0WC,1UV,Wheelbase: 3665 mm	Propshaft	PS901684
	2011.05-2016.12		Centre	Chassis Cabin RWD CKTB	Installation size:197mm	Center Bearing Support	538627
	2011.05-2016.12		Centre	Van RWD CKTB	Installation size:197mm	Center Bearing Support	538627
	2011.05-2016.12		Centre	Chassis Cabin RWD CKTB	Installation size:194mm	Center Bearing Support	538635
	2011.05-2016.12		Centre	Van RWD CKTB	Installation size:194mm	Center Bearing Support	538635
	2011.05-2016.12		Centre	Chassis Cabin RWD CKTB	with gasket	Center Bearing Support Kit	538680S
	2011.05-2016.12		Centre	Van RWD CKTB	with gasket	Center Bearing Support Kit	538680S
	2011.05-2016.12		Centre	Chassis Cabin RWD CKTB	without gasket	Center Bearing Support Kit	538693S
	2011.05-2016.12		Centre	Van RWD CKTB	without gasket	Center Bearing Support Kit	538693S
2.0 (84 kw)	2013.11-2016.12	6MT	Rear	Van RWD CSLB	Wheelbase:4325 mm	Propshaft	PS901368
	2013.11-2016.12	6MT	Rear	Van RWD CSLB	for PR number:0R0,Wheelbase: 3665 mm	Propshaft	PS901684
	2013.11-2016.12		Centre	Van RWD CSLB	Installation size:197mm	Center Bearing Support	538627
	2013.11-2016.12		Centre	Van RWD CSLB	Installation size:194mm	Center Bearing Support	538635
	2013.11-2016.12		Centre	Van RWD CSLB		Center Bearing Support Kit	538693S
2.0 (100 kw)	2011.05-2016.12	6MT	Rear	Chassis Cabin RWD CKTC	Wheelbase:4325 mm	Propshaft	PS901368
	2011.05-2016.12	6MT	Rear	Chassis Cabin RWD CKTC	for PR number:0R0,1SB,1SD,0WC,1UV,Wheelbase: 3665 mm	Propshaft	PS901684
	2011.05-2016.12	AT	Rear	Van RWD CKTC		Propshaft	PS900631
	2011.05-2016.12	AT	Rear	Chassis Cabin RWD CKTC		Propshaft	PS900631
	2011.05-2016.12		Centre	Van RWD CKTC	Installation size:197mm	Center Bearing Support	538627
	2011.05-2016.12		Centre	Chassis Cabin RWD CKTC	Installation size:197mm	Center Bearing Support	538627
	2011.05-2016.12		Centre	Van RWD CKTC	Installation size:194mm	Center Bearing Support	538635
	2011.05-2016.12		Centre	Chassis Cabin RWD CKTC	Installation size:194mm	Center Bearing Support	538635
	2011.05-2016.12		Centre	Van RWD CKTC	with gasket	Center Bearing Support Kit	538680S
	2011.05-2016.12		Centre	Chassis Cabin RWD CKTC	with gasket	Center Bearing Support Kit	538680S
	2011.05-2016.12		Centre	Van RWD CKTC	without gasket	Center Bearing Support Kit	538693S
	2011.05-2016.12		Centre	Chassis Cabin RWD CKTC	without gasket	Center Bearing Support Kit	538693S
2.0 (105 kw)	2011.10-2016.12	6MT	Rear	Chassis Cabin RWD CKUC	Wheelbase:4325 mm	Propshaft	PS901368
	2011.10-2016.12	6MT	Rear	Van RWD CKUC	Wheelbase:4325 mm	Propshaft	PS901368
	2011.10-2016.12	6MT	Rear	Chassis Cabin RWD CKUC	for PR number:0R0,Wheelbase: 3665 mm	Propshaft	PS901684
	2011.10-2016.12		Centre	Chassis Cabin RWD CKUC	Installation size:197mm	Center Bearing Support	538627
	2011.10-2016.12		Centre	Van RWD CKUC	Installation size:197mm	Center Bearing Support	538627
	2011.10-2016.12		Centre	Chassis Cabin RWD CKUC	Installation size:194mm	Center Bearing Support	538635

	YEAR	TRANSM.	FITTING POSITION	BODY STYLE & DRIVE TYPE & ENGINE	REMARKS	PRODUCT	GSP Ref.
VW **Crafter 46**							
2.0 (105 kw)	2011.10-2016.12		Centre	Van RWD CKUC	Installation size:194mm	Center Bearing Support	538635
	2011.10-2016.12		Centre	Chassis Cabin RWD CKUC	with gasket	Center Bearing Support Kit	538680S
	2011.10-2016.12		Centre	Van RWD CKUC	with gasket	Center Bearing Support Kit	538680S
	2011.10-2016.12		Centre	Chassis Cabin RWD CKUC	without gasket	Center Bearing Support Kit	538693S
	2011.10-2016.12		Centre	Van RWD CKUC	without gasket	Center Bearing Support Kit	538693S
	2011.10-2016.12		Front	Chassis Cabin RWD CKUC		Flexible Coupling	538515
	2011.10-2016.12		Front	Van RWD CKUC		Flexible Coupling	538515
2.0 (120 kw)	2011.07-2016.12	6MT	Rear	Chassis Cabin RWD CKUB	Date to:2011.08,For Model code: Crafter 46,Engine Code:CKUB,Wheelbase:3665 mm,For PR code:0R0	Propshaft	PS901363
	2011.07-2016.12	6MT	Rear	Van RWD CKUB/CSNA	Date to:2011.08 Not for Engine Code:CSNA,Wheelbase:3665 mm,For PR code:0R0 Date from:2012.02 Wheelbase:3665 mm,For PR code:0R0 K4A or	Propshaft	PS901363
	2011.07-2016.12	6MT	Rear	Chassis Cabin RWD CKUB	For Model code:Crafter 46,Engine Code:CKUB/CSNA,Wheelbase:4325 mm	Propshaft	PS901368
	2011.07-2016.12	6MT	Rear	Van RWD CKUB/CSNA	Engine Code:CKUB/CSNA,Wheelbase:4325 mm	Propshaft	PS901368
	2011.07-2016.12		Centre	Chassis Cabin RWD CKUB	Installation size:197mm	Center Bearing Support	538627
	2011.07-2016.12		Centre	Van RWD CKUB/CSNA	Installation size:197mm	Center Bearing Support	538627
	2011.07-2016.12		Centre	Chassis Cabin RWD CKUB	Installation size:194mm	Center Bearing Support	538635
	2011.07-2016.12		Centre	Van RWD CKUB/CSNA	Installation size:194mm	Center Bearing Support	538635
	2011.07-2016.12		Centre	Chassis Cabin RWD CKUB	with gasket	Center Bearing Support Kit	538680S
	2011.07-2016.12		Centre	Van RWD CKUB/CSNA	with gasket	Center Bearing Support Kit	538680S
	2011.07-2016.12		Centre	Chassis Cabin RWD CKUB	without gasket	Center Bearing Support Kit	538693S
	2011.07-2016.12		Centre	Van RWD CKUB/CSNA	without gasket	Center Bearing Support Kit	538693S
	2011.07-2016.12		Front	Chassis Cabin RWD CKUB		Flexible Coupling	538515
	2011.07-2016.12		Front	Van RWD CKUB/CSNA		Flexible Coupling	538515
2.5 (80 kw)	2006.04-2013.05		Centre	Chassis Cabin RWD BJK/CEBB	Installation size:197mm	Center Bearing Support	538627
	2006.04-2013.05		Centre	Van RWD BJK/CEBB	Installation size:197mm	Center Bearing Support	538627
	2006.04-2013.05		Centre	Chassis Cabin RWD BJK/CEBB	Installation size:194mm	Center Bearing Support	538635
	2006.04-2013.05		Centre	Van RWD BJK/CEBB	Installation size:194mm	Center Bearing Support	538635
	2006.04-2013.05		Centre	Chassis Cabin RWD BJK/CEBB	with gasket	Center Bearing Support Kit	538680S
	2006.04-2013.05		Centre	Van RWD BJK/CEBB	with gasket	Center Bearing Support Kit	538680S
	2006.04-2013.05		Centre	Chassis Cabin RWD BJK/CEBB	without gasket	Center Bearing Support Kit	538693S
	2006.04-2013.05		Centre	Van RWD BJK/CEBB	without gasket	Center Bearing Support Kit	538693S
2.5 (100 kw)	2006.04-2013.05		Centre	Chassis Cabin RWD BJL/CECA	Installation size:197mm	Center Bearing Support	538627
	2006.04-2013.05		Centre	Van RWD BJL/CECA	Installation size:197mm	Center Bearing Support	538627
	2006.04-2013.05		Centre	Chassis Cabin RWD BJL/CECA	Installation size:194mm	Center Bearing Support	538635
	2006.04-2013.05		Centre	Van RWD BJL/CECA	Installation size:194mm	Center Bearing Support	538635
	2006.04-2013.05		Centre	Chassis Cabin RWD BJL/CECA	with gasket	Center Bearing Support Kit	538680S
	2006.04-2013.05		Centre	Van RWD BJL/CECA	with gasket	Center Bearing Support Kit	538680S
	2006.04-2013.05		Centre	Chassis Cabin RWD BJL/CECA	without gasket	Center Bearing Support Kit	538693S
	2006.04-2013.05		Centre	Van RWD BJL/CECA	without gasket	Center Bearing Support Kit	538693S
2.5 (120 kw)	2006.04-2011.07	MT	Front	Chassis Cabin RWD BJM/CECB	Not for Engine Code:CECB,Wheelbase:4325 mm,For PR code:0R0	Propshaft	PS901674
	2006.04-2011.07	MT	Front	Van RWD BJM/CECB	Engine Code:BJM,Wheelbase:4325 mm,For PR code:0R0	Propshaft	PS901674
	2006.04-2011.07	6MT	Rear	Chassis Cabin RWD BJM/CECB	Not for Engine Code:BJM/CECB,Wheelbase:4325 mm	Propshaft	PS901368
	2006.04-2011.07	6MT	Rear	Van RWD BJM/CECB	Engine Code:BJM,Wheelbase:4325 mm	Propshaft	PS901368
	2006.04-2011.07	MT	Rear	Chassis Cabin RWD BJM/CECB	Not for Engine Code:CECB,Wheelbase:3665 mm,For PR code:K4A/0R0	Propshaft	PS901362
	2006.04-2011.07	MT	Rear	Van RWD BJM/CECB	Engine Code:BJM,Wheelbase:3665 mm,For PR code:0R0/K4A	Propshaft	PS901362
	2006.04-2011.07		Centre	Chassis Cabin RWD BJM/CECB	Installation size:197mm	Center Bearing Support	538627
	2006.04-2011.07		Centre	Van RWD BJM/CECB	Installation size:197mm	Center Bearing Support	538627
	2006.04-2011.07		Centre	Chassis Cabin RWD BJM/CECB	Installation size:194mm	Center Bearing Support	538635
	2006.04-2011.07		Centre	Van RWD BJM/CECB	Installation size:194mm	Center Bearing Support	538635
	2006.04-2011.07		Centre	Chassis Cabin RWD BJM/CECB	with gasket	Center Bearing Support Kit	538680S
	2006.04-2011.07		Centre	Van RWD BJM/CECB	with gasket	Center Bearing Support Kit	538680S
	2006.04-2011.07		Centre	Chassis Cabin RWD BJM/CECB	without gasket	Center Bearing Support Kit	538693S
	2006.04-2011.07		Centre	Van RWD BJM/CECB	without gasket	Center Bearing Support Kit	538693S
Crafter 50							
2.0 (80 kw)	2011.05-2016.12	6MT	Rear	Chassis Cabin RWD CKTB	Wheelbase:4325 mm	Propshaft	PS901368
	2011.05-2016.12	6MT	Rear	Van RWD CKTB	For Model code:Crafter 50,Wheelbase:4325 mm	Propshaft	PS901368
	2011.05-2016.12	6MT	Rear	Van RWD CKTB	for PR number:0R0,1SB,1SD,0WC,1UV,Wheelbase: 3665 mm	Propshaft	PS901684
	2011.05-2016.12		Centre	Chassis Cabin RWD CKTB	Installation size:197mm	Center Bearing Support	538627
	2011.05-2016.12		Centre	Van RWD CKTB	Installation size:197mm	Center Bearing Support	538627
	2011.05-2016.12		Centre	Chassis Cabin RWD CKTB	Installation size:194mm	Center Bearing Support	538635
	2011.05-2016.12		Centre	Van RWD CKTB	Installation size:194mm	Center Bearing Support	538635
	2011.05-2016.12		Centre	Chassis Cabin RWD CKTB	with gasket	Center Bearing Support Kit	538680S
	2011.05-2016.12		Centre	Van RWD CKTB	with gasket	Center Bearing Support Kit	538680S
	2011.05-2016.12		Centre	Chassis Cabin RWD CKTB	without gasket	Center Bearing Support Kit	538693S
	2011.05-2016.12		Centre	Van RWD CKTB	without gasket	Center Bearing Support Kit	538693S

	YEAR	TRANSM.	FITTING POSITION	BODY STYLE & DRIVE TYPE & ENGINE	REMARKS	PRODUCT	GSP Ref.
VW **Crafter 50**							
2.0 (84 kw)	2013.11-2016.12	6MT	Rear	Van RWD CSLB	Wheelbase:4325 mm	Propshaft	PS901368
	2013.11-2016.12	6MT	Rear	Chassis Cabin RWD CSLB	Wheelbase:4325 mm	Propshaft	PS901368
	2013.11-2016.12	6MT	Rear	Van RWD CSLB	for PR number:0R0,Wheelbase: 3665 mm	Propshaft	PS901684
	2013.11-2016.12	6MT	Rear	Chassis Cabin RWD CSLB	for PR number:0R0,Wheelbase: 3665 mm	Propshaft	PS901684
	2013.11-2016.12		Centre	Van RWD CSLB	Installation size:197mm	Center Bearing Support	538627
	2013.11-2016.12		Centre	Chassis Cabin RWD CSLB	Installation size:197mm	Center Bearing Support	538627
	2013.11-2016.12		Centre	Van RWD CSLB	Installation size:194mm	Center Bearing Support	538635
	2013.11-2016.12		Centre	Chassis Cabin RWD CSLB	Installation size:194mm	Center Bearing Support	538635
	2013.11-2016.12		Centre	Van RWD CSLB		Center Bearing Support Kit	538693S
	2013.11-2016.12		Centre	Chassis Cabin RWD CSLB		Center Bearing Support Kit	538693S
2.0 (100 kw)	2011.05-2016.12	6MT	Rear	Van RWD CKTC	For Model code:Crafter 50,Wheelbase:4325 mm	Propshaft	PS901368
	2011.05-2016.12	6MT	Rear	Chassis Cabin RWD CKTC	Wheelbase:4325 mm	Propshaft	PS901368
	2011.05-2016.12	6MT	Rear	Van RWD CKTC	For Model code:Crafter 50,for PR number:0R0,Wheelbase: 3665 mm	Propshaft	PS901684
	2011.05-2016.12	6MT	Rear	Chassis Cabin RWD CKTC	for PR number:0R0,1SB,1SD,0WC,1UV,Wheelbase: 3665 mm	Propshaft	PS901684
	2011.05-2016.12	AT	Rear	Van RWD CKTC		Propshaft	PS900631
	2011.05-2016.12	AT	Rear	Chassis Cabin RWD CKTC		Propshaft	PS900631
	2011.05-2016.12		Centre	Van RWD CKTC	Installation size:197mm	Center Bearing Support	538627
	2011.05-2016.12		Centre	Chassis Cabin RWD CKTC	Installation size:197mm	Center Bearing Support	538627
	2011.05-2016.12		Centre	Van RWD CKTC	Installation size:194mm	Center Bearing Support	538635
	2011.05-2016.12		Centre	Chassis Cabin RWD CKTC	Installation size:194mm	Center Bearing Support	538635
	2011.05-2016.12		Centre	Van RWD CKTC	with gasket	Center Bearing Support Kit	538680S
	2011.05-2016.12		Centre	Chassis Cabin RWD CKTC	with gasket	Center Bearing Support Kit	538680S
	2011.05-2016.12		Centre	Van RWD CKTC	without gasket	Center Bearing Support Kit	538693S
	2011.05-2016.12		Centre	Chassis Cabin RWD CKTC	without gasket	Center Bearing Support Kit	538693S
2.0 (105 kw)	2011.10-2016.12	6MT	Rear	Chassis Cabin RWD CKUC	Wheelbase:4325 mm	Propshaft	PS901368
	2011.10-2016.12	6MT	Rear	Van RWD CKUC	Wheelbase:4325 mm	Propshaft	PS901368
	2011.10-2016.12	6MT	Rear	Chassis Cabin RWD CKUC	for PR number:0R0,Wheelbase: 3665 mm	Propshaft	PS901684
	2011.10-2016.12	6MT	Rear	Van RWD CKUC	For Model code:Crafter 50,for PR code:0R0,Wheelbase:3665 mm	Propshaft	PS901684
	2011.10-2016.12		Centre	Chassis Cabin RWD CKUC	Installation size:197mm	Center Bearing Support	538627
	2011.10-2016.12		Centre	Van RWD CKUC	Installation size:197mm	Center Bearing Support	538627
	2011.10-2016.12		Centre	Chassis Cabin RWD CKUC	Installation size:194mm	Center Bearing Support	538635
	2011.10-2016.12		Centre	Van RWD CKUC	Installation size:194mm	Center Bearing Support	538635
	2011.10-2016.12		Centre	Chassis Cabin RWD CKUC	with gasket	Center Bearing Support Kit	538680S
	2011.10-2016.12		Centre	Van RWD CKUC	with gasket	Center Bearing Support Kit	538680S
	2011.10-2016.12		Centre	Chassis Cabin RWD CKUC	without gasket	Center Bearing Support Kit	538693S
	2011.10-2016.12		Centre	Van RWD CKUC	without gasket	Center Bearing Support Kit	538693S
	2011.10-2016.12		Front	Chassis Cabin RWD CKUC		Flexible Coupling	538515
	2011.10-2016.12		Front	Van RWD CKUC		Flexible Coupling	538515
2.0 (120 kw)	2011.07-2016.12	6MT	Rear	Chassis Cabin RWD CKUB/CSNA	Date to:2011.06 for Engine Code:CKUB,Wheelbase:1665 mm,For PR code:0R0;Date from:2012.02-Wheelbase:1665 mm,For PR code:0R0;Date to:2011.06	Propshaft	PS901363
	2011.07-2016.12	6MT	Rear	Van RWD CKUB/CSNA	Date to:2011.06 For Model code: Crafter 50,Engine Code:CKUB,Wheelbase:3665 mm,For PR code:0R0	Propshaft	PS901363
	2011.07-2016.12	6MT	Rear	Chassis Cabin RWD CKUB/CSNA	Wheelbase:4325 mm	Propshaft	PS901368
	2011.07-2016.12	6MT	Rear	Van RWD CKUB/CSNA	Engine Code:CKUB/CSNA,Wheelbase:4325 mm	Propshaft	PS901368
	2011.07-2016.12		Centre	Chassis Cabin RWD CKUB/CSNA	Installation size:197mm	Center Bearing Support	538627
	2011.07-2016.12		Centre	Van RWD CKUB/CSNA	Installation size:197mm	Center Bearing Support	538627
	2011.07-2016.12		Centre	Chassis Cabin RWD CKUB/CSNA	Installation size:194mm	Center Bearing Support	538635
	2011.07-2016.12		Centre	Van RWD CKUB/CSNA	Installation size:194mm	Center Bearing Support	538635
	2011.07-2016.12		Centre	Chassis Cabin RWD CKUB/CSNA	with gasket	Center Bearing Support Kit	538680S
	2011.07-2016.12		Centre	Van RWD CKUB/CSNA	with gasket	Center Bearing Support Kit	538680S
	2011.07-2016.12		Centre	Chassis Cabin RWD CKUB/CSNA	without gasket	Center Bearing Support Kit	538693S
	2011.07-2016.12		Centre	Van RWD CKUB/CSNA	without gasket	Center Bearing Support Kit	538693S
	2011.07-2016.12		Front	Chassis Cabin RWD CKUB/CSNA		Flexible Coupling	538515
	2011.07-2016.12		Front	Van RWD CKUB/CSNA		Flexible Coupling	538515
2.5 (80 kw)	2006.04-2013.05	6MT	Front	Chassis Cabin RWD BJK/CEBB	Not For Engine Code:BJK,Wheelbase:4325mm,For PR code:G0U/0R0	Propshaft	PS900365
	2006.04-2013.05	6MT	Front	Van RWD BJK/CEBB	For Engine Code:CEBB,Wheelbase:4325mm,For PR code:G0U/0R0	Propshaft	PS900365
	2006.04-2013.05	6MT	Rear	Chassis Cabin RWD BJK/CEBB	----------	Propshaft	PS900550
	2006.04-2013.05	6MT	Rear	Van RWD BJK/CEBB	----------	Propshaft	PS900550
	2006.04-2013.05	6MT	Rear	Chassis Cabin RWD BJK/CEBB	For Model code:Crafter 50,Engine Code:BJK/CEBB,Wheelbase:4325 mm	Propshaft	PS901368
	2006.04-2013.05	6MT	Rear	Van RWD BJK/CEBB	For Model code:Crafter 50,heelbase:4325 mm	Propshaft	PS901368
	2006.04-2013.05	6MT	Rear	Chassis Cabin RWD BJK/CEBB	----------	Propshaft	PS901828
	2006.04-2013.05	6MT	Rear	Van RWD BJK/CEBB	----------	Propshaft	PS901828
	2006.04-2013.05		Centre	Chassis Cabin RWD BJK/CEBB	Installation size:197mm	Center Bearing Support	538627
	2006.04-2013.05		Centre	Van RWD BJK/CEBB	Installation size:197mm	Center Bearing Support	538627
	2006.04-2013.05		Centre	Chassis Cabin RWD BJK/CEBB	Installation size:194mm	Center Bearing Support	538635
	2006.04-2013.05		Centre	Van RWD BJK/CEBB	Installation size:194mm	Center Bearing Support	538635

	YEAR	TRANSM.	FITTING POSITION	BODY STYLE & DRIVE TYPE & ENGINE	REMARKS	PRODUCT	GSP Ref.
VW							
Crafter 50							
2.5 (80 kw)	2006.04-2013.05		Centre	Chassis Cabin RWD BJK/CEBB	with gasket	Center Bearing Support Kit	538680S
	2006.04-2013.05		Centre	Van RWD BJK/CEBB	with gasket	Center Bearing Support Kit	538680S
	2006.04-2013.05		Centre	Chassis Cabin RWD BJK/CEBB	without gasket	Center Bearing Support Kit	538693S
	2006.04-2013.05		Centre	Van RWD BJK/CEBB	without gasket	Center Bearing Support Kit	538693S
2.5 (100 kw)	2006.04-2013.05	6MT	Front	Chassis Cabin RWD BJL/CECA	For Engine Code:CECA,Wheelbase:4325mm,For PR code:G0U/0R0	Propshaft	PS900365
	2006.04-2013.05	6MT	Front	Van RWD BJL/CECA	For Engine Code:CECA,Wheelbase:4325mm,For PR code:G0U/0R0	Propshaft	PS900365
	2006.04-2013.05	6MT	Rear	Chassis Cabin RWD BJL/CECA	----------	Propshaft	PS900550
	2006.04-2013.05	6MT	Rear	Van RWD BJL/CECA	----------	Propshaft	PS900550
	2006.04-2013.05	6MT	Rear	Chassis Cabin RWD BJL/CECA	For Model code:Crafter 50,Engine Code:CECA,Wheelbase:4325 mm	Propshaft	PS901368
	2006.04-2013.05	6MT	Rear	Van RWD BJL/CECA	For Model code:Crafter 50,Wheelbase:4325 mm	Propshaft	PS901368
	2006.04-2013.05		Centre	Chassis Cabin RWD BJL/CECA	Installation size:197mm	Center Bearing Support	538627
	2006.04-2013.05		Centre	Van RWD BJL/CECA	Installation size:197mm	Center Bearing Support	538627
	2006.04-2013.05		Centre	Chassis Cabin RWD BJL/CECA	Installation size:194mm	Center Bearing Support	538635
	2006.04-2013.05		Centre	Van RWD BJL/CECA	Installation size:194mm	Center Bearing Support	538635
	2006.04-2013.05		Centre	Chassis Cabin RWD BJL/CECA	with gasket	Center Bearing Support Kit	538680S
	2006.04-2013.05		Centre	Van RWD BJL/CECA	with gasket	Center Bearing Support Kit	538680S
	2006.04-2013.05		Centre	Chassis Cabin RWD BJL/CECA	without gasket	Center Bearing Support Kit	538693S
	2006.04-2013.05		Centre	Van RWD BJL/CECA	without gasket	Center Bearing Support Kit	538693S
2.5 (120 kw)	2006.04-2011.07	6MT	Front	Chassis Cabin RWD BJM/CECB	Not For Engine Code:BJM,Wheelbase:4325mm,For PR code:G0U/0R0	Propshaft	PS900365
	2006.04-2011.07	6MT	Front	Van RWD BJM/CECB	For Engine Code:CECB,Wheelbase:4325mm,For PR code:G0U/0R0	Propshaft	PS900365
	2006.04-2011.07	MT	Front	Chassis Cabin RWD BJM/CECB	Not for Engine Code:CECB,Wheelbase:4325 mm,For PR code:0R0	Propshaft	PS901674
	2006.04-2011.07	MT	Front	Van RWD BJM/CECB	Engine Code:BJM,Wheelbase:4325 mm,For PR code:0R0	Propshaft	PS901674
	2006.04-2011.07	6MT	Rear	Chassis Cabin RWD BJM/CECB	Not for Engine Code:BJM/CECB,Wheelbase:4325 mm	Propshaft	PS901368
	2006.04-2011.07	6MT	Rear	Van RWD BJM/CECB	Engine Code:BJM,Wheelbase:4325 mm	Propshaft	PS901368
	2006.04-2011.07	MT	Rear	Chassis Cabin RWD BJM/CECB	Code:CECB,Engine code:CECA,wheel base:4665 mm,7 to 7R,max:4500kw,1mm:4665-4665kgm,code:0R0,Kamaz:4665 mm,7 to 7R,max:4x4:0R0	Propshaft	PS900550
	2006.04-2011.07	MT	Rear	Van RWD BJM/CECB	Not for Code:CECB,Engine code:CECA,wheel base:4665 mm,7 to 7R,max:4500kw,1mm:4665-4665kgm,code:0R0,Kamaz:4665 mm,7 to 7R,max:4x4:0R0	Propshaft	PS900550
	2006.04-2011.07	MT	Rear	Van RWD BJM/CECB	For Engine Code:CECB,wheel base:4325mm	Propshaft	PS900558
	2006.04-2011.07	MT	Rear	Chassis Cabin RWD BJM/CECB	Not for Engine Code:CECB,Wheelbase:3665 mm,For PR code:K4A/0R0	Propshaft	PS901362
	2006.04-2011.07	MT	Rear	Van RWD BJM/CECB	Engine Code:BJM,Wheelbase:3665 mm,For PR code:0R0,K4A	Propshaft	PS901362
	2006.04-2011.07		Centre	Chassis Cabin RWD BJM/CECB	Installation size:197mm	Center Bearing Support	538627
	2006.04-2011.07		Centre	Van RWD BJM/CECB	Installation size:197mm	Center Bearing Support	538627
	2006.04-2011.07		Centre	Chassis Cabin RWD BJM/CECB	Installation size:194mm	Center Bearing Support	538635
	2006.04-2011.07		Centre	Van RWD BJM/CECB	Installation size:194mm	Center Bearing Support	538635
	2006.04-2011.07		Centre	Chassis Cabin RWD BJM/CECB	with gasket	Center Bearing Support Kit	538680S
	2006.04-2011.07		Centre	Van RWD BJM/CECB	with gasket	Center Bearing Support Kit	538680S
	2006.04-2011.07		Centre	Chassis Cabin RWD BJM/CECB	without gasket	Center Bearing Support Kit	538693S
	2006.04-2011.07		Centre	Van RWD BJM/CECB	without gasket	Center Bearing Support Kit	538693S
Golf							
1.6 (77 kw)	2012.11-2017.03		Front	Hatchback 4WD CLHA		Flexible Coupling	537626
	2012.11-2017.03		Rear	Hatchback 4WD CLHA		Flexible Coupling	533882
	2012.11-2017.03		Front	Hatchback 4WD CLHA		Flexible Coupling Kit	537626S
	2012.11-2017.03		Rear	Hatchback 4WD CLHA		Flexible Coupling Kit	533882S
1.6 (81 kw)	2013.01-2017.03		Front	Hatchback 4WD CRKB		Flexible Coupling	537626
	2013.01-2017.03		Rear	Hatchback 4WD CRKB		Flexible Coupling	533882
	2013.01-2017.03		Front	Hatchback 4WD CRKB		Flexible Coupling Kit	537626S
	2013.01-2017.03		Rear	Hatchback 4WD CRKB		Flexible Coupling Kit	533882S
1.8 (92 kw)	1998.05-2000.10		Front	Hatchback 4WD AGN	6MT	Flexible Coupling	537626
	1998.05-2000.10		Front	Hatchback 4WD AGN	5MT	Flexible Coupling	538507
	1998.05-2000.10		Rear	Hatchback 4WD AGN		Flexible Coupling	538518
	1998.05-2000.10		Front	Hatchback 4WD AGN	6MT	Flexible Coupling Kit	537626S
	1998.05-2000.10		Front	Hatchback 4WD AGN	5MT	Flexible Coupling Kit	538508S
1.8 (125 kw)	2017.07-		Front	Estate 4WD CXBA/CXBB		Flexible Coupling	537626
	2017.07-		Rear	Estate 4WD CXBA/CXBB		Flexible Coupling	533882
	2017.07-		Front	Estate 4WD CXBA/CXBB		Flexible Coupling Kit	537626S
	2017.07-		Rear	Estate 4WD CXBA/CXBB		Flexible Coupling Kit	533882S
1.9 (66 kw)	1998.07-2002.04		Front	Hatchback 4WD AGR	6AT,6MT	Flexible Coupling	537626
	1998.07-2002.04		Front	Hatchback 4WD AGR	5MT	Flexible Coupling	538507
	1998.07-2002.04		Rear	Hatchback 4WD AGR		Flexible Coupling	538518
	1998.07-2002.04		Front	Hatchback 4WD AGR	6MT	Flexible Coupling Kit	537626S
	1998.07-2002.04		Front	Hatchback 4WD AGR	5MT	Flexible Coupling Kit	538508S
1.9 (74 kw)	2000.02-2005.06		Front	Hatchback 4WD ATD	6AT,6MT	Flexible Coupling	537626
	2000.02-2005.06		Front	Hatchback 4WD ATD	5MT	Flexible Coupling	538507
	2000.02-2005.06		Rear	Hatchback 4WD ATD		Flexible Coupling	538518
	2000.02-2005.06		Front	Hatchback 4WD ATD	6MT	Flexible Coupling Kit	537626S

	YEAR	TRANSM.	FITTING POSITION	BODY STYLE & DRIVE TYPE & ENGINE	REMARKS	PRODUCT	GSP Ref.
VW **Golf**							
1.9 (74 kw)	2000.02-2005.06		Front	Hatchback 4WD ATD	5MT	Flexible Coupling Kit	538508S
1.9 (77 kw)	2003.10-2007.07		Centre	Hatchback 4WD BKC		Center Bearing Support Kit	539917S
	2003.10-2007.07		Front	Hatchback 4WD BKC		Flexible Coupling	537626
	2003.10-2007.07		Rear	Hatchback 4WD BKC		Flexible Coupling	533882
	2003.10-2007.07		Front	Hatchback 4WD BKC		Flexible Coupling Kit	537626S
	2003.10-2007.07		Rear	Hatchback 4WD BKC		Flexible Coupling Kit	533882S
1.9 (85 kw)	2000.01-2001.07		Front	Hatchback 4WD AJM/AUY	6MT	Flexible Coupling	537626
	2000.01-2001.07		Front	Hatchback 4WD AJM/AUY	5MT	Flexible Coupling	538507
	2000.01-2001.07		Rear	Hatchback 4WD AJM/AUY		Flexible Coupling	538518
	2000.01-2001.07		Front	Hatchback 4WD AJM/AUY	6MT	Flexible Coupling Kit	537626S
	2000.01-2001.07		Front	Hatchback 4WD AJM/AUY	5MT	Flexible Coupling Kit	538508S
1.9 (96 kw)	2001.04-2005.06		Front	Hatchback 4WD ASZ	6AT,6MT	Flexible Coupling	537626
	2001.04-2005.06		Front	Hatchback 4WD ASZ	5MT	Flexible Coupling	538507
	2001.04-2005.06		Rear	Hatchback 4WD ASZ		Flexible Coupling	538518
	2001.04-2005.06		Front	Hatchback 4WD ASZ	6MT	Flexible Coupling Kit	537626S
	2001.04-2005.06		Front	Hatchback 4WD ASZ	5MT	Flexible Coupling Kit	538508S
1.9 (110 kw)	2001.05-2005.06		Front	Hatchback 4WD ARL	6AT,6MT	Flexible Coupling	537626
	2001.05-2005.06		Front	Hatchback 4WD ARL	5MT	Flexible Coupling	538507
	2001.05-2005.06		Rear	Hatchback 4WD ARL		Flexible Coupling	538518
	2001.05-2005.06		Front	Hatchback 4WD ARL	6MT	Flexible Coupling Kit	537626S
	2001.05-2005.06		Front	Hatchback 4WD ARL	5MT	Flexible Coupling Kit	538508S
2.0 (85 kw)	2000.04-2005.06		Front	Hatchback 4WD AZH/AZJ	6MT	Flexible Coupling	537626
	2000.04-2005.06		Front	Hatchback 4WD AZH/AZJ	5MT	Flexible Coupling	538507
	2000.04-2005.06		Rear	Hatchback 4WD AZH/AZJ		Flexible Coupling	538518
	2000.04-2005.06		Front	Hatchback 4WD AZH/AZJ	6MT	Flexible Coupling Kit	537626S
	2000.04-2005.06		Front	Hatchback 4WD AZH/AZJ	5MT	Flexible Coupling Kit	538508S
2.0 (103 kw)	2004.08-2008.11		Centre	Hatchback 4WD BKD		Center Bearing Support Kit	539917S
	2004.08-2008.11		Front	Hatchback 4WD BKD		Flexible Coupling	537626
	2004.08-2008.11		Rear	Hatchback 4WD BKD		Flexible Coupling	533882
	2004.08-2008.11		Front	Hatchback 4WD BKD		Flexible Coupling Kit	537626S
	2004.08-2008.11		Rear	Hatchback 4WD BKD		Flexible Coupling Kit	533882S
	2007.01-2008.11		Centre	Hatchback 4WD BMM		Center Bearing Support Kit	539917S
	2007.01-2008.11		Front	Hatchback 4WD BMM		Flexible Coupling	537626
	2007.01-2008.11		Rear	Hatchback 4WD BMM		Flexible Coupling	533882
	2007.01-2008.11		Front	Hatchback 4WD BMM		Flexible Coupling Kit	537626S
	2007.01-2008.11		Rear	Hatchback 4WD BMM		Flexible Coupling Kit	533882S
	2008.10-2012.11		Centre	Hatchback 4WD CBAB/CFFB		Center Bearing Support Kit	539917S
	2008.10-2012.11		Front	Hatchback 4WD CBAB/CFFB		Flexible Coupling	537626
	2008.10-2012.11		Rear	Hatchback 4WD CBAB/CFFB		Flexible Coupling	533882
	2008.10-2012.11		Front	Hatchback 4WD CBAB/CFFB		Flexible Coupling Kit	537626S
	2008.10-2012.11		Rear	Hatchback 4WD CBAB/CFFB		Flexible Coupling Kit	533882S
2.0 (110 kw)	2005.05-2008.11		Centre	Hatchback 4WD BLX/BVX		Center Bearing Support Kit	539917S
	2005.05-2008.11		Front	Hatchback 4WD BLX/BVX		Flexible Coupling	537626
	2005.05-2008.11		Rear	Hatchback 4WD BLX/BVX		Flexible Coupling	533882
	2005.05-2008.11		Front	Hatchback 4WD BLX/BVX		Flexible Coupling Kit	537626S
	2005.05-2008.11		Rear	Hatchback 4WD BLX/BVX		Flexible Coupling Kit	533882S
	2012.11-2020.08		Front	Hatchback 4WD CKFC/CRBC/CRLB/CRMB/DCYA/DFGA		Flexible Coupling	537626
	2012.11-2020.08		Rear	Hatchback 4WD CKFC/CRBC/CRLB/CRMB/DCYA/DFGA		Flexible Coupling	533882
	2012.11-2020.08		Front	Hatchback 4WD CKFC/CRBC/CRLB/CRMB/DCYA/DFGA		Flexible Coupling Kit	537626S
	2012.11-2020.08		Rear	Hatchback 4WD CKFC/CRBC/CRLB/CRMB/DCYA/DFGA		Flexible Coupling Kit	533882S
2.0 (188 kw)	2009.11-2012.11		Centre	Hatchback 4WD CDLC		Center Bearing Support Kit	539917S
	2009.11-2012.11		Rear	Hatchback 4WD CDLC		Flexible Coupling	533882
	2009.11-2012.11		Front	Hatchback 4WD CDLC		Flexible Coupling Kit	537626S
	2009.11-2012.11		Rear	Hatchback 4WD CDLC		Flexible Coupling Kit	533882S
2.0 (191 kw)	2011.09-2013.11		Centre	Hatchback 4WD CRZA		Center Bearing Support Kit	539917S
2.0 (195 kw)	2009.11-2011.05		Centre	Hatchback 4WD CDLA		Center Bearing Support Kit	539917S
	2009.11-2011.05		Rear	Hatchback 4WD CDLA		Flexible Coupling	533882
	2009.11-2011.05		Front	Hatchback 4WD CDLA		Flexible Coupling Kit	537626S
	2009.11-2011.05		Rear	Hatchback 4WD CDLA		Flexible Coupling Kit	533882S
2.0 (199 kw)	2009.11-2012.11		Centre	Hatchback 4WD CDLF		Center Bearing Support Kit	539917S
	2009.11-2012.11		Front	Hatchback 4WD CDLF		Flexible Coupling	537626
	2009.11-2012.11		Rear	Hatchback 4WD CDLF		Flexible Coupling	533882
	2009.11-2012.11		Front	Hatchback 4WD CDLF		Flexible Coupling Kit	537626S
	2009.11-2012.11		Rear	Hatchback 4WD CDLF		Flexible Coupling Kit	533882S

	YEAR	TRANSM.	FITTING POSITION	BODY STYLE & DRIVE TYPE & ENGINE	REMARKS	PRODUCT	GSP Ref.
VW **Golf**							
2.0 (206 kw)	2013.11-2017.03		Front	Hatchback 4WD CJXB		Flexible Coupling	537626
	2013.11-2017.03		Rear	Hatchback 4WD CJXB		Flexible Coupling	533882
	2013.11-2017.03		Front	Hatchback 4WD CJXB		Flexible Coupling Kit	537626S
	2013.11-2017.03		Rear	Hatchback 4WD CJXB		Flexible Coupling Kit	533882S
2.0 (213 kw)	2013.11-2020.08		Front	Hatchback 4WD CJXD/DJHB/DNUC		Flexible Coupling	537626
	2013.11-2020.08		Rear	Hatchback 4WD CJXD/DJHB/DNUC		Flexible Coupling	533882
	2013.11-2020.08		Front	Hatchback 4WD CJXD/DJHB/DNUC		Flexible Coupling Kit	537626S
	2013.11-2020.08		Rear	Hatchback 4WD CJXD/DJHB/DNUC		Flexible Coupling Kit	533882S
2.0 (215 kw)	2014.11-2019.07		Front	Hatchback 4WD CYFB, DJJA, DLRA		Flexible Coupling	537626
	2014.11-2019.07		Rear	Hatchback 4WD CYFB, DJJA, DLRA		Flexible Coupling	533882
	2014.11-2019.07		Front	Hatchback 4WD CYFB, DJJA, DLRA		Flexible Coupling Kit	537626S
	2014.11-2019.07		Rear	Hatchback 4WD CYFB, DJJA, DLRA		Flexible Coupling Kit	533882S
2.0 (221 kw)	2013.11-2020.08		Front	Hatchback 4WD CJXC/DNUE		Flexible Coupling	537626
	2013.11-2020.08		Rear	Hatchback 4WD CJXC/DNUE		Flexible Coupling	533882
	2013.11-2020.08		Front	Hatchback 4WD CJXC/DNUE		Flexible Coupling Kit	537626S
	2013.11-2020.08		Rear	Hatchback 4WD CJXC/DNUE		Flexible Coupling Kit	533882S
2.0 (228 kw)	2016.12-2020.08		Front	Hatchback 4WD CJXG/DJHA		Flexible Coupling	537626
	2016.12-2020.08		Rear	Hatchback 4WD CJXG/DJHA		Flexible Coupling	533882
	2016.12-2020.08		Front	Hatchback 4WD CJXG/DJHA		Flexible Coupling Kit	537626S
	2016.12-2020.08		Rear	Hatchback 4WD CJXG/DJHA		Flexible Coupling Kit	533882S
2.0 (265 kw)	2016.09-		Front	Hatchback 4WD CJXC		Flexible Coupling	537626
	2016.09-		Rear	Hatchback 4WD CJXC		Flexible Coupling	533882
	2016.09-		Front	Hatchback 4WD CJXC		Flexible Coupling Kit	537626S
	2016.09-		Rear	Hatchback 4WD CJXC		Flexible Coupling Kit	533882S
2.3 (110 kw)	1998.11-2000.05		Front	Hatchback 4WD AGZ	6MT	Flexible Coupling	537626
	1998.11-2000.05		Front	Hatchback 4WD AGZ	5MT	Flexible Coupling	538507
	1998.11-2000.05		Rear	Hatchback 4WD AGZ		Flexible Coupling	538518
	1998.11-2000.05		Front	Hatchback 4WD AGZ	6MT	Flexible Coupling Kit	537626S
	1998.11-2000.05		Front	Hatchback 4WD AGZ	5MT	Flexible Coupling Kit	538508S
2.3 (125 kw)	2000.09-2005.06		Front	Hatchback 4WD AQN	6AT,6MT	Flexible Coupling	537626
	2000.09-2005.06		Front	Hatchback 4WD AQN	5MT	Flexible Coupling	538507
	2000.09-2005.06		Rear	Hatchback 4WD AQN		Flexible Coupling	538518
	2000.09-2005.06		Front	Hatchback 4WD AQN	6MT	Flexible Coupling Kit	537626S
	2000.09-2005.06		Front	Hatchback 4WD AQN	5MT	Flexible Coupling Kit	538508S
2.8 (150 kw)	1999.05-2005.06		Front	Hatchback 4WD AQP/AUE/BDE	6MT	Flexible Coupling	537626
	1999.05-2005.06		Front	Hatchback 4WD AQP/AUE/BDE	5MT	Flexible Coupling	538507
	1999.05-2005.06		Rear	Hatchback 4WD AQP/AUE/BDE		Flexible Coupling	538518
	1999.05-2005.06		Front	Hatchback 4WD AQP/AUE/BDE	6MT	Flexible Coupling Kit	537626S
	1999.05-2005.06		Front	Hatchback 4WD AQP/AUE/BDE	5MT	Flexible Coupling Kit	538508S
3.2 (177 kw)	2002.06-2005.06		Front	Hatchback 4WD BFH/BML	6AT,6MT	Flexible Coupling	537626
	2002.06-2005.06		Front	Hatchback 4WD BFH/BML	5MT	Flexible Coupling	538507
	2002.06-2005.06		Rear	Hatchback 4WD BFH/BML		Flexible Coupling	538518
	2002.06-2005.06		Front	Hatchback 4WD BFH/BML	6MT	Flexible Coupling Kit	537626S
	2002.06-2005.06		Front	Hatchback 4WD BFH/BML	5MT	Flexible Coupling Kit	538508S
3.2 (184 kw)	2005.05-2008.11	AT/MT	Rear	Hatchback 4WD BUB/CBRA		Propshaft	PS900102
	2005.05-2008.11		Centre	Hatchback 4WD BUB/CBRA		Center Bearing Support Kit	539917S
	2005.05-2008.11		Front	Hatchback 4WD BUB/CBRA		Flexible Coupling	537626
	2005.05-2008.11		Front	Hatchback 4WD BUB/CBRA		Flexible Coupling Kit	537626S
Golf Alltrack							
1.6 (81 kw)	2014.12-2017.03		Front	Estate 4WD CRKB/CXXB		Flexible Coupling	537626
	2014.12-2017.03		Rear	Estate 4WD CRKB/CXXB		Flexible Coupling	533882
	2014.12-2017.03		Front	Estate 4WD CRKB/CXXB		Flexible Coupling Kit	537626S
	2014.12-2017.03		Rear	Estate 4WD CRKB/CXXB		Flexible Coupling Kit	533882S
1.8 (132 kw)	2014.12-2020.08	AT	Rear	Estate 4WD CJSB		Propshaft	PS900585
	2014.12-2020.08		Centre	Estate 4WD CJSB		Center Bearing Support	539930
	2014.12-2020.08		Front	Estate 4WD CJSB		Flexible Coupling	537626
	2014.12-2020.08		Rear	Estate 4WD CJSB		Flexible Coupling	533882
	2014.12-2020.08		Front	Estate 4WD CJSB		Flexible Coupling Kit	537626S
	2014.12-2020.08		Rear	Estate 4WD CJSB		Flexible Coupling Kit	533882S
2.0 (110 kw)	2014.12-2020.08		Front	Estate 4WD CRBC/CRLB/DCYA/DFGA		Flexible Coupling	537626
	2014.12-2020.08		Rear	Estate 4WD CRBC/CRLB/DCYA/DFGA		Flexible Coupling	533882
	2014.12-2020.08		Front	Estate 4WD CRBC/CRLB/DCYA/DFGA		Flexible Coupling Kit	537626S
	2014.12-2020.08		Rear	Estate 4WD CRBC/CRLB/DCYA/DFGA		Flexible Coupling Kit	533882S

	YEAR	TRANSM.	FITTING POSITION	BODY STYLE & DRIVE TYPE & ENGINE	REMARKS	PRODUCT	GSP Ref.
VW							
Golf Alltrack							
2.0 (135 kw)	2014.12-2020.08		Front	Estate 4WD CUNA/DGCA/DJGA		Flexible Coupling	537626
	2014.12-2020.08		Rear	Estate 4WD CUNA/DGCA/DJGA		Flexible Coupling	533882
	2014.12-2020.08		Front	Estate 4WD CUNA/DGCA/DJGA		Flexible Coupling Kit	537626S
	2014.12-2020.08		Rear	Estate 4WD CUNA/DGCA/DJGA		Flexible Coupling Kit	533882S
Golf Estate/Variant							
1.6 (77 kw)	2009.07-2013.07		Centre	Estate 4WD CAYC		Center Bearing Support Kit	539917S
	2009.07-2013.07		Front	Estate 4WD CAYC		Flexible Coupling	537626
	2009.07-2013.07		Rear	Estate 4WD CAYC		Flexible Coupling	533882
	2009.07-2013.07		Front	Estate 4WD CAYC		Flexible Coupling Kit	537626S
	2009.07-2013.07		Rear	Estate 4WD CAYC		Flexible Coupling Kit	533882S
	2013.05-2017.03		Front	Estate 4WD CLHA		Flexible Coupling	537626
	2013.05-2017.03		Rear	Estate 4WD CLHA		Flexible Coupling	533882
	2013.05-2017.03		Front	Estate 4WD CLHA		Flexible Coupling Kit	537626S
	2013.05-2017.03		Rear	Estate 4WD CLHA		Flexible Coupling Kit	533882S
1.6 (81 kw)	2013.05-2017.03		Front	Estate 4WD CRKB		Flexible Coupling	537626
	2013.05-2017.03		Rear	Estate 4WD CRKB		Flexible Coupling	533882
	2013.05-2017.03		Front	Estate 4WD CRKB		Flexible Coupling Kit	537626S
	2013.05-2017.03		Rear	Estate 4WD CRKB		Flexible Coupling Kit	533882S
1.8 (92 kw)	1999.05-2000.10		Front	Estate 4WD AGN	6MT	Flexible Coupling	537626
	1999.05-2000.10		Front	Estate 4WD AGN	5MT	Flexible Coupling	538507
	1999.05-2000.10		Rear	Estate 4WD AGN		Flexible Coupling	538518
	1999.05-2000.10		Front	Estate 4WD AGN	6MT	Flexible Coupling Kit	537626S
	1999.05-2000.10		Front	Estate 4WD AGN	5MT	Flexible Coupling Kit	538508S
1.8 (132 kw)	2016.11-	AT	Rear	Estate 4WD CJSB		Propshaft	PS900585
	2016.11-		Centre	Estate 4WD CJSB		Center Bearing Support	539930
1.9 (66 kw)	1999.05-2002.04		Front	Estate 4WD AGR	6AT,6MT	Flexible Coupling	537626
	1999.05-2002.04		Front	Estate 4WD AGR	5MT	Flexible Coupling	538507
	1999.05-2002.04		Rear	Estate 4WD AGR		Flexible Coupling	538518
	1999.05-2002.04		Front	Estate 4WD AGR	6MT	Flexible Coupling Kit	537626S
	1999.05-2002.04		Front	Estate 4WD AGR	5MT	Flexible Coupling Kit	538508S
1.9 (74 kw)	2000.02-2005.06		Front	Estate 4WD ATD	6AT,6MT	Flexible Coupling	537626
	2000.02-2005.06		Front	Estate 4WD ATD	5MT	Flexible Coupling	538507
	2000.02-2005.06		Rear	Estate 4WD ATD		Flexible Coupling	538518
	2000.02-2005.06		Front	Estate 4WD ATD	6MT	Flexible Coupling Kit	537626S
	2000.02-2005.06		Front	Estate 4WD ATD	5MT	Flexible Coupling Kit	538508S
1.9 (77 kw)	2007.12-2009.07		Centre	Estate 4WD BLS		Center Bearing Support Kit	539917S
	2007.12-2009.07		Front	Estate 4WD BLS		Flexible Coupling	537626
	2007.12-2009.07		Front	Estate 4WD BLS		Flexible Coupling Kit	537626S
	2007.12-2009.07		Rear	Estate 4WD BLS		Flexible Coupling Kit	533882S
1.9 (85 kw)	1999.12-2001.07		Front	Estate 4WD AJM/AUY	6MT	Flexible Coupling	537626
	1999.12-2001.07		Front	Estate 4WD AJM/AUY	5MT	Flexible Coupling	538507
	1999.12-2001.07		Rear	Estate 4WD AJM/AUY		Flexible Coupling	538518
	1999.12-2001.07		Front	Estate 4WD AJM/AUY	6MT	Flexible Coupling Kit	537626S
	1999.12-2001.07		Front	Estate 4WD AJM/AUY	5MT	Flexible Coupling Kit	538508S
1.9 (96 kw)	2001.04-2005.06		Front	Estate 4WD ASZ	6AT,6MT	Flexible Coupling	537626
	2001.04-2005.06		Front	Estate 4WD ASZ	5MT	Flexible Coupling	538507
	2001.04-2005.06		Rear	Estate 4WD ASZ		Flexible Coupling	538518
	2001.04-2005.06		Front	Estate 4WD ASZ	6MT	Flexible Coupling Kit	537626S
	2001.04-2005.06		Front	Estate 4WD ASZ	5MT	Flexible Coupling Kit	538508S
1.9 (110 kw)	2002.05-2005.06		Front	Estate 4WD ARL	6MT	Flexible Coupling Kit	537626S
2.0 (85 kw)	2000.04-2005.06		Front	Estate 4WD AZH/AZJ	6MT	Flexible Coupling	537626
	2000.04-2005.06		Front	Estate 4WD AZH/AZJ	5MT	Flexible Coupling	538507
	2000.04-2005.06		Rear	Estate 4WD AZH/AZJ		Flexible Coupling	538518
	2000.04-2005.06		Front	Estate 4WD AZH/AZJ	6MT	Flexible Coupling Kit	537626S
	2000.04-2005.06		Front	Estate 4WD AZH/AZJ	5MT	Flexible Coupling Kit	538508S
2.0 (110 kw)	2013.04-2020.08		Front	Estate 4WD CRBC/CRLB/DCYA/DFGA		Flexible Coupling	537626
	2013.04-2020.08		Rear	Estate 4WD CRBC/CRLB/DCYA/DFGA		Flexible Coupling	533882
	2013.04-2020.08		Front	Estate 4WD CRBC/CRLB/DCYA/DFGA		Flexible Coupling Kit	537626S
	2013.04-2020.08		Rear	Estate 4WD CRBC/CRLB/DCYA/DFGA		Flexible Coupling Kit	533882S
2.0 (206 kw)	2015.03-2017.03		Front	Estate 4WD CJXB		Flexible Coupling	537626
	2015.03-2017.03		Rear	Estate 4WD CJXB		Flexible Coupling	533882
	2015.03-2017.03		Front	Estate 4WD CJXB		Flexible Coupling Kit	537626S
	2015.03-2017.03		Rear	Estate 4WD CJXB		Flexible Coupling Kit	533882S

	YEAR	TRANSM.	FITTING POSITION	BODY STYLE & DRIVE TYPE & ENGINE	REMARKS	PRODUCT	GSP Ref.
VW							
Golf Estate/Variant							
2.0 (213 kw)	2016.12-2020.08		Front	Estate 4WD CJXD/DJHB/DNUC		Flexible Coupling	537626
	2016.12-2020.08		Rear	Estate 4WD CJXD/DJHB/DNUC		Flexible Coupling	533882
	2016.12-2020.08		Front	Estate 4WD CJXD/DJHB/DNUC		Flexible Coupling Kit	537626S
	2016.12-2020.08		Rear	Estate 4WD CJXD/DJHB/DNUC		Flexible Coupling Kit	533882S
2.0 (221 kw)	2015.03-2020.08		Front	Estate 4WD CJXC/DNUE		Flexible Coupling	537626
	2015.03-2020.08		Rear	Estate 4WD CJXC/DNUE		Flexible Coupling	533882
	2015.03-2020.08		Front	Estate 4WD CJXC/DNUE		Flexible Coupling Kit	537626S
	2015.03-2020.08		Rear	Estate 4WD CJXC/DNUE		Flexible Coupling Kit	533882S
2.0 (228 kw)	2016.12-2020.08		Front	Estate 4WD CJXG/DJHA		Flexible Coupling	537626
	2016.12-2020.08		Rear	Estate 4WD CJXG/DJHA		Flexible Coupling	533882
	2016.12-2020.08		Front	Estate 4WD CJXG/DJHA		Flexible Coupling Kit	537626S
	2016.12-2020.08		Rear	Estate 4WD CJXG/DJHA		Flexible Coupling Kit	533882S
2.0 (265 kw)	2016.09-		Front	Estate 4WD CJXC		Flexible Coupling	537626
	2016.09-		Rear	Estate 4WD CJXC		Flexible Coupling	533882
	2016.09-		Front	Estate 4WD CJXC		Flexible Coupling Kit	537626S
	2016.09-		Rear	Estate 4WD CJXC		Flexible Coupling Kit	533882S
2.3 (110 kw)	1999.05-2001.02		Front	Estate 4WD AGZ	6MT	Flexible Coupling	537626
	1999.05-2001.02		Front	Estate 4WD AGZ	5MT	Flexible Coupling	538507
	1999.05-2001.02		Rear	Estate 4WD AGZ		Flexible Coupling	538518
	1999.05-2001.02		Front	Estate 4WD AGZ	6MT	Flexible Coupling Kit	537626S
	1999.05-2001.02		Front	Estate 4WD AGZ	5MT	Flexible Coupling Kit	538508S
2.3 (125 kw)	2000.09-2005.06		Front	Estate 4WD AQN	6AT,6MT	Flexible Coupling	537626
	2000.09-2005.06		Front	Estate 4WD AQN	5MT	Flexible Coupling	538507
	2000.09-2005.06		Rear	Estate 4WD AQN		Flexible Coupling	538518
	2000.09-2005.06		Front	Estate 4WD AQN	6MT	Flexible Coupling Kit	537626S
	2000.09-2005.06		Front	Estate 4WD AQN	5MT	Flexible Coupling Kit	538508S
2.8 (150 kw)	1999.05-2005.06		Front	Estate 4WD AQP/AUE/BDE	6MT	Flexible Coupling	537626
	1999.05-2005.06		Front	Estate 4WD AQP/AUE/BDE	5MT	Flexible Coupling	538507
	1999.05-2005.06		Rear	Estate 4WD AQP/AUE/BDE		Flexible Coupling	538518
	1999.05-2005.06		Front	Estate 4WD AQP/AUE/BDE	6MT	Flexible Coupling Kit	537626S
	1999.05-2005.06		Front	Estate 4WD AQP/AUE/BDE	5MT	Flexible Coupling Kit	538508S
Golf Van (Hatchback)							
1.9 (85 kw)	2000.01-2001.04		Front	Hatchback Van 4WD AUY	6MT	Flexible Coupling	537626
	2000.01-2001.04		Front	Hatchback Van 4WD AUY	5MT	Flexible Coupling	538507
	2000.01-2001.04		Front	Hatchback Van 4WD AUY	6MT	Flexible Coupling Kit	537626S
	2000.01-2001.04		Front	Hatchback Van 4WD AUY	5MT	Flexible Coupling Kit	538508S
Golf Van (Variant)							
1.6 (77 kw)	2013.05-2017.03		Front	Combi Van 4WD CLHA		Flexible Coupling	537626
	2013.05-2017.03		Rear	Combi Van 4WD CLHA		Flexible Coupling	533882
	2013.05-2017.03		Front	Combi Van 4WD CLHA		Flexible Coupling Kit	537626S
	2013.05-2017.03		Rear	Combi Van 4WD CLHA		Flexible Coupling Kit	533882S
2.0 (110 kw)	2013.04-2017.03		Front	Combi Van 4WD CRBC/CRLB/DCYA		Flexible Coupling	537626
	2013.04-2017.03		Rear	Combi Van 4WD CRBC/CRLB/DCYA		Flexible Coupling	533882
	2013.04-2017.03		Front	Combi Van 4WD CRBC/CRLB/DCYA		Flexible Coupling Kit	537626S
	2013.04-2017.03		Rear	Combi Van 4WD CRBC/CRLB/DCYA		Flexible Coupling Kit	533882S
LT 28							
2.3 (105 kw)	1996.05-2006.07		Centre	Bus RWD AGL (05.96-.)		Center Bearing Support	539009
	1996.05-2006.07		Centre	Van RWD AGL (05.96-.)		Center Bearing Support	539009
	1996.05-2006.07		Centre	Bus RWD AGL (05.96-.)		Center Bearing Support Kit	538995S
	1996.05-2006.07		Centre	Van RWD AGL (05.96-.)		Center Bearing Support Kit	538995S
	1996.06-2006.07		Centre	Platform/Chassis RWD AGL (06.96-.)		Center Bearing Support	539009
	1996.06-2006.07		Centre	Platform/Chassis RWD AGL (06.96-.)		Center Bearing Support Kit	538995S
2.5 (55 kw)	1996.07-2006.07	MT	Front	Bus RWD AGX (07.96-.)	Date to:2001.04,wheel base:4025 mm	Propshaft	PS900568
	1996.07-2006.07	MT	Rear	Bus RWD AGX (07.96-.)	Date to:2001.04,Wheelbase:3550 mm,for OE No.:2D0521101AM	Propshaft	PS900373
	1996.07-2006.07		Centre	Bus RWD AGX (07.96-.)		Center Bearing Support	539009
	1996.07-2006.07		Centre	Bus RWD AGX (07.96-.)		Center Bearing Support Kit	538995S
	1996.09-2006.07	MT	Front	Platform/Chassis RWD AGX (09.96-.)	Date to:2001.04,wheel base:4025 mm	Propshaft	PS900568
	1996.09-2006.07	MT	Front	Van RWD AGX (09.96-.)	Date to:2001.04,wheel base:4025 mm	Propshaft	PS900568
	1996.09-2006.07	MT	Rear	Platform/Chassis RWD AGX (09.96-.)	Date to:2001.04,Wheelbase:3550 mm,for OE No.:2D0521101AM	Propshaft	PS900373
	1996.09-2006.07	MT	Rear	Van RWD AGX (09.96-.)	Date to:2001.04,Wheelbase:3550 mm,for OE No.:2D0521101AM	Propshaft	PS900373
	1996.09-2006.07		Centre	Platform/Chassis RWD AGX (09.96-.)		Center Bearing Support	539009
	1996.09-2006.07		Centre	Van RWD AGX (09.96-.)		Center Bearing Support	539009
	1996.09-2006.07		Centre	Platform/Chassis RWD AGX (09.96-.)		Center Bearing Support Kit	538995S
	1996.09-2006.07		Centre	Van RWD AGX (09.96-.)		Center Bearing Support Kit	538995S

	YEAR	TRANSM.	FITTING POSITION	BODY STYLE & DRIVE TYPE & ENGINE	REMARKS	PRODUCT	GSP Ref.
VW **LT 28**							
2.5 (61 kw)	2001.05-2006.07	MT	Front	Bus RWD BBE	wheel base:4025 mm	Propshaft	PS900568
	2001.05-2006.07	MT	Front	Van RWD BBE	wheel base:4025 mm	Propshaft	PS900568
	2001.05-2006.07	MT	Front	Platform/Chassis RWD BBE	wheel base:4025 mm	Propshaft	PS900568
	2001.05-2006.07	MT	Rear	Bus RWD BBE	Wheelbase:3550 mm,for OE No.:2D0521101AM	Propshaft	PS900373
	2001.05-2006.07	MT	Rear	Van RWD BBE	Wheelbase:3550 mm,for OE No.:2D0521101AM	Propshaft	PS900373
	2001.05-2006.07	MT	Rear	Platform/Chassis RWD BBE	Wheelbase:3550 mm,for OE No.:2D0521101AM	Propshaft	PS900373
	2001.05-2006.07		Centre	Bus RWD BBE		Center Bearing Support	539009
	2001.05-2006.07		Centre	Van RWD BBE		Center Bearing Support	539009
	2001.05-2006.07		Centre	Platform/Chassis RWD BBE		Center Bearing Support	539009
	2001.05-2006.07		Centre	Bus RWD BBE		Center Bearing Support Kit	538995S
	2001.05-2006.07		Centre	Van RWD BBE		Center Bearing Support Kit	538995S
	2001.05-2006.07		Centre	Platform/Chassis RWD BBE		Center Bearing Support Kit	538995S
2.5 (66 kw)	1999.05-2006.07	MT	Front	Platform/Chassis RWD APA	Date to:2001.04,wheel base:4025 mm	Propshaft	PS900568
	1999.05-2006.07	MT	Rear	Platform/Chassis RWD APA	Date to:2001.04,Wheelbase:3550 mm,for OE No.:2D0521101AM	Propshaft	PS900373
	1999.05-2006.07	MT	Rear	Bus RWD APA	Date to:2003.05,Wheelbase:3550 mm,for OE No.:2D0521101AM	Propshaft	PS900373
	1999.05-2006.07	MT	Rear	Van RWD APA	Date to:2003.05,Wheelbase:3550 mm,for OE No.:2D0521101AM	Propshaft	PS900373
	1999.05-2006.07		Centre	Platform/Chassis RWD APA		Center Bearing Support	539009
	1999.05-2006.07		Centre	Bus RWD APA		Center Bearing Support	539009
	1999.05-2006.07		Centre	Van RWD APA		Center Bearing Support	539009
	1999.05-2006.07		Centre	Platform/Chassis RWD APA		Center Bearing Support Kit	538995S
	1999.05-2006.07		Centre	Bus RWD APA		Center Bearing Support Kit	538995S
	1999.05-2006.07		Centre	Van RWD APA		Center Bearing Support Kit	538995S
2.5 (70 kw)	2001.05-2006.07	MT	Front	Bus RWD BBF	wheel base:4025 mm	Propshaft	PS900568
	2001.05-2006.07	MT	Front	Van RWD BBF	wheel base:4025 mm	Propshaft	PS900568
	2001.05-2006.07	MT	Front	Platform/Chassis RWD BBF	wheel base:4025 mm	Propshaft	PS900568
	2001.05-2006.07	MT	Rear	Bus RWD BBF	Wheelbase:3550 mm,for OE No.:2D0521101AM	Propshaft	PS900373
	2001.05-2006.07	MT	Rear	Van RWD BBF	Wheelbase:3550 mm,for OE No.:2D0521101AM	Propshaft	PS900373
	2001.05-2006.07	MT	Rear	Platform/Chassis RWD BBF	Wheelbase:3550 mm,for OE No.:2D0521101AM	Propshaft	PS900373
	2001.05-2006.07		Centre	Bus RWD BBF		Center Bearing Support	539009
	2001.05-2006.07		Centre	Van RWD BBF		Center Bearing Support	539009
	2001.05-2006.07		Centre	Platform/Chassis RWD BBF		Center Bearing Support	539009
	2001.05-2006.07		Centre	Bus RWD BBF		Center Bearing Support Kit	538995S
	2001.05-2006.07		Centre	Van RWD BBF		Center Bearing Support Kit	538995S
	2001.05-2006.07		Centre	Platform/Chassis RWD BBF		Center Bearing Support Kit	538995S
2.5 (75 kw)	1996.05-1999.08	MT	Front	Bus RWD AHD (05.96-.)	Date to:1999.05,wheel base:4025 mm	Propshaft	PS900568
	1996.05-1999.08	MT	Front	Van RWD AHD (05.96-.)	Date to:1999.05,wheel base:4025 mm	Propshaft	PS900568
	1996.05-1999.08	MT	Rear	Bus RWD AHD (05.96-.)	Date to:1999.05,Wheelbase:3550 mm,for OE No.:2D0521101AM	Propshaft	PS900373
	1996.05-1999.08	MT	Rear	Van RWD AHD (05.96-.)	Date to:1999.05,Wheelbase:3550 mm,for OE No.:2D0521101AM	Propshaft	PS900373
	1996.05-1999.08		Centre	Bus RWD AHD (05.96-.)		Center Bearing Support	539009
	1996.05-1999.08		Centre	Van RWD AHD (05.96-.)		Center Bearing Support	539009
	1996.05-1999.08		Centre	Bus RWD AHD (05.96-.)		Center Bearing Support Kit	538995S
	1996.05-1999.08		Centre	Van RWD AHD (05.96-.)		Center Bearing Support Kit	538995S
	1996.06-1999.08	MT	Front	Platform/Chassis RWD AHD (06.96-.)	Date to:1999.05,wheel base:4025 mm	Propshaft	PS900568
	1996.06-1999.08	MT	Rear	Platform/Chassis RWD AHD (06.96-.)	Date to:1999.05,Wheelbase:3550 mm,for OE No.:2D0521101AM	Propshaft	PS900373
	1996.06-1999.08		Centre	Platform/Chassis RWD AHD (06.96-.)		Center Bearing Support	539009
	1996.06-1999.08		Centre	Platform/Chassis RWD AHD (06.96-.)		Center Bearing Support Kit	538995S
2.5 (80 kw)	1999.05-2006.07	MT	Front	Platform/Chassis RWD ANJ, AVR	wheel base:4025 mm	Propshaft	PS900568
	1999.05-2006.07	MT	Rear	Platform/Chassis RWD ANJ, AVR	Wheelbase:3550 mm,for OE No.:2D0521101AM	Propshaft	PS900373
	1999.05-2006.07	MT	Rear	Van RWD ANJ, AVR	Wheelbase:3550 mm,for OE No.:2D0521101AM	Propshaft	PS900373
	1999.05-2006.07	MT	Rear	Bus RWD ANJ, AVR	Wheelbase:3550 mm,for OE No.:2D0521101AM	Propshaft	PS900373
	1999.05-2006.07		Centre	Platform/Chassis RWD ANJ, AVR		Center Bearing Support	539009
	1999.05-2006.07		Centre	Van RWD ANJ, AVR		Center Bearing Support	539009
	1999.05-2006.07		Centre	Bus RWD ANJ, AVR		Center Bearing Support	539009
	1999.05-2006.07		Centre	Platform/Chassis RWD ANJ, AVR		Center Bearing Support Kit	538995S
	1999.05-2006.07		Centre	Van RWD ANJ, AVR		Center Bearing Support Kit	538995S
	1999.05-2006.07		Centre	Bus RWD ANJ, AVR		Center Bearing Support Kit	538995S
2.8 (92 kw)	1997.07-2002.01		Centre	Platform/Chassis RWD AGK		Center Bearing Support	539009
	1997.07-2002.01		Centre	Van RWD AGK		Center Bearing Support	539009
	1997.07-2002.01		Centre	Platform/Chassis RWD AGK		Center Bearing Support Kit	538995S
	1997.07-2002.01		Centre	Van RWD AGK		Center Bearing Support Kit	538995S
	1997.07-2003.05		Centre	Bus RWD AGK		Center Bearing Support	539009
	1997.07-2003.05		Centre	Bus RWD AGK		Center Bearing Support Kit	538995S
2.8 (96 kw)	1999.01-2006.07		Centre	Platform/Chassis RWD ATA		Center Bearing Support	539009
	1999.01-2006.07		Centre	Van RWD ATA		Center Bearing Support	539009

	YEAR	TRANSM.	FITTING POSITION	BODY STYLE & DRIVE TYPE & ENGINE	REMARKS	PRODUCT	GSP Ref.
VW							
LT 28							
2.8 (96 kw)	1999.01-2006.07		Centre	Platform/Chassis RWD ATA		Center Bearing Support Kit	538995S
	1999.01-2006.07		Centre	Van RWD ATA		Center Bearing Support Kit	538995S
2.8 (116 kw)	2001.05-2006.06	MT	Front	Bus RWD AUH, BCQ	Date from:2002.05	Propshaft	PS901377
	2001.05-2006.06		Centre	Bus RWD AUH, BCQ		Center Bearing Support	539009
	2001.05-2006.06		Centre	Bus RWD AUH, BCQ		Center Bearing Support Kit	538995S
	2002.04-2006.07	MT	Front	Platform/Chassis RWD AUH		Propshaft	PS901377
	2002.04-2006.07	MT	Front	Van RWD AUH, BCQ	Date from:2003.06	Propshaft	PS901377
	2002.04-2006.07		Centre	Platform/Chassis RWD AUH		Center Bearing Support	539009
	2002.04-2006.07		Centre	Van RWD AUH, BCQ		Center Bearing Support	539009
	2002.04-2006.07		Centre	Platform/Chassis RWD AUH		Center Bearing Support Kit	538995S
	2002.04-2006.07		Centre	Van RWD AUH, BCQ		Center Bearing Support Kit	538995S
LT 35							
2.8 (96 kw)	1999.01-2002.01		Centre	Bus RWD ATA		Center Bearing Support	539009
	1999.01-2002.01		Centre	Bus RWD ATA		Center Bearing Support Kit	538995S
Multivan							
1.9 (62 kw)	2006.01-2009.11		Centre	Bus FWD BRR		Center Bearing Support	538670
1.9 (63 kw)	2005.06-2009.11		Centre	Bus FWD AXC		Center Bearing Support	538670
1.9 (75 kw)	2006.01-2009.11		Centre	Bus FWD BRS		Center Bearing Support	538670
1.9 (77 kw)	2003.04-2009.11		Centre	Bus FWD AXB		Center Bearing Support	538670
2.0 (62 kw)	2009.09-2015.11		Centre	Bus FWD CAAA		Center Bearing Support	538670
2.0 (75 kw)	2009.09-2015.11		Centre	Bus FWD CAAB		Center Bearing Support	538670
2.0 (84 kw)	2011.05-2015.08		Centre	Bus FWD CAAD		Center Bearing Support	538670
2.0 (85 kw)	2003.11-2015.11		Centre	Bus FWD AXA		Center Bearing Support	538670
2.0 (100 kw)	2010.05-2015.11		Centre	Bus 4WD CAAE/CCHB		Center Bearing Support	538670
	2010.05-2015.11		Centre	Bus FWD CAAE/CCHB		Center Bearing Support	538670
	2010.05-2015.11		Front	Bus 4WD CAAE/CCHB		Center Bearing Support Kit	539920S
2.0 (103 kw)	2009.09-2015.11		Centre	Bus FWD CAAC/CCHA		Center Bearing Support	538670
	2009.09-2015.11		Centre	Bus 4WD CAAC/CCHA		Center Bearing Support	538670
	2009.09-2015.11		Front	Bus 4WD CAAC/CCHA		Center Bearing Support Kit	539920S
	2015.06-2019.12		Centre	Bus 4WD CAAC		Center Bearing Support Kit	539928S
2.0 (110 kw)	2012.07-2015.11		Centre	Bus FWD CJKB		Center Bearing Support	538670
	2015.08-		Front	Bus 4WD CXFA/CXHA/DNAA		Center Bearing Support Kit	539920S
	2015.08-		Centre	Bus 4WD CXFA/CXHA/DNAA		Center Bearing Support Kit	539928S
2.0 (132 kw)	2009.09-2015.11		Centre	Bus FWD CFCA		Center Bearing Support	538670
	2010.01-2015.11		Centre	Bus 4WD CFCA		Center Bearing Support	538670
	2010.01-2015.11		Front	Bus 4WD CFCA		Center Bearing Support Kit	539920S
	2015.04-2019.12		Centre	Bus 4WD CFCA		Center Bearing Support Kit	539928S
2.0 (146 kw)	2018.08-		Front	Bus 4WD CXEC		Center Bearing Support Kit	539920S
	2018.08-		Centre	Bus 4WD CXEC		Center Bearing Support Kit	539928S
2.0 (150 kw)	2011.05-2015.11		Centre	Bus FWD CJKA		Center Bearing Support	538670
	2011.07-2015.11		Centre	Bus 4WD CJKA		Center Bearing Support	538670
	2011.07-2015.11		Front	Bus 4WD CJKA		Center Bearing Support Kit	539920S
	2015.06-		Front	Bus 4WD CXEB/DMZA		Center Bearing Support Kit	539920S
	2015.06-		Centre	Bus 4WD CXEB/DMZA		Center Bearing Support Kit	539928S
	2015.06-2019.07		Centre	Bus 4WD CJKA		Center Bearing Support Kit	539928S
2.5 (96 kw)	2003.04-2009.11		Centre	Bus FWD AXD/BNZ		Center Bearing Support	538670
	2004.07-2009.11	6MT	Front	Bus 4WD AXD/BNZ		Propshaft	PS901375
	2004.07-2009.11	6AT/6MT	Rear	Bus 4WD AXD/BNZ	wheel base:3400mm,For PR code:0E2	Propshaft	PS900569
	2004.07-2009.11	6AT/6MT	Rear	Bus 4WD AXD/BNZ	wheel base:3000mm,For PR code:0E1	Propshaft	PS900570
	2004.07-2009.11	6AT/6MT	Rear	Bus 4WD AXD/BNZ	wheel base:3000mm,For PR code:0E1	Joint,propshaft	602478
	2004.07-2009.11		Front	Bus 4WD AXD/BNZ		Center Bearing Support	538614
	2004.07-2009.11		Rear	Bus 4WD AXD/BNZ		Center Bearing Support	538618
	2004.07-2009.11		Centre	Bus 4WD AXD/BNZ		Center Bearing Support	538670
	2004.07-2009.11		Front	Bus 4WD AXD/BNZ		Center Bearing Support Kit	539920S
2.5 (120 kw)	2003.11-2009.11		Centre	Bus FWD BLJ		Center Bearing Support	538670
2.5 (128 kw)	2003.04-2009.11		Centre	Bus FWD AXE/BPC		Center Bearing Support	538670
	2004.07-2009.11	6AT/6MT	Rear	Bus 4WD AXE/BPC	wheel base:3400mm,For PR code:0E2	Propshaft	PS900569
	2004.07-2009.11	6AT/6MT	Rear	Bus 4WD AXE/BPC	wheel base:3000mm,For PR code:0E1	Propshaft	PS900570
	2004.07-2009.11	6AT/6MT	Rear	Bus 4WD AXE/BPC	wheel base:3000mm,For PR code:0E1	Joint,propshaft	602478
	2004.07-2009.11		Front	Bus 4WD AXE/BPC		Center Bearing Support	538614
	2004.07-2009.11		Rear	Bus 4WD AXE/BPC		Center Bearing Support	538618
	2004.07-2009.11		Centre	Bus 4WD AXE/BPC		Center Bearing Support	538670
	2004.07-2009.11		Front	Bus 4WD AXE/BPC		Center Bearing Support Kit	539920S

	YEAR	TRANSM.	FITTING POSITION	BODY STYLE & DRIVE TYPE & ENGINE	REMARKS	PRODUCT	GSP Ref.
VW							
Multivan							
3.2 (173 kw)	2004.02-2009.12		Centre	Bus FWD BDL/BKK/CFLA		Center Bearing Support	538670
	2004.07-2009.12	6MT	Front	Bus 4WD BKK/CFLA		Propshaft	PS901375
	2004.07-2009.12	6MT	Rear	Bus 4WD BKK/CFLA	wheel base:3400mm,For PR code:0E2	Propshaft	PS900569
	2004.07-2009.12	6MT	Rear	Bus 4WD BKK/CFLA	wheel base:3000mm,For PR code:0E1	Propshaft	PS900570
	2004.07-2009.12	6MT	Rear	Bus 4WD BKK/CFLA	wheel base:3000mm,For PR code:0E1	Joint,propshaft	602478
	2004.07-2009.12		Front	Bus 4WD BKK/CFLA		Center Bearing Support	538614
	2004.07-2009.12		Rear	Bus 4WD BKK/CFLA		Center Bearing Support	538618
	2004.07-2009.12		Centre	Bus 4WD BKK/CFLA		Center Bearing Support	538670
	2004.07-2009.12		Front	Bus 4WD BKK/CFLA		Center Bearing Support Kit	539920S
New Beetle							
3.2 (165 kw)	2000.07-2001.05		Front	Hatchback 4WD AXJ		Flexible Coupling	537626
	2000.07-2001.05		Front	Hatchback 4WD AXJ		Flexible Coupling Kit	537626S
Passat							
1.4 (110 kw)	2014.08-		Front	Saloon 4WD CZEA		Flexible Coupling	537626
	2014.08-		Rear	Saloon 4WD CZEA		Flexible Coupling	533882
	2014.08-		Front	Saloon 4WD CZEA		Flexible Coupling Kit	537626S
	2014.08-		Rear	Saloon 4WD CZEA		Flexible Coupling Kit	533882S
1.6 (74 kw)	1996.10-2000.08		Front	Saloon FWD ADP/AHL/ANA/ARM		Flexible Coupling	537626
1.6 (75 kw)	2000.10-2005.05		Front	Saloon FWD ALZ		Flexible Coupling	537626
1.8 (92 kw)	1996.12-2000.08		Front	Saloon 4WD ADR/APT/ARG		Flexible Coupling	537626
	1996.12-2000.08		Front	Saloon FWD ADR/APT/ARG		Flexible Coupling	537626
1.8 (110 kw)	1996.10-2000.11		Front	Saloon FWD AEB/ANB/APU		Flexible Coupling	537626
	2000.11-2005.05		Front	Saloon FWD AWT		Flexible Coupling	537626
1.9 (66 kw)	1996.10-2000.08		Front	Saloon FWD AHH/AHU		Flexible Coupling	537626
1.9 (74 kw)	2000.02-2000.11		Front	Saloon FWD AVB		Flexible Coupling	537626
	2000.11-2005.05		Front	Saloon FWD AVB		Flexible Coupling	537626
1.9 (81 kw)	1996.10-2000.08		Front	Saloon FWD AFN/AVG		Flexible Coupling	537626
	1997.06-2000.08		Front	Saloon 4WD AFN/AVG		Flexible Coupling	537626
1.9 (85 kw)	1999.01-2000.08		Front	Saloon FWD AJM/ATJ		Flexible Coupling	537626
	2000.01-2000.08		Front	Saloon 4WD ATJ		Flexible Coupling	537626
1.9 (96 kw)	2000.10-2005.05		Front	Saloon 4WD AVF		Flexible Coupling	537626
	2000.10-2005.05		Front	Saloon FWD AVF/AWX		Flexible Coupling	537626
2.0 (85 kw)	2000.10-2005.05		Front	Saloon 4WD AZM		Flexible Coupling	537626
	2000.10-2005.05		Front	Saloon FWD AZM		Flexible Coupling	537626
2.0 (88 kw)	2000.01-2000.08		Front	Saloon FWD ASU/AUZ		Flexible Coupling	537626
	2000.01-2000.08		Front	Saloon 4WD ASU		Flexible Coupling	537626
2.0 (96 kw)	2001.11-2005.05		Front	Saloon FWD ALT		Flexible Coupling	537626
2.0 (100 kw)	2003.11-2005.12		Front	Saloon FWD BGW/BHW		Flexible Coupling	537626
2.0 (103 kw)	2005.03-2008.05		Front	Saloon 4WD BMP		Flexible Coupling	537626
	2005.03-2008.05		Rear	Saloon 4WD BMP		Flexible Coupling	533882
	2005.03-2008.05		Front	Saloon 4WD BMP		Flexible Coupling Kit	537626S
	2005.03-2008.05		Rear	Saloon 4WD BMP		Flexible Coupling Kit	533882S
	2005.03-2010.07		Front	Saloon 4WD BKP/CBAB		Flexible Coupling	537626
	2005.03-2010.07		Rear	Saloon 4WD BKP/CBAB		Flexible Coupling	533882
	2005.03-2010.07		Front	Saloon 4WD BKP/CBAB		Flexible Coupling Kit	537626S
	2005.03-2010.07		Rear	Saloon 4WD BKP/CBAB		Flexible Coupling Kit	533882S
	2010.08-2014.12		Front	Saloon FWD CFFB		Flexible Coupling	537626
	2010.11-2014.12		Front	Saloon 4WD CFFB		Flexible Coupling	537626
	2010.11-2014.12		Rear	Saloon 4WD CFFB		Flexible Coupling	533882
	2010.11-2014.12		Rear	Saloon 4WD CFFB		Flexible Coupling Kit	533882S
2.0 (110 kw)	2005.03-2010.11		Front	Saloon 4WD BLX/BLY/BVX		Flexible Coupling	537626
	2005.03-2010.11		Rear	Saloon 4WD BLX/BLY/BVX		Flexible Coupling	533882
	2005.03-2010.11		Front	Saloon 4WD BLX/BLY/BVX		Flexible Coupling Kit	537626S
	2005.03-2010.11		Rear	Saloon 4WD BLX/BLY/BVX		Flexible Coupling Kit	533882S
	2014.08-		Front	Saloon 4WD CRLB/DFEA/DFGA/DTSA		Flexible Coupling	537626
	2014.08-		Rear	Saloon 4WD CRLB/DFEA/DFGA/DTSA		Flexible Coupling	533882
	2014.08-		Front	Saloon 4WD CRLB/DFEA/DFGA/DTSA		Flexible Coupling Kit	537626S
	2014.08-		Rear	Saloon 4WD CRLB/DFEA/DFGA/DTSA		Flexible Coupling Kit	533882S
2.0 (125 kw)	2009.05-2010.11		Front	Saloon 4WD CBBB		Flexible Coupling	537626
	2009.05-2010.11		Rear	Saloon 4WD CBBB		Flexible Coupling	533882
	2009.05-2010.11		Front	Saloon 4WD CBBB		Flexible Coupling Kit	537626S
	2009.05-2010.11		Rear	Saloon 4WD CBBB		Flexible Coupling Kit	533882S
	2010.08-2014.12		Front	Saloon FWD CFGB/CLLA		Flexible Coupling	537626
	2010.11-2013.01		Front	Saloon 4WD CFGB		Flexible Coupling	537626

	YEAR	TRANSM.	FITTING POSITION	BODY STYLE & DRIVE TYPE & ENGINE	REMARKS	PRODUCT	GSP Ref.
VW							
Passat							
2.0 (125 kw)	2010.11-2013.01		Rear	Saloon 4WD CFGB		Flexible Coupling	533882
	2010.11-2013.01		Rear	Saloon 4WD CFGB		Flexible Coupling Kit	533882S
2.0 (130 kw)	2013.01-2014.12		Rear	Saloon 4WD CFGC		Flexible Coupling	533882
	2013.01-2014.12		Rear	Saloon 4WD CFGC		Flexible Coupling Kit	533882S
2.0 (140 kw)	2014.11-		Front	Saloon 4WD DDAA/DFCA/DFHA		Flexible Coupling	537626
	2014.11-		Rear	Saloon 4WD DDAA/DFCA/DFHA		Flexible Coupling	533882
	2014.11-		Front	Saloon 4WD DDAA/DFCA/DFHA		Flexible Coupling Kit	537626S
	2014.11-		Rear	Saloon 4WD DDAA/DFCA/DFHA		Flexible Coupling Kit	533882S
	2014.11-		Rear	Saloon FWD DDAA/DFCA/DFHA		Flexible Coupling Kit	533882S
2.0 (147 kw)	2020.08-		Front	Saloon 4WD DTUA		Flexible Coupling	537626
	2020.08-		Rear	Saloon 4WD DTUA		Flexible Coupling	533882
	2020.08-		Front	Saloon 4WD DTUA		Flexible Coupling Kit	537626S
	2020.08-		Rear	Saloon 4WD DTUA		Flexible Coupling Kit	533882S
2.0 (176 kw)	2014.08-		Front	Saloon 4WD CUAA		Flexible Coupling	537626
	2014.08-		Rear	Saloon 4WD CUAA		Flexible Coupling	533882
	2014.08-		Front	Saloon 4WD CUAA		Flexible Coupling Kit	537626S
	2014.08-		Rear	Saloon 4WD CUAA		Flexible Coupling Kit	533882S
2.0 (200 kw)	2018.09-		Front	Saloon 4WD DNUA		Flexible Coupling	537626
	2018.09-		Rear	Saloon 4WD DNUA		Flexible Coupling	533882
	2018.09-		Front	Saloon 4WD DNUA		Flexible Coupling Kit	537626S
	2018.09-		Rear	Saloon 4WD DNUA		Flexible Coupling Kit	533882S
2.0 (206 kw)	2014.08-		Front	Saloon 4WD CJXA/DNFE		Flexible Coupling	537626
	2014.08-		Rear	Saloon 4WD CJXA/DNFE		Flexible Coupling	533882
	2014.08-		Front	Saloon 4WD CJXA/DNFE		Flexible Coupling Kit	537626S
	2014.08-		Rear	Saloon 4WD CJXA/DNFE		Flexible Coupling Kit	533882S
2.3 (110 kw)	1996.11-2000.08		Front	Saloon FWD AGZ		Flexible Coupling	537626
	1997.05-2000.08		Front	Saloon 4WD AGZ		Flexible Coupling	537626
2.3 (125 kw)	2000.09-2005.03		Front	Saloon FWD AZX		Flexible Coupling	537626
	2001.01-2005.05		Front	Saloon 4WD AZX		Flexible Coupling	537626
2.5 (110 kw)	1998.07-2000.08		Front	Saloon FWD AFB/AKN		Flexible Coupling	537626
	1999.02-2000.08		Front	Saloon 4WD AFB		Flexible Coupling	537626
	2000.09-2003.01		Front	Saloon 4WD AKN		Flexible Coupling	537626
	2000.09-2003.05		Front	Saloon FWD AKN		Flexible Coupling	537626
2.5 (120 kw)	2003.05-2005.05		Front	Saloon FWD BDG		Flexible Coupling	537626
2.5 (132 kw)	2003.01-2005.05		Front	Saloon 4WD BAU/BDH		Flexible Coupling	537626
2.8 (142 kw)	1997.06-2000.08		Front	Saloon FWD APR/AQD		Flexible Coupling	537626
	1997.06-2000.11		Front	Saloon 4WD ACK/ALG/APR/AQD		Flexible Coupling	537626
	2000.11-2005.05		Front	Saloon 4WD AMX/ATQ		Flexible Coupling	537626
3.2 (184 kw)	2005.09-2010.11		Front	Saloon 4WD AXZ		Flexible Coupling	537626
	2005.09-2010.11		Front	Saloon 4WD AXZ		Flexible Coupling Kit	537626S
3.6 (206 kw)	2005.09-2010.07		Front	Saloon 4WD BLV		Flexible Coupling	537626
	2005.09-2010.07		Front	Saloon 4WD BLV		Flexible Coupling Kit	537626S
	2006.09-2007.12		Front	Estate 4WD BLV		Flexible Coupling	537626
	2006.09-2007.12		Front	Estate 4WD BLV		Flexible Coupling Kit	537626S
3.6 (220 kw)	2007.04-2010.11		Front	Saloon 4WD BWS		Flexible Coupling	537626
	2007.04-2010.11		Front	Saloon 4WD BWS		Flexible Coupling Kit	537626S
4.0 (202 kw)	2001.09-2004.09		Front	Saloon 4WD BDN/BDP		Flexible Coupling	537626
Passat Alltrack							
1.4 (110 kw)	2015.05-		Front	Estate 4WD CZEA		Flexible Coupling	537626
	2015.05-		Rear	Estate 4WD CZEA		Flexible Coupling	533882
	2015.05-		Front	Estate 4WD CZEA		Flexible Coupling Kit	537626S
	2015.05-		Rear	Estate 4WD CZEA		Flexible Coupling Kit	533882S
2.0 (103 kw)	2010.11-2014.12		Rear	Estate 4WD CFFB		Flexible Coupling	533882
	2010.11-2014.12		Front	Estate 4WD CFFB		Flexible Coupling Kit	537626S
	2010.11-2014.12		Rear	Estate 4WD CFFB		Flexible Coupling Kit	533882S
2.0 (110 kw)	2015.05-2017.11		Front	Estate 4WD CRLB/DFEA/DFGA		Flexible Coupling	537626
	2015.05-2017.11		Rear	Estate 4WD CRLB/DFEA/DFGA		Flexible Coupling	533882
	2015.05-2017.11		Front	Estate 4WD CRLB/DFEA/DFGA		Flexible Coupling Kit	537626S
	2015.05-2017.11		Rear	Estate 4WD CRLB/DFEA/DFGA		Flexible Coupling Kit	533882S
2.0 (125 kw)	2010.11-2013.01		Rear	Estate 4WD CFGB		Flexible Coupling	533882
	2010.11-2013.01		Front	Estate 4WD CFGB		Flexible Coupling Kit	537626S
	2010.11-2013.01		Rear	Estate 4WD CFGB		Flexible Coupling Kit	533882S
2.0 (130 kw)	2013.01-2014.12		Rear	Estate 4WD CFGC		Flexible Coupling	533882
	2013.01-2014.12		Front	Estate 4WD CFGC		Flexible Coupling Kit	537626S

	YEAR	TRANSM.	FITTING POSITION	BODY STYLE & DRIVE TYPE & ENGINE	REMARKS	PRODUCT	GSP Ref.
VW							
Passat Alltrack							
2.0 (130 kw)	2013.01-2014.12		Rear	Estate 4WD CFGC		Flexible Coupling Kit	533882S
2.0 (135 kw)	2015.07-		Front	Estate 4WD CUPA		Flexible Coupling	537626
	2015.07-		Rear	Estate 4WD CUPA		Flexible Coupling	533882
	2015.07-		Front	Estate 4WD CUPA		Flexible Coupling Kit	537626S
	2015.07-		Rear	Estate 4WD CUPA		Flexible Coupling Kit	533882S
2.0 (140 kw)	2015.05-		Front	Estate 4WD DDAA/DFCA/DFHA		Flexible Coupling	537626
	2015.05-		Rear	Estate 4WD DDAA/DFCA/DFHA		Flexible Coupling	533882
	2015.05-		Front	Estate 4WD DDAA/DFCA/DFHA		Flexible Coupling Kit	537626S
	2015.05-		Rear	Estate 4WD DDAA/DFCA/DFHA		Flexible Coupling Kit	533882S
2.0 (155 kw)	2012.01-2014.12		Rear	Estate 4WD CCZB		Flexible Coupling	533882
	2012.01-2014.12		Front	Estate 4WD CCZB		Flexible Coupling Kit	537626S
	2012.01-2014.12		Rear	Estate 4WD CCZB		Flexible Coupling Kit	533882S
2.0 (162 kw)	2015.07-		Front	Estate 4WD CHHB		Flexible Coupling	537626
	2015.07-		Rear	Estate 4WD CHHB		Flexible Coupling	533882
	2015.07-		Front	Estate 4WD CHHB		Flexible Coupling Kit	537626S
	2015.07-		Rear	Estate 4WD CHHB		Flexible Coupling Kit	533882S
2.0 (176 kw)	2015.05-		Front	Estate 4WD CUAA		Flexible Coupling	537626
	2015.05-		Rear	Estate 4WD CUAA		Flexible Coupling	533882
	2015.05-		Front	Estate 4WD CUAA		Flexible Coupling Kit	537626S
	2015.05-		Rear	Estate 4WD CUAA		Flexible Coupling Kit	533882S
2.0 (200 kw)	2018.08-		Front	Estate 4WD DNUA		Flexible Coupling	537626
	2018.08-		Rear	Estate 4WD DNUA		Flexible Coupling	533882
	2018.08-		Front	Estate 4WD DNUA		Flexible Coupling Kit	537626S
	2018.08-		Rear	Estate 4WD DNUA		Flexible Coupling Kit	533882S
2.0 (206 kw)	2018.11-		Front	Estate 4WD CJXA/DNFE		Flexible Coupling	537626
	2018.11-		Rear	Estate 4WD CJXA/DNFE		Flexible Coupling	533882
	2018.11-		Front	Estate 4WD CJXA/DNFE		Flexible Coupling Kit	537626S
	2018.11-		Rear	Estate 4WD CJXA/DNFE		Flexible Coupling Kit	533882S
Passat CC							
2.0 (103 kw)	2008.05-2011.12		Front	Coupe 4WD CBAB/CFFB		Flexible Coupling	537626
	2008.05-2011.12		Rear	Coupe 4WD CBAB/CFFB		Flexible Coupling	533882
	2008.05-2011.12		Front	Coupe 4WD CBAB/CFFB		Flexible Coupling Kit	537626S
	2008.05-2011.12		Rear	Coupe 4WD CBAB/CFFB		Flexible Coupling Kit	533882S
2.0 (125 kw)	2009.11-2011.12		Front	Coupe 4WD CBBB/CFGB		Flexible Coupling	537626
	2009.11-2011.12		Rear	Coupe 4WD CBBB/CFGB		Flexible Coupling	533882
	2009.11-2011.12		Front	Coupe 4WD CBBB/CFGB		Flexible Coupling Kit	537626S
	2009.11-2011.12		Rear	Coupe 4WD CBBB/CFGB		Flexible Coupling Kit	533882S
3.6 (220 kw)	2008.02-2011.12		Front	Coupe 4WD BWS		Flexible Coupling	537626
	2008.02-2011.12		Front	Coupe 4WD BWS		Flexible Coupling Kit	537626S
Passat Estate/Variant							
1.4 (110 kw)	2014.08-		Front	Estate 4WD CZEA		Flexible Coupling	537626
	2014.08-		Rear	Estate 4WD CZEA		Flexible Coupling	533882
	2014.08-		Front	Estate 4WD CZEA		Flexible Coupling Kit	537626S
	2014.08-		Rear	Estate 4WD CZEA		Flexible Coupling Kit	533882S
2.0 (103 kw)	2005.03-2010.11		Front	Estate 4WD BKP/CBAB		Flexible Coupling	537626
	2005.03-2010.11		Rear	Estate 4WD BKP/CBAB		Flexible Coupling	533882
	2005.03-2010.11		Front	Estate 4WD BKP/CBAB		Flexible Coupling Kit	537626S
	2005.03-2010.11		Rear	Estate 4WD BKP/CBAB		Flexible Coupling Kit	533882S
	2005.08-2008.05		Front	Estate 4WD BMP		Flexible Coupling	537626
	2005.08-2008.05		Rear	Estate 4WD BMP		Flexible Coupling	533882
	2005.08-2008.05		Front	Estate 4WD BMP		Flexible Coupling Kit	537626S
	2005.08-2008.05		Rear	Estate 4WD BMP		Flexible Coupling Kit	533882S
	2010.08-2014.12		Front	Estate FWD CFFB		Flexible Coupling	537626
	2010.11-2014.12		Front	Estate 4WD CFFB		Flexible Coupling	537626
	2010.11-2014.12		Rear	Estate 4WD CFFB		Flexible Coupling	533882
	2010.11-2014.12		Front	Estate 4WD CFFB		Flexible Coupling Kit	537626S
	2010.11-2014.12		Rear	Estate 4WD CFFB		Flexible Coupling Kit	533882S
2.0 (110 kw)	2005.09-2010.11		Front	Estate 4WD BLX/BLY/BVX		Flexible Coupling	537626
	2005.09-2010.11		Rear	Estate 4WD BLX/BLY/BVX		Flexible Coupling	533882
	2005.09-2010.11		Front	Estate 4WD BLX/BLY/BVX		Flexible Coupling Kit	537626S
	2005.09-2010.11		Rear	Estate 4WD BLX/BLY/BVX		Flexible Coupling Kit	533882S
	2014.08-		Front	Estate 4WD CRLB/DFEA/DFGA/DTSA		Flexible Coupling	537626
	2014.08-		Rear	Estate 4WD CRLB/DFEA/DFGA/DTSA		Flexible Coupling	533882
	2014.08-		Front	Estate 4WD CRLB/DFEA/DFGA/DTSA		Flexible Coupling Kit	537626S

	YEAR	TRANSM.	FITTING POSITION	BODY STYLE & DRIVE TYPE & ENGINE	REMARKS	PRODUCT	GSP Ref.
VW							
Passat Estate/Variant							
2.0 (110 kw)	2014.08-		Rear	Estate 4WD CRLB/DFEA/DFGA/DTSA		Flexible Coupling Kit	533882S
2.0 (125 kw)	2009.11-2010.11		Front	Estate 4WD CBBB		Flexible Coupling	537626
	2009.11-2010.11		Rear	Estate 4WD CBBB		Flexible Coupling	533882
	2009.11-2010.11		Front	Estate 4WD CBBB		Flexible Coupling Kit	537626S
	2009.11-2010.11		Rear	Estate 4WD CBBB		Flexible Coupling Kit	533882S
	2010.08-2013.01		Front	Estate 4WD CFGB		Flexible Coupling	537626
	2010.08-2013.01		Rear	Estate 4WD CFGB		Flexible Coupling	533882
	2010.08-2013.01		Front	Estate 4WD CFGB		Flexible Coupling Kit	537626S
	2010.08-2013.01		Rear	Estate 4WD CFGB		Flexible Coupling Kit	533882S
	2010.08-2014.12		Front	Estate FWD CFGB/CLLA		Flexible Coupling	537626
2.0 (130 kw)	2013.01-2014.12		Rear	Estate 4WD CFGC		Flexible Coupling	533882
	2013.01-2014.12		Front	Estate 4WD CFGC		Flexible Coupling Kit	537626S
	2013.01-2014.12		Rear	Estate 4WD CFGC		Flexible Coupling Kit	533882S
2.0 (140 kw)	2014.11-		Front	Estate 4WD DDAA/DFCA/DFHA		Flexible Coupling	537626
	2014.11-		Rear	Estate 4WD DDAA/DFCA/DFHA		Flexible Coupling	533882
	2014.11-		Front	Estate 4WD DDAA/DFCA/DFHA		Flexible Coupling Kit	537626S
	2014.11-		Rear	Estate 4WD DDAA/DFCA/DFHA		Flexible Coupling Kit	533882S
	2014.11-		Rear	Estate FWD DDAA/DFCA/DFHA		Flexible Coupling Kit	533882S
2.0 (147 kw)	2020.08-		Front	Estate 4WD DTUA		Flexible Coupling	537626
	2020.08-		Rear	Estate 4WD DTUA		Flexible Coupling	533882
	2020.08-		Front	Estate 4WD DTUA		Flexible Coupling Kit	537626S
	2020.08-		Rear	Estate 4WD DTUA		Flexible Coupling Kit	533882S
2.0 (176 kw)	2014.08-		Front	Estate 4WD CUAA		Flexible Coupling	537626
	2014.08-		Rear	Estate 4WD CUAA		Flexible Coupling	533882
	2014.08-		Front	Estate 4WD CUAA		Flexible Coupling Kit	537626S
	2014.08-		Rear	Estate 4WD CUAA		Flexible Coupling Kit	533882S
2.0 (200 kw)	2018.09-		Front	Estate 4WD DNUA		Flexible Coupling	537626
	2018.09-		Rear	Estate 4WD DNUA		Flexible Coupling	533882
	2018.09-		Front	Estate 4WD DNUA		Flexible Coupling Kit	537626S
	2018.09-		Rear	Estate 4WD DNUA		Flexible Coupling Kit	533882S
2.0 (206 kw)	2014.08-		Front	Estate 4WD CJXA/DNFE		Flexible Coupling	537626
	2014.08-		Rear	Estate 4WD CJXA/DNFE		Flexible Coupling	533882
	2014.08-		Front	Estate 4WD CJXA/DNFE		Flexible Coupling Kit	537626S
	2014.08-		Rear	Estate 4WD CJXA/DNFE		Flexible Coupling Kit	533882S
3.2 (184 kw)	2005.09-2010.11		Front	Estate 4WD AXZ		Flexible Coupling	537626
	2005.09-2010.11		Front	Estate 4WD AXZ		Flexible Coupling Kit	537626S
3.6 (220 kw)	2007.04-2010.11		Front	Estate 4WD BWS		Flexible Coupling	537626
	2007.04-2010.11		Front	Estate 4WD BWS		Flexible Coupling Kit	537626S
	2011.01-2014.12		Front	Estate 4WD BWS		Flexible Coupling	537626
	2011.01-2014.12		Front	Estate 4WD BWS		Flexible Coupling Kit	537626S
Phaeton							
6.0 (309 kw)	2002.05-2005.12	AT	Rear	Saloon 4WD BAN		Propshaft	PS901661
6.0 (331 kw)	2005.05-2016.03	AT	Rear	Saloon 4WD BRN/BTT		Propshaft	PS901661
Sharan							
1.9 (85 kw)	2000.03-2010.03		Rear	MPV 4WD AUY/BVK		Flexible Coupling Kit	538520S
2.0 (103 kw)	2011.05-2015.11		Front	MPV 4WD CFFB		Flexible Coupling	537626
	2011.05-2015.11		Rear	MPV 4WD CFFB		Flexible Coupling	533882
	2011.05-2015.11		Front	MPV 4WD CFFB		Flexible Coupling Kit	537626S
	2011.05-2015.11		Rear	MPV 4WD CFFB		Flexible Coupling Kit	533882S
2.0 (110 kw)	2015.05-2019.07		Rear	MPV 4WD CUVC/DFLA/DLTA		Flexible Coupling	533882
	2015.05-2019.07		Rear	MPV 4WD CUVC/DFLA/DLTA		Flexible Coupling Kit	533882S
2.0 (135 kw)	2016.05-2018.07		Rear	MPV 4WD DFMA		Flexible Coupling	533882
	2016.05-2018.07		Rear	MPV 4WD DFMA		Flexible Coupling Kit	533882S
2.8 (128 kw)	1995.09-2000.02		Front	MPV 4WD AAA/AMY		Flexible Coupling	538507
	1995.09-2000.02		Front	MPV 4WD AAA/AMY		Flexible Coupling Kit	538508S
2.8 (150 kw)	2000.03-2010.03		Rear	MPV 4WD AYL		Flexible Coupling Kit	538520S
T-Roc							
1.5 (110 kw)	2018.05-2019.11		Front	SUV 4WD DADA/DPCA		Flexible Coupling	537626
	2018.05-2019.11		Rear	SUV 4WD DADA/DPCA		Flexible Coupling	533882
	2018.05-2019.11		Front	SUV 4WD DADA/DPCA		Flexible Coupling Kit	537626S
	2018.05-2019.11		Rear	SUV 4WD DADA/DPCA		Flexible Coupling Kit	533882S
2.0 (110 kw)	2017.09-	MT	Rear	SUV 4WD DFFA/DTTC		Propshaft	PS900584
	2017.09-		Front	SUV 4WD DFFA/DTTC		Flexible Coupling	537626
	2017.09-		Rear	SUV 4WD DFFA/DTTC		Flexible Coupling	533882

	YEAR	TRANSM.	FITTING POSITION	BODY STYLE & DRIVE TYPE & ENGINE	REMARKS	PRODUCT	GSP Ref.
VW							
T-Roc							
2.0 (110 kw)	2017.09-		Front	SUV 4WD DFFA/DTTC		Flexible Coupling Kit	537626S
	2017.09-		Rear	SUV 4WD DFFA/DTTC		Flexible Coupling Kit	533882S
2.0 (140 kw)	2017.07-		Front	SUV 4WD CZPB/DKZA/DNNA		Flexible Coupling	537626
	2017.07-		Rear	SUV 4WD CZPB/DKZA/DNNA		Flexible Coupling	533882
	2017.07-		Front	SUV 4WD CZPB/DKZA/DNNA		Flexible Coupling Kit	537626S
	2017.07-		Rear	SUV 4WD CZPB/DKZA/DNNA		Flexible Coupling Kit	533882S
	2019.07-2021.06	AT	Rear	SUV 4WD DFHA		Propshaft	PS900584
	2019.07-2021.06		Front	SUV 4WD DFHA		Flexible Coupling	537626
	2019.07-2021.06		Rear	SUV 4WD DFHA		Flexible Coupling	533882
	2019.07-2021.06		Front	SUV 4WD DFHA		Flexible Coupling Kit	537626S
	2019.07-2021.06		Rear	SUV 4WD DFHA		Flexible Coupling Kit	533882S
2.0 (221 kw)	2019.09-		Front	SUV 4WD DNFC/DNUE		Flexible Coupling	537626
	2019.09-		Rear	SUV 4WD DNFC/DNUE		Flexible Coupling	533882
	2019.09-		Front	SUV 4WD DNFC/DNUE		Flexible Coupling Kit	537626S
	2019.09-		Rear	SUV 4WD DNFC/DNUE		Flexible Coupling Kit	533882S
Taro							
2.4 (58 kw)	1994.07-1997.03		Centre	Pickup 4WD 2L		Center Bearing Support	539022
2.4 (61 kw)	1989.04-1997.03		Centre	Pickup 4WD 2L		Center Bearing Support	539022
2.4 (84 kw)	1989.06-1997.03		Centre	Pickup 4WD 22R		Center Bearing Support	539022
Teramont							
2.0 (162 kw)	2017.12-		Front	SUV 4WD CXDA		Flexible Coupling	537626
	2017.12-		Rear	SUV 4WD CXDA		Flexible Coupling	533882
	2017.12-		Front	SUV 4WD CXDA		Flexible Coupling Kit	537626S
	2017.12-		Rear	SUV 4WD CXDA		Flexible Coupling Kit	533882S
3.6 (206 kw)	2016.12-		Front	SUV 4WD CDVC		Flexible Coupling	537626
	2016.12-		Rear	SUV 4WD CDVC		Flexible Coupling	533882
	2016.12-		Front	SUV 4WD CDVC		Flexible Coupling Kit	537626S
	2016.12-		Rear	SUV 4WD CDVC		Flexible Coupling Kit	533882S
Tiguan							
1.4 (110 kw)	2007.11-2018.07	MT	Rear	SUV 4WD BWK/CAVA/CTHA	Model:5N1;For PR code:5C0/5C6,Model:5N2	Propshaft	PS900520
	2007.11-2018.07		Centre	SUV 4WD BWK/CAVA/CTHA		Center Bearing Support	538658
	2007.11-2018.07		Centre	SUV 4WD BWK/CAVA/CTHA	Model year from:2008,Model year to:2011	Center Bearing Support Kit	538695S
	2007.11-2018.07		Rear	SUV 4WD BWK/CAVA/CTHA		Flexible Coupling	533882
	2007.11-2018.07		Front	SUV 4WD BWK/CAVA/CTHA		Flexible Coupling Kit	537626S
	2007.11-2018.07		Rear	SUV 4WD BWK/CAVA/CTHA		Flexible Coupling Kit	533882S
	2008.05-2018.07		Centre	SUV FWD CAVA/CTHA		Center Bearing Support	538658
	2016.03-		Front	SUV 4WD CZDA/CZEA		Flexible Coupling	537626
	2016.03-		Rear	SUV 4WD CZDA/CZEA		Flexible Coupling	533882
	2016.03-		Front	SUV 4WD CZDA/CZEA		Flexible Coupling Kit	537626S
	2016.03-		Rear	SUV 4WD CZDA/CZEA		Flexible Coupling Kit	533882S
1.4 (118 kw)	2011.05-2018.07	MT	Rear	SUV 4WD CAVD/CTHD	For PR code:5C0/5C6	Propshaft	PS900520
	2011.05-2018.07	MT	Rear	SUV FWD CAVD/CTHD	For PR code:5C0	Propshaft	PS900520
	2011.05-2018.07		Centre	SUV 4WD CAVD/CTHD		Center Bearing Support	538658
	2011.05-2018.07		Centre	SUV FWD CAVD/CTHD		Center Bearing Support	538658
	2011.05-2018.07		Centre	SUV 4WD CAVD/CTHD	Model year from:2012	Center Bearing Support Kit	538695S
	2011.05-2018.07		Centre	SUV FWD CAVD/CTHD		Center Bearing Support Kit	538695S
	2011.05-2018.07		Rear	SUV 4WD CAVD/CTHD		Flexible Coupling	533882
	2011.05-2018.07		Front	SUV 4WD CAVD/CTHD		Flexible Coupling Kit	537626S
	2011.05-2018.07		Rear	SUV 4WD CAVD/CTHD		Flexible Coupling Kit	533882S
	2012.09-2018.07		Rear	SUV Van 4WD CTHD		Flexible Coupling	533882
	2012.09-2018.07		Rear	SUV Van 4WD CTHD		Flexible Coupling Kit	533882S
2.0 (100 kw)	2007.11-2018.07	MT	Rear	SUV 4WD CBAA/CFFA	Model:5N1;For PR code:5C0/5C6,Model:5N2	Propshaft	PS900520
	2007.11-2018.07		Centre	SUV 4WD CBAA/CFFA		Center Bearing Support	538658
	2007.11-2018.07		Centre	SUV 4WD CBAA/CFFA	Model year from:2008,Model year to:2011	Center Bearing Support Kit	538695S
	2007.11-2018.07		Rear	SUV 4WD CBAA/CFFA		Flexible Coupling	533882
	2007.11-2018.07		Front	SUV 4WD CBAA/CFFA		Flexible Coupling Kit	537626S
	2007.11-2018.07		Rear	SUV 4WD CBAA/CFFA		Flexible Coupling Kit	533882S
2.0 (103 kw)	2007.11-2018.07	MT	Rear	SUV 4WD CBAB/CFFB/CLJA	Model:5N1;For PR code:5C0/5C6,Model:5N2	Propshaft	PS900520
	2007.11-2018.07		Centre	SUV 4WD CBAB/CFFB/CLJA		Center Bearing Support	538658
	2007.11-2018.07		Centre	SUV FWD CBAB/CFFB		Center Bearing Support	538658
	2007.11-2018.07		Centre	SUV 4WD CBAB/CFFB/CLJA	Model year from:2008,Model year to:2011	Center Bearing Support Kit	538695S
	2007.11-2018.07		Centre	SUV Van 4WD CBAB/CFFB/CLJA		Center Bearing Support Kit	538695S
	2007.11-2018.07		Front	SUV 4WD CBAB/CFFB/CLJA		Flexible Coupling	537626
	2007.11-2018.07		Rear	SUV 4WD CBAB/CFFB/CLJA		Flexible Coupling	533882

	YEAR	TRANSM.	FITTING POSITION	BODY STYLE & DRIVE TYPE & ENGINE	REMARKS	PRODUCT	GSP Ref.
VW **Tiguan**							
2.0 (103 kw)	2007.11-2018.07		Rear	SUV Van 4WD CBAB/CFFB/CLJA		Flexible Coupling	533882
	2007.11-2018.07		Front	SUV 4WD CBAB/CFFB/CLJA		Flexible Coupling Kit	537626S
	2007.11-2018.07		Rear	SUV 4WD CBAB/CFFB/CLJA		Flexible Coupling Kit	533882S
	2007.11-2018.07		Rear	SUV Van 4WD CBAB/CFFB/CLJA		Flexible Coupling Kit	533882S
2.0 (105 kw)	2016.06-2020.07		Front	SUV 4WD CRFD		Flexible Coupling	537626
	2016.06-2020.07		Rear	SUV 4WD CRFD		Flexible Coupling	533882
	2016.06-2020.07		Front	SUV 4WD CRFD		Flexible Coupling Kit	537626S
	2016.06-2020.07		Rear	SUV 4WD CRFD		Flexible Coupling Kit	533882S
2.0 (110 kw)	2015.05-2018.07	MT	Rear	SUV 4WD CUVC	Date to:2015.08,For PR code:5C0;Date from:2015.08,For PR code:G1D+5C0	Propshaft	PS900520
	2015.05-2018.07		Centre	SUV 4WD CUVC		Center Bearing Support Kit	538695S
	2015.05-2018.07		Rear	SUV 4WD CUVC		Flexible Coupling	533882
	2015.05-2018.07		Front	SUV 4WD CUVC		Flexible Coupling Kit	537626S
	2015.05-2018.07		Rear	SUV 4WD CUVC		Flexible Coupling Kit	533882S
	2016.01-		Front	SUV 4WD DBGC/DFGA/DTSA/DTSB		Flexible Coupling	537626
	2016.01-		Rear	SUV 4WD DBGC/DFGA/DTSA/DTSB		Flexible Coupling	533882
	2016.01-		Front	SUV 4WD DBGC/DFGA/DTSA/DTSB		Flexible Coupling Kit	537626S
	2016.01-		Rear	SUV 4WD DBGC/DFGA/DTSA/DTSB		Flexible Coupling Kit	533882S
2.0 (120 kw)	2008.02-2009.08	MT	Rear	SUV 4WD CBBA		Propshaft	PS900520
	2008.02-2009.08		Centre	SUV 4WD CBBA		Center Bearing Support	538658
	2008.02-2009.08		Centre	SUV 4WD CBBA		Center Bearing Support Kit	538695S
	2008.02-2009.08		Rear	SUV 4WD CBBA		Flexible Coupling	533882
	2008.02-2009.08		Front	SUV 4WD CBBA		Flexible Coupling Kit	537626S
	2008.02-2009.08		Rear	SUV 4WD CBBA		Flexible Coupling Kit	533882S
2.0 (125 kw)	2008.01-2018.07	MT	Rear	SUV 4WD CAWA/CCTB/CCZC	Date from:2008.01,Model:5N1;Date from:2008.01,For PR code:5C0/5C6,Model:5N2	Propshaft	PS900520
	2008.01-2018.07		Centre	SUV 4WD CAWA/CCTB/CCZC		Center Bearing Support	538658
	2008.01-2018.07		Centre	SUV 4WD CAWA/CCTB/CCZC	Model year from:2008,Model year to:2011	Center Bearing Support Kit	538695S
	2008.01-2018.07		Rear	SUV 4WD CAWA/CCTB/CCZC		Flexible Coupling	533882
	2008.01-2018.07		Front	SUV 4WD CAWA/CCTB/CCZC		Flexible Coupling Kit	537626S
	2008.01-2018.07		Rear	SUV 4WD CAWA/CCTB/CCZC		Flexible Coupling Kit	533882S
	2008.02-2018.07	MT	Rear	SUV 4WD CBBB/CFGB	Date from:2008.02,Model:5N1;Date from:2008.02,For PR code:5C0/5C6,Model:5N2	Propshaft	PS900520
	2008.02-2018.07		Centre	SUV 4WD CBBB/CFGB		Center Bearing Support	538658
	2008.02-2018.07		Centre	SUV 4WD CBBB/CFGB	Model year from:2008,Model year to:2011	Center Bearing Support Kit	538695S
	2008.02-2018.07		Rear	SUV 4WD CBBB/CFGB		Flexible Coupling	533882
	2008.02-2018.07		Front	SUV 4WD CBBB/CFGB		Flexible Coupling Kit	537626S
	2008.02-2018.07		Rear	SUV 4WD CBBB/CFGB		Flexible Coupling Kit	533882S
	2009.11-2011.05		Rear	SUV Van 4WD CCZC		Flexible Coupling	533882
	2009.11-2011.05		Rear	SUV Van 4WD CCZC		Flexible Coupling Kit	533882S
	2010.05-2013.05		Rear	SUV Van 4WD CFGB		Flexible Coupling	533882
	2010.05-2013.05		Rear	SUV Van 4WD CFGB		Flexible Coupling Kit	533882S
2.0 (130 kw)	2012.11-2018.07	MT	Rear	SUV 4WD CFGC	For PR code:5C0/5C6	Propshaft	PS900520
	2012.11-2018.07		Centre	SUV 4WD CFGC		Center Bearing Support	538658
	2012.11-2018.07		Centre	SUV 4WD CFGC		Center Bearing Support Kit	538695S
	2012.11-2018.07		Rear	SUV 4WD CFGC		Flexible Coupling	533882
	2012.11-2018.07		Rear	SUV Van 4WD CFGC		Flexible Coupling	533882
	2012.11-2018.07		Front	SUV 4WD CFGC		Flexible Coupling Kit	537626S
	2012.11-2018.07		Rear	SUV 4WD CFGC		Flexible Coupling Kit	533882S
	2012.11-2018.07		Rear	SUV Van 4WD CFGC		Flexible Coupling Kit	533882S
	2016.08-2020.07		Front	SUV 4WD CRGB		Flexible Coupling	537626
	2016.08-2020.07		Rear	SUV 4WD CRGB		Flexible Coupling	533882
	2016.08-2020.07		Front	SUV 4WD CRGB		Flexible Coupling Kit	537626S
	2016.08-2020.07		Rear	SUV 4WD CRGB		Flexible Coupling Kit	533882S
2.0 (132 kw)	2011.05-2018.07	MT	Rear	SUV 4WD CCZD	For PR code:5C0/5C6	Propshaft	PS900520
	2011.05-2018.07		Centre	SUV 4WD CCZD		Center Bearing Support	538658
	2011.05-2018.07		Centre	SUV 4WD CCZD	Model year from:2012	Center Bearing Support Kit	538695S
	2011.05-2018.07		Rear	SUV 4WD CCZD		Flexible Coupling	533882
	2011.05-2018.07		Front	SUV 4WD CCZD		Flexible Coupling Kit	537626S
	2011.05-2018.07		Rear	SUV 4WD CCZD		Flexible Coupling Kit	533882S
	2016.01-		Front	SUV 4WD CZPA		Flexible Coupling	537626
	2016.01-		Rear	SUV 4WD CZPA		Flexible Coupling	533882
	2016.01-		Front	SUV 4WD CZPA		Flexible Coupling Kit	537626S
	2016.01-		Rear	SUV 4WD CZPA		Flexible Coupling Kit	533882S
2.0 (135 kw)	2015.05-2018.07	MT	Rear	SUV 4WD CUWA	Date to:2015.08,For PR code:5C0;Date from:2015.08,For PR code:G1D+5C0	Propshaft	PS900520
	2015.05-2018.07		Centre	SUV 4WD CUWA		Center Bearing Support Kit	538695S
	2015.05-2018.07		Rear	SUV 4WD CUWA		Flexible Coupling	533882

	YEAR	TRANSM.	FITTING POSITION	BODY STYLE & DRIVE TYPE & ENGINE	REMARKS	PRODUCT	GSP Ref.
VW **Tiguan**							
2.0 (135 kw)	2015.05-2018.07		Front	SUV 4WD CUWA		Flexible Coupling Kit	537626S
	2015.05-2018.07		Rear	SUV 4WD CUWA		Flexible Coupling Kit	533882S
2.0 (140 kw)	2016.01-2020.07		Front	SUV 4WD DFHA		Flexible Coupling	537626
	2016.01-2020.07		Rear	SUV 4WD DFHA		Flexible Coupling	533882
	2016.01-2020.07		Front	SUV 4WD DFHA		Flexible Coupling Kit	537626S
	2016.01-2020.07		Rear	SUV 4WD DFHA		Flexible Coupling Kit	533882S
	2018.09-		Front	SUV 4WD DKZA/DNNA		Flexible Coupling	537626
	2018.09-		Rear	SUV 4WD DKZA/DNNA		Flexible Coupling	533882
	2018.09-		Front	SUV 4WD DKZA/DNNA		Flexible Coupling Kit	537626S
	2018.09-		Rear	SUV 4WD DKZA/DNNA		Flexible Coupling Kit	533882S
2.0 (147 kw)	2007.11-2018.07	MT	Rear	SUV 4WD CAWB/CCTA/CCZA	Model:5N1;For PR code:5C0/5C6,Model:5N2	Propshaft	PS900520
	2007.11-2018.07		Centre	SUV 4WD CAWB/CCTA/CCZA		Center Bearing Support	538658
	2007.11-2018.07		Centre	SUV 4WD CAWB/CCTA/CCZA		Center Bearing Support Kit	538695S
	2007.11-2018.07		Rear	SUV 4WD CAWB/CCTA/CCZA		Flexible Coupling	533882
	2007.11-2018.07		Front	SUV 4WD CAWB/CCTA/CCZA		Flexible Coupling Kit	537626S
	2007.11-2018.07		Rear	SUV 4WD CAWB/CCTA/CCZA		Flexible Coupling Kit	533882S
	2009.11-2011.05		Centre	SUV Van 4WD CCZA		Center Bearing Support Kit	538695S
	2009.11-2011.05		Rear	SUV Van 4WD CCZA		Flexible Coupling	533882
	2009.11-2011.05		Rear	SUV Van 4WD CCZA		Flexible Coupling Kit	533882S
	2020.06-		Front	SUV 4WD DTUA		Flexible Coupling	537626
	2020.06-		Rear	SUV 4WD DTUA		Flexible Coupling	533882
	2020.06-		Front	SUV 4WD DTUA		Flexible Coupling Kit	537626S
	2020.06-		Rear	SUV 4WD DTUA		Flexible Coupling Kit	533882S
2.0 (155 kw)	2011.05-2018.07	MT	Rear	SUV 4WD CCZB	For PR code:5C0/5C6	Propshaft	PS900520
	2011.05-2018.07		Centre	SUV 4WD CCZB		Center Bearing Support	538658
	2011.05-2018.07		Centre	SUV 4WD CCZB	Model year from:2012	Center Bearing Support Kit	538695S
	2011.05-2018.07		Centre	SUV Van 4WD CCZB		Center Bearing Support Kit	538695S
	2011.05-2018.07		Rear	SUV 4WD CCZB		Flexible Coupling	533882
	2011.05-2018.07		Rear	SUV Van 4WD CCZB		Flexible Coupling	533882
	2011.05-2018.07		Front	SUV 4WD CCZB		Flexible Coupling Kit	537626S
	2011.05-2018.07		Rear	SUV 4WD CCZB		Flexible Coupling Kit	533882S
	2011.05-2018.07		Rear	SUV Van 4WD CCZB		Flexible Coupling Kit	533882S
2.0 (162 kw)	2016.05-		Front	SUV 4WD CHHB		Flexible Coupling	537626
	2016.05-		Rear	SUV 4WD CHHB		Flexible Coupling	533882
	2016.05-		Front	SUV 4WD CHHB		Flexible Coupling Kit	537626S
	2016.05-		Rear	SUV 4WD CHHB		Flexible Coupling Kit	533882S
2.0 (169 kw)	2018.09-2020.07		Front	SUV 4WD DKTA		Flexible Coupling	537626
	2018.09-2020.07		Rear	SUV 4WD DKTA		Flexible Coupling	533882
	2018.09-2020.07		Front	SUV 4WD DKTA		Flexible Coupling Kit	537626S
	2018.09-2020.07		Rear	SUV 4WD DKTA		Flexible Coupling Kit	533882S
2.0 (176 kw)	2016.05-2020.07		Front	SUV 4WD CUAA		Flexible Coupling	537626
	2016.05-2020.07		Rear	SUV 4WD CUAA		Flexible Coupling	533882
	2016.05-2020.07		Front	SUV 4WD CUAA		Flexible Coupling Kit	537626S
	2016.05-2020.07		Rear	SUV 4WD CUAA		Flexible Coupling Kit	533882S
2.0 (235 kw)	2020.11-		Front	SUV 4WD DNFG		Flexible Coupling	537626
	2020.11-		Rear	SUV 4WD DNFG		Flexible Coupling	533882
	2020.11-		Front	SUV 4WD DNFG		Flexible Coupling Kit	537626S
	2020.11-		Rear	SUV 4WD DNFG		Flexible Coupling Kit	533882S
Tiguan Allspace							
2.0 (110 kw)	2017.06-		Front	SUV 4WD DBGC/DFGA/DTSA/DTSB		Flexible Coupling	537626
	2017.06-		Rear	SUV 4WD DBGC/DFGA/DTSA/DTSB		Flexible Coupling	533882
	2017.06-		Front	SUV 4WD DBGC/DFGA/DTSA/DTSB		Flexible Coupling Kit	537626S
	2017.06-		Rear	SUV 4WD DBGC/DFGA/DTSA/DTSB		Flexible Coupling Kit	533882S
2.0 (132 kw)	2017.03-2021.07		Front	SUV 4WD DGVA		Flexible Coupling	537626
	2017.03-2021.07		Rear	SUV 4WD DGVA		Flexible Coupling	533882
	2017.03-2021.07		Front	SUV 4WD DGVA		Flexible Coupling Kit	537626S
	2017.03-2021.07		Rear	SUV 4WD DGVA		Flexible Coupling Kit	533882S
2.0 (140 kw)	2017.06-2021.07		Front	SUV 4WD DFHA		Flexible Coupling	537626
	2017.06-2021.07		Rear	SUV 4WD DFHA		Flexible Coupling	533882
	2017.06-2021.07		Front	SUV 4WD DFHA		Flexible Coupling Kit	537626S
	2017.06-2021.07		Rear	SUV 4WD DFHA		Flexible Coupling Kit	533882S
	2018.09-		Rear	SUV 4WD DNLA/DNNA		Flexible Coupling Kit	533882S
2.0 (147 kw)	2020.06-		Rear	SUV 4WD DTUA		Flexible Coupling Kit	533882S

	YEAR	TRANSM.	FITTING POSITION	BODY STYLE & DRIVE TYPE & ENGINE	REMARKS	PRODUCT	GSP Ref.
VW							
Tiguan Allspace							
2.0 (162 kw)	2017.06-		Front	SUV 4WD CXDA/DNJA		Flexible Coupling	537626
	2017.06-		Rear	SUV 4WD CXDA/DNJA		Flexible Coupling	533882
	2017.06-		Front	SUV 4WD CXDA/DNJA		Flexible Coupling Kit	537626S
	2017.06-		Rear	SUV 4WD CXDA/DNJA		Flexible Coupling Kit	533882S
2.0 (176 kw)	2017.06-2020.09		Front	SUV 4WD CUAA		Flexible Coupling	537626
	2017.06-2020.09		Rear	SUV 4WD CUAA		Flexible Coupling	533882
	2017.06-2020.09		Front	SUV 4WD CUAA		Flexible Coupling Kit	537626S
	2017.06-2020.09		Rear	SUV 4WD CUAA		Flexible Coupling Kit	533882S
2.0 (180 kw)	2020.09-		Rear	SUV 4WD DNPA		Flexible Coupling Kit	533882S
Touareg							
2.0 (185 kw)	2018.09-2023.11	AT	Rear	SUV 4WD CYRB		Propshaft	PS901643
2.5 (120 kw)	2003.07-2010.05		Centre	SUV 4WD BLK/BPD		Center Bearing Support	538617
	2003.07-2010.05		Centre	SUV 4WD BLK/BPD		Center Bearing Support Kit	538694S
	2003.07-2010.05		Rear	SUV 4WD BLK/BPD		Flexible Coupling	517957
	2003.07-2010.05		Rear	SUV 4WD BLK/BPD		Flexible Coupling Kit	517957S
2.5 (128 kw)	2003.01-2010.05		Centre	SUV 4WD BAC/BPE		Center Bearing Support	538617
	2003.01-2010.05		Centre	SUV 4WD BAC/BPE		Center Bearing Support Kit	538694S
	2003.01-2010.05		Rear	SUV 4WD BAC/BPE		Flexible Coupling	517957
	2003.01-2010.05		Rear	SUV 4WD BAC/BPE		Flexible Coupling Kit	517957S
3.0 (150 kw)	2010.01-2018.03		Centre	SUV 4WD CASD/CJMA/CRCD/CVWA		Center Bearing Support	538615
	2010.01-2018.03		Centre	SUV 4WD CASD/CJMA/CRCD/CVWA		Center Bearing Support Kit	539946S
3.0 (155 kw)	2006.12-2010.05	AT	Front	SUV 4WD BUN/CASB	Model year from:2009,Model year to:2010	Propshaft	PS900525
	2006.12-2010.05	AT	Rear	SUV 4WD BUN/CASB	Model year from:2009,Model year to:2010	Propshaft	PS900527
	2006.12-2010.05		Front	SUV 4WD BUN/CASB	Date from:2006.12	Joint,propshaft	661094
	2006.12-2010.05		Centre	SUV 4WD BUN/CASB		Center Bearing Support	538617
	2006.12-2010.05		Centre	SUV 4WD BUN/CASB		Center Bearing Support Kit	538694S
	2006.12-2010.05		Rear	SUV 4WD BUN/CASB		Flexible Coupling	517957
	2006.12-2010.05		Rear	SUV 4WD BUN/CASB		Flexible Coupling Kit	517957S
3.0 (165 kw)	2004.11-2010.05	MT	Front	SUV 4WD BKS/CATA	Model year from:2009,Model year to:2010	Propshaft	PS900525
	2004.11-2010.05	MT	Rear	SUV 4WD BKS/CATA	Model year from:2009,Model year to:2010	Propshaft	PS900527
	2004.11-2010.05		Front	SUV 4WD BKS/CATA		Joint,propshaft	661094
	2004.11-2010.05		Centre	SUV 4WD BKS/CATA		Center Bearing Support	538617
	2004.11-2010.05		Centre	SUV 4WD BKS/CATA		Center Bearing Support Kit	538694S
	2004.11-2010.05		Rear	SUV 4WD BKS/CATA		Flexible Coupling	517957
	2004.11-2010.05		Rear	SUV 4WD BKS/CATA		Flexible Coupling Kit	517957S
	2010.06-2012.05		Centre	SUV 4WD CATA		Center Bearing Support	538615
	2010.06-2012.05		Centre	SUV 4WD CATA		Center Bearing Support Kit	539946S
3.0 (176 kw)	2007.11-2010.05	MT	Front	SUV 4WD CASA/CASC	Model year from:2009,Model year to:2010	Propshaft	PS900525
	2007.11-2010.05	MT	Rear	SUV 4WD CASA/CASC	Model year from:2009,Model year to:2010	Propshaft	PS900527
	2007.11-2010.05		Front	SUV 4WD CASA/CASC		Joint,propshaft	661094
	2007.11-2010.05		Centre	SUV 4WD CASA/CASC		Center Bearing Support	538617
	2007.11-2010.05		Centre	SUV 4WD CASA/CASC		Center Bearing Support Kit	538694S
	2007.11-2010.05		Rear	SUV 4WD CASA/CASC		Flexible Coupling	517957
	2007.11-2010.05		Rear	SUV 4WD CASA/CASC		Flexible Coupling Kit	517957S
	2010.01-2014.12	AT	Rear	SUV 4WD CASA/CNRB		Propshaft	PS901657
	2010.01-2014.12		Centre	SUV 4WD CASA/CNRB		Center Bearing Support	538615
	2010.01-2014.12		Centre	SUV 4WD CASA/CNRB		Center Bearing Support Kit	539946S
3.0 (180 kw)	2011.05-2014.12		Centre	SUV Van 4WD CRCA		Center Bearing Support Kit	539946S
	2011.05-2018.03	AT	Rear	SUV 4WD CJGD/CRCA		Propshaft	PS901657
	2011.05-2018.03		Centre	SUV 4WD CJGD/CRCA		Center Bearing Support	538615
	2011.05-2018.03		Centre	SUV 4WD CJGD/CRCA		Center Bearing Support Kit	539946S
3.0 (193 kw)	2014.08-2018.03	AT	Rear	SUV 4WD CVVA		Propshaft	PS901657
	2014.08-2018.03		Centre	SUV 4WD CVVA		Center Bearing Support Kit	539946S
3.0 (213 kw)	2010.08-2014.12		Centre	SUV 4WD CJTA		Center Bearing Support	538615
	2010.08-2014.12		Centre	SUV 4WD CJTA		Center Bearing Support Kit	539946S
3.0 (235 kw)	2015.01-2018.03		Centre	SUV 4WD CYJA		Center Bearing Support Kit	539946S
3.0 (279 kw)	2010.04-2018.03	AT	Front	SUV 4WD CGEA/CGFA	Model year from:2011,Model year to:2015	Propshaft	PS900522
	2010.04-2018.03	AT	Rear	SUV 4WD CGEA/CGFA	Model year from:2011,Model year to:2015	Propshaft	PS900523
	2010.04-2018.03		Centre	SUV 4WD CGEA/CGFA		Center Bearing Support	538615
	2010.04-2018.03		Centre	SUV 4WD CGEA/CGFA		Center Bearing Support Kit	539946S
3.2 (162 kw)	2002.11-2006.11	AT	Front	SUV 4WD AZZ/BAA/BKJ/BMV/BMX/BRJ	Model year from:2004	Propshaft	PS900525
	2002.11-2006.11	AT	Rear	SUV 4WD AZZ/BAA/BKJ/BMV/BMX/BRJ	Model year from:2004	Propshaft	PS900527
	2002.11-2006.11		Front	SUV 4WD AZZ/BAA/BKJ/BMV/BMX/BRJ		Joint,propshaft	661094
	2002.11-2006.11		Centre	SUV 4WD AZZ/BAA/BKJ/BMV/BMX/BRJ		Center Bearing Support	538617

	YEAR	TRANSM.	FITTING POSITION	BODY STYLE & DRIVE TYPE & ENGINE	REMARKS	PRODUCT	GSP Ref.
VW							
Touareg							
3.2 (162 kw)	2002.11-2006.11		Centre	SUV 4WD AZZ/BAA/BKJ/BMV/BMX/BRJ		Center Bearing Support Kit	538694S
	2002.11-2006.11		Rear	SUV 4WD AZZ/BAA/BKJ/BMV/BMX/BRJ		Flexible Coupling	517957
	2002.11-2006.11		Rear	SUV 4WD AZZ/BAA/BKJ/BMV/BMX/BRJ		Flexible Coupling Kit	517957S
3.2 (177 kw)	2004.11-2006.11	AT	Front	SUV 4WD BKJ/BMV/BMX/BRJ		Propshaft	PS900525
	2004.11-2006.11	AT	Rear	SUV 4WD BKJ/BMV/BMX/BRJ		Propshaft	PS900527
	2004.11-2006.11		Front	SUV 4WD BKJ/BMV/BMX/BRJ		Joint,propshaft	661094
	2004.11-2006.11		Centre	SUV 4WD BKJ/BMV/BMX/BRJ		Center Bearing Support	538617
	2004.11-2006.11		Centre	SUV 4WD BKJ/BMV/BMX/BRJ		Center Bearing Support Kit	538694S
	2004.11-2006.11		Rear	SUV 4WD BKJ/BMV/BMX/BRJ		Flexible Coupling	517957
	2004.11-2006.11		Rear	SUV 4WD BKJ/BMV/BMX/BRJ		Flexible Coupling Kit	517957S
3.6 (183 kw)	2010.08-2018.03	AT	Front	SUV 4WD CMTA	Model year from:2011,Model year to:2017	Propshaft	PS900522
	2010.08-2018.03		Centre	SUV 4WD CMTA		Center Bearing Support	538615
	2010.08-2018.03		Centre	SUV 4WD CMTA		Center Bearing Support Kit	539946S
3.6 (206 kw)	2005.10-2010.12	AT	Front	SUV 4WD BHK/BHL	Model year from:2007	Propshaft	PS900525
	2005.10-2010.12	AT	Rear	SUV 4WD BHK/BHL	Model year from:2007	Propshaft	PS900527
	2005.10-2010.12		Front	SUV 4WD BHK/BHL		Joint,propshaft	661094
	2005.10-2010.12		Centre	SUV 4WD BHK/BHL		Center Bearing Support	538617
	2005.10-2010.12		Centre	SUV 4WD BHK/BHL	Engine Code:BHK	Center Bearing Support Kit	538694S
	2005.10-2010.12		Rear	SUV 4WD BHK/BHL		Flexible Coupling	517957
	2005.10-2010.12		Rear	SUV 4WD BHK/BHL		Flexible Coupling Kit	517957S
	2010.04-2018.03	AT	Front	SUV 4WD CGRA	Model year from:2011,Model year to:2017	Propshaft	PS900522
	2010.04-2018.03		Centre	SUV 4WD CGRA		Center Bearing Support	538615
	2010.04-2018.03		Centre	SUV 4WD CGRA		Center Bearing Support Kit	539946S
4.2 (228 kw)	2002.12-2006.11	AT	Front	SUV 4WD AXQ	Model year from:2004	Propshaft	PS900525
	2002.12-2006.11		Front	SUV 4WD AXQ		Joint,propshaft	661094
	2002.12-2006.11		Centre	SUV 4WD AXQ		Center Bearing Support	538617
	2002.12-2006.11		Centre	SUV 4WD AXQ		Center Bearing Support Kit	538694S
	2002.12-2006.11		Rear	SUV 4WD AXQ		Flexible Coupling	517957
	2002.12-2006.11		Rear	SUV 4WD AXQ		Flexible Coupling Kit	517957S
4.2 (250 kw)	2010.01-2018.03		Centre	SUV 4WD CKDA		Center Bearing Support	538615
	2010.01-2018.03		Centre	SUV 4WD CKDA		Center Bearing Support Kit	539946S
4.2 (257 kw)	2006.06-2010.05	AT	Front	SUV 4WD BAR	Model year to:2009	Propshaft	PS900525
	2006.06-2010.05		Front	SUV 4WD BAR		Joint,propshaft	661094
	2006.06-2010.05		Centre	SUV 4WD BAR		Center Bearing Support	538617
	2006.06-2010.05		Centre	SUV 4WD BAR		Center Bearing Support Kit	538694S
	2006.06-2010.05		Rear	SUV 4WD BAR		Flexible Coupling	517957
	2006.06-2010.05		Rear	SUV 4WD BAR		Flexible Coupling Kit	517957S
4.2 (265 kw)	2011.01-2018.03		Centre	SUV 4WD CGNA		Center Bearing Support	538615
	2011.01-2018.03		Centre	SUV 4WD CGNA		Center Bearing Support Kit	539946S
5.0 (230 kw)	2002.11-2010.05	AT	Front	SUV 4WD AYH/BLE/BWF	Model year from:2006,Model year to:2008	Propshaft	PS900526
	2002.11-2010.05	AT	Rear	SUV 4WD AYH/BLE/BWF	Model year from:2006,Model year to:2008	Propshaft	PS900528
	2002.11-2010.05	AT	-	SUV 4WD AYH/BLE/BWF	Model year from:2006,Model year to:2008	Joint,propshaft	605158
	2002.11-2010.05		Centre	SUV 4WD AYH/BLE/BWF		Center Bearing Support	538617
	2002.11-2010.05		Centre	SUV 4WD AYH/BLE/BWF	Engine Code:BLE,AYH	Center Bearing Support Kit	538694S
	2002.11-2010.05		Rear	SUV 4WD AYH/BLE/BWF		Flexible Coupling	517957
	2002.11-2010.05		Rear	SUV 4WD AYH/BLE/BWF		Flexible Coupling Kit	517957S
5.0 (258 kw)	2007.08-2010.05	AT	Front	SUV 4WD CBWA	Model year to:2008	Propshaft	PS900526
	2007.08-2010.05	AT	Rear	SUV 4WD CBWA	Model year to:2008	Propshaft	PS900528
	2007.08-2010.05	AT	-	SUV 4WD CBWA	Model year to:2008	Joint,propshaft	605158
	2007.08-2010.05		Centre	SUV 4WD CBWA		Center Bearing Support	538617
	2007.08-2010.05		Centre	SUV 4WD CBWA		Center Bearing Support Kit	538694S
	2007.08-2010.05		Rear	SUV 4WD CBWA		Flexible Coupling	517957
	2007.08-2010.05		Rear	SUV 4WD CBWA		Flexible Coupling Kit	517957S
6.0 (331 kw)	2004.08-2010.05		Front	SUV 4WD BJN/CFRA		Joint,propshaft	661094
	2004.08-2010.05		Centre	SUV 4WD BJN/CFRA		Center Bearing Support	538617
	2004.08-2010.05		Centre	SUV 4WD BJN/CFRA		Center Bearing Support Kit	538694S
	2004.08-2010.05		Rear	SUV 4WD BJN/CFRA		Flexible Coupling	517957
	2004.08-2010.05		Rear	SUV 4WD BJN/CFRA		Flexible Coupling Kit	517957S
Transporter							
1.9 (50 kw)	1992.10-2003.04		Centre	Van FWD ABL		Center Bearing Support	538652
	1992.10-2003.04		Centre	Platform/Chassis FWD ABL		Center Bearing Support	538652
1.9 (62 kw)	2006.01-2009.11		Centre	Van FWD BRR		Center Bearing Support	538670
	2006.01-2009.11		Centre	Chassis Cabin FWD BRR		Center Bearing Support	538670

	YEAR	TRANSM.	FITTING POSITION	BODY STYLE & DRIVE TYPE & ENGINE	REMARKS	PRODUCT	GSP Ref.
VW Transporter							
1.9 (63 kw)	2003.04-2009.11		Centre	Chassis Cabin FWD AXC		Center Bearing Support	538670
	2003.04-2009.11		Centre	Van FWD AXC		Center Bearing Support	538670
1.9 (75 kw)	2006.01-2009.11		Centre	Chassis Cabin FWD BRS		Center Bearing Support	538670
	2006.01-2009.11		Centre	Van FWD BRS		Center Bearing Support	538670
1.9 (77 kw)	2003.04-2009.11		Centre	Chassis Cabin FWD AXB		Center Bearing Support	538670
	2003.04-2009.11		Centre	Van FWD AXB		Center Bearing Support	538670
2.0 (62 kw)	1990.07-2003.04		Centre	Platform/Chassis FWD AAC		Center Bearing Support	538652
	1990.07-2003.04		Centre	Van FWD AAC		Center Bearing Support	538652
	2009.08-2015.08		Centre	Chassis Cabin FWD CAAA		Center Bearing Support	538670
	2009.09-2015.08		Centre	Van FWD CAAA		Center Bearing Support	538670
	2009.09-2015.08		Centre	Bus FWD CAAA		Center Bearing Support	538670
2.0 (75 kw)	2009.09-2015.08		Centre	Van FWD CAAB		Center Bearing Support	538670
	2009.09-2015.08		Centre	Chassis Cabin FWD CAAB		Center Bearing Support	538670
	2011.04-2015.08		Centre	Bus FWD CAAB		Center Bearing Support	538670
	2015.04-2019.12		Front	Bus FWD CAAB/CXGB		Center Bearing Support Kit	539920S
2.0 (84 kw)	2011.05-2015.08		Centre	Bus FWD CAAD		Center Bearing Support	538670
	2011.05-2015.08		Centre	Chassis Cabin FWD CAAD		Center Bearing Support	538670
	2011.05-2015.08		Centre	Van FWD CAAD		Center Bearing Support	538670
2.0 (85 kw)	2003.11-2011.05		Centre	Chassis Cabin FWD AXACNG		Center Bearing Support	538670
	2003.11-2015.08		Centre	Van FWD AXA		Center Bearing Support	538670
	2003.11-2015.08		Centre	Chassis Cabin FWD AXA		Center Bearing Support	538670
	2009.09-2013.05		Centre	Bus FWD AXA		Center Bearing Support	538670
	2009.09-2015.08		Centre	Bus FWD AXACNG		Center Bearing Support	538670
2.0 (100 kw)	2010.05-2015.08	MT	Front	Bus 4WD CAAE/CCHB	Date to:2014.02;Date from:2014.03,Wheelbase:3000 mm	Propshaft	PS901375
	2010.05-2015.08	MT	Front	Chassis Cabin 4WD CAAE/CCHB	Date to:2014.02;Date from:2014.03,Wheelbase:3000 mm	Propshaft	PS901375
	2010.05-2015.08	MT	Front	Van 4WD CAAE/CCHB	Date to:2014.02;Date from:2014.03,Wheelbase:3000 mm	Propshaft	PS901375
	2010.05-2015.08	MT	Front	Bus 4WD CAAE/CCHB	Date from:2014.03,Wheelbase:3400 mm	Propshaft	PS901642
	2010.05-2015.08	MT	Front	Chassis Cabin 4WD CAAE/CCHB	Date from:2014.03,Wheelbase:3400 mm	Propshaft	PS901642
	2010.05-2015.08	MT	Front	Van 4WD CAAE/CCHB	Date from:2014.03,Wheelbase:3400 mm	Propshaft	PS901642
	2010.05-2015.08		Rear	Chassis Cabin 4WD CAAE/CCHB	Date from:2014.02,For PR code:0E2;Wheelbase:3400 mm	Propshaft	PS901373
	2010.05-2015.08	6MT	Rear	Bus 4WD CAAE/CCHB	Date from:2011.04;Wheelbase:3000 mm	Propshaft	PS901350
	2010.05-2015.08	6MT	Rear	Chassis Cabin 4WD CAAE/CCHB	Date from:2011.04;Wheelbase:3000 mm	Propshaft	PS901350
	2010.05-2015.08	6MT	Rear	Van 4WD CAAE/CCHB	Date from:2011.04;Wheelbase:3000 mm	Propshaft	PS901350
	2010.05-2015.08	6MT	Rear	Bus 4WD CAAE/CCHB	Date from:2014.02,For PR code:0E2;Wheelbase:3400 mm	Propshaft	PS901373
	2010.05-2015.08	6MT	Rear	Van 4WD CAAE/CCHB	Date from:2014.02,For PR code:0E2;Wheelbase:3400 mm	Propshaft	PS901373
	2010.05-2015.08	AT	Rear	Chassis Cabin 4WD CAAE/CCHB	Wheelbase:3400 mm,Date from:2011.03,Date to:2014.02,for PR code:0E2	Propshaft	PS901824
	2010.05-2015.08	MT	Rear	Bus 4WD CAAE/CCHB	Model:Transporter;Wheelbase:3400 mm,Date from:2011.03,Date to:2014.02,for PR code:0E2	Propshaft	PS901824
	2010.05-2015.08	MT	Rear	Van 4WD CAAE/CCHB	Wheelbase:3400 mm,Date from:2011.03,Date to:2014.02,for PR code:0E2	Propshaft	PS901824
	2010.05-2015.08	6MT	Front	Bus 4WD CAAE/CCHB	Model:Transporter,Date from:2011.04;Wheelbase:3000 mm	Joint,propshaft	605147
	2010.05-2015.08	6MT	Front	Chassis Cabin 4WD CAAE/CCHB	Date from:2011.04;Wheelbase:3000 mm	Joint,propshaft	605147
	2010.05-2015.08	6MT	Front	Van 4WD CAAE/CCHB	Date from:2011.04;Wheelbase:3000 mm	Joint,propshaft	605147
	2010.05-2015.08	6MT	Rear	Bus 4WD CAAE/CCHB	Model:Transporter,Date from:2011.04;Wheelbase:3000 mm	Joint,propshaft	602051
	2010.05-2015.08	6MT	Rear	Chassis Cabin 4WD CAAE/CCHB	Date from:2011.04;Wheelbase:3000 mm	Joint,propshaft	602051
	2010.05-2015.08	6MT	Rear	Van 4WD CAAE/CCHB	Date from:2011.04;Wheelbase:3000 mm	Joint,propshaft	602051
	2010.05-2015.08		Centre	Bus FWD CAAE/CCHB		Center Bearing Support	538670
	2010.05-2015.08		Centre	Bus 4WD CAAE/CCHB		Center Bearing Support	538670
	2010.05-2015.08		Centre	Chassis Cabin 4WD CAAE/CCHB		Center Bearing Support	538670
	2010.05-2015.08		Centre	Chassis Cabin FWD CAAE		Center Bearing Support	538670
	2010.05-2015.08		Centre	Van 4WD CAAE/CCHB		Center Bearing Support	538670
	2010.05-2015.08		Centre	Van FWD CAAE/CCHB		Center Bearing Support	538670
	2010.05-2015.08		Front	Bus 4WD CAAE/CCHB		Center Bearing Support Kit	539920S
	2010.05-2015.08		Front	Chassis Cabin 4WD CAAE/CCHB		Center Bearing Support Kit	539920S
	2010.05-2015.08		Front	Van 4WD CAAE/CCHB		Center Bearing Support Kit	539920S
2.0 (103 kw)	2009.09-2015.08	MT	Front	Van 4WD CAAC/CCHA	Date to:2014.02;Date from:2014.03,Wheelbase:3000 mm	Propshaft	PS901375
	2009.09-2015.08	MT	Front	Chassis Cabin 4WD CAAC/CCHA	Date to:2014.02;Date from:2014.03,Wheelbase:3000 mm	Propshaft	PS901375
	2009.09-2015.08	MT	Front	Van 4WD CAAC/CCHA	Date from:2014.03,Wheelbase:3400 mm	Propshaft	PS901642
	2009.09-2015.08	MT	Front	Chassis Cabin 4WD CAAC/CCHA	Date from:2014.03,Wheelbase:3400 mm	Propshaft	PS901642
	2009.09-2015.08	6MT	Rear	Van 4WD CAAC/CCHA	Date from:2011.04;Wheelbase:3000 mm	Propshaft	PS901350
	2009.09-2015.08	6MT	Rear	Chassis Cabin 4WD CAAC/CCHA	Date from:2011.04;Wheelbase:3000 mm	Propshaft	PS901350
	2009.09-2015.08	6MT	Rear	Van 4WD CAAC/CCHA	Date from:2014.02,For PR code:0E2;Wheelbase:3400 mm	Propshaft	PS901373
	2009.09-2015.08	6MT	Rear	Chassis Cabin 4WD CAAC/CCHA	Date from:2014.02,For PR code:0E2;Wheelbase:3400 mm	Propshaft	PS901373
	2009.09-2015.08	MT	Rear	Van 4WD CAAC/CCHA	Wheelbase:3400 mm,Date from:2011.03,Date to:2014.02,for PR code:0E2	Propshaft	PS901824
	2009.09-2015.08	MT	Rear	Chassis Cabin 4WD CAAC/CCHA	Wheelbase:3400 mm,Date from:2011.03,Date to:2014.02,for PR code:0E2	Propshaft	PS901824
	2009.09-2015.08	6MT	Front	Van 4WD CAAC/CCHA	Date from:2011.04;Wheelbase:3000 mm	Joint,propshaft	605147

	YEAR	TRANSM.	FITTING POSITION	BODY STYLE & DRIVE TYPE & ENGINE	REMARKS	PRODUCT	GSP Ref.
VW Transporter							
2.0 (103 kw)	2009.09-2015.08	6MT	Front	Chassis Cabin 4WD CAAC/CCHA	Date from:2011.04;Wheelbase:3000 mm	Joint,propshaft	605147
	2009.09-2015.08	6MT	Rear	Van 4WD CAAC/CCHA	Date from:2011.04;Wheelbase:3000 mm	Joint,propshaft	602051
	2009.09-2015.08	6MT	Rear	Chassis Cabin 4WD CAAC/CCHA	Date from:2011.04;Wheelbase:3000 mm	Joint,propshaft	602051
	2009.09-2015.08		Centre	Bus FWD CAAC/CCHA		Center Bearing Support	538670
	2009.09-2015.08		Centre	Van 4WD CAAC/CCHA		Center Bearing Support	538670
	2009.09-2015.08		Centre	Van FWD CAAC/CCHA		Center Bearing Support	538670
	2009.09-2015.08		Centre	Chassis Cabin 4WD CAAC/CCHA		Center Bearing Support	538670
	2009.09-2015.08		Centre	Chassis Cabin FWD CAAC/CCHA		Center Bearing Support	538670
	2009.09-2015.08		Front	Van 4WD CAAC/CCHA		Center Bearing Support Kit	539920S
	2009.09-2015.08		Front	Chassis Cabin 4WD CAAC/CCHA		Center Bearing Support Kit	539920S
	2009.10-2015.08	MT	Front	Bus 4WD CAAC/CCHA	Date to:2014.02;Date from:2014.03,Wheelbase:3000 mm	Propshaft	PS901375
	2009.10-2015.08	MT	Front	Bus 4WD CAAC/CCHA	Date from:2014.03,Wheelbase:3400 mm	Propshaft	PS901642
	2009.10-2015.08	6MT	Rear	Bus 4WD CAAC/CCHA	Date from:2011.04;Wheelbase:3000 mm	Propshaft	PS901350
	2009.10-2015.08	6MT	Rear	Bus 4WD CAAC/CCHA	Date from:2014.02,For PR code:0E2	Propshaft	PS901373
	2009.10-2015.08	MT	Rear	Bus 4WD CAAC/CCHA	Model:Transporter;Wheelbase:3400 mm,Date from:2011.03,Date to:2014.02,for PR code:0E2	Propshaft	PS901824
	2009.10-2015.08	6MT	Front	Bus 4WD CAAC/CCHA	Model:Transporter;Model:Transporter;Date from:2011.04;Wheelbase:3000 mm	Joint,propshaft	605147
	2009.10-2015.08	6MT	Rear	Bus 4WD CAAC/CCHA	Model:Transporter;Model:Transporter;Date from:2011.04;Wheelbase:3000 mm	Joint,propshaft	602051
	2009.10-2015.08		Centre	Bus 4WD CAAC/CCHA		Center Bearing Support	538670
	2009.10-2015.08		Front	Bus 4WD CAAC/CCHA		Center Bearing Support Kit	539920S
	2015.04-2019.12		Front	Bus FWD CAAC		Center Bearing Support Kit	539920S
	2015.06-2019.11	MT	Front	Chassis Cabin 4WD CAAC	Wheelbase:3000 mm	Propshaft	PS901375
	2015.06-2019.11	MT	Front	Chassis Cabin 4WD CAAC	Wheelbase:3400 mm	Propshaft	PS901642
	2015.06-2019.11	6MT	Rear	Chassis Cabin 4WD CAAC	For PR code:0E1;Wheelbase:3000 mm	Propshaft	PS901350
	2015.06-2019.11	6MT	Rear	Chassis Cabin 4WD CAAC	For PR code:0E2;Wheelbase:3400 mm	Propshaft	PS901373
	2015.06-2019.11	6MT	Front	Chassis Cabin 4WD CAAC	For PR code:0E1;Wheelbase:3000 mm	Joint,propshaft	605147
	2015.06-2019.11	6MT	Rear	Chassis Cabin 4WD CAAC	For PR code:0E1;Wheelbase:3000 mm	Joint,propshaft	602051
	2015.06-2019.11		Centre	Chassis Cabin 4WD CAAC		Center Bearing Support Kit	539928S
	2015.06-2019.12	MT	Front	Bus 4WD CAAC	Wheelbase:3000 mm	Propshaft	PS901375
	2015.06-2019.12	MT	Front	Van 4WD CAAC	Wheelbase:3000 mm	Propshaft	PS901375
	2015.06-2019.12	MT	Front	Bus 4WD CAAC	Wheelbase:3400 mm	Propshaft	PS901642
	2015.06-2019.12	MT	Front	Van 4WD CAAC	Wheelbase:3400 mm	Propshaft	PS901642
	2015.06-2019.12	6MT	Rear	Bus 4WD CAAC	For PR code:0E1;Wheelbase:3000 mm	Propshaft	PS901350
	2015.06-2019.12	6MT	Rear	Van 4WD CAAC	For PR code:0E1;Wheelbase:3000 mm	Propshaft	PS901350
	2015.06-2019.12	6MT	Rear	Bus 4WD CAAC	For PR code:0E2;Wheelbase:3400 mm	Propshaft	PS901373
	2015.06-2019.12	6MT	Rear	Van 4WD CAAC	For PR code:0E2;Wheelbase:3400 mm	Propshaft	PS901373
	2015.06-2019.12	6MT	Front	Bus 4WD CAAC	Model:Transporter,For PR code:0E1;Wheelbase:3000 mm	Joint,propshaft	605147
	2015.06-2019.12	6MT	Front	Van 4WD CAAC	For PR code:0E1;Wheelbase:3000 mm	Joint,propshaft	605147
	2015.06-2019.12	6MT	Rear	Bus 4WD CAAC	Model:Transporter,For PR code:0E1;Wheelbase:3000 mm	Joint,propshaft	602051
	2015.06-2019.12	6MT	Rear	Van 4WD CAAC	For PR code:0E1;Wheelbase:3000 mm	Joint,propshaft	602051
	2015.06-2019.12		Front	Van 4WD CAAC		Center Bearing Support Kit	539920S
	2015.06-2019.12		Centre	Bus 4WD CAAC		Center Bearing Support Kit	539928S
	2015.06-2019.12		Centre	Van 4WD CAAC		Center Bearing Support Kit	539928S
2.0 (110 kw)	2011.05-2015.08		Centre	Bus FWD CJKB		Center Bearing Support	538670
	2012.07-2015.08		Centre	Chassis Cabin FWD CJKB		Center Bearing Support	538670
	2012.07-2015.08		Centre	Van FWD CJKB		Center Bearing Support	538670
	2015.04-		Front	Bus FWD CXFA/CXHA/DNAA		Center Bearing Support Kit	539920S
	2015.08-	MT	Front	Van 4WD CXFA/CXHA/DNAA	Date to:2019.12,Wheelbase:3000 mm	Propshaft	PS901375
	2015.08-	MT	Front	Bus 4WD CXFA/CXHA	Date to:2019.12,Wheelbase:3000 mm	Propshaft	PS901375
	2015.08-	MT	Front	Van 4WD CXFA/CXHA/DNAA	Date to:2019.12,Wheelbase:3400 mm	Propshaft	PS901642
	2015.08-	MT	Front	Bus 4WD CXFA/CXHA	Date to:2019.12,Wheelbase:3400 mm	Propshaft	PS901642
	2015.08-		Rear	Van 4WD CXFA/CXHA/DNAA	Date to:2019.12,For PR code:0E1;Wheelbase:3000 mm	Propshaft	PS901350
	2015.08-		Rear	Van 4WD CXFA/CXHA/DNAA	Date to:2019.12,For PR code:0E2;Wheelbase:3400 mm	Propshaft	PS901373
	2015.08-	AT	Rear	Bus 4WD CXFA/CXHA	Date to:2019.12,For PR code:0E1;Wheelbase:3000 mm	Propshaft	PS901350
	2015.08-	AT	Rear	Bus 4WD CXFA/CXHA	Date to:2019.12,For PR code:0E2;Wheelbase:3400 mm	Propshaft	PS901373
	2015.08-		Front	Van 4WD CXFA/CXHA/DNAA	Date to:2019.12,For PR code:0E1;Wheelbase:3000 mm	Joint,propshaft	605147
	2015.08-	AT	Front	Bus 4WD CXFA/CXHA	Model:Transporter,Date to:2019.12,For PR code:0E1;Wheelbase:3000 mm	Joint,propshaft	605147
	2015.08-		Rear	Van 4WD CXFA/CXHA/DNAA	Date to:2019.12,For PR code:0E1;Wheelbase:3000 mm	Joint,propshaft	602051
	2015.08-	AT	Rear	Bus 4WD CXFA/CXHA	Model:Transporter,Date to:2019.12,For PR code:0E1;Wheelbase:3000 mm	Joint,propshaft	602051
	2015.08-		Front	Van 4WD CXFA/CXHA/DNAA		Center Bearing Support Kit	539920S
	2015.08-		Centre	Van 4WD CXFA/CXHA/DNAA		Center Bearing Support Kit	539928S
	2015.08-		Centre	Bus 4WD CXFA/CXHA		Center Bearing Support Kit	539928S
	2016.05-	AT/MT	Front	Chassis Cabin 4WD CXHA/DNAA	Date to:2019.12,Wheelbase:3000 mm	Propshaft	PS901375
	2016.05-	AT/MT	Front	Chassis Cabin 4WD CXHA/DNAA	Date to:2019.12,Wheelbase:3400 mm	Propshaft	PS901642
	2016.05-		Rear	Chassis Cabin 4WD CXHA/DNAA	Date to:2019.12,For PR code:0E1;Wheelbase:3000 mm	Propshaft	PS901350

	YEAR	TRANSM.	FITTING POSITION	BODY STYLE & DRIVE TYPE & ENGINE	REMARKS	PRODUCT	GSP Ref.
VW Transporter							
2.0 (110 kw)	2016.05-		Rear	Chassis Cabin 4WD CXHA/DNAA	Date to:2019.12,For PR code:0E2;Wheelbase:3400 mm	Propshaft	PS901373
	2016.05-		Front	Chassis Cabin 4WD CXHA/DNAA	Date to:2019.12,For PR code:0E1;Wheelbase:3000 mm	Joint,propshaft	605147
	2016.05-		Rear	Chassis Cabin 4WD CXHA/DNAA	Date to:2019.12,For PR code:0E1;Wheelbase:3000 mm	Joint,propshaft	602051
	2016.05-		Centre	Chassis Cabin 4WD CXHA/DNAA		Center Bearing Support Kit	539928S
2.0 (132 kw)	2009.09-2015.08		Centre	Bus FWD CFCA		Center Bearing Support	538670
	2009.09-2015.08		Centre	Van FWD CFCA		Center Bearing Support	538670
	2009.09-2015.08		Centre	Chassis Cabin FWD CFCA		Center Bearing Support	538670
	2010.01-2015.08	7AT	Front	Bus 4WD CFCA	Date from:2014.02,Wheelbase:3400 mm	Propshaft	PS901375
	2010.01-2015.08	AT	Front	Bus 4WD CFCA	Date from:2014.03,Wheelbase:3400 mm	Propshaft	PS901642
	2010.01-2015.08	MT	Front	Van 4WD CFCA	Date from:2014.03,Wheelbase:3000 mm	Propshaft	PS901375
	2010.01-2015.08	MT	Front	Chassis Cabin 4WD CFCA	Date from:2014.03,Wheelbase:3000 mm	Propshaft	PS901375
	2010.01-2015.08	MT	Front	Van 4WD CFCA	Date from:2014.03,Wheelbase:3400 mm	Propshaft	PS901642
	2010.01-2015.08	MT	Front	Chassis Cabin 4WD CFCA	Date from:2014.03,Wheelbase:3400 mm	Propshaft	PS901642
	2010.01-2015.08		Rear	Van 4WD CFCA	Date from:2014.02,For PR code:0E2;Wheelbase:3400 mm	Propshaft	PS901373
	2010.01-2015.08		Rear	Chassis Cabin 4WD CFCA	Date from:2014.02,For PR code:0E2;Wheelbase:3400 mm	Propshaft	PS901373
	2010.01-2015.08	6MT/7AT	Rear	Van 4WD CFCA	Date from:2011.04;Wheelbase:3000 mm	Propshaft	PS901350
	2010.01-2015.08	6MT/7AT	Rear	Chassis Cabin 4WD CFCA	Date from:2011.04;Wheelbase:3000 mm	Propshaft	PS901350
	2010.01-2015.08	7AT	Rear	Bus 4WD CFCA	Date from:2011.05;Wheelbase:3000 mm	Propshaft	PS901350
	2010.01-2015.08	AT	Rear	Bus 4WD CFCA	Date from:2014.02,For PR code:0E2	Propshaft	PS901373
	2010.01-2015.08	AT	Rear	Bus 4WD CFCA	Model:Transporter,Wheelbase:3400 mm,Date from:2011.03,Date to:2014.02,for PR code:0E2	Propshaft	PS901824
	2010.01-2015.08	AT	Rear	Van 4WD CFCA	Wheelbase:3400 mm,Date from:2011.03,Date to:2014.02,for PR code:0E2	Propshaft	PS901824
	2010.01-2015.08	AT	Rear	Chassis Cabin 4WD CFCA	Wheelbase:3400 mm,Date from:2011.03,Date to:2014.02,for PR code:0E2	Propshaft	PS901824
	2010.01-2015.08	7AT/6MT	Front	Bus 4WD CFCA	Model:Transporter,Date from:2011.04;Wheelbase:3000 mm	Joint,propshaft	605147
	2010.01-2015.08	7AT/6MT	Front	Van 4WD CFCA	Date from:2011.04;Wheelbase:3000 mm	Joint,propshaft	605147
	2010.01-2015.08	7AT/6MT	Front	Chassis Cabin 4WD CFCA	Date from:2011.04;Wheelbase:3000 mm	Joint,propshaft	605147
	2010.01-2015.08	7AT/6MT	Rear	Bus 4WD CFCA	Model:Transporter,Date from:2011.04;Wheelbase:3000 mm	Joint,propshaft	602051
	2010.01-2015.08	7AT/6MT	Rear	Van 4WD CFCA	Date from:2011.04;Wheelbase:3000 mm	Joint,propshaft	602051
	2010.01-2015.08	7AT/6MT	Rear	Chassis Cabin 4WD CFCA	Date from:2011.04;Wheelbase:3000 mm	Joint,propshaft	602051
	2010.01-2015.08		Centre	Bus 4WD CFCA		Center Bearing Support	538670
	2010.01-2015.08		Centre	Van 4WD CFCA		Center Bearing Support	538670
	2010.01-2015.08		Centre	Chassis Cabin 4WD CFCA		Center Bearing Support	538670
	2010.01-2015.08		Front	Bus 4WD CFCA		Center Bearing Support Kit	539920S
	2010.01-2015.08		Front	Van 4WD CFCA		Center Bearing Support Kit	539920S
	2010.01-2015.08		Front	Chassis Cabin 4WD CFCA		Center Bearing Support Kit	539920S
	2015.06-2019.11	MT	Front	Chassis Cabin 4WD CFCA	Wheelbase:3000 mm	Propshaft	PS901375
	2015.06-2019.11	MT	Front	Chassis Cabin 4WD CFCA	Wheelbase:3400 mm	Propshaft	PS901642
	2015.06-2019.11	AT	Rear	Chassis Cabin 4WD CFCA	For PR code:0E1;Wheelbase:3000 mm	Propshaft	PS901350
	2015.06-2019.11	AT	Rear	Chassis Cabin 4WD CFCA	For PR code:0E2;Wheelbase:3400 mm	Propshaft	PS901373
	2015.06-2019.11	AT	Front	Chassis Cabin 4WD CFCA	For PR code:0E1;Wheelbase:3000 mm	Joint,propshaft	605147
	2015.06-2019.11	AT	Rear	Chassis Cabin 4WD CFCA	For PR code:0E1;Wheelbase:3000 mm	Joint,propshaft	602051
	2015.06-2019.11		Centre	Chassis Cabin 4WD CFCA		Center Bearing Support Kit	539928S
	2015.06-2019.12	MT	Front	Van 4WD CFCA	Wheelbase:3000 mm	Propshaft	PS901375
	2015.06-2019.12	MT	Front	Bus 4WD CFCA	Wheelbase:3000 mm	Propshaft	PS901375
	2015.06-2019.12	MT	Front	Van 4WD CFCA	Wheelbase:3400 mm	Propshaft	PS901642
	2015.06-2019.12	MT	Front	Bus 4WD CFCA	Wheelbase:3400 mm	Propshaft	PS901642
	2015.06-2019.12		Rear	Van 4WD CFCA	For PR code:0E1;Wheelbase:3000 mm	Propshaft	PS901350
	2015.06-2019.12		Rear	Van 4WD CFCA	For PR code:0E2;Wheelbase:3400 mm	Propshaft	PS901373
	2015.06-2019.12	AT	Rear	Bus 4WD CFCA	For PR code:0E1;Wheelbase:3000 mm	Propshaft	PS901350
	2015.06-2019.12	AT	Rear	Bus 4WD CFCA	For PR code:0E2;Wheelbase:3400 mm	Propshaft	PS901373
	2015.06-2019.12		Front	Van 4WD CFCA	For PR code:0E1;Wheelbase:3000 mm	Joint,propshaft	605147
	2015.06-2019.12	AT	Front	Bus 4WD CFCA	Model:Transporter,For PR code:0E1;Wheelbase:3000 mm	Joint,propshaft	605147
	2015.06-2019.12		Rear	Van 4WD CFCA	For PR code:0E1;Wheelbase:3000 mm	Joint,propshaft	602051
	2015.06-2019.12	AT	Rear	Bus 4WD CFCA	Model:Transporter,For PR code:0E1;Wheelbase:3000 mm	Joint,propshaft	602051
	2015.06-2019.12		Centre	Van 4WD CFCA		Center Bearing Support Kit	539928S
	2015.06-2019.12		Centre	Bus 4WD CFCA		Center Bearing Support Kit	539928S
2.0 (146 kw)	2018.08-	AT	Front	Van 4WD CXEC	Date to:2019.12,Wheelbase:3000 mm	Propshaft	PS901375
	2018.08-	AT	Front	Van 4WD CXEC	Date to:2019.12,Wheelbase:3400 mm	Propshaft	PS901642
	2018.08-	7AT	Rear	Van 4WD CXEC	Date to:2019.12,For PR code:0E1;Wheelbase:3000 mm	Propshaft	PS901350
	2018.08-	7AT	Rear	Van 4WD CXEC	Date to:2019.12,For PR code:0E2;Wheelbase:3400 mm	Propshaft	PS901373
	2018.08-	7AT	Front	Van 4WD CXEC	Date to:2019.12,For PR code:0E1;Wheelbase:3000 mm	Joint,propshaft	605147
	2018.08-	7AT	Rear	Van 4WD CXEC	Date to:2019.12,For PR code:0E1;Wheelbase:3000 mm	Joint,propshaft	602051
	2018.08-		Centre	Van 4WD CXEC		Center Bearing Support Kit	539928S
	2019.08-	AT	Front	Chassis Cabin 4WD CXEC	Date to:2019.12,Wheelbase:3000 mm	Propshaft	PS901375
	2019.08-	AT	Front	Chassis Cabin 4WD CXEC	Date to:2019.12,Wheelbase:3400 mm	Propshaft	PS901642

	YEAR	TRANSM.	FITTING POSITION	BODY STYLE & DRIVE TYPE & ENGINE	REMARKS	PRODUCT	GSP Ref.
VW Transporter							
2.0 (146 kw)	2019.08-	7AT	Rear	Chassis Cabin 4WD CXEC	Date to:2019.12,For PR code:0E1;Wheelbase:3000 mm	Propshaft	PS901350
	2019.08-	7AT	Rear	Chassis Cabin 4WD CXEC	Date to:2019.12,For PR code:0E2;Wheelbase:3400 mm	Propshaft	PS901373
	2019.08-	7AT	Front	Chassis Cabin 4WD CXEC	Date to:2019.12,For PR code:0E1;Wheelbase:3000 mm	Joint,propshaft	605147
	2019.08-	7AT	Rear	Chassis Cabin 4WD CXEC	Date to:2019.12,For PR code:0E1;Wheelbase:3000 mm	Joint,propshaft	602051
	2019.08-		Centre	Chassis Cabin 4WD CXEC		Center Bearing Support Kit	539928S
2.0 (150 kw)	2011.05-2015.08	AT	Front	Bus 4WD CJKA	Date to:2014.02;Date from:2014.03,Wheelbase:3000 mm	Propshaft	PS901375
	2011.05-2015.08	AT	Front	Bus 4WD CJKA	Date from:2014.03,Wheelbase:3400 mm	Propshaft	PS901642
	2011.05-2015.08	7AT	Rear	Bus 4WD CJKA	Model:Transporter;Wheelbase:3000 mm	Propshaft	PS901350
	2011.05-2015.08	7AT	Rear	Bus 4WD CJKA	Date from:2014.02,For PR code:0E2;Wheelbase:3400 mm	Propshaft	PS901373
	2011.05-2015.08	AT	Rear	Bus 4WD CJKA	Model:Transporter,Wheelbase:3400 mm,Date to:2014.02,for PR code:0E2	Propshaft	PS901824
	2011.05-2015.08	7AT	Front	Bus 4WD CJKA	Model:Transporter;Wheelbase:3000 mm	Joint,propshaft	605147
	2011.05-2015.08	7AT	Rear	Bus 4WD CJKA	Model:Transporter;Wheelbase:3000 mm	Joint,propshaft	602051
	2011.05-2015.08		Centre	Bus 4WD CJKA		Center Bearing Support	538670
	2011.05-2015.08		Centre	Bus FWD CJKA		Center Bearing Support	538670
	2011.05-2015.08		Centre	Van FWD CJKA		Center Bearing Support	538670
	2011.05-2015.08		Front	Bus 4WD CJKA		Center Bearing Support Kit	539920S
	2011.07-2015.08	AT	Front	Van 4WD CJKA	Date to:2014.02;Date from:2014.03,Wheelbase:3000 mm	Propshaft	PS901375
	2011.07-2015.08	AT	Front	Van 4WD CJKA	Date from:2014.03,Wheelbase:3400 mm	Propshaft	PS901642
	2011.07-2015.08	7AT	Rear	Van 4WD CJKA	Wheelbase:3000 mm	Propshaft	PS901350
	2011.07-2015.08	7AT	Rear	Van 4WD CJKA	Date from:2014.02,For PR code:0E2;Wheelbase:3400 mm	Propshaft	PS901373
	2011.07-2015.08	AT	Rear	Van 4WD CJKA	Wheelbase:3400 mm,Date to:2014.02,for PR code:0E2	Propshaft	PS901824
	2011.07-2015.08	7AT	Front	Van 4WD CJKA	Wheelbase:3000 mm	Joint,propshaft	605147
	2011.07-2015.08	7AT	Rear	Van 4WD CJKA	Wheelbase:3000 mm	Joint,propshaft	602051
	2011.07-2015.08		Centre	Van 4WD CJKA		Center Bearing Support	538670
	2011.07-2015.08		Front	Van 4WD CJKA		Center Bearing Support Kit	539920S
	2015.06-	MT	Front	Bus 4WD CXEB/DMZA	Date to:2019.12,Wheelbase:3000 mm	Propshaft	PS901375
	2015.06-	MT	Front	Van 4WD CXEB/DMZA	Date to:2019.12,Wheelbase:3000 mm	Propshaft	PS901375
	2015.06-	MT	Front	Bus 4WD CXEB/DMZA	Date to:2019.12,Wheelbase:3400 mm	Propshaft	PS901642
	2015.06-	MT	Front	Van 4WD CXEB/DMZA	Date to:2019.12,Wheelbase:3400 mm	Propshaft	PS901642
	2015.06-		Rear	Van 4WD CXEB/DMZA	Date to:2019.12,For PR code:0E1;Wheelbase:3000 mm	Propshaft	PS901350
	2015.06-		Rear	Van 4WD CXEB/DMZA	Date to:2019.12,For PR code:0E2;Wheelbase:3400 mm	Propshaft	PS901373
	2015.06-	AT	Rear	Bus 4WD CXEB/DMZA	Date to:2019.12,For PR code:0E1;Wheelbase:3000 mm	Propshaft	PS901350
	2015.06-	AT	Rear	Bus 4WD CXEB/DMZA	Date to:2019.12,For PR code:0E2;Wheelbase:3400 mm	Propshaft	PS901373
	2015.06-		Front	Van 4WD CXEB/DMZA	Date to:2019.12,For PR code:0E1;Wheelbase:3000 mm	Joint,propshaft	605147
	2015.06-	AT	Front	Bus 4WD CXEB/DMZA	Date to:2019.12,For PR code:0E1;Wheelbase:3000 mm	Joint,propshaft	605147
	2015.06-		Rear	Van 4WD CXEB/DMZA	Date to:2019.12,For PR code:0E1;Wheelbase:3000 mm	Joint,propshaft	602051
	2015.06-	AT	Rear	Bus 4WD CXEB/DMZA	Date to:2019.12,For PR code:0E1;Wheelbase:3000 mm	Joint,propshaft	602051
	2015.06-		Centre	Bus 4WD CXEB/DMZA		Center Bearing Support Kit	539928S
	2015.06-		Centre	Van 4WD CXEB/DMZA		Center Bearing Support Kit	539928S
	2015.06-2019.07	AT	Front	Van 4WD CJKA	Wheelbase:3000 mm	Propshaft	PS901375
	2015.06-2019.07	AT	Front	Bus 4WD CJKA	Wheelbase:3000 mm	Propshaft	PS901375
	2015.06-2019.07	AT	Front	Van 4WD CJKA	Wheelbase:3400 mm	Propshaft	PS901642
	2015.06-2019.07	AT	Front	Bus 4WD CJKA	Wheelbase:3400 mm	Propshaft	PS901642
	2015.06-2019.07	7AT	Rear	Van 4WD CJKA	For PR code:0E1;Wheelbase:3000 mm	Propshaft	PS901350
	2015.06-2019.07	7AT	Rear	Bus 4WD CJKA	For PR code:0E1;Wheelbase:3000 mm	Propshaft	PS901350
	2015.06-2019.07	7AT	Rear	Van 4WD CJKA	For PR code:0E2;Wheelbase:3400 mm	Propshaft	PS901373
	2015.06-2019.07	7AT	Rear	Bus 4WD CJKA	For PR code:0E2;Wheelbase:3400 mm	Propshaft	PS901373
	2015.06-2019.07	7AT	Front	Van 4WD CJKA	For PR code:0E1;Wheelbase:3000 mm	Joint,propshaft	605147
	2015.06-2019.07	7AT	Front	Bus 4WD CJKA	Model:Transporter,For PR code:0E1;Wheelbase:3000 mm	Joint,propshaft	605147
	2015.06-2019.07	7AT	Rear	Van 4WD CJKA	For PR code:0E1;Wheelbase:3000 mm	Joint,propshaft	602051
	2015.06-2019.07	7AT	Rear	Bus 4WD CJKA	Model:Transporter,For PR code:0E1;Wheelbase:3000 mm	Joint,propshaft	602051
	2015.06-2019.07		Centre	Van 4WD CJKA		Center Bearing Support Kit	539928S
	2015.06-2019.07		Centre	Bus 4WD CJKA		Center Bearing Support Kit	539928S
	2016.05-	MT	Front	Chassis Cabin 4WD CXEB/DMZA	Wheelbase:3000 mm	Propshaft	PS901375
	2016.05-	MT	Front	Chassis Cabin 4WD CXEB/DMZA	Wheelbase:3400 mm	Propshaft	PS901642
	2016.05-		Rear	Chassis Cabin 4WD CXEB/DMZA	For PR code:0E1;Wheelbase:3000 mm	Propshaft	PS901350
	2016.05-		Rear	Chassis Cabin 4WD CXEB/DMZA	For PR code:0E2;Wheelbase:3400 mm	Propshaft	PS901373
	2016.05-		Front	Chassis Cabin 4WD CXEB/DMZA	For PR code:0E1;Wheelbase:3000 mm	Joint,propshaft	605147
	2016.05-		Rear	Chassis Cabin 4WD CXEB/DMZA	For PR code:0E1;Wheelbase:3000 mm	Joint,propshaft	602051
	2016.05-		Centre	Chassis Cabin 4WD CXEB/DMZA		Center Bearing Support Kit	539928S
2.4 (55 kw)	1997.08-2003.04		Centre	Platform/Chassis FWD AJA		Center Bearing Support	538652
	1997.08-2003.04		Centre	Van FWD AJA		Center Bearing Support	538652
2.4 (57 kw)	1990.07-1998.04		Centre	Van FWD AAB		Center Bearing Support	538652
	1990.09-1998.04		Centre	Platform/Chassis FWD AAB		Center Bearing Support	538652

	YEAR	TRANSM.	FITTING POSITION	BODY STYLE & DRIVE TYPE & ENGINE	REMARKS	PRODUCT	GSP Ref.
VW Transporter							
2.4 (57 kw)	1992.10-1998.09		Centre	Platform/Chassis 4WD AAB		Center Bearing Support	538652
	1992.10-1998.09		Centre	Van 4WD AAB		Center Bearing Support	538652
	1992.10-1998.09		Front	Platform/Chassis 4WD AAB		Flexible Coupling	537853
	1992.10-1998.09		Front	Van 4WD AAB		Flexible Coupling	537853
2.5 (65 kw)	1998.05-2003.04		Centre	Bus FWD AJT, AYY		Center Bearing Support	538652
	1998.05-2003.04		Centre	Platform/Chassis FWD AJT, AYY		Center Bearing Support	538652
	1998.12-2003.04		Centre	Van FWD AJT, AYY		Center Bearing Support	538652
2.5 (75 kw)	1995.09-2003.04		Centre	Van FWD ACV, AUF, AYC		Center Bearing Support	538652
	1995.09-2003.04		Centre	Platform/Chassis FWD ACV, AUF, AYC		Center Bearing Support	538652
	1995.09-2003.04		Centre	Van 4WD ACV, AXL		Center Bearing Support	538652
	1995.09-2003.04		Front	Van 4WD ACV, AXL		Flexible Coupling	537853
	1998.05-2003.04		Centre	Platform/Chassis 4WD ACV, AXL		Center Bearing Support	538652
	1998.05-2003.04		Front	Platform/Chassis 4WD ACV, AXL		Flexible Coupling	537853
2.5 (81 kw)	1990.11-2003.04		Centre	Platform/Chassis FWD AAF (11.90-12.93), ACU (01.94-08.96), AEN, AEU		Center Bearing Support	538652
	1990.11-2003.04		Centre	Van FWD AAF (11.90-12.93), ACU (01.94-08.96), AEN, AEU		Center Bearing Support	538652
	1992.11-2001.11		Centre	Platform/Chassis 4WD AAF (11.92-12.93), ACU (01.94-10.96), AEU (06.97-11.01)		Center Bearing Support	538652
	1992.11-2001.11		Centre	Van 4WD AAF (11.92-12.93), ACU (01.94-10.96), AEU (06.97-11.01)		Center Bearing Support	538652
	1992.11-2001.11		Front	Platform/Chassis 4WD AAF (11.92-12.93), ACU (01.94-10.96), AEU (06.97-11.01)		Flexible Coupling	537853
	1992.11-2001.11		Front	Van 4WD AAF (11.92-12.93), ACU (01.94-10.96), AEU (06.97-11.01)		Flexible Coupling	537853
2.5 (85 kw)	1996.08-2003.04		Centre	Van 4WD AET (08.96-.), APL (05.99-.), AVT		Center Bearing Support	538652
	1996.08-2003.04		Centre	Van FWD AET (08.96-.), APL (05.99-.), AVT		Center Bearing Support	538652
	1996.08-2003.04		Centre	Platform/Chassis 4WD AET (08.96-.), APL (05.99-.), AVT		Center Bearing Support	538652
	1996.08-2003.04		Centre	Platform/Chassis FWD AET (08.96-.), APL (05.99-.), AVT		Center Bearing Support	538652
	1996.08-2003.04		Front	Van 4WD AET (08.96-.), APL (05.99-.), AVT		Flexible Coupling	537853
	1996.08-2003.04		Front	Platform/Chassis 4WD AET (08.96-.), APL (05.99-.), AVT		Flexible Coupling	537853
2.5 (96 kw)	2003.04-2009.11		Centre	Chassis Cabin FWD AXD/BNZ		Center Bearing Support	538670
	2003.04-2009.11		Centre	Van FWD AXD/BNZ		Center Bearing Support	538670
	2004.07-2009.11	MT	Front	Chassis Cabin 4WD AXD/BNZ		Propshaft	PS901375
	2004.07-2009.11	MT	Front	Van 4WD AXD/BNZ		Propshaft	PS901375
	2004.07-2009.11	6AT/6MT	Rear	Chassis Cabin 4WD AXD/BNZ	wheelbase:3400 mm,For PR code:0E2	Propshaft	PS900569
	2004.07-2009.11	6AT/6MT	Rear	Van 4WD AXD/BNZ	wheelbase:3400 mm,For PR code:0E2	Propshaft	PS900569
	2004.07-2009.11	6AT/6MT	Rear	Chassis Cabin 4WD AXD/BNZ	wheelbase:3000 mm,For PR code:0E1	Propshaft	PS900570
	2004.07-2009.11	6AT/6MT	Rear	Van 4WD AXD/BNZ	wheelbase:3000 mm,For PR code:0E1	Propshaft	PS900570
	2004.07-2009.11	6AT/6MT	Rear	Chassis Cabin 4WD AXD/BNZ	wheel base:3000mm,For PR code:0E1	Joint,propshaft	602478
	2004.07-2009.11	6AT/6MT	Rear	Van 4WD AXD/BNZ	wheel base:3000mm,For PR code:0E1	Joint,propshaft	602478
	2004.07-2009.11		Front	Chassis Cabin 4WD AXD/BNZ		Center Bearing Support	538614
	2004.07-2009.11		Front	Van 4WD AXD/BNZ		Center Bearing Support	538614
	2004.07-2009.11		Rear	Chassis Cabin 4WD AXD/BNZ		Center Bearing Support	538618
	2004.07-2009.11		Rear	Van 4WD AXD/BNZ		Center Bearing Support	538618
	2004.07-2009.11		Centre	Chassis Cabin 4WD AXD/BNZ		Center Bearing Support	538670
	2004.07-2009.11		Centre	Van 4WD AXD/BNZ		Center Bearing Support	538670
	2004.07-2009.11		Front	Chassis Cabin 4WD AXD/BNZ		Center Bearing Support Kit	539920S
	2004.07-2009.11		Front	Van 4WD AXD/BNZ		Center Bearing Support Kit	539920S
2.5 (111 kw)	2000.09-2003.04		Centre	Van FWD AHY, AXG		Center Bearing Support	538652
2.5 (128 kw)	2003.05-2009.11		Centre	Chassis Cabin FWD AXE/BPC		Center Bearing Support	538670
	2003.05-2009.11		Centre	Van FWD AXE/BPC		Center Bearing Support	538670
	2003.10-2009.11	MT	Front	Chassis Cabin 4WD AXE/BPC		Propshaft	PS901375
	2003.10-2009.11	6AT/6MT	Rear	Chassis Cabin 4WD AXE/BPC	wheelbase:3400 mm,For PR code:0E2	Propshaft	PS900569
	2003.10-2009.11	6AT/6MT	Rear	Chassis Cabin 4WD AXE/BPC	wheelbase:3000 mm,For PR code:0E1	Propshaft	PS900570
	2003.10-2009.11	6AT/6MT	Rear	Chassis Cabin 4WD AXE/BPC	wheel base:3000mm,For PR code:0E1	Joint,propshaft	602478
	2003.10-2009.11		Front	Chassis Cabin 4WD AXE/BPC		Center Bearing Support	538614
	2003.10-2009.11		Rear	Chassis Cabin 4WD AXE/BPC		Center Bearing Support	538618
	2003.10-2009.11		Centre	Chassis Cabin 4WD AXE/BPC		Center Bearing Support	538670
	2003.10-2009.11		Front	Chassis Cabin 4WD AXE/BPC		Center Bearing Support Kit	539920S
	2004.07-2009.11	MT	Front	Van 4WD AXE/BPC		Propshaft	PS901375
	2004.07-2009.11	6AT/6MT	Rear	Van 4WD AXE/BPC	wheelbase:3400 mm,For PR code:0E2	Propshaft	PS900569
	2004.07-2009.11	6AT/6MT	Rear	Van 4WD AXE/BPC	wheelbase:3000 mm,For PR code:0E1	Propshaft	PS900570
	2004.07-2009.11	6AT/6MT	Rear	Van 4WD AXE/BPC	wheel base:3000mm,For PR code:0E1	Joint,propshaft	602478
	2004.07-2009.11		Front	Van 4WD AXE/BPC		Center Bearing Support	538614
	2004.07-2009.11		Rear	Van 4WD AXE/BPC		Center Bearing Support	538618
	2004.07-2009.11		Centre	Van 4WD AXE/BPC		Center Bearing Support	538670
	2004.07-2009.11		Front	Van 4WD AXE/BPC		Center Bearing Support Kit	539920S
3.2 (173 kw)	2003.08-2009.11		Centre	Chassis Cabin FWD BDL/BKK		Center Bearing Support	538670
	2003.11-2009.11		Centre	Chassis Cabin 4WD BDL		Center Bearing Support	538670

	YEAR	TRANSM.	FITTING POSITION	BODY STYLE & DRIVE TYPE & ENGINE	REMARKS	PRODUCT	GSP Ref.
VW							
Transporter							
3.2 (173 kw)	2003.11-2009.11		Front	Chassis Cabin 4WD BDL		Center Bearing Support Kit	539920S
	2004.02-2009.11		Centre	Van FWD BDL/BKK/CFLA		Center Bearing Support	538670
	2004.03-2009.11	MT	Front	Van 4WD BDL/BKK/CFLA	Date from:2004.03,For Engine code:BKK	Propshaft	PS901375
	2004.03-2009.11	6AT/6MT	Rear	Van 4WD BDL/BKK/CFLA	wheelbase:3400 mm,For PR code:0E2	Propshaft	PS900569
	2004.03-2009.11	6AT/6MT	Rear	Van 4WD BDL/BKK/CFLA	wheelbase:3000 mm,For PR code:0E1	Propshaft	PS900570
	2004.03-2009.11	6AT/6MT	Rear	Van 4WD BDL/BKK/CFLA	wheel base:3000mm,For PR code:0E1	Joint,propshaft	602478
	2004.03-2009.11		Front	Van 4WD BDL/BKK/CFLA		Center Bearing Support	538614
	2004.03-2009.11		Rear	Van 4WD BDL/BKK/CFLA		Center Bearing Support	538618
	2004.03-2009.11		Centre	Van 4WD BDL/BKK/CFLA		Center Bearing Support	538670
	2004.03-2009.11		Front	Van 4WD BDL/BKK/CFLA		Center Bearing Support Kit	539920S
Transporter Shuttle							
1.9 (62 kw)	2006.01-2009.11		Centre	Bus FWD BRR		Center Bearing Support	538670
1.9 (63 kw)	2003.04-2009.11		Centre	Bus FWD AXC		Center Bearing Support	538670
1.9 (75 kw)	2005.06-2009.11		Centre	Bus FWD BRS		Center Bearing Support	538670
1.9 (77 kw)	2003.04-2009.11		Centre	Bus FWD AXB		Center Bearing Support	538670
2.0 (62 kw)	2009.09-2015.08		Centre	Bus FWD CAAA		Center Bearing Support	538670
2.0 (75 kw)	2009.09-2015.08		Centre	Bus FWD CAAB		Center Bearing Support	538670
2.0 (84 kw)	2011.05-2015.08		Centre	Bus FWD CAAD		Center Bearing Support	538670
2.0 (85 kw)	2003.11-2009.11		Centre	Bus FWD AXA		Center Bearing Support	538670
2.0 (103 kw)	2009.09-2015.08		Centre	Bus FWD CAAC/CCHA		Center Bearing Support	538670
	2009.10-2015.08	MT	Front	Bus 4WD CAAC/CCHA	Date to:2014.02;Date from:2014.03,Wheelbase:3000 mm	Propshaft	PS901375
	2009.10-2015.08	MT	Front	Bus 4WD CAAC/CCHA	Date from:2014.03,Wheelbase:3400 mm	Propshaft	PS901642
	2009.10-2015.08	6MT	Rear	Bus 4WD CAAC/CCHA	Wheelbase:3000 mm	Propshaft	PS901350
	2009.10-2015.08	6MT	Rear	Bus 4WD CAAC/CCHA	Date from:2014.02,For PR code:0E2;Wheelbase:3400 mm	Propshaft	PS901373
	2009.10-2015.08	6MT	Front	Bus 4WD CAAC/CCHA	Model:Transporter;Model:Transporter;Date from:2011.04;Wheelbase:3000 mm	Joint,propshaft	605147
	2009.10-2015.08	6MT	Rear	Bus 4WD CAAC/CCHA	Model:Transporter;Model:Transporter;Date from:2011.04;Wheelbase:3000 mm	Joint,propshaft	602051
	2009.10-2015.08		Centre	Bus 4WD CAAC/CCHA		Center Bearing Support	538670
	2009.10-2015.08		Front	Bus 4WD CAAC/CCHA		Center Bearing Support Kit	539920S
2.0 (132 kw)	2011.05-2015.08	7AT	Front	Bus 4WD CFCA	Date from:2014.03,Wheelbase:3000 mm	Propshaft	PS901375
	2011.05-2015.08	AT	Front	Bus 4WD CFCA	Date from:2014.03,Wheelbase:3400 mm	Propshaft	PS901642
	2011.05-2015.08	7AT	Rear	Bus 4WD CFCA	Date from:2011.05;Wheelbase:3000 mm	Propshaft	PS901350
	2011.05-2015.08	AT	Rear	Bus 4WD CFCA	Date from:2014.02,For PR code:0E2;Wheelbase:3400 mm	Propshaft	PS901373
	2011.05-2015.08	6MT/7AT	Front	Bus 4WD CFCA	Model:Transporter,Date from:2011.04;Wheelbase:3000 mm	Joint,propshaft	605147
	2011.05-2015.08	6MT/7AT	Rear	Bus 4WD CFCA	Model:Transporter,Date from:2011.04;Wheelbase:3000 mm	Joint,propshaft	602051
	2011.05-2015.08		Centre	Bus FWD CFCA		Center Bearing Support	538670
	2011.05-2015.08		Centre	Bus 4WD CFCA		Center Bearing Support	538670
	2011.05-2015.08		Front	Bus 4WD CFCA		Center Bearing Support Kit	539920S
2.5 (96 kw)	2003.04-2009.11		Centre	Bus FWD AXD/BNZ		Center Bearing Support	538670
	2004.07-2009.11	MT	Front	Bus 4WD AXD		Propshaft	PS901375
	2004.07-2009.11	6MT	Rear	Bus 4WD AXD	wheelbase:3400 mm,For PR code:0E2	Propshaft	PS900569
	2004.07-2009.11	6MT	Rear	Bus 4WD AXD	Chassis no. from:7H-9-105 001,wheelbase:3000 mm,For PR code:0E1/3M1/3M5/3M6/3M7/3M8/3M4	Propshaft	PS900570
	2004.07-2009.11	6MT	Rear	Bus 4WD AXD	----------	Joint,propshaft	602478
	2004.07-2009.11		Front	Bus 4WD AXD		Center Bearing Support	538614
	2004.07-2009.11		Rear	Bus 4WD AXD		Center Bearing Support	538618
	2004.07-2009.11		Centre	Bus 4WD AXD		Center Bearing Support	538670
	2004.07-2009.11		Front	Bus 4WD AXD		Center Bearing Support Kit	539920S
2.5 (120 kw)	2003.11-2009.11		Centre	Bus FWD BLJ		Center Bearing Support	538670
2.5 (128 kw)	2004.07-2009.11	MT	Front	Bus 4WD AXE	Vehicle type:Caravelle	Propshaft	PS901375
	2004.07-2009.11	6MT	Rear	Bus 4WD AXE	Model:Caravelle,wheelbase:3400 mm,For PR code:0E2	Propshaft	PS900569
	2004.07-2009.11	6MT	Rear	Bus 4WD AXE	Model:Caravelle,Chassis no. from:7H-9-105 001,wheelbase:3000 mm,For PR code:0E1/3M1/3M5/3M4	Propshaft	PS900570
	2004.07-2009.11	6MT	Rear	Bus 4WD AXE	Model:Caravelle,Chassis no. from:7H-9-105 001,wheel base:3000mm,For PR code:0E1,3M1,3M3,3M4	Joint,propshaft	602478
	2004.07-2009.11		Front	Bus 4WD AXE		Center Bearing Support	538614
	2004.07-2009.11		Rear	Bus 4WD AXE		Center Bearing Support	538618
	2004.07-2009.11		Centre	Bus FWD AXE/BPC		Center Bearing Support	538670
	2004.07-2009.11		Centre	Bus 4WD AXE		Center Bearing Support	538670
	2004.07-2009.11		Front	Bus 4WD AXE		Center Bearing Support Kit	539920S
3.2 (173 kw)	2003.11-2009.12	MT	Front	Bus 4WD BKK/CFLA	Model:Transporter Shuttle,not for Engine code:CFLA	Propshaft	PS901375
	2003.11-2009.12	6MT	Rear	Bus 4WD BKK/CFLA	wheelbase:3400 mm,For PR code:0E2	Propshaft	PS900569
	2003.11-2009.12	6MT	Rear	Bus 4WD BKK/CFLA	Chassis no. from:7H-9-105 001,wheelbase:3000 mm,For PR code:0E1/3M1/3M5/3M6/3M7/3M8/3M4	Propshaft	PS900570
	2003.11-2009.12	6MT	Rear	Bus 4WD BKK/CFLA	----------	Joint,propshaft	602478
	2003.11-2009.12		Front	Bus 4WD BKK/CFLA		Center Bearing Support	538614
	2003.11-2009.12		Rear	Bus 4WD BKK/CFLA		Center Bearing Support	538618
	2003.11-2009.12		Centre	Bus 4WD BKK/CFLA		Center Bearing Support	538670
	2003.11-2009.12		Front	Bus 4WD BKK/CFLA		Center Bearing Support Kit	539920S

	YEAR	TRANSM.	FITTING POSITION	BODY STYLE & DRIVE TYPE & ENGINE	REMARKS	PRODUCT	GSP Ref.
VW **Transporter Shuttle**							
3.2 (173 kw)	2004.02-2009.11		Centre	Bus FWD BDL/BKK		Center Bearing Support	538670
Transporter/Caravelle							
2.5 (75 kw)	1995.09-2003.04		Centre	Bus FWD ACV, AUF, AYC		Center Bearing Support	538652
VW (SVW) **Tiguan**							
1.8 (118 kw)	2010.03-2017.12		Rear	SUV 4WD CEAA		Propshaft	PS900519
2.0 (147 kw)	2010.03-2017.12		Rear	SUV 4WD CGMA		Propshaft	PS900519

Drive Line Part

Photo……

201406	201782	201958	201972
CHRYSLER 52105990AA CHRYSLER 52123021AA CHRYSLER 52123021AB CHRYSLER 52123021AC	JEEP 52105884AA	MERCEDES-BENZ 1644100501 MERCEDES-BENZ 1644100701 MERCEDES-BENZ 1664100001 MERCEDES-BENZ 1664102301 MERCEDES-BENZ A1644100501 MERCEDES-BENZ A1644100701 MERCEDES-BENZ A1664100001 MERCEDES-BENZ A1664102301	FORD 6L244A376CA FORD 6L2Z4A376A FORD 6L2Z4A376AA FORD 6L2Z4A376B

202065	202067	202068	202069
MERCEDES-BENZ 4634100102 MERCEDES-BENZ A4634100102	MERCEDES-BENZ 4634100202 MERCEDES-BENZ A4634100202	MERCEDES-BENZ 4634100502 MERCEDES-BENZ A4634100502	MERCEDES-BENZ 4634100602 MERCEDES-BENZ A4634100602

202070	202071	202072	202101
MERCEDES-BENZ 4634100702 MERCEDES-BENZ A4634100702	MERCEDES-BENZ 4634100802 MERCEDES-BENZ A4634100802	MERCEDES-BENZ 4634100902 MERCEDES-BENZ A4634100902	JEEP 52853431AA

Drive Line Part

Photo……

202102	
JEEP	52853432AA
JEEP	K52853432AA

202280	
CHRYSLER	52105758AB
CHRYSLER	52105758AC
CHRYSLER	52105758AE
JEEP	00K52105758AB
JEEP	00K52105758AC
JEEP	00K52105758AD
JEEP	52105758AD
JEEP	P52105758AE

202281	
CHRYSLER	52105728AB
CHRYSLER	52105728AC
CHRYSLER	52105728AE
JEEP	52105728AD

202398	
MERCEDES-BENZ	4634100106
MERCEDES-BENZ	A4634100106

202439	
GENERAL MOTORS	15104642
GENERAL MOTORS	25843685
ISUZU	8151046420
ISUZU	8258436850

202440	
CHRYSLER	52099497
JEEP	52099497AC
JEEP	52099497AD
JEEP	52099497AE

202441	
JEEP	52111594AA
JEEP	52111596AA
JEEP	52111596AB

202442	
CHRYSLER	52099498
JEEP	52099498AB
JEEP	52099498AD
JEEP	52099498AE

202443	
JEEP	52111597AA

202521	
CHRYSLER	52853442AC
CHRYSLER	52853442AD
CHRYSLER	52853442AE
CHRYSLER	52853442AF

202522	
CHRYSLER	52853363AB
CHRYSLER	52853363AC
CHRYSLER	52853363AD
CHRYSLER	52853363AE
CHRYSLER	52853363AF

202537	
CHEVROLET	15087453
CHEVROLET	15090195
CHEVROLET	15182098
CHEVROLET	15719954
CHEVROLET	15769055
CHEVROLET	84060396
CHEVROLET	84669663

Drive Line Part

Photo……

202538	
CHEVROLET	15087450
CHEVROLET	15090192
CHEVROLET	15182095
CHEVROLET	15711973
CHEVROLET	15764125

202539	
CHEVROLET	15902927
CHEVROLET	22845694
CHEVROLET	25822589
GENERAL MOTORS	15247183
GENERAL MOTORS	22847355
GMC	22760960
GMC	23197289

299302	
FORD	7L1Z4A376A
FORD	7L1Z4A376B
FORD	AL3Z4A376C
FORD	AL3Z4A376D

299303	
HUMMER	10376298
HUMMER	15860584
HUMMER	15878295
HUMMER	25859867

299304	
CHEVROLET	15114531
CHEVROLET	15188059
GENERAL MOTORS	15038488
GENERAL MOTORS	15762970
GENERAL MOTORS	26032451
GENERAL MOTORS	94717722

510433	
MERCEDES-BENZ	2014101015
MERCEDES-BENZ	2014102115
MERCEDES-BENZ	A2014101015
MERCEDES-BENZ	A2014102115

510433S	
MERCEDES-BENZ	1244100015
MERCEDES-BENZ	2014100615
MERCEDES-BENZ	2014101015
MERCEDES-BENZ	2024101215
MERCEDES-BENZ	A1244100015
MERCEDES-BENZ	A2014100615
MERCEDES-BENZ	A2014101015
MERCEDES-BENZ	A2024101215

510434S	
MERCEDES-BENZ	1244100115
MERCEDES-BENZ	1244100615
MERCEDES-BENZ	1244100715
MERCEDES-BENZ	1264100515
MERCEDES-BENZ	2014101815
MERCEDES-BENZ	A1244100115
MERCEDES-BENZ	A1244100615
MERCEDES-BENZ	A1244100715

510436	
MERCEDES-BENZ	1234110315
MERCEDES-BENZ	1244110415
MERCEDES-BENZ	A1234110315
MERCEDES-BENZ	A1244110415

510458	
MERCEDES-BENZ	2024100615
MERCEDES-BENZ	A2024100615

510459S	
MERCEDES-BENZ	2014100715
MERCEDES-BENZ	2024101015
MERCEDES-BENZ	A2014100715
MERCEDES-BENZ	A2024101015

510460	
MERCEDES-BENZ	1244110015
MERCEDES-BENZ	2024110615
MERCEDES-BENZ	A1244110015
MERCEDES-BENZ	A2024110615

Drive Line Part

Photo……

510569	510570S	510571	510571S
MERCEDES-BENZ 1244110115 MERCEDES-BENZ 1244110615 MERCEDES-BENZ 2024100315 MERCEDES-BENZ A1244110115 MERCEDES-BENZ A1244110615 MERCEDES-BENZ A2024100315	MERCEDES-BENZ 1244100215 MERCEDES-BENZ 1244110115 MERCEDES-BENZ 1244110615 MERCEDES-BENZ 2014101715 MERCEDES-BENZ 2024100315 MERCEDES-BENZ 2024101315 MERCEDES-BENZ A1244100215 MERCEDES-BENZ A1244110115	MERCEDES-BENZ 1244110315 MERCEDES-BENZ 1244110515 MERCEDES-BENZ 2024100515 MERCEDES-BENZ A1244110315 MERCEDES-BENZ A1244110515 MERCEDES-BENZ A2024100515	MERCEDES-BENZ 1294100215 MERCEDES-BENZ 2104101115 MERCEDES-BENZ A1294100215 MERCEDES-BENZ A2104101115

510575	510576S	510578S	510579
MERCEDES-BENZ 1074110015 MERCEDES-BENZ 1074110215 MERCEDES-BENZ 1264110215 MERCEDES-BENZ A1074110015 MERCEDES-BENZ A1074110215 MERCEDES-BENZ A1264110215	MERCEDES-BENZ 1074100015 MERCEDES-BENZ 1075860041 MERCEDES-BENZ 1264100415 MERCEDES-BENZ A1074100015 MERCEDES-BENZ A1075860041 MERCEDES-BENZ A1264100415	MERCEDES-BENZ 2024101115 MERCEDES-BENZ A2024101115	MERCEDES-BENZ 1244110215 MERCEDES-BENZ 2104110515 MERCEDES-BENZ A1244110215 MERCEDES-BENZ A2104110515

510579S	510580S	510596	510596S
MERCEDES-BENZ 1704100215 MERCEDES-BENZ A1704100215	MERCEDES-BENZ 1294100015 MERCEDES-BENZ 1704100015 MERCEDES-BENZ 2024100915 MERCEDES-BENZ 2024101915 MERCEDES-BENZ 2104100815 MERCEDES-BENZ A1294100015 MERCEDES-BENZ A1704100015 MERCEDES-BENZ A2024100915	BMW 26111209168 BMW 26111227420 BMW 26111229360 BMW 26117511454 BMW 7511454 VOLVO 1220843	BMW 26111209168 BMW 26111227420 BMW 26117511454

Drive Line Part

Photo……

510597	
BMW	26111227410
BMW	26111227869
BMW	26111229516
HYUNDAI	4919026000

510597S	
BMW	26111227410
BMW	26111227869

510641	
BMW	26111204294
BMW	26111207785
BMW	26111225624
BMW	26117503159
OPEL	0458364
OPEL	458364
OPEL	90222781

510641S	
BMW	26111204294
BMW	26111207785
BMW	26111225624

510663	
BMW	26111227690
BMW	26111229065

511086	
TOYOTA	0437428010
TOYOTA	0437428011

511086S	
TOYOTA	0437428010
TOYOTA	0437428011

512326	
MERCEDES-BENZ	2024100015
MERCEDES-BENZ	2024101115
MERCEDES-BENZ	A2024100015
MERCEDES-BENZ	A2024101115

512672	
MERCEDES-BENZ	2034100015
MERCEDES-BENZ	2104100215
MERCEDES-BENZ	A2034100015
MERCEDES-BENZ	A2104100215

512672S	
MERCEDES-BENZ	1404100315
MERCEDES-BENZ	A1404100315

512673S	
MERCEDES-BENZ	0004110000
MERCEDES-BENZ	1704100115
MERCEDES-BENZ	2024101815
MERCEDES-BENZ	2104101215
MERCEDES-BENZ	2104110415
MERCEDES-BENZ	2104110415S
MERCEDES-BENZ	2114100115
MERCEDES-BENZ	A0004110000

512676	
MERCEDES-BENZ	1404100115
MERCEDES-BENZ	A1404100115

Drive Line Part

Photo……

512677	
CHRYSLER	05127291AA
CHRYSLER	5127291AA
CHRYSLER	K05127291AA
MERCEDES-BENZ	0004110200
MERCEDES-BENZ	05174044AA
MERCEDES-BENZ	1644103102
MERCEDES-BENZ	1664105900
MERCEDES-BENZ	2034100215

512677S	
MERCEDES-BENZ	0004110200
MERCEDES-BENZ	05127291AA
MERCEDES-BENZ	1404100415
MERCEDES-BENZ	2034100215
MERCEDES-BENZ	2034110015
MERCEDES-BENZ	2104100615
MERCEDES-BENZ	2104110215
MERCEDES-BENZ	2304100115

512678	
MERCEDES-BENZ	0004110000
MERCEDES-BENZ	1704100115
MERCEDES-BENZ	1714110015
MERCEDES-BENZ	2024101815
MERCEDES-BENZ	2104101215
MERCEDES-BENZ	2104110415
MERCEDES-BENZ	5144110015
MERCEDES-BENZ	A0004110000

512678S	
MERCEDES-BENZ	2114100115
MERCEDES-BENZ	A2114100115

513053S	
TOYOTA	0437428020

517649	
LEXUS	3751124010

517747	
MERCEDES-BENZ	2024110515
MERCEDES-BENZ	A2024110515

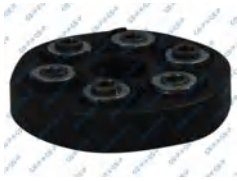

517955	
BMW	26117546425
BMW	26117610061

517955S	
BMW	26117546425
BMW	26117605629
BMW	26117610061

517956	
BMW	26117507328
BMW	26117512619
BMW	26117573276

517956S	
BMW	26117512619
BMW	26117573276

517957	
FORD	CK4Z4782B
PORSCHE	95542101000
PORSCHE	95542102011
PORSCHE	95542102012
PORSCHE	95542102013
PORSCHE	95542102014
PORSCHE	95542102015
PORSCHE	95542102021

Drive Line Part

Photo……

517957S	
PORSCHE	95542101000
PORSCHE	95542102021
VW	7L0521403
VW	7L6521403

519580	
HYUNDAI	4919026000
HYUNDAI	491902EB00

530160	
BMW	26111229754
BMW	26117572664

530160S	
BMW	26111229754
BMW	26117572664

530758	
BMW	26117542238
BMW	7542238

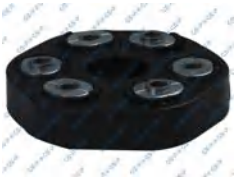

530758S	
BMW	26117542238

533418	
FORD	1948706
FORD	2001258
FORD	2459508
FORD	4165078
FORD	CC114K357DD
FORD	CC114K357FD
FORD USA	2L1W4684AA

533419	
HYUNDAI	491302B000
HYUNDAI	491303W000
HYUNDAI	493002B500
HYUNDAI	49300D3000
MERCEDES-BENZ	2034110115
MERCEDES-BENZ	A2034110115
SSANGYONG	3320034000
SSANGYONG	3320034001

533420	
FORD	4393343
FORD	YC1W4684AA
JAGUAR	C2D1548
JAGUAR	C2D17797
JAGUAR	C2D17799
JAGUAR	C2D18116
JAGUAR	C2D18117
JAGUAR	C2D3122

533422	
BMW	26117522027

533422S	
BMW	26117522027

533878	
BMW	26117527392

Drive Line Part

Photo……

533882	
AUDI	1K0521307
AUDI	1K0521307A
AUDI	5Q0521307
SKODA	5Q0521101BJ

533882S	
AUDI	5Q0521307
VW	1K0521307
VW	1K0521307A

533884	
MERCEDES-BENZ	0004110600
MERCEDES-BENZ	0004110700
MERCEDES-BENZ	2094100215
MERCEDES-BENZ	2154100015
MERCEDES-BENZ	2214100415
MERCEDES-BENZ	2214110115
MERCEDES-BENZ	2224110215
MERCEDES-BENZ	2404100215

533884S	
MERCEDES-BENZ	0004110800
MERCEDES-BENZ	0004111000
MERCEDES-BENZ	2124100215
MERCEDES-BENZ	A0004110800
MERCEDES-BENZ	A0004111000
MERCEDES-BENZ	A2124100215

537625	
BMW	26107564398
BMW	26112226842
BMW	26117610372
GENERAL MOTORS	96RC100344
LAND ROVER	TIJ000012

537625S	
BMW	26117610372

537626	
AUDI	1J0521127
AUDI	1J0521127A
AUDI	5N0521101C
AUDI	5N0521101E
AUDI	5N0521101M
AUDI	5Q0521101BJ
VW	5Q0521127

537626S	
AUDI	1J0521127
AUDI	1J0521127A
VW	5Q0521127

537627	
MERCEDES-BENZ	2054110000
MERCEDES-BENZ	A2054110000

537627S	
MERCEDES-BENZ	2054110000
MERCEDES-BENZ	A2054110000

537630	
MERCEDES-BENZ	1724110500
MERCEDES-BENZ	A1724110500
MERCEDES-BENZ	A2054110100

537630S	
MERCEDES-BENZ	2054110100
MERCEDES-BENZ	A2054110100

Drive Line Part

Photo……

537631		537631S		537668		537668S	
BMW	26111227717	BMW	26111227717	BMW	26117546426	BMW	26117546426
BMW	26111229080	BMW	26111229080	MERCEDES-BENZ	5144110315		
BMW	26111229360	BMW	26111229360	MERCEDES-BENZ	A5144110315		

537669		537669S		537791S		537792S	
BMW	26117518443	BMW	26117518443	MERCEDES-BENZ	2024101615	MERCEDES-BENZ	0004111100
				MERCEDES-BENZ	2104101015	MERCEDES-BENZ	1644100015
				MERCEDES-BENZ	A2024101615	MERCEDES-BENZ	A0004111100
				MERCEDES-BENZ	A2104101015	MERCEDES-BENZ	A1644100015
				RENAULT	8200058705		

537793S		537794S		537796S		537797S	
MERCEDES-BENZ	2114100215	MERCEDES-BENZ	2114100415	MERCEDES-BENZ	2104100515	MERCEDES-BENZ	2034100315
MERCEDES-BENZ	A2114100215	MERCEDES-BENZ	A2114100415	MERCEDES-BENZ	A2104100515	MERCEDES-BENZ	A2034100315

Drive Line Part

Photo……

537798S	537818	537819S	537820S
BMW 26117503159	CHRYSLER 05157005AD CHRYSLER 05157005AE CHRYSLER 05157005AF MERCEDES-BENZ 1764100100 MERCEDES-BENZ 2464110015 MERCEDES-BENZ 2474104800 MERCEDES-BENZ A1764100100 MERCEDES-BENZ A2464110015	MERCEDES-BENZ 2104101515 MERCEDES-BENZ 2104101615 MERCEDES-BENZ A2104101515 MERCEDES-BENZ A2104101615	MERCEDES-BENZ 2024100715 MERCEDES-BENZ A2024100715

537821S	537832S	537843	537843S
MERCEDES-BENZ 2024100815 MERCEDES-BENZ A2024100815	MERCEDES-BENZ 0004110600 MERCEDES-BENZ 0004110700 MERCEDES-BENZ 2094100215 MERCEDES-BENZ 2154100015 MERCEDES-BENZ 2224110215 MERCEDES-BENZ 2304100015 MERCEDES-BENZ 2404100215 MERCEDES-BENZ 2404100415	MERCEDES-BENZ 2224100215 MERCEDES-BENZ 2404100115 MERCEDES-BENZ A2224100215 MERCEDES-BENZ A2404100115	MERCEDES-BENZ 2044100215 MERCEDES-BENZ A2044100215

537847	537848S	537849	537850S
MERCEDES-BENZ 2054101800 MERCEDES-BENZ A2054101800	MERCEDES-BENZ 2034100015 MERCEDES-BENZ A2034100015	BMW 26118487178	MERCEDES-BENZ 2024101515 MERCEDES-BENZ A2024101515

Drive Line Part

Photo……

537851	537851S	537853	537889S
MERCEDES-BENZ 2054110200 MERCEDES-BENZ A2054110200	MERCEDES-BENZ 2054110200 MERCEDES-BENZ A2054110200	AUDI 5QF521101R VW 701521127 VW 7D0521127	MERCEDES-BENZ 0004110100 MERCEDES-BENZ A0004110100

538111	538112S	538136	538137S
MERCEDES-BENZ 2104100315 MERCEDES-BENZ A2104100315	BMW 26117527392	MERCEDES-BENZ 2024100715 MERCEDES-BENZ A2024100715	MERCEDES-BENZ 1244100015 MERCEDES-BENZ 2014100615 MERCEDES-BENZ 2014101515 MERCEDES-BENZ 2014102015 MERCEDES-BENZ 2014102115 MERCEDES-BENZ 2024101215 MERCEDES-BENZ A1244100015 MERCEDES-BENZ A2014100615

538501	538501S	538502	538503
MERCEDES-BENZ 2224105500 MERCEDES-BENZ 2224110115 MERCEDES-BENZ A2224105500 MERCEDES-BENZ A2224110115	MERCEDES-BENZ 2224110115 MERCEDES-BENZ A2224110115	MERCEDES-BENZ 2054110015 MERCEDES-BENZ A2054110015	MERCEDES-BENZ 2174110300 MERCEDES-BENZ A2174110300

Drive Line Part

Photo……

538504S	538505	538505S	538506
SEAT 99642102050	MERCEDES-BENZ 0004110500 MERCEDES-BENZ 2114100715 MERCEDES-BENZ 2114110115 MERCEDES-BENZ A0004110500 MERCEDES-BENZ A2114100715 MERCEDES-BENZ A2114110115	MERCEDES-BENZ 0004110500 MERCEDES-BENZ 2114100715 MERCEDES-BENZ 2114110115 MERCEDES-BENZ A0004110500 MERCEDES-BENZ A2114100715 MERCEDES-BENZ A2114110115	MERCEDES-BENZ 2174110400 MERCEDES-BENZ A2174110400

538507	538508S	538509S	538510
AUDI 7M0521127A	AUDI 7M0521127A	MERCEDES-BENZ 2044100215 MERCEDES-BENZ 2124100215 MERCEDES-BENZ 2224100215 MERCEDES-BENZ A2044100215 MERCEDES-BENZ A2124100215 MERCEDES-BENZ A2224100215	MERCEDES-BENZ 2174110500 MERCEDES-BENZ A2174110500

538511	538512	538513	538513S
PORSCHE 99642102050 PORSCHE 99742102000 PORSCHE 99742102001	BMW 26112282573 BMW 26112284495	MERCEDES-BENZ 2034100815 MERCEDES-BENZ 2034110215 MERCEDES-BENZ A2034100815 MERCEDES-BENZ A2034110215	MERCEDES-BENZ 2034100815 MERCEDES-BENZ 2034110215 MERCEDES-BENZ A2034100815 MERCEDES-BENZ A2034110215

Drive Line Part

Photo……

538514S	
CHRYSLER	05127289AA
CHRYSLER	5127289AA
MERCEDES-BENZ	4154110015
MERCEDES-BENZ	A4154110015

538515	
VW	2E0521297
VW	2E0521297A
VW	2E0521913

538518	
AUDI	1J0521307C
AUDI	1J0521307D

538520S	
SEAT	7M3521403
SEAT	7M3521403A

538522S	
IVECO	042569356
IVECO	42569356

538612	
CHRYSLER	00K05127290AA
CHRYSLER	00K05142476AA
CHRYSLER	05127290AA
CHRYSLER	05142476AA
CHRYSLER	05161435AA
CHRYSLER	5127290AA
CHRYSLER	5142476AA
CHRYSLER	5161435AA

538614	
VW	7H3521102A

538615	
VW	7P0521102AE
VW	7P0521102AF
VW	7P0521102G
VW	7P0521102H
VW	7P0521102J
VW	7P0521102K
VW	7P0521102L
VW	7P0521102M

538616	
HYUNDAI	493002E000
HYUNDAI	493002E050

538617	
AUDI	1000008900022
AUDI	7L0521101A
AUDI	7L0521101B
AUDI	7L0521101D
AUDI	7L0521101F
AUDI	7L0521101G
AUDI	7L0521101H
PORSCHE	7L6521102B

538618	
VW	7H3521102A

538619	
MITSUBISHI	MB154199
MITSUBISHI	MB154706
MITSUBISHI	MR357998

Drive Line Part

Photo……

538620	538622	538623	538624
TOYOTA 3723026020	MERCEDES-BENZ 2054100402 MERCEDES-BENZ 2054107601 MERCEDES-BENZ 2054108101 MERCEDES-BENZ 2054108201 MERCEDES-BENZ 2054108301 MERCEDES-BENZ A2054100402 MERCEDES-BENZ A20541004021 MERCEDES-BENZ A2054107601	HYUNDAI 495752B000	HYUNDAI 495752P000

538625	538626	538627	538628
SSANGYONG 3320008000 SSANGYONG 3320008300	TOYOTA 3723035050 TOYOTA 3723035070	CHRYSLER 68031836AA MERCEDES-BENZ 5154107182 MERCEDES-BENZ 9064100101 MERCEDES-BENZ 9064100381 MERCEDES-BENZ 9064100581 MERCEDES-BENZ 9064100781 MERCEDES-BENZ 9064101081 MERCEDES-BENZ 9064101281	LAND ROVER LR037028 LAND ROVER TVB500370 LAND ROVER TVB500390

538630	538631	538632	538633
HYUNDAI 4913026000 HYUNDAI 491304A000 HYUNDAI 491304A400 MITSUBISHI MR165252 MITSUBISHI MR357998	LAND ROVER LR037027 LAND ROVER TVB500360	NISSAN 3752132G25 NISSAN 3752133G25 NISSAN 3752134G25 NISSAN 3752136G25 NISSAN 3752156G25 NISSAN 3752156G26 NISSAN 3752156G27 NISSAN 3752157G25	TOYOTA 3723009100

Drive Line Part

Photo……

538634	
TOYOTA	3723009090

538635	
MERCEDES-BENZ	9064100081
MERCEDES-BENZ	A9064100081

538637	
TOYOTA	3710042060
TOYOTA	3723020130
TOYOTA	3723029025

538638	
TOYOTA	372300K010
TOYOTA	372300K011
TOYOTA	372300K020
TOYOTA	372300K021

538639	
MERCEDES-BENZ	2034102081
MERCEDES-BENZ	A2034102081

538640	
BMW	26117589746
BMW	26118488056
BMW	26118613133
BMW	26118624483
BMW	26118837226
BMW	26128686120
BMW	7589746

538641	
ALFA ROMEO	10179037
ALFA ROMEO	808682

538642	
CHEVROLET	0446073
CHEVROLET	20781756
CHEVROLET	446073
CHEVROLET	4807201
CHEVROLET	96624771
CHEVROLET	96624772
OPEL	4813841

538643	
MAZDA	SA5125300

538644	
NISSAN	370001DB0E
NISSAN	37000BR51A
NISSAN	3752106R25
NISSAN	3752106R26
NISSAN	3752141L25
NISSAN	3752141L28
NISSAN	3752154C25
NISSAN	37521P0125

538645	
MITSUBISHI	MN171429
MITSUBISHI	MR223119

538646	
BMW	26127629466

Drive Line Part

Photo……

538647	
BMW	26127521855

538648	
FORD	1810012
FORD	1948706
FORD	2459508
FORD	4060617
FORD	4060617S1
FORD	4104708
FORD	6635542
FORD	7239265

538649	
MERCEDES-BENZ	6394100481
MERCEDES-BENZ	A6394100481

538651	
BMW	26122282496
BMW	26127501258
BMW	26127506783

538652	
FORD	02G409335A
FORD	1094821
FORD	7222317
FORD	96BG3C08E1A

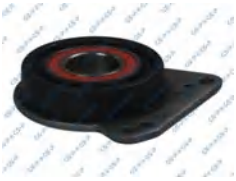

538653	
BMW	26121229492
BMW	26122282495
BMW	26127501257

538655	
BMW	26118858476
BMW	26127564695

538656	
BMW	26127564694
BMW	26128858475

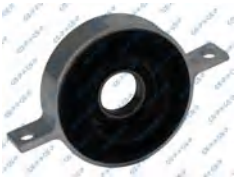

538657	
MERCEDES-BENZ	6394100681
MERCEDES-BENZ	A6394100681

538658	
AUDI	5N0521101C

538659	
MITSUBISHI	3450A017
MITSUBISHI	MR580647

538660	
EVOBUS	0004110212
EVOBUS	9704110012
EVOBUS	A0004110212
EVOBUS	A9704110012

Drive Line Part

Photo……

538661	
BMW	26121226731
BMW	26121229089
BMW	26121229683

538662	
BMW	26121229726
BMW	26127507740

538663	
BMW	26127521856

538664	
BMW	26127526632
BMW	26128615622

538665	
BMW	26121229317
BMW	26121229682

538666	
MERCEDES-BENZ	2024100281
MERCEDES-BENZ	2024100481
MERCEDES-BENZ	A2024100281
MERCEDES-BENZ	A2024100481

538667	
MERCEDES-BENZ	2104101681
MERCEDES-BENZ	2104101981
MERCEDES-BENZ	2104102181
MERCEDES-BENZ	2104103481
MERCEDES-BENZ	2114100081
MERCEDES-BENZ	2114100181
MERCEDES-BENZ	2114100281
MERCEDES-BENZ	2114100381

538668	
MERCEDES-BENZ	2044100981
MERCEDES-BENZ	2044101081
MERCEDES-BENZ	2044101181
MERCEDES-BENZ	2044101281
MERCEDES-BENZ	2044101381
MERCEDES-BENZ	2044101581
MERCEDES-BENZ	A2044100981
MERCEDES-BENZ	A2044101081

538669	
MERCEDES-BENZ	2024100381
MERCEDES-BENZ	2024100381S
MERCEDES-BENZ	2024100581
MERCEDES-BENZ	2024100581S
MERCEDES-BENZ	2024100581S1
MERCEDES-BENZ	A2024100381
MERCEDES-BENZ	A2024100381S
MERCEDES-BENZ	A2024100581

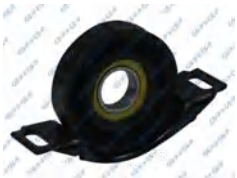

538670	
VW	7H0407181
VW	7H0407181B

538671	
BMW	26121227997
BMW	26121229431
LAND ROVER	TOQ000050
LAND ROVER	XH424650AA

538672	
BMW	26107564398
BMW	26127526631
BMW	26127597883
BMW	26128615621

Drive Line Part

Photo……

538673	
BMW	26103413996

538677	
BMW	26112225620
BMW	26121225774
BMW	26121226415
BMW	26121226723

538678	
DAF	1288220
DAF	1323765
DAF	1435557
DAF	1779697

538679	
BMW	26121229242

538680S	
DODGE	68031836AA
DODGE	68088733AA

538681S	
MERCEDES-BENZ	6394100481
MERCEDES-BENZ	A6394100481

538682S	
LEXUS	3710042080
TOYOTA	3710042090

538683S	
INFINITI	37000JD000
INFINITI	3752106R25
INFINITI	375216P026
NISSAN	3752106R26
NISSAN	3752141L25
NISSAN	3752141L28
NISSAN	3752154C25
NISSAN	37521Q0125

538684S	
MAZDA	SA5125300

538685S	
HYUNDAI	493002P100
HYUNDAI	495752P000

538686S	
HYUNDAI	493002E000
HYUNDAI	495752E000

538687S	
HYUNDAI	495752B000

Drive Line Part

Photo……

538688S	
MERCEDES-BENZ	5154100382
MERCEDES-BENZ	6394100681
MERCEDES-BENZ	6394100981
MERCEDES-BENZ	A5154100382
MERCEDES-BENZ	A6394100681
MERCEDES-BENZ	A6394100981

538689S	
LEXUS	3723059015

538690S	
CITROËN	280191
MITSUBISHI	3401A022

538691S	
FORD	1510905
FORD	1824066
FORD	8C114826AA
FORD	8C114826AB

538692S	
NISSAN	3752133G25
NISSAN	3752156G25
NISSAN	3752156G26
NISSAN	C752156G27

538693S	
MERCEDES-BENZ	5154106882
MERCEDES-BENZ	5154107282
MERCEDES-BENZ	9064100081
MERCEDES-BENZ	9064100181
MERCEDES-BENZ	9064100281
MERCEDES-BENZ	9064100281SK
MERCEDES-BENZ	9064100681
MERCEDES-BENZ	9064100681SK

538694S	
PORSCHE	95542102010
PORSCHE	95542102011
PORSCHE	95542102012
PORSCHE	95542102013
PORSCHE	95542102014
PORSCHE	95542102015
PORSCHE	95542102023
PORSCHE	95542102024

538695S	
AUDI	5N0521101C
AUDI	5N0521101E
AUDI	5N0521101EX
AUDI	5N0521101M
AUDI	5N0521101MX

538696S	
FORD	1454605
FORD	5031497
FORD	5223453
MAZDA	SA6825300
MAZDA	SA6825300A

538697S	
LAND ROVER	TOQ000010
LAND ROVER	TOQ000040
LAND ROVER	TOQ100010

538974	
MERCEDES-BENZ	2224101081
MERCEDES-BENZ	A2224101081

538977	
TOYOTA	3723022140
TOYOTA	3723024010

Drive Line Part

Photo……

538978S	538979	538980	538989
MERCEDES-BENZ 6014100410 MERCEDES-BENZ 6014101510 MERCEDES-BENZ 6014101710 MERCEDES-BENZ 6014102110 MERCEDES-BENZ 6014105010 MERCEDES-BENZ 6015860041 MERCEDES-BENZ A6014100410 MERCEDES-BENZ A6014101510	SUBARU 27031FC001	CHEVROLET 92143761	AUDI 4M0521101

538995S	538997	538998	539001
MERCEDES-BENZ 05104574AA MERCEDES-BENZ 2D0598351A MERCEDES-BENZ 5104574AA MERCEDES-BENZ 9014100310 MERCEDES-BENZ 9014110415 MERCEDES-BENZ 9034100010 MERCEDES-BENZ A05104574AA MERCEDES-BENZ A2D0598351A	MERCEDES-BENZ 1244100181 MERCEDES-BENZ 1244100181S MERCEDES-BENZ 1244100681 MERCEDES-BENZ 1244100681S MERCEDES-BENZ A1244100181 MERCEDES-BENZ A1244100681	MERCEDES-BENZ 1244100281 MERCEDES-BENZ 1244100281S MERCEDES-BENZ 1244100781 MERCEDES-BENZ 1244100781S MERCEDES-BENZ A1244100281 MERCEDES-BENZ A1244100781	MERCEDES-BENZ 1294101181 MERCEDES-BENZ 1404100181 MERCEDES-BENZ 1404100781 MERCEDES-BENZ A1294101181 MERCEDES-BENZ A1404100181 MERCEDES-BENZ A1404100781

539002S	539004	539005	539007
MERCEDES-BENZ 1634100010 MERCEDES-BENZ A1634100010	MERCEDES-BENZ 2104101281 MERCEDES-BENZ 2104101881 MERCEDES-BENZ A2104101281 MERCEDES-BENZ A2104101881	MERCEDES-BENZ 2214102581 MERCEDES-BENZ 2214105081 MERCEDES-BENZ A2214102581 MERCEDES-BENZ A2214105081	SUBARU 27111AG220

Drive Line Part

Photo……

539008	539009	539010	539011
SUBARU 27111SA011	MERCEDES-BENZ 2D0598351A MERCEDES-BENZ 9014110312 MERCEDES-BENZ 9014110412 MERCEDES-BENZ 9014110415 MERCEDES-BENZ A9014110312 MERCEDES-BENZ A9014110412 MERCEDES-BENZ A9014110415 VW 2D0521351	TOYOTA 3710087402 TOYOTA 3710087403	TOYOTA 372300K030 TOYOTA 372300K040 TOYOTA 3723034010 TOYOTA 3723035120

539012	539013	539014	539015
TOYOTA 372300K050	TOYOTA 3723012120 TOYOTA 3723012170	TOYOTA 3723019015	TOYOTA 3723022190

539016	539017	539018	539019
TOYOTA 3723026010	TOYOTA 3723028010	TOYOTA 3723029015	TOYOTA 3723030152

Drive Line Part

Photo……

539020	539022	539023	539024
LEXUS 3723030170	TOYOTA 3723035060 TOYOTA 3723035061 TOYOTA 3723035080	TOYOTA 3723035100	TOYOTA 3723035090

539025	539026	539027	539028
TOYOTA 3723035130	TOYOTA 3723036061 TOYOTA 3723036062 TOYOTA 3723036063	TOYOTA 3723036020 TOYOTA 3723036081 TOYOTA 3723036H00	TOYOTA 3723039035

539029	539030	539031S	539032
TOYOTA 3723042010	DAIHATSU 37230BZ010	DACIA 397740385R RENAULT 3752100Q0B	HONDA 40100S2H003 HONDA 40100S4N003

Drive Line Part

Photo……

539033	
HONDA	40100S9AE01
HONDA	40100S9AJ01

539034	
HONDA	40100S10A01
HONDA	40520S10003
HONDA	40520S9A003

539036	
IVECO	042535254
IVECO	42535254
IVECO	42554407
IVECO	42561251

539037	
IRISBUS	042538439
IRISBUS	093156460
IVECO	0042538439
IVECO	0093156460
IVECO	42538439
IVECO	93156460
IVECO	93157025

539038	
FORD	6649122
FORD	6649122S2
FORD	92VB4826BB

539039	
ALFA ROMEO	7541164
FIAT	46407936

539040	
FORD	7A2Z4A499A

539043	
ISUZU	8943288000

539044	
ISUZU	8979428770
ISUZU	8979462530

539045	
KIA	AD08950501

539047	
MAZDA	KG0325109U

539048	
MAZDA	KG0325109U

Drive Line Part

Photo……

539049	539050	539051	539052
MITSUBISHI MB000815	MITSUBISHI MB154080	MITSUBISHI MB505495 MITSUBISHI MB837388	MITSUBISHI MR553202

539053	539054	539056	539057
MITSUBISHI MR953919	MITSUBISHI MR953922	MAZDA P03025310A MAZDA P03025310C	MAZDA P04725310

539058	539059	539061	539062
MAZDA PH0125100	MAZDA PH0125100B	BMW 26127599802	MERCEDES-BENZ 6014101210 MERCEDES-BENZ A6014101210

Drive Line Part

Photo……

539063	539064S	539065	539066S
TOYOTA 3723039045	TOYOTA 3723039045	MITSUBISHI 3401A022	LEXUS 3723039095

539067	539068S	539070	539071
TOYOTA 3723048010 TOYOTA 3723049015	LEXUS 3723048010 LEXUS 3723049015 TOYOTA 3723059035	FORD 5031497 FORD 6M344826BB	LEXUS 3723059015

539077	539078S	539079	539080
MITSUBISHI MR196669	NISSAN 375215C525	BMW 26121226442 BMW 26121226657	HONDA 40520SR7J01

Drive Line Part

Photo……

539900	
VW	2H0521102AG
VW	2H0521102AJ
VW	2H0521102AN
VW	2H0521102AT
VW	2H0521102F
VW	2H0521102K
VW	2H0521102P
VW	2H0598351B

539903	
AUDI	7L8521102C
AUDI	7L8521102D
AUDI	7L8521102F
AUDI	7L8521102G
AUDI	7L8521102L
AUDI	7L8521102M

539904	
BMW	26127605099

539905	
BMW	26127588544

539906	
LAND ROVER	6G9N7L190FD
LAND ROVER	LR001157
LAND ROVER	LR006959

539907S	
MITSUBISHI	3401A574

539908S	
SUBARU	27111AJ111
SUBARU	27111SC030
SUBARU	27111SC031

539909S	
TOYOTA	3723009010

539910S	
DACIA	3752000Q0A
DACIA	375252191R
OPEL	4421159
OPEL	4421161
OPEL	4502881
OPEL	93168920
OPEL	95521570

539913	
FORD	5216389
FORD	CV614K145AD

539914	
AUDI	4F0521101B
AUDI	4F0521101F

539915	
AUDI	4G0521101
AUDI	4G0521101A
AUDI	4G0521101C
AUDI	4G0521101E
AUDI	4G0521101F
AUDI	4G0521101G
AUDI	4G0521101K
AUDI	4G0521101L

Drive Line Part

Photo……

539916S	539917S	539918	539919
MERCEDES-BENZ 6394100581 MERCEDES-BENZ A6394100581	AUDI 1K0521101D AUDI 1K0521349	MERCEDES-BENZ 1644103102 MERCEDES-BENZ A1644103102	JAGUAR HK834365EB JAGUAR HK834365EC JAGUAR T4A1868 JAGUAR T4A50209
			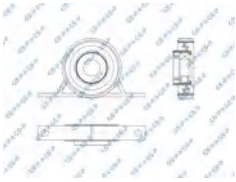

539920S	539921	539922	539923
VW 7E0598349	BMW 26127558745	VOLVO 31492434 VOLVO 32249788	AUDI 4F0521101E
		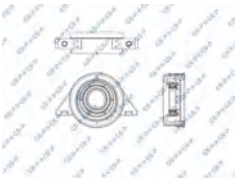	

539924S	539925S	539927	539928S
IVECO 042569357 IVECO 42569357	MERCEDES-BENZ 9074106201 MERCEDES-BENZ A9074106201	MERCEDES-BENZ 2044103381 MERCEDES-BENZ A2044103381	VW 7E0598349B VW 7E0598349F

Drive Line Part

Photo……

539929	539930	539931S	539940
PORSCHE 95B521101R	AUDI 5Q0521101BJ	AUDI 7L8521102C AUDI 7L8521102G AUDI 7L8521102L	TOYOTA 3710042080

539943	539943S	539944S	539945S
CHEVROLET 88951975	CADILLAC 368010 CHEVROLET 88951975	CADILLAC 22819507	NISSAN 3752133P29

539946S	539948	601297	601384
VW 7P0521102M VW 7P0521102P VW 7P0521102R VW 7P6598575	HYUNDAI 491004H000 HYUNDAI 491004H150	PORSCHE 95542102015	LAND ROVER FTC5428 LAND ROVER TVB000090

Drive Line Part

Photo……

601570	
FORD	1L2Z4A376AB
FORD	6L2Z4A376B
FORD	XL2Z4A376AA
FORD	ZZR025100

601681	
FORD	8R294K145AA

601771	
MERCEDES-BENZ	4634100106
MERCEDES-BENZ	A4634100106

601910	
LAND ROVER	LR082562
LAND ROVER	TVB500510
LAND ROVER	TVB500520

602001	
ALFA ROMEO	700611

602051	
VOLVO	31492145
VOLVO	LR023283
VOLVO	LR031394
VW	7E1521102M

602071	
JAGUAR	T4A1868

602077	
MERCEDES-BENZ	6393370110
MERCEDES-BENZ	6393370210
MERCEDES-BENZ	9064104401
MERCEDES-BENZ	A6393370110
MERCEDES-BENZ	A6393370210
MERCEDES-BENZ	A9064104401

602148	
VOLVO	30713272
VOLVO	31216175

602448	
TOYOTA	3711042040

602455	
VOLVO	31492977
VOLVO	32249788

602469	
AUDI	4G0521101K
AUDI	4M0521101
AUDI	8K0521101AA

Drive Line Part

Photo……

602478	602494	602495	605057
AUDI 7L8521102F VW 7H1521102A	LAND ROVER TVB000450	LAND ROVER TVB000450	BMW 26111229082 BMW 26111229095 BMW 26111229522 BMW 26117503103 BMW 26117504667 BMW 26117526822

605093	605119	605122	605129
RENAULT 8200058705	MERCEDES-BENZ 1764100100 MERCEDES-BENZ A1764100100	AUDI 7L8521102S	AUDI 4F0521101E

605140	605143	605147	605158
DODGE 52853642AD	DODGE 52853641AD	VW 7E1521102M	VW 7L6521101A

Drive Line Part

Photo……

605161	
SUZUKI	2710167J00

605168	
MERCEDES-BENZ	1664105900
MERCEDES-BENZ	A1664105900

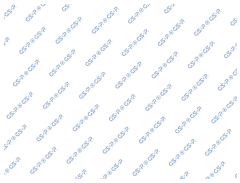

605200	
BMW	26111227781
BMW	26111229093
BMW	26117501639

605202	
SUZUKI	2710167J01

606026	
BUICK	12562646

608072	
CHEVROLET	15114531

608073	
CHEVROLET	15114530
CHEVROLET	25833034
CHEVROLET	25833035

616005	
JEEP	52111591AB
JEEP	52111596AB
JEEP	52111597AA
JEEP	52853299AB

616011	
CHEVROLET	52098379
CHEVROLET	52098501
CHEVROLET	52098850
CHEVROLET	52099246
CHEVROLET	52099260

618001	
FORD	72GG4635BA
FORD	92333203200
HOLDEN	153120188003

630003	
BMW	26117548392
BMW	26117585922

635008	
VOLVO	30713272

Drive Line Part

Photo……

635045

HYUNDAI	49010H1141
KIA	15922549
KIA	15922550
KIA	491003E070
KIA	491003E150

635046

CHEVROLET	10395274
CHEVROLET	15296383
CHEVROLET	22729203
CHEVROLET	3AMW3B413AE

635047

FORD	2L8Z4R602AA
FORD	2L8Z4R602DA
FORD	7L8Z4R602A
FORD	7L8Z4R602B
FORD	7M6Z4R602A
VW	5L844K145BA

635056

BMW	26111227139
BMW	26111227779
BMW	26111229077
BMW	26111229081
BMW	26111229097
BMW	26111229099
BMW	26111229524

635064

FIAT	55193595
FIAT	55197051
FIAT	55222107
FIAT	55264146
FIAT	552641461
FIAT	552641462

661093

AUDI	8R0521101B
AUDI	8R0521101J
AUDI	8R0521101P
AUDI	8R0521101Q
PORSCHE	95B521101C

661094

AUDI	7L0521101H
AUDI	7L6521101M
AUDI	7L6521101Q
VW	7H3521102A
VW	7L6521101N

661100

FORD	1L2Z4A376AA
FORD	K4A376AFR
FORD	XL2Z4A37
FORD	XL2Z4A376AA

699050

VOLVO	3202921

699117

CHEVROLET	26035527

699195

VOLVO	30614441
VOLVO	31216176

699196

TOYOTA	3711012670

Drive Line Part

Photo……

699199	
DODGE	52853364AC
DODGE	52853364AD
DODGE	52853364AE
DODGE	52853364AF
DODGE	52853365AC
DODGE	52853365AD
DODGE	52853365AE
DODGE	52853365AF

699217	
LAND ROVER	LR037027
LAND ROVER	TVB500360

699219	
MERCEDES-BENZ	1644100501
MERCEDES-BENZ	1644100701
MERCEDES-BENZ	1644103102
MERCEDES-BENZ	A1644100501
MERCEDES-BENZ	A1644100701
MERCEDES-BENZ	A1644103102

699229	
JEEP	52123624AB

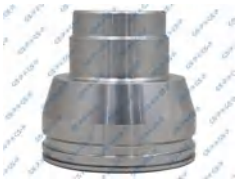

699239	
VOLVO	25775163

699240	
FORD	9R3Z4R602A

699253	
MERCEDES-BENZ	1634100101
MERCEDES-BENZ	1634100201
MERCEDES-BENZ	1634100301
MERCEDES-BENZ	1634100901
MERCEDES-BENZ	A1634100101
MERCEDES-BENZ	A1634100201
MERCEDES-BENZ	A1634100301
MERCEDES-BENZ	A1634100901

699257	
MITSUBISHI	MB661414
MITSUBISHI	MN147054

699273	
HUMMER	15860584
HUMMER	25859867

699274	
CHEVROLET	15188059
GENERAL MOTORS	15038488
GENERAL MOTORS	15762970
GENERAL MOTORS	26032451
GENERAL MOTORS	94717722

801298	
NISSAN	2710082Z80
NISSAN	370004W015
NISSAN	37000ZZ71A
NISSAN	37300EA105
NISSAN	37300EA115
NISSAN	37300ZL81A
NISSAN	37300ZL82A
NISSAN	37300ZP90A

801302	
MITSUBISHI	MR232977
MITSUBISHI	MR232987
MITSUBISHI	MR580646

Drive Line Part

Photo……

801331	
FORD	AL3Z4A376D

801349	
CHRYSLER	52105990AA
CHRYSLER	52123021AA
CHRYSLER	52123021AB

802100	
JEEP	52853431AA
JEEP	52853432AA

802210	
CHRYSLER	52123673AC
CHRYSLER	52123673AD
JEEP	52123612AA
JEEP	52123612AB
JEEP	52123612AC
JEEP	52123612AD
JEEP	52123612AE
JEEP	68242641AA

802217	
AUDI	7L8521102S

802222	
BMW	26107589128

804534	
AUDI	7L8521102S

804544	
MITSUBISHI	MR518285
MITSUBISHI	MR580388

808078	
JEEP	52105990AB
JEEP	52123021AC

816010	
CHRYSLER	52099497
CHRYSLER	52105728AB
CHRYSLER	52105728AC
CHRYSLER	52105728AE
CHRYSLER	52105758AB
CHRYSLER	52105758AE
JEEP	52099498AB
JEEP	52099498AD

816011	
JEEP	52123553AA
JEEP	52853330AA
JEEP	52853330AB
JEEP	52853330AC
JEEP	528533FRK
JEEP	68022104AA
JEEP	68022104AB

835056	
FORD	9R3Z4R602A

Drive Line Part

Photo……

835068	
CHRYSLER	52123673AC
CHRYSLER	52123673AD
JEEP	52123612AA
JEEP	52123612AB
JEEP	52123612AC
JEEP	52123612AD
JEEP	52123612AE
JEEP	52123612AF

899032	
JEEP	52098208
JEEP	52099422
JEEP	52099497AC
JEEP	52099497AD
JEEP	52099497AE
JEEP	52099499AD
JEEP	52099499AG
JEEP	52111591AA

899297	
JEEP	52105728AD
JEEP	52105758AD
JEEP	P52853431AA
JEEP	P52853432AA

PS900002	
CADILLAC	15212140
CADILLAC	15212141
CADILLAC	25714852
CADILLAC	25755452
CADILLAC	25764274
CADILLAC	25768518

PS900100	
ACURA	40100STXA02
ACURA	40100STXA52

PS900101	
ACURA	40100TX4A01
ACURA	40100TX4A02
ACURA	40100TX4A03
ACURA	40100TX4A04

PS900102	
AUDI	1K0521101D
AUDI	1K0521101G
AUDI	1K0521101K
AUDI	1K0521101N
VW	1K0521101B
VW	1K0521101C
VW	1K0521101H
VW	1K0521101L

PS900103	
AUDI	8K0521101AA
AUDI	8K0521101G
AUDI	8K0521101N

PS900104	
AUDI	4B0521106A
AUDI	4B0521106D

PS900105	
AUDI	4F0521101B
AUDI	4F0521101F

PS900106	
AUDI	4H4521101B
AUDI	4H4521101D
AUDI	4H4521101F
AUDI	4H4521101H
AUDI	4H4521101R

PS900107	
AUDI	8R0521101B

Drive Line Part

Photo……

PS900108	
AUDI	8R0521101F
AUDI	8R0521101L
AUDI	8R0521101M
AUDI	8R0521101Q

PS900109	
AUDI	7L8521102D
AUDI	7L8521102F
AUDI	7L8521102M

PS900110	
AUDI	7L8521102S
AUDI	7L8521105G
AUDI	7L8521105L

PS900111	
AUDI	7L8521101C

PS900112	
BMW	26207632650
BMW	26208626955
BMW	26209425910

PS900113	
BMW	26111229565

PS900114	
BMW	26111229557
BMW	26117523925

PS900115	
BMW	26111229564

PS900116	
BMW	26117506840
BMW	26117510840
BMW	26117519303

PS900117	
BMW	26107527355
BMW	26107551199

PS900118	
BMW	26107531307
BMW	26107565103

PS900119	
BMW	26107574678
BMW	26107614396

Drive Line Part

Photo……

PS900120	
BMW	26107558504
BMW	26107614433

PS900121	
BMW	26111229569

PS900122	
BMW	20207525969
BMW	26207502968
BMW	26207525969
BMW	26207526677

PS900123	
BMW	26107527376
BMW	26107573482

PS900124	
BMW	26207529294
BMW	26207620520
BMW	26207629987
BMW	26208628042
BMW	26209488491

PS900125	
BMW	26107527333

PS900126	
BMW	26107632653

PS900127	
BMW	26107522030
BMW	26107557161
BMW	26107573574
BMW	7522030

PS900128	
BMW	26207534636
BMW	26209488490

PS900129	
BMW	26107542120
BMW	26107557158
BMW	26107573493

PS900130	
BMW	26107557145
BMW	26107576478

PS900131	
BMW	26107506968
BMW	26107513770

Drive Line Part

Photo……

PS900132		PS900133		PS900135		PS900136	
BMW	26107561808	BMW	26107588577	BMW	26107639214	BMW	26107632628
BMW	26107573528			BMW	26108648854		
				BMW	26108693404		

PS900137		PS900138		PS900139		PS900140	
BMW	26112284490	BMW	26207593164	BMW	26208678680	BMW	26107523625
		BMW	26207620521	BMW	26208698362	BMW	26107555711
		BMW	26207629988				
		BMW	26208628043				
		BMW	26209425906				

PS900141		PS900142		PS900143		PS900144	
BMW	26107614685	BMW	26107513531	BMW	26104473980	BMW	26104471914
BMW	7614685			BMW	26107526496	BMW	26107526500
				BMW	26107527627	BMW	26107527626
						BMW	26107530431

Drive Line Part

Photo……

PS900145	PS900147	PS900148	PS900149
BMW 26107520454 BMW 26107527624	BMW 26107614653 BMW 26117562810	BMW 26107615017	BMW 26201229606 BMW 26207508629

PS900150	PS900151	PS900152	PS900153
BMW 26207524371	BMW 26107529661 BMW 26107549305	BMW 26107524364 BMW 26107549298	BMW 26203401609

PS900154	PS900155	PS900156	PS900157
BMW 26103402136	BMW 26207556019	BMW 26107564736	BMW 26107564740

Drive Line Part

Photo……

PS900158	
BMW	26207556020
BMW	7556020

PS900159	
BMW	26207597649
BMW	26208605866
BMW	26209425907
BMW	7597649

PS900160	
BMW	26107589128

PS900161	
BMW	26207589985
BMW	26208605867
BMW	26209425909
BMW	7589985
BMW	8605867

PS900162	
BMW	26107614755

PS900163	
BMW	26103402134

PS900164	
BMW	26107589801

PS900165	
BMW	26107564396

PS900166	
BMW	26107564398

PS900167	
BMW	26107564394

PS900168	
BMW	26107589129

PS900169	
BMW	26107606103
BMW	26107614436

Drive Line Part

Photo……

PS900170	
BMW	26107572935
BMW	26107614435

PS900171	
BUICK	23212621
BUICK	23212622
BUICK	84023107
BUICK	84305159

PS900172	
CHEVROLET	20953605
CHEVROLET	22834245
CHEVROLET	23167530
CHEVROLET	86793346

PS900173	
BUICK	15885332
BUICK	25815077
BUICK	25995544
BUICK	25995545

PS900174	
CHEVROLET	22788958
CHEVROLET	22947024
CHEVROLET	42529901
CHEVROLET	42761523
OPEL	0446077
OPEL	446078

PS900175	
GENERAL MOTORS	20762242
GENERAL MOTORS	84150924

PS900176	
CADILLAC	25773497

PS900178	
CADILLAC	25771590

PS900179	
CADILLAC	15210790
CADILLAC	15210791

PS900180	
CADILLAC	20870868
CADILLAC	20896295
CADILLAC	20927516
CADILLAC	20930099
CADILLAC	20979553
CADILLAC	22822140
CADILLAC	22885388

PS900182	
CHEVROLET	20781756
CHEVROLET	96624771
OPEL	0446073

PS900184	
CHEVROLET	20824104
CHEVROLET	20824105
CHEVROLET	20992595
CHEVROLET	20992596
CHEVROLET	23168668
CHEVROLET	23168670
CHEVROLET	23481373
CHEVROLET	23481375

Drive Line Part

Photo……

PS900185	
GENERAL MOTORS	26038124
GENERAL MOTORS	26057959

PS900186	
GENERAL MOTORS	15602698
GENERAL MOTORS	15622336
GENERAL MOTORS	26008264
GENERAL MOTORS	26022466
GENERAL MOTORS	7848497

PS900187	
CADILLAC	12479001
GENERAL MOTORS	15746360
GENERAL MOTORS	26055995

PS900188	
GENERAL MOTORS	15113797
GENERAL MOTORS	15152342
GENERAL MOTORS	25833034
ISUZU	8151137970
ISUZU	8151523420
ISUZU	8258330340

PS900190	
CHEVROLET	10395274
CHEVROLET	15296383
CHEVROLET	19152721
CHEVROLET	19259831
CHEVROLET	22729203

PS900191	
CHEVROLET	15801608
CHEVROLET	19328628
CHEVROLET	19355361
CHEVROLET	20811303
CHEVROLET	25793000
CHEVROLET	25918054

PS900193	
DODGE	04593542AB

PS900194	
CHRYSLER	52853018AC
DODGE	52853018AB
DODGE	52853018AD
DODGE	52853018AE
DODGE	52853018AF

PS900195	
DAIHATSU	3711087Z24
DAIHATSU	3711087Z24000
DAIHATSU	615339
DAIHATSU	6153390001

PS900196	
DAIHATSU	3711087Z19000
DAIHATSU	3711087Z19A
DAIHATSU	615338
DAIHATSU	6153380001

PS900197	
DAIHATSU	263585
DAIHATSU	565333
DAIHATSU	615340

PS900198	
DAIHATSU	264286
DAIHATSU	565341
DAIHATSU	615341

Drive Line Part

Photo……

PS900199	
DAIHATSU	3711087D04000
DAIHATSU	3711087Z06000
DAIHATSU	3711087Z22A

PS900200	
DODGE	52853021AA

PS900201	
CHRYSLER	52853099AA

PS900202	
DODGE	52123199AA
DODGE	52123199AB

PS900203	
CHRYSLER	52099204AB
DODGE	52105982AA
DODGE	52105982AB

PS900204	
CHRYSLER	52105934AA
DODGE	52105934AB
DODGE	52105934AC
DODGE	52105934AD
DODGE	52105934AE
DODGE	52105934AF
DODGE	52123112AA
DODGE	52123326AA

PS900206	
DODGE	52105926AA

PS900208	
DODGE	52853314AA

PS900209	
DODGE	52123639AA

PS900210	
CHRYSLER	52123021AD
CHRYSLER	52123021AE

PS900211	
DODGE	52105871AB

PS900212	
DODGE	52853142AA
DODGE	52853142AB
DODGE	52853143AA
DODGE	52853143AB
DODGE	52853143AC
DODGE	52853143AE

Drive Line Part

Photo……

PS900215

CHRYSLER	52123110AC
CHRYSLER	52123202AA
CHRYSLER	52123202AC
CHRYSLER	52123202AE
DODGE	52105930AA
DODGE	52105930AB
DODGE	52105930AC
DODGE	52105930AD

PS900216

DODGE	5146803AA
DODGE	5146803AB

PS900218

CHRYSLER	52853038AC
DODGE	52123197AA
DODGE	52123197AB
DODGE	52853038AB

PS900220

DODGE	52105982AC

PS900221

DODGE	52105981AC

PS900222

FIAT	46349688
FIAT	55193595
FIAT	55197051
FIAT	55222107
FIAT	55264146

PS900223

FORD	F2G34K145CB
FORD	F2G34K145CC
FORD	F2GZ4R602A
FORD	F2GZ4R602D

PS900224

FORD	9T434K145AA
FORD	9T4Z4R602A
FORD	BT434K145AA
FORD	BT4Z4R602A
FORD	DT434K145AA
FORD	DT4Z4R602A

PS900225

FORD	CV6Z4R602A
FORD	CV6Z4R602B
FORD	EJ7Z4R602B
FORD	EJ7Z4R602D

PS900229

FORD	F81A4602CTC

PS900230

FORD	5C3Z4A376AA
FORD	5C3Z4A376EA
FORD	5C3Z4A376G
FORD	9C3Z4A376C
FORD	F81Z4A376KA
FORD	YC3Z4A376CA

PS900234

FORD	92VB4K357AC
FORD	92VT4K357A1C
FORD	95VT4K357A2B

Drive Line Part

Photo……

PS900235	
FORD	7C194K357HB

PS900236	
FORD	7T4Z4R602A

PS900237	
FORD	F75Z4A376BB

PS900239	
FORD	BL3Z4A376A
FORD	BL3Z4A376B

PS900240	
FORD	8G1Z4R602A
FORD	8G1Z4R602B
FORD	FG1Z4R602A

PS900241	
FORD	7E5Z4R602A
FORD	7E5Z4R602B
FORD	8E5Z4R602A
FORD	AE5Z4R602A

PS900244	
FORD	5F9Z4R602AA
FORD	6F9Z4R602A
FORD	7F9Z4R602A

PS900245	
FORD	F77Z4A376CB
FORD	XL2Z4A376BA
FORD	XL2Z4A376BB

PS900249	
HONDA	06400T0A305
HONDA	40100T0AA01
HONDA	40100T0AA02

PS900250	
HONDA	40100S9AE01
HONDA	40100S9AJ01
HONDA	40100SCAA01

PS900251	
HONDA	40100S10003
HONDA	40100S10A01

PS900252	
HONDA	40100SWAA01
HONDA	40100SWYE01
HONDA	40100SWYE02
HONDA	40100SXSA01

Drive Line Part

Photo……

PS900254		PS900255		PS900256		PS900258	
HONDA	40100SCWA01	HONDA	40100S3VA21	HONDA	40100SZAA01	GENERAL MOTORS	15207223
HONDA	40100SCWA02	HONDA	40100S3VA22	HONDA	40100SZAA02		
HONDA	40100SCWA03						

PS900260		PS900264		PS900265		PS900266	
HYUNDAI	491004H000	HYUNDAI	4930026003	HYUNDAI	493001U000	HYUNDAI	493002B850
		HYUNDAI	4930026103				

PS900267		PS900268		PS900269		PS900271	
HYUNDAI	493004Z030	HYUNDAI	493002B950	HYUNDAI	493002B500	HYUNDAI	493002S000

Drive Line Part

Photo……

PS900272	
HYUNDAI	493003W000

PS900273	
HYUNDAI	493002E000
HYUNDAI	493002E050

PS900274	
INFINITI	37200CG100
INFINITI	37200CL70A

PS900275	
INFINITI	372001CA1A

PS900276	
JEEP	53003248
JEEP	53005040
JEEP	53005542
JEEP	53005542AC

PS900279	
GENERAL MOTORS	52098863
GENERAL MOTORS	52098864
GENERAL MOTORS	52098865
GENERAL MOTORS	52099396
JEEP	52098379

PS900280	
JEEP	05019616AA
JEEP	52853500AA
JEEP	52853500AB

PS900281	
CHRYSLER	52123627AA
CHRYSLER	52123627AB
JEEP	52123624AA
JEEP	52123624AB
JEEP	52123627AC

PS900284	
JEEP	68206211AA
JEEP	68206211AB
JEEP	68206211AC

PS900291	
JEEP	53003235
JEEP	53005541
JEEP	53005541AB

PS900292	
JEEP	53003236
JEEP	53005039
JEEP	53005543
JEEP	53005543AC

PS900298	
JEEP	52098784AB
JEEP	52098784AC
JEEP	52098784AD

Drive Line Part

Photo……

PS900299	
CHRYSLER	52098787AB
JEEP	52098787AC
JEEP	52098787AD

PS900300	
CHRYSLER	52853402AA
CHRYSLER	52853402AB
JEEP	52853402AD

PS900301	
JEEP	52098377AB
JEEP	52098377AD
JEEP	52098377AE
JEEP	52098377AF

PS900302	
JEEP	52098783AB
JEEP	52098783AC

PS900303	
JEEP	05273310AA
JEEP	05273310AB
JEEP	5273310AA
JEEP	5273310AB
JEEP	K05273310AA
JEEP	K05273310AB

PS900306	
KIA	491003E951

PS900308	
KIA	493002P500

PS900309	
KIA	491003E110

PS900310	
KIA	491003E150

PS900311	
KIA	491003E050

PS900312	
HYUNDAI	491003E200

PS900313	
LAND ROVER	BR1846
LAND ROVER	FRC5566
LAND ROVER	FRC8390

Drive Line Part

Photo……

PS900314	PS900315	PS900316	PS900318
LAND ROVER FRC8392	LAND ROVER FRC8393	LAND ROVER FRC8391 LAND ROVER FTC3245	LAND ROVER FRC8389

PS900319	PS900320	PS900321	PS900324
LAND ROVER TVB000330	LAND ROVER TVB000140 LAND ROVER TVB100380	LAND ROVER FTC5320 LAND ROVER TVB000100 LAND ROVER TVB000110 LAND ROVER TVB000220 LAND ROVER TVB000320 LAND ROVER TVB000320K LAND ROVER TVB100370	LAND ROVER 5H224365AA LAND ROVER 7H223214AA LAND ROVER 7H223219AA LAND ROVER TVB500160 LAND ROVER TVB500510

PS900325	PS900326	PS900327	PS900328
LAND ROVER 5H224365BA LAND ROVER 5H224365BB LAND ROVER LR037027 LAND ROVER LR037027R LAND ROVER TVB500270 LAND ROVER TVB500360 LAND ROVER TVB500360R	LAND ROVER FRC8386 LAND ROVER TVB100610	LAND ROVER FRC8387	LAND ROVER FTC4140 LAND ROVER TVB000050 LAND ROVER TVB000130

Drive Line Part

Photo……

PS900329	PS900330	PS900331	PS900332
LAND ROVER FTC4141	LAND ROVER FTC5428 LAND ROVER TVB000090	LAND ROVER FTC5430 LAND ROVER TVB000190	LAND ROVER 6G9N7L190FD LAND ROVER 9G9N7L190CA LAND ROVER 9H527L190AA LAND ROVER BH527L190AA LAND ROVER LR001157 LAND ROVER LR006959 LAND ROVER LR007804 LAND ROVER LR021553

PS900333	PS900334	PS900335	PS900336
LAND ROVER 6H424365AA LAND ROVER 7H423219AA LAND ROVER TVB000040 LAND ROVER TVB500040 LAND ROVER TVB500520	LAND ROVER 1H4Z4K331AA LAND ROVER 3H424365AA LAND ROVER TVB000370 LAND ROVER TVB500290	LAND ROVER 6H424365BA LAND ROVER 6H424365CA LAND ROVER 6H424365CB LAND ROVER BH424365AA LAND ROVER BH424365AB LAND ROVER LR022574 LAND ROVER LR030049 LAND ROVER TVB500250	LAND ROVER AH527L190AA LAND ROVER BJ327L190AB LAND ROVER EJ327L190CD LAND ROVER EJ327L190CE LAND ROVER LR021552 LAND ROVER LR024750 LAND ROVER LR031394 LAND ROVER LR049820

PS900337	PS900338	PS900339	PS900340
FORD 5H324365AB LAND ROVER 5H224365CA LAND ROVER 5H324365AA LAND ROVER LR037028 LAND ROVER TVB500370 LAND ROVER TVB500390	LAND ROVER 3H423219AA LAND ROVER LR007035 LAND ROVER LR008102	LAND ROVER TVB000450 LAND ROVER XH424235CA	LEXUS 3710048010

Drive Line Part

Photo……

PS900342	PS900345	PS900346	PS900347
MAZDA M09125100 MAZDA M09125100A	MERCEDES-BENZ 1664100101 MERCEDES-BENZ 1664100501 MERCEDES-BENZ 1664102601 MERCEDES-BENZ 166410260180 MERCEDES-BENZ 1664103001 MERCEDES-BENZ 1664108700 MERCEDES-BENZ 1664109100 MERCEDES-BENZ A1664100101	MERCEDES-BENZ 2034106106 MERCEDES-BENZ A2034106106	MERCEDES-BENZ 1764100100 MERCEDES-BENZ 1764100200 MERCEDES-BENZ 2464100000 MERCEDES-BENZ A1764100100 MERCEDES-BENZ A1764100200 MERCEDES-BENZ A2464100000

PS900348	PS900349	PS900350	PS900351
MERCEDES-BENZ 2104103716 MERCEDES-BENZ 2104104316 MERCEDES-BENZ 2104104806 MERCEDES-BENZ A2104103716 MERCEDES-BENZ A2104104316 MERCEDES-BENZ A2104104806	MERCEDES-BENZ 2104107106 MERCEDES-BENZ A2104107106	MERCEDES-BENZ 2114106306 MERCEDES-BENZ A2114106306	MERCEDES-BENZ 2204107106 MERCEDES-BENZ A2204107106

PS900352	PS900353	PS900354	PS900355
MERCEDES-BENZ 1634100201 MERCEDES-BENZ 163410020139 MERCEDES-BENZ A1634100201 MERCEDES-BENZ A163410020139	MERCEDES-BENZ 1634100101 MERCEDES-BENZ 163410010139 MERCEDES-BENZ A1634100101 MERCEDES-BENZ A163410010139	MERCEDES-BENZ 1634100301 MERCEDES-BENZ 163410030139 MERCEDES-BENZ A1634100301 MERCEDES-BENZ A163410030139	MERCEDES-BENZ 1634100901 MERCEDES-BENZ 163410090139 MERCEDES-BENZ A1634100901 MERCEDES-BENZ A163410090139

Drive Line Part

Photo……

PS900356	PS900357	PS900359	PS900363
MERCEDES-BENZ 2044100000 MERCEDES-BENZ A2044100000	MERCEDES-BENZ 2044107001 MERCEDES-BENZ 204410700180 MERCEDES-BENZ 2214103401 MERCEDES-BENZ A2044107001 MERCEDES-BENZ A204410700180 MERCEDES-BENZ A2214103401	MERCEDES-BENZ 2044101801 MERCEDES-BENZ 2044102601 MERCEDES-BENZ 2044106701 MERCEDES-BENZ 204410670180 MERCEDES-BENZ 2044106801 MERCEDES-BENZ 2214101701 MERCEDES-BENZ A2044101801 MERCEDES-BENZ A2044102601	MERCEDES-BENZ 1644101402 MERCEDES-BENZ 1644103102 MERCEDES-BENZ 164410310280 MERCEDES-BENZ A1644101402 MERCEDES-BENZ A1644103102 MERCEDES-BENZ A164410310280

PS900364	PS900365	PS900366	PS900367
MERCEDES-BENZ 2204101701 MERCEDES-BENZ 2204107006 MERCEDES-BENZ A2204101701 MERCEDES-BENZ A2204107006	MERCEDES-BENZ 9064100001 MERCEDES-BENZ 9064101501 MERCEDES-BENZ 9064102201 MERCEDES-BENZ 906410220180 MERCEDES-BENZ A9064100001 MERCEDES-BENZ A9064101501 MERCEDES-BENZ A9064102201 MERCEDES-BENZ A906410220180	MERCEDES-BENZ 9034100201 MERCEDES-BENZ 9034100801 MERCEDES-BENZ A9034100201 MERCEDES-BENZ A9034100801 VW 2D0521107H	MERCEDES-BENZ 9064100016 MERCEDES-BENZ A9064100016 VW 2E0521293

PS900368	PS900369	PS900370	PS900372
MERCEDES-BENZ 2E0521101A MERCEDES-BENZ 2E0521101AL MERCEDES-BENZ 9064100106 MERCEDES-BENZ 9064102016 MERCEDES-BENZ 9064102116 MERCEDES-BENZ 906410211680 MERCEDES-BENZ 9064104406 MERCEDES-BENZ A2E0521101A	DODGE 68006622AA DODGE 68055987AA MERCEDES-BENZ 9064100806 MERCEDES-BENZ 9064109606 MERCEDES-BENZ 906410960680 MERCEDES-BENZ 906410960687 MERCEDES-BENZ A9064100806 MERCEDES-BENZ A9064109606	MERCEDES-BENZ 9064103616 MERCEDES-BENZ 906410361680 MERCEDES-BENZ A9064103616 MERCEDES-BENZ A906410361680 VW 2E0521101CB	MERCEDES-BENZ 9014104806 MERCEDES-BENZ A9014104806

Drive Line Part

Photo……

PS900373	PS900376	PS900377	PS900378
MERCEDES-BENZ 9014101217 MERCEDES-BENZ 9014102406 MERCEDES-BENZ 9014107406 MERCEDES-BENZ 901410740680 MERCEDES-BENZ A9014101217 MERCEDES-BENZ A9014102406 MERCEDES-BENZ A9014107406 MERCEDES-BENZ A901410740680	MERCEDES-BENZ 6394103006 MERCEDES-BENZ 639410300680 MERCEDES-BENZ A6394103006 MERCEDES-BENZ A639410300680	MERCEDES-BENZ 6394103106 MERCEDES-BENZ 639410310680 MERCEDES-BENZ A6394103106 MERCEDES-BENZ A639410310680	MERCEDES-BENZ 6394103206 MERCEDES-BENZ 639410320680 MERCEDES-BENZ A6394103206 MERCEDES-BENZ A639410320680

PS900379	PS900380	PS900381	PS900382
MERCEDES-BENZ 6394103306 MERCEDES-BENZ A6394103306	MERCEDES-BENZ 6394103406 MERCEDES-BENZ 639410340680 MERCEDES-BENZ A6394103406 MERCEDES-BENZ A639410340680	MERCEDES-BENZ 6394103506 MERCEDES-BENZ A6394103506	MERCEDES-BENZ 6394103606 MERCEDES-BENZ A6394103606

PS900383	PS900384	PS900385	PS900386
MERCEDES-BENZ 6394103706 MERCEDES-BENZ A6394103706	MERCEDES-BENZ 6394103906 MERCEDES-BENZ A6394103906	MERCEDES-BENZ 6394104006 MERCEDES-BENZ 6394104506 MERCEDES-BENZ A6394104006 MERCEDES-BENZ A6394104506	MERCEDES-BENZ 6394104606 MERCEDES-BENZ A6394104606

Drive Line Part

Photo……

PS900387	PS900388	PS900389	PS900390
MERCEDES-BENZ 6394104706 MERCEDES-BENZ A6394104706	MERCEDES-BENZ 6394104806 MERCEDES-BENZ A6394102516 MERCEDES-BENZ A6394104806	MERCEDES-BENZ 6394104906 MERCEDES-BENZ A6394104906	MERCEDES-BENZ 6394101916 MERCEDES-BENZ 6394107006 MERCEDES-BENZ 639410700680 MERCEDES-BENZ A6394101916 MERCEDES-BENZ A6394107006 MERCEDES-BENZ A639410700680

PS900391	PS900392	PS900393	PS900397
MERCEDES-BENZ 6394102116 MERCEDES-BENZ 6394107206 MERCEDES-BENZ A6394102116 MERCEDES-BENZ A6394107206	MERCEDES-BENZ 6394103516 MERCEDES-BENZ A6394103516	MERCEDES-BENZ 6394103416 MERCEDES-BENZ A6394103416 MERCEDES-BENZ A639410341680	MITSUBISHI MR388691

PS900399	PS900400	PS900401	PS900402
MITSUBISHI 3401A448 MITSUBISHI MN168569	MITSUBISHI MN147054	MITSUBISHI 3401A022	MITSUBISHI MR410558 MITSUBISHI MR518285 MITSUBISHI MR580388

Drive Line Part

Photo……

PS900410	PS900411	PS900413	PS900414
MITSUBISHI MB154224	MITSUBISHI MB505727	MITSUBISHI MB661086	MITSUBISHI MB661084

PS900417	PS900418	PS900419	PS900420
MITSUBISHI MR232133	MITSUBISHI 3401A018	MITSUBISHI 3401A019	MITSUBISHI MR453515 MITSUBISHI MR580390

PS900421	PS900431	PS900432	PS900433
MITSUBISHI MR410559 MITSUBISHI MR453516 MITSUBISHI MR580389	MITSUBISHI MR553798 MITSUBISHI MR980151	MITSUBISHI MR953726	NISSAN 37000CB000 NISSAN 37000CB00A

Drive Line Part

Photo……

PS900434	
NISSAN	372005X30A
NISSAN	37200DY235
NISSAN	37200EB300
NISSAN	37200EB30A

PS900435	
NISSAN	37300EA510
NISSAN	37300ZL91A
NISSAN	37300ZP81A

PS900436	
NISSAN	372000W700
NISSAN	372002X800

PS900437	
NISSAN	37000JM100
NISSAN	37000JM13A
NISSAN	37000JM14A
NISSAN	37100JM10A

PS900438	
NISSAN	370004BA1A
NISSAN	370004BA2A

PS900439	
NISSAN	370007C001
NISSAN	370008C801
NISSAN	370009C001

PS900441	
NISSAN	370007C002
NISSAN	370008C802
NISSAN	370009C002

PS900442	
NISSAN	370007C003
NISSAN	370009C504

PS900445	
NISSAN	370001DA0B
NISSAN	370001DB0E
NISSAN	37000BR50A
NISSAN	37000BR50B
NISSAN	37000BR52A
NISSAN	37000JD200
NISSAN	37000JG00A

PS900446	
NISSAN	370001DA0D
NISSAN	370001DF0B
NISSAN	370001DF0D
NISSAN	370003UD3B

PS900447	
NISSAN	370008H310
NISSAN	370008H510
NISSAN	370008H800

PS900450	
PORSCHE	97042101152
PORSCHE	97042101153
PORSCHE	97042101154

Drive Line Part

Photo……

PS900451	
RENAULT	320006394R
RENAULT	8200144401
RENAULT	8200149811

PS900453	
RENAULT	7711135221
RENAULT	7711135224
RENAULT	8200058705

PS900454	
SATURN	19328626
SATURN	19355359
SATURN	20811301
SATURN	25792998
SATURN	25918055
SATURN	B3700040013

PS900455	
SATURN	10384280
SATURN	15815627
SATURN	19259832
SATURN	25804507

PS900456	
SATURN	10383959
SATURN	15232537
SATURN	15811671
SATURN	22713657
SATURN	25775163

PS900457	
SATURN	10383960
SATURN	12575199
SATURN	12576371
SATURN	15814987
SATURN	22731741
SATURN	25804506

PS900458	
SSANGYONG	3310009001

PS900459	
SSANGYONG	3310009502

PS900460	
SUBARU	27111SC020
SUBARU	27111SC021

PS900461	
SUBARU	27111FJ060
SUBARU	27111FJ061
SUBARU	27111FJ080
SUBARU	27111FJ081

PS900462	
SUBARU	27111SC070
SUBARU	27111SC071

PS900463	
SUBARU	27111AG11A
SUBARU	27111AG15A

Drive Line Part

Photo……

PS900464	
SUBARU	27111AJ110
SUBARU	27111AJ111
SUBARU	27111AJ112

PS900465	
SUZUKI	2710061M00
SUZUKI	2710066M00

PS900466	
TOYOTA	3714060380

PS900467	
TOYOTA	371106A440

PS900468	
TOYOTA	3714035190
TOYOTA	3714060540

PS900469	
TOYOTA	3711035A90
TOYOTA	371106A520

PS900470	
TOYOTA	3714087401
TOYOTA	3714087403
TOYOTA	3714087404
TOYOTA	37140B4020

PS900472	
TOYOTA	371400K010

PS900476	
TOYOTA	3710048030

PS900477	
TOYOTA	3710048050

PS900478	
TOYOTA	3714034020
TOYOTA	3714035070
TOYOTA	3714035071

PS900479	
TOYOTA	371400K030

Drive Line Part

Photo……

PS900480	PS900481	PS900482	PS900483
TOYOTA 3714035030 TOYOTA 3714035060	TOYOTA 371000K030	TOYOTA 371000K040	TOYOTA 3711035250

PS900484	PS900485	PS900486	PS900487
TOYOTA 3711035580	TOYOTA 371106A250	TOYOTA 3711060380 TOYOTA 3711060530	TOYOTA 371106A260

PS900489	PS900490	PS900492	PS900493
TOYOTA 3714060280	TOYOTA 3714060350	TOYOTA 3710042060	TOYOTA 371000R010 TOYOTA 3710042090

Drive Line Part

Photo……

PS900496	
TOYOTA	3710045010

PS900497	
TOYOTA	3710045020

PS900498	
TOYOTA	3714004050
TOYOTA	3714004051
TOYOTA	3714004052
TOYOTA	3714004053

PS900499	
TOYOTA	3710004340
TOYOTA	3710004341
TOYOTA	3710004342
TOYOTA	3710004343

PS900500	
TOYOTA	371400C060
TOYOTA	371400C061

PS900501	
TOYOTA	371400C070
TOYOTA	371400C071
TOYOTA	371400C072

PS900502	
TOYOTA	3710033030

PS900503	
TOYOTA	3710048020

PS900504	
VOLVO	9183941

PS900505	
VOLVO	31325356

PS900506	
VOLVO	30713371
VOLVO	30759214
VOLVO	8689915
VOLVO	P30713371

PS900507	
VOLVO	30681235
VOLVO	30711838
VOLVO	31256272

Drive Line Part

Photo……

PS900508	
VOLVO	30713372
VOLVO	31256270
VOLVO	8689916

PS900509	
VOLVO	30735022
VOLVO	30759971

PS900510	
VOLVO	9480702

PS900511	
VOLVO	31256001

PS900512	
VOLVO	30735566
VOLVO	30783365
VOLVO	30787839

PS900513	
VOLVO	30651997
VOLVO	31259593
VOLVO	31367625

PS900514	
VOLVO	30614432
VOLVO	30735027
VOLVO	8636926
VOLVO	8689885
VOLVO	P30735027

PS900515	
VOLVO	31302006

PS900516	
VOLVO	31325194
VOLVO	31367159
VOLVO	31367461
VOLVO	31367784
VOLVO	31367840
VOLVO	31437418
VOLVO	31437462
VOLVO	31437462AB

PS900517	
VOLVO	31437119
VOLVO	31437586
VOLVO	31492479
VOLVO	32249781

PS900519	
VW	5ND521101
VW	5ND521101A
VW (SVW)	5N7521101

PS900520	
VW	5N0521101
VW	5N0521101A
VW	5N0521101C
VW	5N0521101E
VW	5N0521101EX
VW	5N0521101J
VW	5N0521101M
VW	5N0521101MX

Drive Line Part

Photo……

PS900522

PORSCHE	95842101000
PORSCHE	95842101001
PORSCHE	95842101002
PORSCHE	95842101003
PORSCHE	95842101004
PORSCHE	95842101010
PORSCHE	95842101011
VW	7P0521101E

PS900523

PORSCHE	95842101120
PORSCHE	95842101121
PORSCHE	95842101122
PORSCHE	95842101123
VW	7P0521102G
VW	7P0521102J
VW	7P0521102L
VW	7P0521102N

PS900525

AUDI	7L0521101H
AUDI	7L6521101M
AUDI	7L6521101Q
PORSCHE	95542102000
PORSCHE	95542102001
PORSCHE	95542102002
PORSCHE	95542102003
PORSCHE	95542102004

PS900526

VW	7L6521101
VW	7L6521101A
VW	7L6521101C
VW	7L6521101E
VW	7L6521101G
VW	7L6521101L
VW	7L6521101N

PS900527

PORSCHE	95542102010
PORSCHE	95542102011
PORSCHE	95542102012
PORSCHE	95542102013
PORSCHE	95542102014
PORSCHE	95542102015
PORSCHE	95542102020
PORSCHE	95542102021

PS900528

VW	7L6521102B
VW	7L6521102C
VW	7L6521102D
VW	7L6521102E
VW	7L6521102F
VW	7L6521102H
VW	7L6521102N
VW	7L6521102Q

PS900530

LAND ROVER	DPLA3219AA
LAND ROVER	LR034513
LAND ROVER	LR057620
LAND ROVER	LR082562

PS900536

LAND ROVER	LR034508
LAND ROVER	LR058371
LAND ROVER	LR071994

PS900537

LAND ROVER	LR041960
LAND ROVER	LR058372
LAND ROVER	LR072500

PS900543

CHEVROLET	15165400
CHEVROLET	15711960
CHEVROLET	15746002
CHEVROLET	15751438

PS900544

MERCEDES-BENZ	1634100702
MERCEDES-BENZ	A1634100702

PS900548

MERCEDES-BENZ	2534103301
MERCEDES-BENZ	253410330180
MERCEDES-BENZ	A2534103301
MERCEDES-BENZ	A253410330180

Drive Line Part

Photo……

PS900549

DODGE	05104083AA
MERCEDES-BENZ	9014103301
MERCEDES-BENZ	A9014103301

PS900550

MERCEDES-BENZ	9064105806
MERCEDES-BENZ	906410580680
MERCEDES-BENZ	A9064105806
MERCEDES-BENZ	A906410580680
VW	2E0521101BB

PS900551

TOYOTA	3710042080

PS900552

AUDI	8R0521101E
AUDI	8R0521101K
AUDI	8R0521101P

PS900557

DACIA	320003602R
DACIA	320003744R
DACIA	320007974R
DACIA	370002820R
DACIA	8200945335

PS900558

DODGE	68047594AA
MERCEDES-BENZ	9064102716
MERCEDES-BENZ	9064107916
MERCEDES-BENZ	906410791680
MERCEDES-BENZ	A9064102716
MERCEDES-BENZ	A9064107916
MERCEDES-BENZ	A906410791680
VW	2E0521101E

PS900559

MERCEDES-BENZ	9064102616
MERCEDES-BENZ	9064107816
MERCEDES-BENZ	906410781680
MERCEDES-BENZ	A9064102616
MERCEDES-BENZ	A9064107816
MERCEDES-BENZ	A906410781680
VW	2E0521163T
VW	2E0521293M

PS900560

PORSCHE	97042101132
PORSCHE	97042101133

PS900561

KIA	491003E100

PS900562

NISSAN	370003UC3A
NISSAN	37000BR51A
NISSAN	37000EB52A
NISSAN	37000JD000
NISSAN	37000JG70A
NISSAN	37000JG70B

PS900563

NISSAN	373003X31A
NISSAN	373003X31B
NISSAN	373003X33A
NISSAN	373003X33B
NISSAN	373003X33C
NISSAN	373005X30A
NISSAN	37300EA300
NISSAN	37300EB406

PS900564

NISSAN	373004JA0B

Drive Line Part

Photo……

PS900565	
TOYOTA	3710042050

PS900566	
PORSCHE	97042101102
PORSCHE	97042101104

PS900567	
MERCEDES-BENZ	6394108406
MERCEDES-BENZ	A6394108406

PS900568	
MERCEDES-BENZ	9014101101
MERCEDES-BENZ	9014102401
MERCEDES-BENZ	A9014101101
MERCEDES-BENZ	A9014102401
VW	2D0521107F

PS900569	
VW	7H3521102A

PS900570	
VW	7H1521102A

PS900571	
MERCEDES-BENZ	2054100402
MERCEDES-BENZ	A2054100402

PS900572	
AUDI	4FD521101A
AUDI	4FD521101B

PS900573	
AUDI	2H0521102AG
AUDI	2H0521102AJ
AUDI	2H0521102AN
AUDI	2H0521102AT
AUDI	2H0521102F
AUDI	2H0521102K
AUDI	2H0521102P
VW	2H6521102D

PS900576	
FORD	1L2Z4A376AA
FORD	1L2Z4A376AB

PS900577	
FORD	F77A4A376BB
FORD	XL2A4A376AA
FORD	XL2Z4A376AA
FORD	ZZR025100

PS900580	
FORD	8R294K145AA

Drive Line Part

Photo……

PS900581

AUDI	4G0521101
AUDI	4G0521101B
AUDI	4G0521101C
AUDI	4G0521101D
AUDI	4G0521101F
AUDI	4G0521101K

PS900582

MITSUBISHI	3401B041

PS900583

FORD	1447190
FORD	5042330
FORD	5064477
FORD	5223453
FORD	6M344602CB
FORD	6M344602CC
FORD	6M344602CD
FORD	6M344602CE

PS900584

AUDI	5Q0521101AR
AUDI	5Q0521101AS
AUDI	5Q0521101BH

PS900585

AUDI	5Q0521101AG
AUDI	5Q0521101AJ
AUDI	5Q0521101AT
AUDI	5Q0521101BA
AUDI	5Q0521101BJ
VW	5Q0521101AB

PS900586

MERCEDES-BENZ	1664100601
MERCEDES-BENZ	1664102401
MERCEDES-BENZ	A1664100601
MERCEDES-BENZ	A1664102401

PS900589

TOYOTA	3711042040

PS900590

AUDI	8R0521101D
AUDI	8R0521101J
AUDI	8R0521101N

PS900591

PORSCHE	95B521101
PORSCHE	95B521101C
PORSCHE	95B521101N
PORSCHE	95B521101R

PS900592

JAGUAR	HK834365EB
JAGUAR	T4A1868
LAND ROVER	LR092694
LAND ROVER	LR180088

PS900593

MERCEDES-BENZ	2534101201
MERCEDES-BENZ	253410120180
MERCEDES-BENZ	A2534101201

PS900594

NISSAN	37000EB30C

Drive Line Part

Photo……

PS900595	
AUDI	4M0521101
AUDI	4M0521101AM
AUDI	4M0521101CN
AUDI	4M0521101Q

PS900596	
JAGUAR	HK833219BC
JAGUAR	T4A3283
LAND ROVER	LR092700

PS900598	
KIA	491003E300

PS900599	
KIA	491003E420

PS900600	
KIA	491003E320

PS900601	
KIA	491003E330

PS900603	
KIA	491003E910

PS900604	
KIA	491003E900

PS900605	
KIA	491003E000

PS900606	
MERCEDES-BENZ	1664102901
MERCEDES-BENZ	166410290180
MERCEDES-BENZ	1664109000
MERCEDES-BENZ	A1664102901
MERCEDES-BENZ	A1664109000

PS900607	
MERCEDES-BENZ	2514100601
MERCEDES-BENZ	2514100701
MERCEDES-BENZ	A2514100601
MERCEDES-BENZ	A2514100701

PS900608	
SUZUKI	2710166J01

Drive Line Part

Photo……

PS900609	
MERCEDES-BENZ	9064102001
MERCEDES-BENZ	906410200180
MERCEDES-BENZ	A9064102001
MERCEDES-BENZ	A906410200180
VW	2E0521099

PS900610	
BMW	26107567953

PS900611	
BMW	26107645651

PS900612	
MAZDA	MF0425100
MAZDA	MF0425100A
MAZDA	PF3825100

PS900613	
BMW	26107565290
BMW	26107614380

PS900614	
VW	2H0521101A
VW	2H0521101B
VW	2H0521101C
VW	2H0521101E
VW	2H0521101H

PS900615	
FORD	1817807
FORD	1909735
FORD	2035122
FORD	2363388
FORD	2385718
FORD	2459508
FORD	BK314K357CA
FORD	BK314K357CB

PS900616	
FORD	1755400
FORD	1809807
FORD	2001258
FORD	8C164K357DG
FORD	CC114K357DC
FORD	CC114K357DD

PS900617	
FORD	1737404
FORD	1755402
FORD	1814845
FORD	1900839
FORD	1948706
FORD	8C164K357FF
FORD	8C164K357FG
FORD	CC114K357FB

PS900618	
AUDI	4F0521101E
VW	4F0521101

PS900619	
VOLVO	31492145
VOLVO	32249774
VOLVO	32339131

PS900620	
MITSUBISHI	3401A081
MITSUBISHI	3401A918

Drive Line Part

Photo……

PS900621	
VOLVO	31492434
VOLVO	32249788

PS900622	
MERCEDES-BENZ	1664103900
MERCEDES-BENZ	1664105606
MERCEDES-BENZ	1664105900
MERCEDES-BENZ	A1664105900

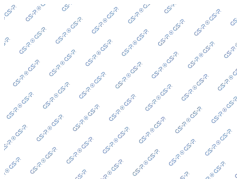

PS900623	
FIAT	0055249184
FIAT	0055267431
FIAT	00552674310
FIAT	0055267432
FIAT	00552758480
FIAT	0055283215
FIAT	46351492
FIAT	55249184

PS900624	
VOLVO	31437446
VOLVO	31492977
VOLVO	32249688
VOLVO	32249946

PS900625	
PORSCHE	95842101100
PORSCHE	95842101101
PORSCHE	95842101102
PORSCHE	95842101103
PORSCHE	95842101130
PORSCHE	95842101131
PORSCHE	95842101132
PORSCHE	958521102B

PS900627	
BMW	26108608536
BMW	26108651301

PS900628	
VOLVO	31492144
VOLVO	32249773
VOLVO	32339130

PS900629	
MAZDA	MF0625100
MAZDA	MF0625100A

PS900630	
BMW	26101229720
BMW	26107503101
BMW	26107510001

PS900631	
MERCEDES-BENZ	9064104801
MERCEDES-BENZ	A9064104801
VW	2E0521099H

PS900632	
MERCEDES-BENZ	9064105401
MERCEDES-BENZ	A9064105401
VW	2E0521292E

PS900633	
MITSUBISHI	3401A209

Drive Line Part

Photo……

PS900634	
VAG	5QF521101R

PS900635	
TOYOTA	3710026550

PS901341	
FORD	1734067
FORD	1899710
FORD	2129099
FORD	2350872
FORD	5287175
FORD	AB394K145DD
FORD	AB394K145DE
FORD	EB3G4K145EA

PS901342	
FORD	1734069
FORD	1899709
FORD	2129098
FORD	2350870
FORD	2450123
FORD	2518021
FORD	5287174
FORD	AB394K145CD

PS901343	
FORD	1720534
FORD	1723636
FORD	1736197
FORD	1899712
FORD	2071475
FORD	2350874
FORD	5287176
FORD	AB394K145EB

PS901344	
TOYOTA	371400K060
TOYOTA	371400K060A
TOYOTA	371400K061
TOYOTA	371400K062

PS901346	
RENAULT	320004317R
RENAULT	370002393R
RENAULT	370005068R
RENAULT	370007622R
RENAULT	370009267R
RENAULT	37000JY00A
RENAULT	37000JY00B
RENAULT	37000JY00C

PS901347	
TOYOTA	371000K260
TOYOTA	371000K260A
TOYOTA	371000K261
TOYOTA	371000K262
TOYOTA	371000K263

PS901348	
AUDI	2H0521102AF
AUDI	2H0521102AP
AUDI	2H0521102AS
AUDI	2H0521102D
AUDI	2H0521102H
AUDI	2H0521102N
AUDI	2H0521102S
AUDI	2H6521102C

PS901350	
VW	7E1521102E
VW	7E1521102J
VW	7E1521102L
VW	7E1521102M

PS901351	
JEEP	52853010AB
JEEP	52853010AC
JEEP	52853010AD
JEEP	52853417AA
JEEP	52853417AB
JEEP	52853417AC
JEEP	52853417AD
JEEP	52853464AA

PS901352	
JEEP	52099499
JEEP	52099499AD
JEEP	52099499AF
JEEP	52099499AG
JEEP	RL099499AG
JEEP	RX099499AG

Drive Line Part

Photo……

PS901354	
TOYOTA	371400K040

PS901355	
LDV	C00048057

PS901356	
LDV	C00048058

PS901357	
FORD	1715103
FORD	1728111
FORD	2162639
FORD	5313445
FORD	5349060
FORD	AB394A376AB
FORD	AB394A376AC
FORD	AB394A376AD

PS901358	
MERCEDES-BENZ	6394108506
MERCEDES-BENZ	639410850680
MERCEDES-BENZ	A6394108506
MERCEDES-BENZ	A639410850680

PS901359	
FORD	1749842
FORD	3C114K357FC
FORD	4743299
FORD	AC114K357DA
FORD	AC114K357DB

PS901360	
VW	7L8521102T
VW	7L8521105A
VW	7L8521105F
VW	7L8521105J

PS901361	
VW	2K0521101B
VW	2K0521101C
VW	2K0521101E
VW	2K0521101H
VW	2K0521101M
VW	2K0521101Q

PS901362	
AUDI	2E0521101F
AUDI	2E0521101S
AUDI	2E0521293B
MERCEDES-BENZ	9064100316
MERCEDES-BENZ	906410031680
MERCEDES-BENZ	9064101206
MERCEDES-BENZ	9064101906
MERCEDES-BENZ	9064109906

PS901363	
MERCEDES-BENZ	9064106606
MERCEDES-BENZ	9064106616
MERCEDES-BENZ	906410661680
MERCEDES-BENZ	A9064106606
MERCEDES-BENZ	A9064106616
MERCEDES-BENZ	A906410661680
VW	2A0521163C
VW	2E0521163AD

PS901364	
AUDI	2E0521101AT
MERCEDES-BENZ	9064105606
MERCEDES-BENZ	906410560680
MERCEDES-BENZ	A9064105606
MERCEDES-BENZ	A906410560680

PS901365	
AUDI	2E0521101AR
MERCEDES-BENZ	9064105406
MERCEDES-BENZ	906410540680
MERCEDES-BENZ	A9064105406
MERCEDES-BENZ	A906410540680

Drive Line Part

Photo……

PS901366	
MERCEDES-BENZ	9064100516
MERCEDES-BENZ	906410051680
MERCEDES-BENZ	906410051687
MERCEDES-BENZ	9064102106
MERCEDES-BENZ	A9064100516
MERCEDES-BENZ	A906410051680
MERCEDES-BENZ	A906410051687
MERCEDES-BENZ	A9064102106

PS901367	
AUDI	2E0521101
MERCEDES-BENZ	9064100006
MERCEDES-BENZ	9064109306
MERCEDES-BENZ	906410930680
MERCEDES-BENZ	A9064100006
MERCEDES-BENZ	A9064109306
MERCEDES-BENZ	A906410930680
VW	2E0521293AE

PS901368	
AUDI	2E0521101BE
AUDI	2E0521293A
CHRYSLER	68006638AA
CHRYSLER	68138113AA
MERCEDES-BENZ	9064100216
MERCEDES-BENZ	9064101406
MERCEDES-BENZ	9064101606
MERCEDES-BENZ	9064104316

PS901369	
AUDI	2E0521101J
CHRYSLER	68006637AA
CHRYSLER	68056138AA
CHRYSLER	68138114AA
MERCEDES-BENZ	9064100906
MERCEDES-BENZ	9064107416
MERCEDES-BENZ	906410741680
MERCEDES-BENZ	906410741687

PS901370	
AUDI	2E0521101AQ
MERCEDES-BENZ	9064105306
MERCEDES-BENZ	906410530680
MERCEDES-BENZ	A9064105306
MERCEDES-BENZ	A906410530680

PS901371	
AUDI	4GD521101A
AUDI	4GD521101B
AUDI	4GD521101C

PS901372	
AUDI	8KD521101B
AUDI	8KD521101D
AUDI	8KD521101E

PS901373	
VW	7E3521102G

PS901375	
VW	7H0521101

PS901376	
TOYOTA	3714060410

PS901377	
MERCEDES-BENZ	2D0521107N
MERCEDES-BENZ	9014100901
MERCEDES-BENZ	9014102601
MERCEDES-BENZ	901410260180
MERCEDES-BENZ	A2D0521107N
MERCEDES-BENZ	A9014100901
MERCEDES-BENZ	A9014102601
MERCEDES-BENZ	A901410260180

PS901378	
DODGE	52853642AC
DODGE	52853642AD
DODGE	52853642AE
DODGE	52853642AF

Drive Line Part

Photo……

PS901379	
CHRYSLER	52853641AD
DODGE	52853641AC
DODGE	52853641AE
JEEP	52123993AA
JEEP	52123993AB
JEEP	52123993AC
JEEP	52853641AF

PS901381	
FORD	BC3Z4A376A

PS901382	
BMW	26107577059

PS901383	
BMW	26107615398

PS901384	
BMW	26107632630
BMW	26108693401

PS901385	
BMW	26107565565
BMW	26107573587
BMW	7565565
BMW	7573587

PS901386	
BMW	26107563118
BMW	26107629415

PS901387	
HONDA	40100SJCA03
HONDA	40100SJCA04
HONDA	40100SJCA11
HONDA	40100SJCA12

PS901388	
HONDA	40100TW1H01

PS901389	
PONTIAC	15297403
PONTIAC	15922549
PONTIAC	25999283

PS901390	
HUMMER	15237029
HUMMER	15248624
HUMMER	20912522
HUMMER	25824022

PS901391	
CHEVROLET	15233114

Drive Line Part

Photo……

PS901392	
CHEVROLET	15814473
CHEVROLET	15916624

PS901393	
CHEVROLET	15109398
CHEVROLET	15766582

PS901394	
CHEVROLET	10382037
CHEVROLET	20912692
CHEVROLET	22828499
CHEVROLET	22845687
CHEVROLET	22847376

PS901395	
CHEVROLET	15082925
CHEVROLET	15109392
CHEVROLET	15713687

PS901396	
DODGE	52105412AA

PS901397	
DODGE	68034550AA
DODGE	68034550AB
DODGE	68034550AC

PS901398	
CHRYSLER	52099324
CHRYSLER	52099324AB
CHRYSLER	52105862AA
CHRYSLER	68234351AA
DODGE	52105862AB

PS901399	
DODGE	5157005AD
DODGE	5157005AE
DODGE	5157005AF
FIAT	05157005AE
FIAT	05157005AF
FIAT	K05157005AE
FIAT	K05157005AF

PS901400	
DODGE	52105602AB

PS901401	
FORD	1826578
FORD	2126752
FORD	CV614K357AD
FORD	CV614K357AF

PS901402	
FORD	1541780
FORD	9V4N7L190AA
VOLVO	31256426
VOLVO	P31256426

PS901403	
DODGE	52105598AA
DODGE	52123001AA
DODGE	K52105598AA

Drive Line Part

Photo……

PS901404	
DODGE	52123974AD
DODGE	52123974AE
DODGE	52123974AF
DODGE	52123974AG
DODGE	52123974AH
DODGE	52123974AI
DODGE	52123974AJ

PS901405	
DODGE	04593857AB
DODGE	04593857AC
DODGE	04593857AD
DODGE	4593857AB
DODGE	4593857AC
DODGE	4593857AD
DODGE	K04593857AB
DODGE	K04593857AC

PS901406	
CHRYSLER	52853017AB
CHRYSLER	52853017AC
CHRYSLER	52853017AD
CHRYSLER	52853017AE
CHRYSLER	52853017AF

PS901407	
CHRYSLER	52123196AA
CHRYSLER	52123196AB
CHRYSLER	52853019AB
CHRYSLER	52853019AC

PS901408	
CHRYSLER	68212031AB
CHRYSLER	68212031AC
CHRYSLER	68212031AD
CHRYSLER	68261528AA
CHRYSLER	68261528AB
CHRYSLER	68261528AC
CHRYSLER	68261528AD

PS901409	
CHRYSLER	68200149AA
CHRYSLER	68200149AB
CHRYSLER	68200149AC
CHRYSLER	68200149AD
CHRYSLER	68200149AE

PS901410	
CHRYSLER	04593681AA
CHRYSLER	4593681AA
CHRYSLER	4593681AB
CHRYSLER	4593681AC
CHRYSLER	4593681AD

PS901411	
CHRYSLER	04593679AA
CHRYSLER	04593679AB
CHRYSLER	04593679AC

PS901412	
CHRYSLER	04593650AC
CHRYSLER	04593650AD
CHRYSLER	04593650AE
CHRYSLER	04593650AF

PS901413	
BMW	26111229627

PS901414	
BMW	26107850370

PS901415	
BMW	26107525956
BMW	26107530310
BMW	26107573568

Drive Line Part

Photo……

PS901416	
AUDI	4B0521101H
AUDI	4B0521101S
AUDI	4B0521106C

PS901417	
AUDI	8T0521101AB
AUDI	8T0521101H
AUDI	8T0521101Q

PS901418	
AUDI	8T0521101AA
AUDI	8T0521101P

PS901419	
AUDI	8K0521101B

PS901420	
AUDI	8T0521101B

PS901421	
AUDI	8E0521101D
AUDI	8E0521101G
AUDI	8E0521101T
VW	8E0521101AB
VW	8E0521101P

PS901422	
AUDI	8E0521101AA
AUDI	8E0521101M

PS901423	
AUDI	4E0521101D
AUDI	4E0521101H

PS901424	
AUDI	4E4521101A
AUDI	4E4521101B
AUDI	4E4521101F

PS901425	
VOLVO	30783345

PS901426	
VOLVO	8636364

PS901427	
FORD	1528564
FORD	7N5N7L190AA
VOLVO	30759601
VOLVO	31256269

Drive Line Part

Photo……

PS901428	PS901429	PS901430	PS901431
LEXUS 3710048040	SUZUKI 2710080J02 SUZUKI 2710080J03	SUZUKI 2710266J10	BMW 26107641031

PS901432	PS901433	PS901434	PS901435
BMW 26117609365	BMW 26107600185 BMW 26108676287	BMW 26117502959	BMW 26111229554

PS901436	PS901437	PS901438	PS901439
BMW 26101229699 BMW 26107523787	BMW 26101229271	BMW 26104608329 BMW 26107597658 BMW 26107637026	BMW 26107526116

Drive Line Part

Photo……

PS901440	
BMW	26107638488

PS901441	
CHEVROLET	19328627
CHEVROLET	19355360
CHEVROLET	20811302
CHEVROLET	25793002
CHEVROLET	25899722
CHEVROLET	25918056

PS901442	
FORD	3C3Z4A376AA
FORD	5C344A376DA
FORD	5C344A376DB
FORD	5C344A376DC
FORD	5C344A376DD
FORD	5C344A376DE
FORD	5C344A376DF
FORD	5C344A376DG

PS901443	
FORD	F2GZ4R602E

PS901444	
CHRYSLER	68006640AA
CHRYSLER	68006641AA
CHRYSLER	68006658AA
CHRYSLER	68056107AA
CHRYSLER	68056112AA
MERCEDES-BENZ	9064100101
MERCEDES-BENZ	9064100301
MERCEDES-BENZ	9064101701

PS901445	
DODGE	68006637AA
DODGE	68006640AA
DODGE	68006641AA
DODGE	68006658AA
DODGE	68056107AA
DODGE	68056112AA
DODGE	68056138AA
DODGE	68138114AA

PS901446	
DODGE	05146801AA
DODGE	05146801AB

PS901447	
DODGE	52123325AA
DODGE	52123325AB
DODGE	52123325AC
DODGE	52123325AD

PS901448	
DODGE	52123111AA
DODGE	52123111AB
DODGE	52123111AC

PS901449	
DODGE	52105932AA
DODGE	52105932AB
DODGE	52105932AC
DODGE	52105932AD
DODGE	52105932AE
DODGE	52105932AF
DODGE	52105932AG

PS901450	
DODGE	68034653AB
DODGE	68034653AC
DODGE	68034653AD

PS901451	
DODGE	52105912AA
DODGE	52105912AB

Drive Line Part

Photo……

PS901452	
CHRYSLER	52105840AB
DODGE	52088046
DODGE	52088046AB
DODGE	52105840AA
DODGE	68234348AA

PS901453	
DODGE	05038553AE
DODGE	5038553AD
DODGE	53011150AA
JEEP	05038553AD
JEEP	53011150AB

PS901454	
DODGE	52123731AA
DODGE	52123731AB
DODGE	52123731AC

PS901455	
DODGE	52123632AA
DODGE	52123799AA
DODGE	52123799AB
DODGE	52123799AC

PS901456	
DODGE	52123470AC
DODGE	52123470AD
DODGE	52123470AE
DODGE	52123470AF

PS901457	
CHRYSLER	5157008AC
CHRYSLER	5157008AD
CHRYSLER	5157008AE
CHRYSLER	5157008AF

PS901458	
CHRYSLER	4641968AB
CHRYSLER	4641968AC
CHRYSLER	4641968AE
CHRYSLER	4641968AF
CHRYSLER	4641968AG
CHRYSLER	4641968AH
CHRYSLER	4641968AJ

PS901459	
CHRYSLER	52123973AB
CHRYSLER	52123973AC
CHRYSLER	52123973AD
CHRYSLER	52123973AE
CHRYSLER	52123973AF
CHRYSLER	52123973AG
CHRYSLER	52123973AH

PS901460	
BMW	26107630377

PS901461	
SUZUKI	2710167J01

PS901462	
TOYOTA	371400K110
TOYOTA	371400K111
TOYOTA	371400K112

PS901463	
BMW	26208611252
BMW	26209425908

Drive Line Part

Photo……

PS901464	PS901465	PS901466	PS901467
MERCEDES-BENZ 9064102101 MERCEDES-BENZ 906410210180 MERCEDES-BENZ A9064102101 MERCEDES-BENZ A906410210180	MERCEDES-BENZ 2214107606 MERCEDES-BENZ 2214108906 MERCEDES-BENZ 2214109906 MERCEDES-BENZ A2214107606 MERCEDES-BENZ A2214108906 MERCEDES-BENZ A2214109906	MERCEDES-BENZ 4474102200 MERCEDES-BENZ A4474102200	MERCEDES-BENZ 4474102100 MERCEDES-BENZ A4474102100

PS901468	PS901469	PS901470	PS901471
MERCEDES-BENZ 4474100200 MERCEDES-BENZ 4474104400 MERCEDES-BENZ A4474100200 MERCEDES-BENZ A4474104400	MERCEDES-BENZ 4474100600 MERCEDES-BENZ A4474100600 MERCEDES-BENZ A4474104700	MERCEDES-BENZ 2214106216 MERCEDES-BENZ A2214106216	MERCEDES-BENZ 2214102416 MERCEDES-BENZ 2214108406 MERCEDES-BENZ A2214102416 MERCEDES-BENZ A2214108406

PS901472	PS901473	PS901474	PS901475
MERCEDES-BENZ 2214102316 MERCEDES-BENZ A2214102316	MERCEDES-BENZ 1644102102 MERCEDES-BENZ 1644103402 MERCEDES-BENZ A1644102102 MERCEDES-BENZ A1644103402	MERCEDES-BENZ 1634100202 MERCEDES-BENZ 1634100502 MERCEDES-BENZ 1634101202 MERCEDES-BENZ 163410120239 MERCEDES-BENZ A1634100202 MERCEDES-BENZ A1634100502 MERCEDES-BENZ A1634101202 MERCEDES-BENZ A163410120239	MERCEDES-BENZ 1634100802 MERCEDES-BENZ A1634100802

Drive Line Part

Photo……

PS901476	PS901477	PS901478	PS901479
MERCEDES-BENZ 1634100402 MERCEDES-BENZ A1634100402	MERCEDES-BENZ 2044101100 MERCEDES-BENZ A2044101100	MERCEDES-BENZ 2534105001 MERCEDES-BENZ A2534105001	MERCEDES-BENZ 2124101316 MERCEDES-BENZ A2124101316

PS901480	PS901481	PS901482	PS901483
MERCEDES-BENZ 2124102716 MERCEDES-BENZ 2124103916 MERCEDES-BENZ A2124102716 MERCEDES-BENZ A2124103916	AUDI 4D4521101C	AUDI 4Z7521101K	AUDI 4Z7521101N

PS901484	PS901485	PS901487	PS901488
BMW 26107563154 BMW 26107614663	BMW 26107562814 BMW 26107591610 BMW 26107614658 BMW 26107631361 BMW 26108693394	ACURA 40100TZ6A21 ACURA 40100TZ6A22 ACURA 40100TZ6A23	ACURA 40100STKA02

Drive Line Part

Photo……

PS901489	PS901490	PS901491	PS901492
BMW 26107604996 BMW 26107614420	BMW 26112289464 BMW 26118047169	BMW 26101226433 BMW 26101226733 BMW 26111225635	BMW 26111227376

PS901493	PS901494	PS901495	PS901496
BMW 26107519293	BMW 26107527357	BMW 26107551203	BMW 26102283660

PS901497	PS901498	PS901499	PS901500
BMW 26107600174 BMW 26108678453	BMW 26107632655	BMW 26107632629	BMW 26101229422

Drive Line Part

Photo……

PS901501	
BMW	26107521849
BMW	26107531776

PS901502	
BMW	26107623697

PS901503	
BMW	26107582846
BMW	26107614659

PS901504	
BMW	26107630841

PS901505	
BMW	26107563497
BMW	26107614668
BMW	26107631363

PS901506	
BMW	26108623154

PS901507	
BMW	26107638475

PS901508	
BMW	26117514471

PS901509	
CHRYSLER	04593860AA
CHRYSLER	04593860AB
CHRYSLER	04593860AC
CHRYSLER	04593860AD
CHRYSLER	04593860AE
CHRYSLER	4593860AA
CHRYSLER	4593860AB
CHRYSLER	4593860AC

PS901510	
CHRYSLER	04593866AA
CHRYSLER	04593866AB
CHRYSLER	04593866AC
CHRYSLER	4593866AA
CHRYSLER	4593866AB
CHRYSLER	4593866AC

PS901511	
CHRYSLER	4593681AE
CHRYSLER	4593681AG

PS901512	
FORD	F37Z4A376B
MAZDA	ZZL125500
MAZDA	ZZM225500

Drive Line Part

Photo……

PS901513	
FORD	7A2Z4R602D
FORD	7A2Z4R602G
FORD	7A2Z4R602K
FORD	7A2Z4R602N

PS901514	
FORD	4L344602KB
FORD	4L3Z4602KA
FORD	4L3Z4602KB
FORD	5L344602KA
FORD	5L3Z4602KA

PS901515	
FORD	4L3Z4602JA
FORD	4L3Z4602JB
FORD	5L3Z4602JA

PS901516	
FORD	4L3Z4602AB
FORD	4L3Z4602AC
FORD	5L3Z4602YA
FORD	7L344602YA
FORD	7L3Z4602J

PS901517	
FORD	8A8Z4R602A
FORD	8A8Z4R602B
FORD	DA8Z4R602A
FORD	FA8Z4R602A

PS901518	
FORD	DG934K145AC
FORD	DG9Z4R602A

PS901519	
BUICK	15152332
CHEVROLET	15036984
GENERAL MOTORS	15036982
GENERAL MOTORS	15188012

PS901520	
BUICK	15194472

PS901521	
BUICK	15176232

PS901522	
CADILLAC	25753855
CADILLAC	25773368

PS901523	
CADILLAC	20990073
CADILLAC	25811730
CADILLAC	25811732
CADILLAC	25902501

PS901524	
CADILLAC	26050311
GENERAL MOTORS	26029960
GENERAL MOTORS	26056000

Drive Line Part

Photo……

PS901525	PS901526	PS901527	PS901528
CADILLAC 15036952 GENERAL MOTORS 26055999	GENERAL MOTORS 15064595	GENERAL MOTORS 15767177	CADILLAC 15087452 GENERAL MOTORS 15090194 GENERAL MOTORS 15182097 GENERAL MOTORS 15186002 GENERAL MOTORS 15769054

PS901529	PS901530	PS901531	PS901532
GENERAL MOTORS 10378152 GENERAL MOTORS 15109402 GENERAL MOTORS 15712400 GENERAL MOTORS 15767176 GENERAL MOTORS 15814472	GENERAL MOTORS 10383383 GENERAL MOTORS 20871263 GENERAL MOTORS 20912703 GENERAL MOTORS 22828500 GENERAL MOTORS 22845688 GENERAL MOTORS 22847377	GENERAL MOTORS 20871266 GENERAL MOTORS 20912705 GENERAL MOTORS 22828501 GENERAL MOTORS 22845689 GENERAL MOTORS 22847378 GENERAL MOTORS 25932512	CADILLAC 15814474

PS901533	PS901534	PS901535	PS901536
GENERAL MOTORS 15109397 GENERAL MOTORS 15713680	CADILLAC 15760034	GENERAL MOTORS 25714850 GENERAL MOTORS 25755438 GENERAL MOTORS 25771588	GENERAL MOTORS 15147147 GENERAL MOTORS 15147148 GENERAL MOTORS 15225525 GENERAL MOTORS 15225526

Drive Line Part

Photo……

PS901537	PS901538	PS901539	PS901540
CHEVROLET 26038120 GENERAL MOTORS 26057962	CHEVROLET 15039067	GENERAL MOTORS 15011500 GENERAL MOTORS 15113831 GENERAL MOTORS 15763590	GENERAL MOTORS 15200025 GENERAL MOTORS 15713683

PS901541	PS901542	PS901543	PS901544
CHEVROLET 26055464	GENERAL MOTORS 15038490 GENERAL MOTORS 26055461	CHEVROLET 15062956 GENERAL MOTORS 15006566 GENERAL MOTORS 15036981 GENERAL MOTORS 15062957 GENERAL MOTORS 15114530 GENERAL MOTORS 15188058 GENERAL MOTORS 15762968 GENERAL MOTORS 15762969	CHEVROLET 12556670

PS901545	PS901546	PS901547	PS901548
CHEVROLET 84386507 GENERAL MOTORS 84823325 GENERAL MOTORS 92237002	GENERAL MOTORS 84823323 GENERAL MOTORS 92194140 GENERAL MOTORS 92236999 GENERAL MOTORS 92244891 GENERAL MOTORS 92249105	CHEVROLET 84386508 CHEVROLET 84823326 CHEVROLET 92244724 GENERAL MOTORS 92223403 GENERAL MOTORS 92237001 GENERAL MOTORS 92242894 GENERAL MOTORS 92244894	CHEVROLET 84092225 CHEVROLET 84553700 CHEVROLET 84553701 GENERAL MOTORS 22999285 GENERAL MOTORS 84242552 GENERAL MOTORS 84242553 GENERAL MOTORS 84307001 GENERAL MOTORS 84307002

Drive Line Part

Photo……

PS901549	
CHEVROLET	15116624
CHEVROLET	15126589
CHEVROLET	15176137
CHEVROLET	25787947

PS901550	
CHEVROLET	15102671
CHEVROLET	25787946
GENERAL MOTORS	15798930

PS901551	
HONDA	40100TLAA02
HONDA	40100TLAA03

PS901552	
HYUNDAI	493002M450
HYUNDAI	493002M450DS
HYUNDAI	493002M460

PS901553	
HYUNDAI	493003M000
HYUNDAI	493003M100

PS901554	
HYUNDAI	493002M350
HYUNDAI	493002M350DS
HYUNDAI	493002M360

PS901555	
HYUNDAI	491004H050

PS901556	
HYUNDAI	491004H100
HYUNDAI	491004H150

PS901557	
HYUNDAI	49300B8100
HYUNDAI	49300B8150

PS901558	
HYUNDAI	493002W100
HYUNDAI	493004Z200
HYUNDAI	493004Z250

PS901559	
HYUNDAI	493002S500

PS901560	
JEEP	52123612AA
JEEP	52123612AB
JEEP	52123612AC
JEEP	52123612AD
JEEP	52123612AE
JEEP	52123612AF
JEEP	52123612AG
JEEP	52123612AH

Drive Line Part

Photo……

PS901561	
CHRYSLER	52853436AB
CHRYSLER	52853436AC
JEEP	52105760AB
JEEP	52105760AC
JEEP	52105760AD
JEEP	52105760AE
JEEP	52105760AF
JEEP	RL105760AF

PS901562	
JEEP	52853006AB
JEEP	52853006AC
JEEP	52853006AD
JEEP	52853006AE
JEEP	52853006AF

PS901563	
JEEP	52099487
JEEP	52099487AB
JEEP	52099487AC
JEEP	52099487AD
JEEP	52099487AE
JEEP	52099487AF

PS901564	
JEEP	52099484
JEEP	52099484AD
JEEP	52105972AA
JEEP	52853088AA

PS901565	
JEEP	52099486AB
JEEP	52099486AC
JEEP	52105973AA

PS901566	
CHRYSLER	52099485AC
JEEP	52111483AA
JEEP	52111483AB
JEEP	52111483AC
JEEP	52111483AD

PS901567	
JEEP	52105530
JEEP	52105530AC
JEEP	52105530AD
JEEP	52105530AF

PS901568	
JEEP	52853003AB
JEEP	52853003AC
JEEP	52853003AD
JEEP	52853003AE
JEEP	52853003AF

PS901569	
JEEP	52853647AC
JEEP	52853647AD
JEEP	52853647AE
JEEP	52853647AF

PS901570	
JEEP	52123514AA
JEEP	52123514AB
JEEP	52123514AC
JEEP	52123514AD

PS901571	
JEEP	52853646AC
JEEP	52853646AD
JEEP	52853646AE
JEEP	52853646AF

PS901573	
CHRYSLER	52123629AA
CHRYSLER	52123629AC
CHRYSLER	52123629AD
CHRYSLER	52123629AE
JEEP	68206210AA
JEEP	68206210AB
JEEP	68206210AC
JEEP	68206210AD

Drive Line Part

Photo……

PS901574	
JEEP	53010904AA
JEEP	53010904AB
JEEP	53010904AC

PS901575	
JEEP	52111559AB
JEEP	52111559AC
JEEP	52111559AD

PS901576	
JEEP	52853118AA
JEEP	52853118AB
JEEP	52853118AC
JEEP	52853118AD

PS901577	
CHRYSLER	52111558AB
CHRYSLER	52111558AC
CHRYSLER	52111558AE
CHRYSLER	52111558AF
JEEP	52111558AD

PS901578	
JEEP	52111557AB
JEEP	52111557AC
JEEP	52111557AD
JEEP	52111557AE
JEEP	52111557AF
JEEP	52111557AI

PS901579	
JEEP	52853441AC
JEEP	52853441AD
JEEP	52853441AE
JEEP	52853441AF

PS901580	
JEEP	52853160AA

PS901581	
JEEP	52853407AA

PS901582	
JEEP	52098218
JEEP	53002003
JEEP	53004526

PS901583	
JEEP	56052585AA

PS901584	
KIA	491003E461

PS901585	
KIA	49300C5000

Drive Line Part

Photo……

PS901586	PS901587	PS901588	PS901589
KIA 493002P100	LAND ROVER FTC3905	MERCEDES-BENZ 2044106901 MERCEDES-BENZ 2214103501 MERCEDES-BENZ A2044106901 MERCEDES-BENZ A2214103501	MERCEDES-BENZ 2044102401 MERCEDES-BENZ A2044102401

PS901591	PS901593	PS901594	PS901595
MERCEDES-BENZ 9064107516 MERCEDES-BENZ 906410751680 MERCEDES-BENZ A9064107516 MERCEDES-BENZ A906410751680 VW 2E0521163Q	NISSAN 373007S100 NISSAN 373007S10B	NISSAN 372007S100 NISSAN 372007S110 NISSAN 372007S120 NISSAN 372007S12A NISSAN 37200ZE20A NISSAN 37200ZE25A NISSAN 37200ZP90A NISSAN 37200ZZ70A	NISSAN 372005X00A

PS901596	PS901597	PS901598	PS901599
NISSAN 370001AA0A NISSAN 370001AA1A	NISSAN 373004W900	NISSAN 37300EA500 NISSAN 37300ZL90A NISSAN 37300ZP80A	NISSAN 370003JA2A NISSAN 370003JA2B

Drive Line Part

Photo……

PS901600	
NISSAN	370004EF0B
NISSAN	370006MA0A

PS901601	
NISSAN	370004BA0A

PS901602	
NISSAN	37200EZ00B

PS901603	
NISSAN	37200EZ20A

PS901604	
SUBARU	27111AE060
SUBARU	27111AE061
SUBARU	27111AE062
SUBARU	27111AE120
SUBARU	27111AE121
SUBARU	27111AE122
SUBARU	27111AE12A
SUBARU	27111AE12B

PS901605	
SUBARU	27111AE09A
SUBARU	27111AE09B

PS901606	
SUBARU	27111SA000
SUBARU	27111SA001

PS901607	
SUBARU	27111SA050

PS901608	
SUBARU	27111FE040
SUBARU	27111FE041

PS901609	
SUBARU	27031AC080

PS901610	
SUBARU	27031AC270
SUBARU	27031AC290

PS901611	
SUBARU	27111AE10A
SUBARU	27111AE10B

Drive Line Part

Photo……

PS901612	
SUBARU	27111AG02A
SUBARU	27111AG06A

PS901613	
SUBARU	27111AJ02A
SUBARU	27111AJ02B
SUBARU	27111AJ02C
SUBARU	27111AJ02D
SUBARU	27111AJ02E

PS901614	
SUBARU	27111AJ00A
SUBARU	27111AJ00B
SUBARU	27111AJ00C
SUBARU	27111AJ00D
SUBARU	27111AJ00E

PS901615	
SUBARU	27111AJ03A
SUBARU	27111AJ03B
SUBARU	27111AJ03C
SUBARU	27111AJ03D

PS901616	
SUBARU	27111AJ10A
SUBARU	27111AJ10B
SUBARU	27111AJ10C
SUBARU	27111AJ10D
SUBARU	27111AJ10E

PS901617	
SUBARU	27111AG10A
SUBARU	27111AG14A

PS901618	
SUBARU	27111AG12A
SUBARU	27111AG16A

PS901619	
SUBARU	27111AJ13A
SUBARU	27111AJ13B
SUBARU	27111AJ13C
SUBARU	27111AJ13D

PS901620	
TOYOTA	3711060450
TOYOTA	371106A070
TOYOTA	371106A330

PS901621	
TOYOTA	371103D300

PS901622	
TOYOTA	3711025710
TOYOTA	3714060470

PS901623	
TOYOTA	3711004050
TOYOTA	371103D210

Drive Line Part

Photo……

PS901624	
TOYOTA	3710035740
TOYOTA	371003D220

PS901625	
TOYOTA	3714004040
TOYOTA	3714004041

PS901626	
TOYOTA	3711004170
TOYOTA	3711004171
TOYOTA	3711004172

PS901627	
TOYOTA	3710004380
TOYOTA	3710004381
TOYOTA	3710004382

PS901628	
TOYOTA	3710004350
TOYOTA	3710004351
TOYOTA	3710004352

PS901629	
TOYOTA	3710004360
TOYOTA	3710004361
TOYOTA	3710004362
TOYOTA	3710004363

PS901630	
TOYOTA	3714004060
TOYOTA	3714004061

PS901631	
TOYOTA	3710004440
TOYOTA	3710004441

PS901632	
TOYOTA	3714004090
TOYOTA	3714004091
TOYOTA	3714004092

PS901633	
TOYOTA	371000C100
TOYOTA	371000C101
TOYOTA	371000C102
TOYOTA	371000C103
TOYOTA	371000C104
TOYOTA	371000C105
TOYOTA	371000C106

PS901634	
BMW	26117526136

PS901635	
BMW	26107535891

Drive Line Part

Photo……

PS901636	PS901637	PS901638	PS901639
BMW 26117505211	BMW 26111229560	BMW 26107527339	BMW 26117504776

PS901640	PS901641	PS901642	PS901643
BMW 26107531310 BMW 26107551207	AUDI 8J0521101N	VW 7E0521101 VW 7E0521101C	VW 4M0521101CT VW 4M0521101G

PS901644	PS901645	PS901646	PS901647
LAND ROVER FTC4198	LAND ROVER FPLA4365AA LAND ROVER HPLA4365BB LAND ROVER LR057583 LAND ROVER LR082558	LAND ROVER HPLA4365AA LAND ROVER LR049407 LAND ROVER LR082554	LAND ROVER GK727L190AB LAND ROVER LR072103

Drive Line Part

Photo……

PS901648	PS901649	PS901650	PS901651
LAND ROVER LR060379 LAND ROVER LR072497 LAND ROVER LR072603	LAND ROVER EH224365AA LAND ROVER LR050890	LAND ROVER GJ327L190BB LAND ROVER LR071966	LAND ROVER GJ327L190AB LAND ROVER LR071965

PS901652	PS901655	PS901656	PS901657
LAND ROVER JPLA4365AA LAND ROVER LR100831	MITSUBISHI 3401A942	MITSUBISHI 3401A317 MITSUBISHI MN168570	PORSCHE 95842101110 PORSCHE 95842101111 PORSCHE 95842101112 PORSCHE 95842101113 PORSCHE 958521102A VW 7P0521102H VW 7P0521102K VW 7P0521102M

PS901658	PS901659	PS901660	PS901661
MERCEDES-BENZ 2044100406 MERCEDES-BENZ 2044105106 MERCEDES-BENZ A2044100406 MERCEDES-BENZ A2044105106	MERCEDES-BENZ 2044100116 MERCEDES-BENZ A2044100116	MERCEDES-BENZ 2044100806 MERCEDES-BENZ 2044106606 MERCEDES-BENZ A2044100806 MERCEDES-BENZ A2044106606	VW 3D7521101C VW 3D7521101K

Drive Line Part

Photo……

PS901662	
VOLVO	31256271
VOLVO	8689886

PS901663	
TOYOTA	371400C010

PS901664	
TOYOTA	3710034050
TOYOTA	3710034051

PS901665	
TOYOTA	3710034130

PS901666	
TOYOTA	3710012650

PS901667	
MAZDA	KG0325100C
MAZDA	KG0325100D
MAZDA	KG0325100D9U

PS901668	
MAZDA	PH0125100
MAZDA	PH0125100A
MAZDA	PH0125100B
MAZDA	PH0125100C

PS901669	
KIA	491003E400
KIA	491003E450

PS901670	
SUZUKI	2710167J00

PS901671	
MITSUBISHI	MR580646

PS901672	
TOYOTA	3714035140

PS901673	
FORD	1747662
FORD	1814843
FORD	1928876
FORD	8C164K357CF
FORD	CC114K357CC
FORD	CC114K357CD

Drive Line Part

Photo……

PS901674	
AUDI	2E0521101T
MERCEDES-BENZ	2E0521292A
MERCEDES-BENZ	9064100201
MERCEDES-BENZ	9064100501
MERCEDES-BENZ	9064101601
MERCEDES-BENZ	9064102301
MERCEDES-BENZ	9064103401
MERCEDES-BENZ	906410340180

PS901675	
NISSAN	37300EB30A

PS901676	
MITSUBISHI	3401A458

PS901681	
JEEP	52111591AA
JEEP	52111591AB
JEEP	RL111591AB

PS901682	
TOYOTA	371000K820
TOYOTA	371000KG80
TOYOTA	371000KR30

PS901683	
NISSAN	37000EY10A
NISSAN	37000EY10B

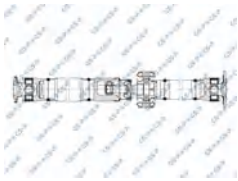

PS901684	
MERCEDES-BENZ	2E0521101CD
MERCEDES-BENZ	9064103816
MERCEDES-BENZ	906410381680
MERCEDES-BENZ	A9064103816
MERCEDES-BENZ	A906410381680

PS901685	
MERCEDES-BENZ	9064103200
MERCEDES-BENZ	906410320080
MERCEDES-BENZ	9064105716
MERCEDES-BENZ	A9064103200
MERCEDES-BENZ	A906410320080
MERCEDES-BENZ	A9064105716

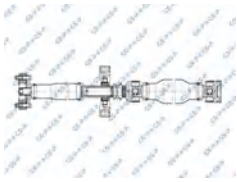

PS901686	
NISSAN	37000EY20A
NISSAN	37000EY20B

PS901687	
RENAULT	320002325R
RENAULT	8200987034

PS901688	
FORD	XL144602AA

PS901689	
BMW	26107638328

Drive Line Part

Photo……

PS901690	
FORD	FB5Z4R602A

PS901691	
NISSAN	3700086G10
NISSAN	3700092G10
NISSAN	37000S4203

PS901702	
TOYOTA	3711035480
TOYOTA	3711035481

PS901703	
SUZUKI	2710185C01

PS901704	
SUZUKI	2710280K10

PS901705	
MERCEDES-BENZ	9064105506
MERCEDES-BENZ	A9064105506

PS901706	
MERCEDES-BENZ	2134107402
MERCEDES-BENZ	2134108501
MERCEDES-BENZ	A2134107402
MERCEDES-BENZ	A2134108501

PS901708	
MERCEDES-BENZ	9064103400
MERCEDES-BENZ	906410340080
MERCEDES-BENZ	9064105916
MERCEDES-BENZ	A9064103400
MERCEDES-BENZ	A906410340080
MERCEDES-BENZ	A9064105916

PS901709	
BMW	26107537311

PS901715	
MERCEDES-BENZ	4474101500
MERCEDES-BENZ	4474105200
MERCEDES-BENZ	4474109800
MERCEDES-BENZ	A4474101500
MERCEDES-BENZ	A4474105200
MERCEDES-BENZ	A4474109800

PS901716	
MERCEDES-BENZ	4604100018
MERCEDES-BENZ	4604102218
MERCEDES-BENZ	460410221860
MERCEDES-BENZ	460410221880
MERCEDES-BENZ	4634101302
MERCEDES-BENZ	A4604100018
MERCEDES-BENZ	A4604102218
MERCEDES-BENZ	A460410221860

PS901717	
MERCEDES-BENZ	1664101701
MERCEDES-BENZ	1664108600
MERCEDES-BENZ	A1664101701
MERCEDES-BENZ	A1664108600

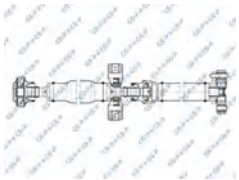

Drive Line Part

Photo……

PS901718	
HYUNDAI	49300D3000

PS901720	
AUDI	8W0521101C
AUDI	8W0521101K

PS901721	
MERCEDES-BENZ	2044106806
MERCEDES-BENZ	A2044106806

PS901722	
MITSUBISHI	3401A147

PS901723	
MERCEDES-BENZ	2224108001
MERCEDES-BENZ	A2224108001

PS901724	
TOYOTA	371000KC10

PS901725	
MERCEDES-BENZ	2134107900
MERCEDES-BENZ	A2134107900

PS901727	
BMW	26117530512

PS901729	
VOLVO	31437994
VOLVO	32249775
VOLVO	32339132

PS901733	
NISSAN	373000F000
NISSAN	373002X960

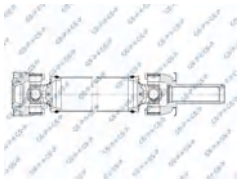

PS901735	
JAGUAR	C2Z22408
JAGUAR	C2Z29119
JAGUAR	DX234365LA

PS901738	
HYUNDAI	493002M202
HYUNDAI	493002M400
HYUNDAI	493002M400DS
HYUNDAI	493002M410

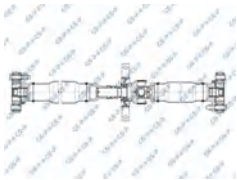

Drive Line Part

Photo……

PS901739	
HYUNDAI	493002M102
HYUNDAI	493002M300
HYUNDAI	493002M300DS
HYUNDAI	493002M310

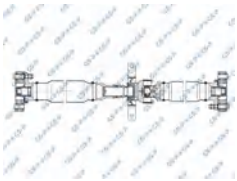

PS901740	
HYUNDAI	493002M252

PS901741	
HYUNDAI	493003M400

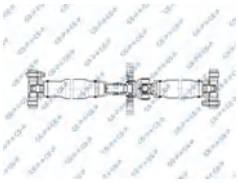

PS901742	
HYUNDAI	493002M151

PS901744	
TOYOTA	3711060890

PS901745	
PORSCHE	95B521101A
PORSCHE	95B521101B
PORSCHE	95B521101D
PORSCHE	95B521101M
PORSCHE	95B521101S

PS901746	
HYUNDAI	493003M600

PS901747	
HYUNDAI	493003M800

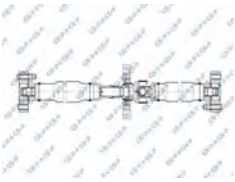

PS901748	
OPEL	13309769
OPEL	22754607
OPEL	22960219
OPEL	4460680
OPEL	4460760
OPEL	4460810
OPEL	4462140
OPEL	55560079

PS901749	
MERCEDES-BENZ	6394109506
MERCEDES-BENZ	A6394109506

PS901750	
JEEP	52853651AC
JEEP	52853651AD
JEEP	52853651AE
JEEP	52853651AF

PS901751	
TOYOTA	371103D060

Drive Line Part

Photo……

PS901752	PS901753	PS901754	PS901755
JEEP 52098702	JAGUAR GX633219AC JAGUAR T2H3248	TOYOTA 3714060270 TOYOTA 3714060360	MERCEDES-BENZ 4474100800 MERCEDES-BENZ 4474104900 MERCEDES-BENZ A4474100800 MERCEDES-BENZ A4474104900

PS901756	PS901787	PS901811	PS901816
HYUNDAI 493003N800	DODGE 4578036AA DODGE 4578036AB DODGE 4578036AC DODGE 4578036AD DODGE 4578036AE DODGE 4578036AF DODGE 4578036AG DODGE 4578036AH	PORSCHE 99642102050 PORSCHE 99742102000 PORSCHE 99742102001	GREAT WALL 2203000K07E
		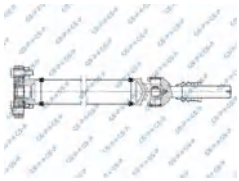	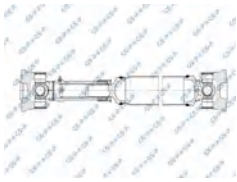

PS901818	PS901819	PS901820	PS901821
GEELY 4082007800	CHERY T112202020CB	GREAT WALL 2201000K07E	GREAT WALL 2203000K07EB1
	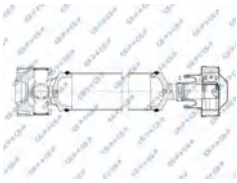	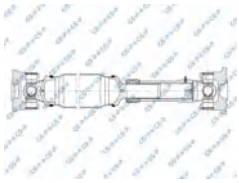	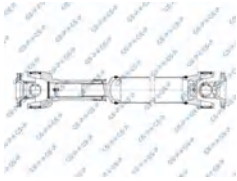

Drive Line Part

Photo……

PS901822	PS901824	PS901825	PS901826
MERCEDES-BENZ 4604100618	VW 7E3521102D	AUDI 8K0521101F	TOYOTA 371106A460
MERCEDES-BENZ 4634101202	VW 7E3521102F	AUDI 8K0521101M	
MERCEDES-BENZ A4604100618		AUDI 8K0521101T	
MERCEDES-BENZ A4634101202			
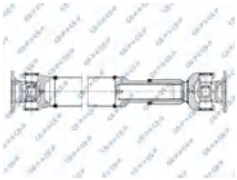	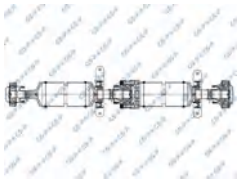	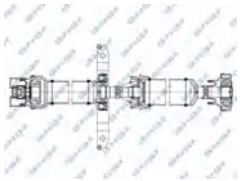	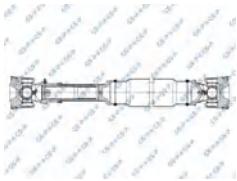

PS901827	PS901828	PS901829	PS901832
MERCEDES-BENZ 4604104504	VW 2E0521293T	MERCEDES-BENZ 9064103516	TOYOTA 371000KB00
MERCEDES-BENZ A4604104504	VW 9064109406	MERCEDES-BENZ A9064103516	TOYOTA 371000KB00B
	VW 906410940680	VW 2E0521101CA	
	VW A9064109406		
	VW A906410940680		
	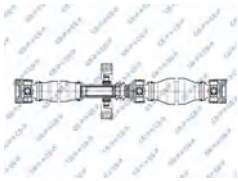	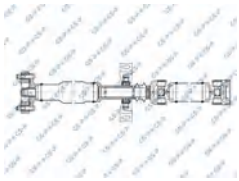	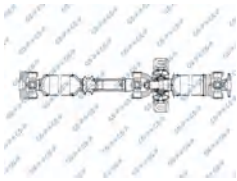

PS901840	PS901848	PS901849	PS901850
PORSCHE 97042103130	MERCEDES-BENZ 4474101306	BMW 26117505214	MERCEDES-BENZ 4634100400
PORSCHE 97042103131	MERCEDES-BENZ A4474101306		MERCEDES-BENZ A4634100400
	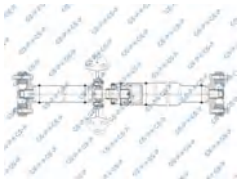	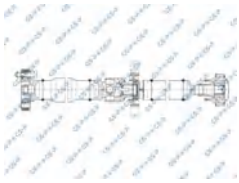	

Drive Line Part

Photo……

PS901855	PS901857	PS901858	PS901863
MERCEDES-BENZ 9064100716 MERCEDES-BENZ 9064102706 MERCEDES-BENZ 9064107716 MERCEDES-BENZ A9064100716 MERCEDES-BENZ A9064102706 MERCEDES-BENZ A9064107716	MERCEDES-BENZ 9064107606 MERCEDES-BENZ A9064107606	MERCEDES-BENZ 9064101516 MERCEDES-BENZ 9064103806 MERCEDES-BENZ A9064101516 MERCEDES-BENZ A9064103806 VW 2E0521101BF VW 2E0521293AD	MERCEDES-BENZ 4474100700 MERCEDES-BENZ A4474100700

PS901868	PS901874	PS901877	PS901879
BMW 26107574679	AUDI 8W0521101D AUDI 8W0521101H	TOYOTA 3711060A80 TOYOTA 3711060B30 TOYOTA 3711060B70	KIA K01125100A
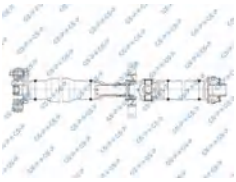			

PS901881	PS901882	PS901884	PS901893
MERCEDES-BENZ 4604100718 MERCEDES-BENZ 4604102118 MERCEDES-BENZ 4634101102 MERCEDES-BENZ A4604100718 MERCEDES-BENZ A4604102118 MERCEDES-BENZ A4634101102	NISSAN 372004JM0A	TOYOTA 3714035050 TOYOTA 3714035080	NISSAN 372004JA0A
	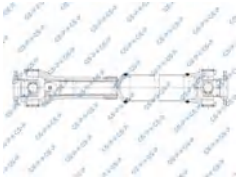		

Drive Line Part

Photo……

PS901894	
BMW	26107562825
BMW	26107631345
BMW	26107631348

PS901895	
BMW	26107572934
BMW	26107599423

PS901904	
MERCEDES-BENZ	2514101202
MERCEDES-BENZ	2514102102
MERCEDES-BENZ	A2514101202
MERCEDES-BENZ	A2514102102

PS901905	
MITSUBISHI	3401A550

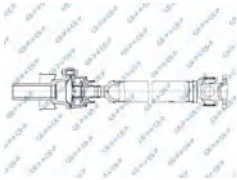

PS901909	
ALFA ROMEO	46338463
ALFA ROMEO	46341887

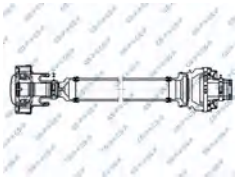

PS901914	
MERCEDES-BENZ	4474105400
MERCEDES-BENZ	A4474105400

PS901915	
NISSAN	370004BD0A

PS901918	
VOLVO	31492149
VOLVO	32249770
VOLVO	32339127

PS901920	
AUDI	8V0521101C

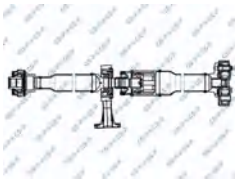

PS901922	
CHERY	T112202010CB

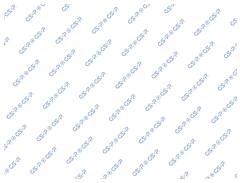

PS901923	
AUDI	4F0521101G
AUDI	4F0521101H

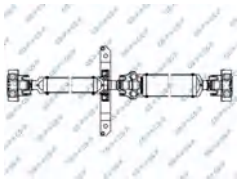

PS901927	
JEEP	52853329AA
JEEP	52853329AB
JEEP	52853329AC
JEEP	68022107AA
JEEP	68022107AB
JEEP	68022107AC

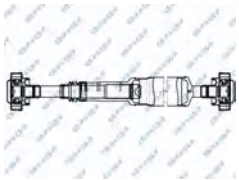

Drive Line Part

Photo……

PS901928	
CHRYSLER	52853404AD
JEEP	52853404AA
JEEP	52853404AB
JEEP	52853404AC
JEEP	52853404AE
JEEP	52853404AF
JEEP	52853404AG

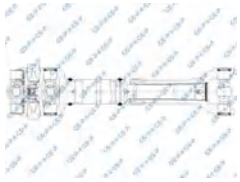

PS901929	
JEEP	52123730AB
JEEP	52123730AC
JEEP	52123730AD

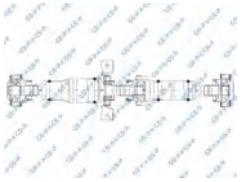

PS901932	
JEEP	52123626AA
JEEP	52123626AC
JEEP	52123626AD

PS901933	
JEEP	05038552AA
JEEP	5038552AA
JEEP	5038552AB
JEEP	53010967AA
JEEP	53010968AA
JEEP	68193651AA
JEEP	68193651AB

PS901948	
BMW	26117505206

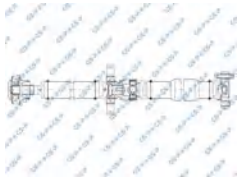

PS901949	
SUZUKI	27102B60A01

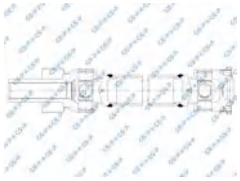

PS901951	
LAND ROVER	EK524365AA
LAND ROVER	EK524365AB
LAND ROVER	EK524365AC
LAND ROVER	LR052319
LAND ROVER	LR061575
LAND ROVER	LR072499

PS901952	
MERCEDES-BENZ	2474104200
MERCEDES-BENZ	2474104500
MERCEDES-BENZ	2474105000
MERCEDES-BENZ	247410500080
MERCEDES-BENZ	A2474104200
MERCEDES-BENZ	A2474104500
MERCEDES-BENZ	A2474105000
MERCEDES-BENZ	A247410500080

PS901954	
PORSCHE	95B521101AB
PORSCHE	95B521101E
PORSCHE	95B521101J
PORSCHE	95B521101Q
PORSCHE	95B521101T

PS901955	
AUDI	8W6521101
AUDI	8W6521101F

PS901965	
MERCEDES-BENZ	9064106006
MERCEDES-BENZ	A9064106006
VW	2E0521101BD

PS901966	
HYUNDAI	491004H400

Drive Line Part

Photo……

PS901967	
BENTLEY	3W5521101A
BENTLEY	3W5521101B

PS901969	
BENTLEY	3W0521101B
BENTLEY	3W0521101C
BENTLEY	3W0521101D

PS901970	
AUDI	4N4521101
AUDI	4N4521101H

PS901971	
SUZUKI	2710054P00
SUZUKI	2710054P01

PS901982	
BMW	26107562830
BMW	26107631346

PS901983	
MERCEDES-BENZ	9064101716
MERCEDES-BENZ	906410171680
MERCEDES-BENZ	9064104006
MERCEDES-BENZ	9064104706
MERCEDES-BENZ	A9064101716
MERCEDES-BENZ	A906410171680
MERCEDES-BENZ	A9064104006
MERCEDES-BENZ	A9064104706

PS901984	
BMW	26107563150
BMW	26107631347

PS901986	
MERCEDES-BENZ	9064101616
MERCEDES-BENZ	906410161680
MERCEDES-BENZ	9064103906
MERCEDES-BENZ	9064104506
MERCEDES-BENZ	A9064101616
MERCEDES-BENZ	A906410161680
MERCEDES-BENZ	A9064103906
MERCEDES-BENZ	A9064104506

Joint,Propeller Shaft

Basic Dimension Table GSP to Dimension……

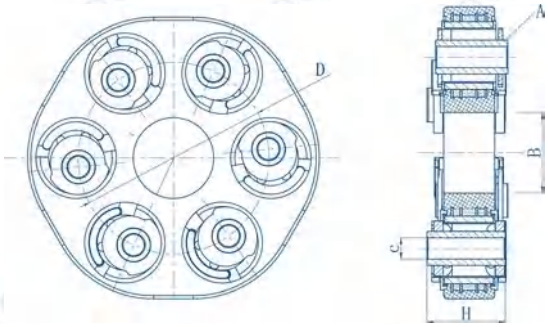

Product	GSP Ref.	BASIC DIMENSIONS(mm)				
		A	B	C	D	H
Flexible Coupling	**510433**	6	33	10	80	29
Flexible Coupling Kit	**510433S**	6	33	10	80	29
Flexible Coupling Kit	**510434S**	6	37	10	90	37.5
Flexible Coupling	**510436**	6	37	10	90	37.5
Flexible Coupling	**510458**	6	38.5	10	80	34
Flexible Coupling Kit	**510459S**	6	38.5	10	80	26
Flexible Coupling	**510460**	6	38.5	10	80	115
Flexible Coupling	**510569**	6	39	10	90	28.5
Flexible Coupling Kit	**510570S**	6	39	10	90	28.5
Flexible Coupling	**510571**	6	42	12	100	36
Flexible Coupling Kit	**510571S**	6	42	12	100	36
Flexible Coupling	**510575**	6	51.5	12	110	26
Flexible Coupling Kit	**510576S**	6	51.5	12	110	26
Flexible Coupling Kit	**510578S**	6	37	10	90	37.5
Flexible Coupling	**510579**	6	46.5	12	100	30
Flexible Coupling Kit	**510579S**	6	46.5	12	100	30
Flexible Coupling Kit	**510580S**	6	46.5	12	100	30
Flexible Coupling	**510596**	6	50	12	96	30
Flexible Coupling Kit	**510596S**	6	50	12	96	30
Flexible Coupling	**510597**	6	38	12	78	32
Flexible Coupling Kit	**510597S**	6	38.5	12	78	32
Flexible Coupling	**510641**	6	38.5	10	78	28
Flexible Coupling Kit	**510641S**	6	38.5	10	78	28
Flexible Coupling	**510663**	6	53	14	105	35
Flexible Coupling	**511086**	6	40	8.3	80	28
Flexible Coupling Kit	**511086S**	6	40	8.3	80	
Flexible Coupling	**512326**	6	37	10	90	37.5
Flexible Coupling	**512672**	6	57.5	12	110	34.9
Flexible Coupling Kit	**512672S**	6	57.5		110	34.9
Flexible Coupling Kit	**512673S**	6	50	12	100	32
Flexible Coupling	**512676**	6	58	12	108	31.2
Flexible Coupling	**512677**	6	57.5	12	110	35
Flexible Coupling Kit	**512677S**	6	57.5	12	110	35
Flexible Coupling	**512678**	6	50	12	100	32
Flexible Coupling Kit	**512678S**	6	50	12	100	32
Flexible Coupling Kit	**513053S**	6	42	8.2	85	
Flexible Coupling	**517649**	6	51	12.2	115.5	36
Flexible Coupling	**517747**	6	31.5	10	80	36.5
Flexible Coupling	**517955**	6	54.5	12	105	41.3
Flexible Coupling Kit	**517955S**	6	54.5	12	105	41.3
Flexible Coupling	**517956**	6	57.5	10	105.5	35.6
Flexible Coupling Kit	**517956S**	6	56.5	10	105	35.5
Flexible Coupling	**517957**	6	58	12	110	38.5
Flexible Coupling Kit	**517957S**	6	56	12	110	38.5
Flexible Coupling	**519580**	6	38.5	12.1	78	32
Flexible Coupling	**530160**	6	44	12	110	42
Flexible Coupling Kit	**530160S**	6	44	12	110	42
Flexible Coupling	**530758**	6	43.5	12	110	42
Flexible Coupling Kit	**530758S**	6	43.5	12	110	42
Flexible Coupling	**533418**	6	64.5	14	120	43.5
Flexible Coupling	**533419**	6	43	10	90	32

Joint,Propeller Shaft

Basic Dimension Table GSP to Dimension……

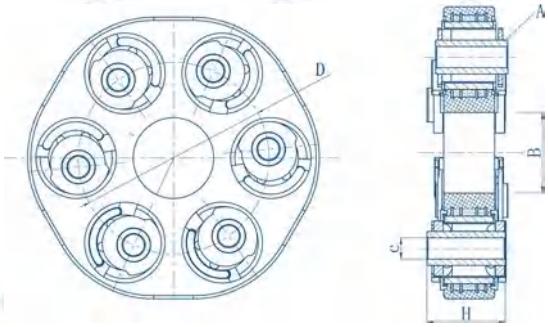

Product	GSP Ref.	BASIC DIMENSIONS(mm)				
		A	B	C	D	H
Flexible Coupling	**533420**	6	56	12	105	35
Flexible Coupling	**533422**	6	50	12	96	32
Flexible Coupling Kit	**533422S**	6	50	12	96	32
Flexible Coupling	**533878**	6	49	10	96	33.3
Flexible Coupling	**533882**	6	38	11	96	33
Flexible Coupling Kit	**533882S**	6	38	11	96	40.5
Flexible Coupling	**533884**	6	70	12.1	120	36
Flexible Coupling Kit	**533884S**	6	69.5	12	120	44
Flexible Coupling	**537625**	6	50	12	96	29.5
Flexible Coupling Kit	**537625S**	6		12	96	30
Flexible Coupling	**537626**	6	56	10	105	18
Flexible Coupling Kit	**537626S**	6	56	10	105	18
Flexible Coupling	**537627**	6	48.5	12	100	28
Flexible Coupling Kit	**537627S**	6	48.5	12	100	32
Flexible Coupling	**537630**	6	57.5	12	110	31
Flexible Coupling Kit	**537630S**	6	57.5	12	110	35
Flexible Coupling	**537631**	6	48.5	12	96	29.5
Flexible Coupling Kit	**537631S**	6	48.5	12	96	30
Flexible Coupling	**537668**	6	56	12	110	34
Flexible Coupling Kit	**537668S**	6	56	12	110	38.5
Flexible Coupling	**537669**	6	55	12	105	37
Flexible Coupling Kit	**537669S**	6	55	12	105	41.3
Flexible Coupling Kit	**537791S**	6	32	10	80	37
Flexible Coupling Kit	**537792S**	6	57.5	12	110	35
Flexible Coupling Kit	**537793S**	6	57.5	12	110	35
Flexible Coupling Kit	**537794S**	6	57.5	12	110	35
Flexible Coupling Kit	**537796S**	6	46.5	12	100	30
Flexible Coupling Kit	**537797S**	6	50	12	100	32
Flexible Coupling Kit	**537798S**	6	38.5	10	78	28
Flexible Coupling	**537818**	6	40	10	80	28.5
Flexible Coupling Kit	**537819S**	6	50	12	100	40
Flexible Coupling Kit	**537820S**	6	32	10	80	44
Flexible Coupling Kit	**537821S**	6	41	10	90	36
Flexible Coupling Kit	**537832S**	6	70	12.1	120	36
Flexible Coupling	**537843**	6	69.5		120	44
Flexible Coupling Kit	**537843S**	6	69.5		120	44
Flexible Coupling	**537847**	6	48.5	12	100	32
Flexible Coupling Kit	**537848S**	6	57.5	12	110	34.9
Flexible Coupling	**537849**	6	48.5	12	96	30
Flexible Coupling Kit	**537850S**	6	42	12	100	36
Flexible Coupling	**537851**	6	70	12	120	36
Flexible Coupling Kit	**537851S**	6	70	12	120	36
Flexible Coupling	**537853**	6	63	10	120	23
Flexible Coupling Kit	**537889S**	6	57.5	12	110	34.9
Flexible Coupling	**538111**	6	50	12	100	32
Flexible Coupling Kit	**538112S**	6	49	10	96	33.3
Flexible Coupling	**538136**	6	32	10	80	36.5
Flexible Coupling Kit	**538137S**	6	38.5	10	80	26.4
Flexible Coupling	**538501**	6	58	12	110	34.9
Flexible Coupling Kit	**538501S**	6	58	12	110	34.9
Flexible Coupling	**538502**	6	50	12	100	32

Joint,Propeller Shaft

Basic Dimension Table GSP to Dimension……

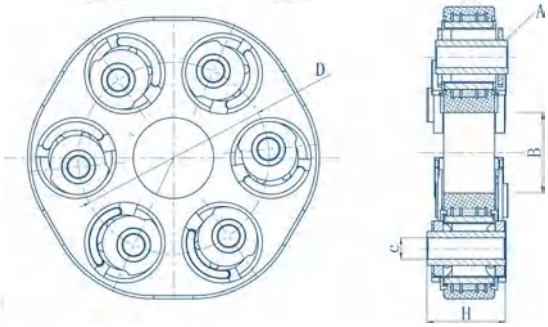

Product	GSP Ref.	BASIC DIMENSIONS(mm)				
		A	B	C	D	H
Flexible Coupling	**538503**	6	58	12	110	34.9
Flexible Coupling Kit	**538504S**	6	40	10	78	23
Flexible Coupling	**538505**	6	57.5	12	110	35
Flexible Coupling Kit	**538505S**	6	57.5	12	110	35
Flexible Coupling	**538506**	6	71	12	120	36
Flexible Coupling	**538507**	6	45	10	96	34
Flexible Coupling Kit	**538508S**	6	45	10	96	34
Flexible Coupling Kit	**538509S**	6	69.5	12	120	44
Flexible Coupling	**538510**	6	50	12	100	32
Flexible Coupling	**538511**	6	40	10	78	23
Flexible Coupling	**538512**	6	56	12.1	110	41.5
Flexible Coupling	**538513**	6	63	12.1	110	29.8
Flexible Coupling Kit	**538513S**	6	63	12.1	110	29.8
Flexible Coupling Kit	**538514S**	6	50	12.1	100	34.5
Flexible Coupling	**538515**	6	38.5	19	120	
Flexible Coupling	**538518**	6	31	10	96	34.5
Flexible Coupling Kit	**538520S**	6	43.5	10	96	31.5
Flexible Coupling Kit	**538522S**	6	70	12.1	120	36

Propshaft

Basic Dimension Table GSP to Dimension……

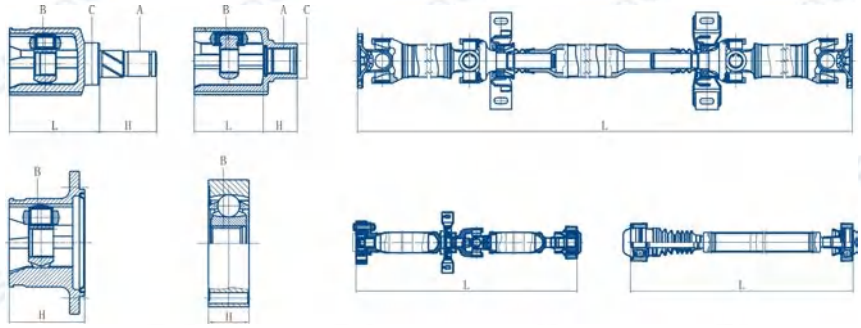

Product	GSP Ref.	BASIC DIMENSIONS(mm)					
		A	B	C	H	L	P
Propshaft	201406					835	
Propshaft	201782					862	
Propshaft	201958					598	
Propshaft	201972					707	
Propshaft	202065					336	
Propshaft	202067					234	
Propshaft	202068					209	
Propshaft	202069					404	
Propshaft	202070					302	
Propshaft	202071					297	
Propshaft	202072					259	
Propshaft	202101					859	
Propshaft	202102					768	
Propshaft	202280					778	
Propshaft	202281					867	
Propshaft	202398					321	
Propshaft	202439					709	
Propshaft	202440					835	
Propshaft	202441					712	
Propshaft	202442					793	
Propshaft	202443					762	
Propshaft	202521					773	
Propshaft	202522					764	
Propshaft	202537					950	
Propshaft	202538					955	
Propshaft	202539					920	
Propshaft	299302					780	
Propshaft	299303					760	
Propshaft	299304					727	
Joint,propshaft	601297		25			29	
Joint,propshaft	601384		20			54.5	
Joint,propshaft	601570		26			35	
Joint,propshaft	601681		33			34	
Joint,propshaft	601771		34			28	
Joint,propshaft	601910		30			26.8	
Joint,propshaft	602001		24			32	
Joint,propshaft	602051		22			22	
Joint,propshaft	602071		25			28	
Joint,propshaft	602077		33			32	
Joint,propshaft	602148		24			23.5	
Joint,propshaft	602448		25			32	
Joint,propshaft	602455		19			20	
Joint,propshaft	602469		25			27	
Joint,propshaft	602478		25			29	
Joint,propshaft	602494		34			30.5	
Joint,propshaft	602495		32			28	
Joint,propshaft	605057		32			28	
Joint,propshaft	605093		19			68.5	
Joint,propshaft	605119		20			30.5	
Joint,propshaft	605122		25			104	
Joint,propshaft	605129		25			32	

Propshaft

Basic Dimension Table GSP to Dimension……

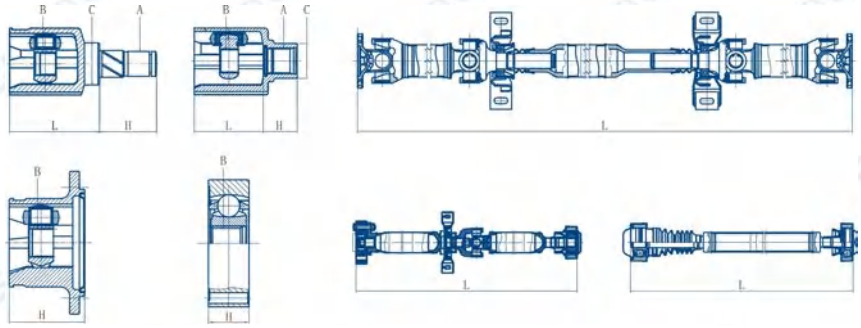

Product	GSP Ref.	BASIC DIMENSIONS(mm)					
		A	B	C	H	L	P
Joint,propshaft	605140		24			33.5	
Joint,propshaft	605143		24			33.5	
Joint,propshaft	605147		25			29	
Joint,propshaft	605158		32			28	
Joint,propshaft	605161		21			27.5	
Joint,propshaft	605168		30			26.8	
Joint,propshaft	605200		30			26.8	
Joint,propshaft	605202		21			26	
Joint,propshaft	606026		25			40	
Joint,propshaft	608072	17	22	36		119	
Joint,propshaft	608073	17	22	36		119	
Joint,propshaft	616005		25			40	
Joint,propshaft	616011		25			32	
Joint,propshaft	618001		25			32	
Joint,propshaft	630003		32			28	
Joint,propshaft	635008		24			23.5	
Joint,propshaft	635045		24			32	
Joint,propshaft	635046		25			26	
Joint,propshaft	635047		26			42	
Joint,propshaft	635056		28			32	
Joint,propshaft	635064		20			21	
Joint,propshaft	661093		25			27	
Joint,propshaft	661094		25			29	
Joint,propshaft	661100		26			35	
Joint,propshaft	699050		24			32	
Joint,propshaft	699117		22			88.5	
Joint,propshaft	699195		19			22.6	
Joint,propshaft	699196		25			32	
Joint,propshaft	699199		30			37	
Joint,propshaft	699217		32			28	
Joint,propshaft	699219		30			26.8	
Joint,propshaft	699229		26		40	49	
Joint,propshaft	699239		30			37	
Joint,propshaft	699240		30			33	
Joint,propshaft	699253		26			32	
Joint,propshaft	699257		23			52.6	
Joint,propshaft	699273		34			57	
Joint,propshaft	699274	17	22	36		119	
Joint,propshaft	801298		35			48.5	
Joint,propshaft	801302		30			43	
Joint,propshaft	801331		28			38	
Joint,propshaft	801349	30	27		104.5	53.5	
Joint,propshaft	802100		25			30	
Joint,propshaft	802210	26	21	45	70	52	
Joint,propshaft	802217		37			53.5	
Joint,propshaft	802222		34			64	
Joint,propshaft	804534		34			55	
Joint,propshaft	804544	26	30	60	86.5	64.5	
Joint,propshaft	808078	30	28	60	86	79	
Joint,propshaft	816010		25			30	
Joint,propshaft	816011		35			28.5	

Propshaft

Basic Dimension Table GSP to Dimension……

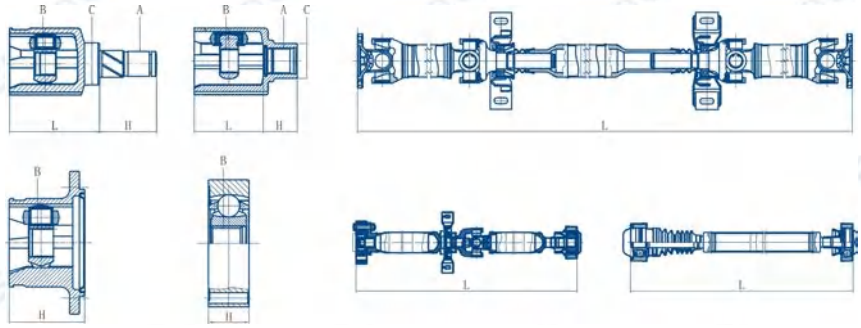

Product	GSP Ref.	BASIC DIMENSIONS(mm)					
		A	B	C	H	L	P
Joint,propshaft	835056		30			34.5	
Joint,propshaft	835068		21			27.5	
Joint,propshaft	899032		25			30	
Joint,propshaft	899297		25			30	
Propshaft	PS900002					647	
Propshaft	PS900100					2173	
Propshaft	PS900101					2108	
Propshaft	PS900102					2170	
Propshaft	PS900103					1478	
Propshaft	PS900104					1665	
Propshaft	PS900105					1763	
Propshaft	PS900106					1801	
Propshaft	PS900107					1493	
Propshaft	PS900108					1494	
Propshaft	PS900109					1438	
Propshaft	PS900110					1562	
Propshaft	PS900111					648	
Propshaft	PS900112					715	
Propshaft	PS900113					1353	
Propshaft	PS900114					1554	
Propshaft	PS900115					1393	
Propshaft	PS900116					1401	
Propshaft	PS900117					1423	
Propshaft	PS900118					1605	
Propshaft	PS900119					1437	
Propshaft	PS900120					1416	
Propshaft	PS900121					1568	
Propshaft	PS900122					718	
Propshaft	PS900123					1235	
Propshaft	PS900124					738	
Propshaft	PS900125					1477	
Propshaft	PS900126					1464	
Propshaft	PS900127					1619	
Propshaft	PS900128					644	
Propshaft	PS900129					1432	
Propshaft	PS900130					1597	
Propshaft	PS900131					1699	
Propshaft	PS900132					1760	
Propshaft	PS900133					1850	
Propshaft	PS900135					1580	
Propshaft	PS900136					1718	
Propshaft	PS900137					1597	
Propshaft	PS900138					730	
Propshaft	PS900139					808	
Propshaft	PS900140					1486	
Propshaft	PS900141					1428	
Propshaft	PS900142					1836	
Propshaft	PS900143					1846	
Propshaft	PS900144					1690	
Propshaft	PS900145					1828	
Propshaft	PS900147					1795	

Propshaft

Basic Dimension Table GSP to Dimension……

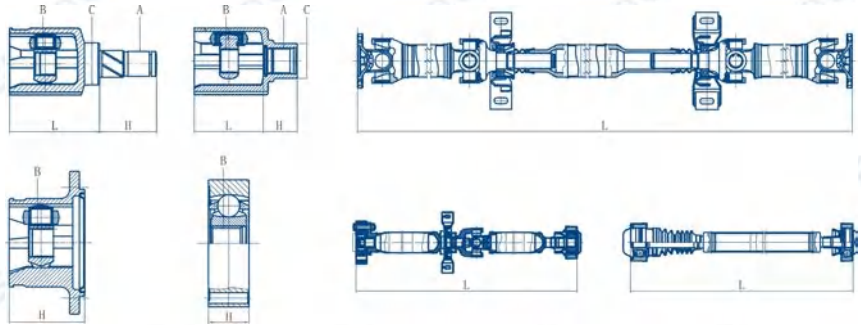

Product	GSP Ref.	BASIC DIMENSIONS(mm)					
		A	B	C	H	L	P
Propshaft	PS900148					1597	
Propshaft	PS900149					780	
Propshaft	PS900150					693	
Propshaft	PS900151					1314	
Propshaft	PS900152					1338	
Propshaft	PS900153					702	
Propshaft	PS900154					1269	
Propshaft	PS900155					709	
Propshaft	PS900156					1270	
Propshaft	PS900157					1254	
Propshaft	PS900158					705	
Propshaft	PS900159					709	
Propshaft	PS900160					1415	
Propshaft	PS900161					733	
Propshaft	PS900162					1494	
Propshaft	PS900163					1253	
Propshaft	PS900164					1280	
Propshaft	PS900165					1424	
Propshaft	PS900166					1376	
Propshaft	PS900167					1405	
Propshaft	PS900168					1400	
Propshaft	PS900169					1146	
Propshaft	PS900170					1159	
Propshaft	PS900171					1645	
Propshaft	PS900172					1545	
Propshaft	PS900173					1534	
Propshaft	PS900174					1861	
Propshaft	PS900175					683	
Propshaft	PS900176					1593	
Propshaft	PS900178					1674	
Propshaft	PS900179					1468	
Propshaft	PS900180					2389	
Propshaft	PS900182					1932	
Propshaft	PS900184					2090	
Propshaft	PS900185					810	
Propshaft	PS900186					769	
Propshaft	PS900187					984	
Propshaft	PS900188					887	
Propshaft	PS900190					2227	
Propshaft	PS900191					2158	
Propshaft	PS900193					659	
Propshaft	PS900194					1429	
Propshaft	PS900195					513	
Propshaft	PS900196					496	
Propshaft	PS900197					624	
Propshaft	PS900198					639	
Propshaft	PS900199					444	
Propshaft	PS900200					1697	
Propshaft	PS900201					2130	
Propshaft	PS900202					720	
Propshaft	PS900203					651	

Propshaft

Basic Dimension Table GSP to Dimension……

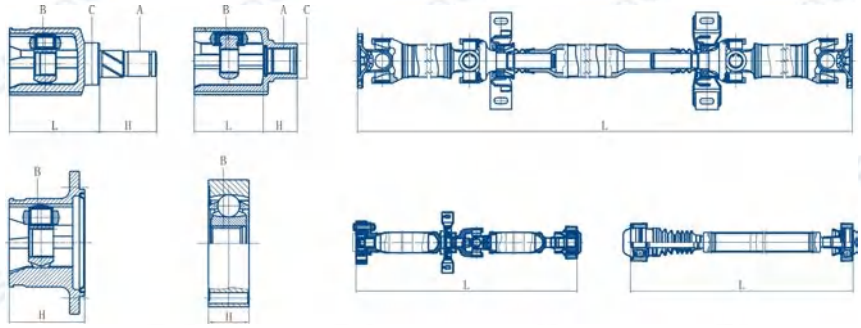

Product	GSP Ref.	BASIC DIMENSIONS(mm)					
		A	B	C	H	L	P
Propshaft	PS900204					809	
Propshaft	PS900206					1592	
Propshaft	PS900208					2299	
Propshaft	PS900209					857	
Propshaft	PS900210					840	
Propshaft	PS900211					735	
Propshaft	PS900212					861	
Propshaft	PS900215					786	
Propshaft	PS900216					801	
Propshaft	PS900218					747	
Propshaft	PS900220					661	
Propshaft	PS900221					606	
Propshaft	PS900222					1726	
Propshaft	PS900223					2116	
Propshaft	PS900224					2033	
Propshaft	PS900225					1946	
Propshaft	PS900229					1300	
Propshaft	PS900230					958	
Propshaft	PS900234					2668	
Propshaft	PS900235					2808	
Propshaft	PS900236					2035	
Propshaft	PS900237					989	
Propshaft	PS900239					747	
Propshaft	PS900240					2122	
Propshaft	PS900241					2015	
Propshaft	PS900244					2238	
Propshaft	PS900245					725	
Propshaft	PS900249					2075	
Propshaft	PS900250					2051	
Propshaft	PS900251					2098	
Propshaft	PS900252					2058	
Propshaft	PS900254					1968	
Propshaft	PS900255					2122	
Propshaft	PS900256					2200	
Propshaft	PS900258					1368	
Propshaft	PS900260					2204	
Propshaft	PS900264					2068	
Propshaft	PS900265					1925	
Propshaft	PS900266					1955	
Propshaft	PS900267					2041	
Propshaft	PS900268					2005	
Propshaft	PS900269					1943	
Propshaft	PS900271					1956	
Propshaft	PS900272					1986	
Propshaft	PS900273					1958	
Propshaft	PS900274					921	
Propshaft	PS900275					903	
Propshaft	PS900276					780	
Propshaft	PS900279					756	
Propshaft	PS900280					805	
Propshaft	PS900281					1210	

Propshaft

Basic Dimension Table GSP to Dimension……

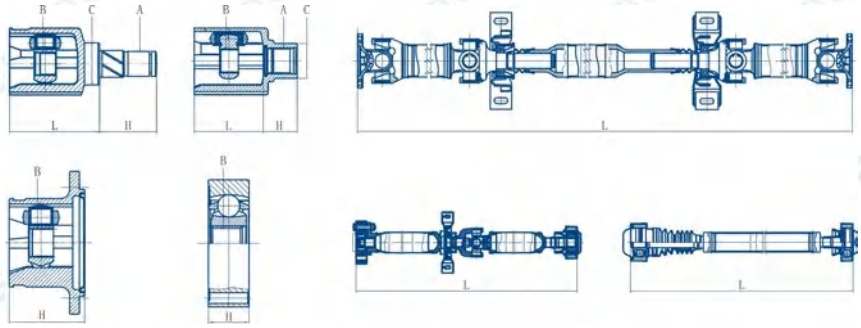

Product	GSP Ref.	BASIC DIMENSIONS(mm)					
		A	B	C	H	L	P
Propshaft	PS900284					1220	
Propshaft	PS900291					645	
Propshaft	PS900292					740	
Propshaft	PS900298					446	
Propshaft	PS900299					423	
Propshaft	PS900300					977	
Propshaft	PS900301					1003	
Propshaft	PS900302					485	
Propshaft	PS900303					2023	
Propshaft	PS900306					1529	
Propshaft	PS900308					2045	
Propshaft	PS900309					671	
Propshaft	PS900310					650	
Propshaft	PS900311					638	
Propshaft	PS900312					1112	
Propshaft	PS900313					649	
Propshaft	PS900314					634	
Propshaft	PS900315					684	
Propshaft	PS900316					1015	
Propshaft	PS900318					1070	
Propshaft	PS900319					838	
Propshaft	PS900320					823	
Propshaft	PS900321					604	
Propshaft	PS900324					688	
Propshaft	PS900325					1295	
Propshaft	PS900326					604	
Propshaft	PS900327					859	
Propshaft	PS900328					748	
Propshaft	PS900329					969	
Propshaft	PS900330					816	
Propshaft	PS900331					880	
Propshaft	PS900332					1997	
Propshaft	PS900333					657	
Propshaft	PS900334					750	
Propshaft	PS900335					1261	
Propshaft	PS900336					2002	
Propshaft	PS900337					1150	
Propshaft	PS900338					745	
Propshaft	PS900339					1272	
Propshaft	PS900340					2143	
Propshaft	PS900342					1048	
Propshaft	PS900345					616	
Propshaft	PS900346					628	
Propshaft	PS900347					2077	
Propshaft	PS900348					669	
Propshaft	PS900349					579	
Propshaft	PS900350					609	
Propshaft	PS900351					610	
Propshaft	PS900352					674	
Propshaft	PS900353					550	
Propshaft	PS900354					744	

Propshaft

Basic Dimension Table GSP to Dimension……

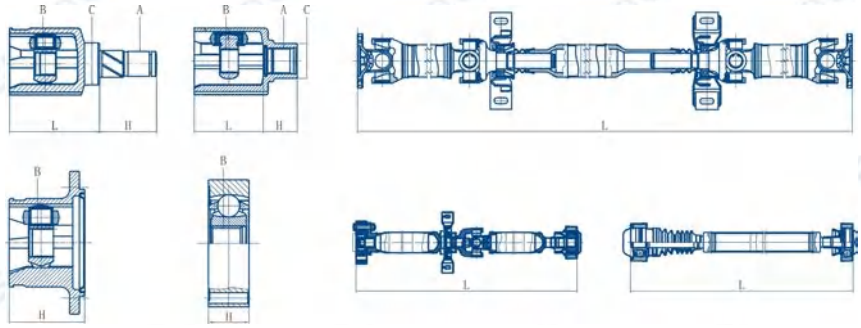

Product	GSP Ref.	BASIC DIMENSIONS(mm)					
		A	B	C	H	L	P
Propshaft	PS900355					696	
Propshaft	PS900356					684	
Propshaft	PS900357					671	
Propshaft	PS900359					657	
Propshaft	PS900363					1382	
Propshaft	PS900364					642	
Propshaft	PS900365					920	
Propshaft	PS900366					950	
Propshaft	PS900367					2579	
Propshaft	PS900368					2840	
Propshaft	PS900369					2752	
Propshaft	PS900370					2805	
Propshaft	PS900372					2686	
Propshaft	PS900373					2720	
Propshaft	PS900376					2240	
Propshaft	PS900377					2469	
Propshaft	PS900378					2211	
Propshaft	PS900379					2440	
Propshaft	PS900380					2143	
Propshaft	PS900381					2372	
Propshaft	PS900382					2174.5	
Propshaft	PS900383					2403.5	
Propshaft	PS900384					2174.5	
Propshaft	PS900385					2403.5	
Propshaft	PS900386					1951	
Propshaft	PS900387					2180	
Propshaft	PS900388					1903	
Propshaft	PS900389					2132	
Propshaft	PS900390					2139	
Propshaft	PS900391					2372	
Propshaft	PS900392					2399	
Propshaft	PS900393					2171	
Propshaft	PS900397					657	
Propshaft	PS900399					1469	
Propshaft	PS900400					2033	
Propshaft	PS900401					2060	
Propshaft	PS900402					863	
Propshaft	PS900410					839	
Propshaft	PS900411					1104	
Propshaft	PS900413					919	
Propshaft	PS900414					1004	
Propshaft	PS900417					920	
Propshaft	PS900418					940	
Propshaft	PS900419					955	
Propshaft	PS900420					890	
Propshaft	PS900421					882	
Propshaft	PS900431					657	
Propshaft	PS900432					993	
Propshaft	PS900433					2188	
Propshaft	PS900434					790	
Propshaft	PS900435					1210	

Propshaft

Basic Dimension Table GSP to Dimension……

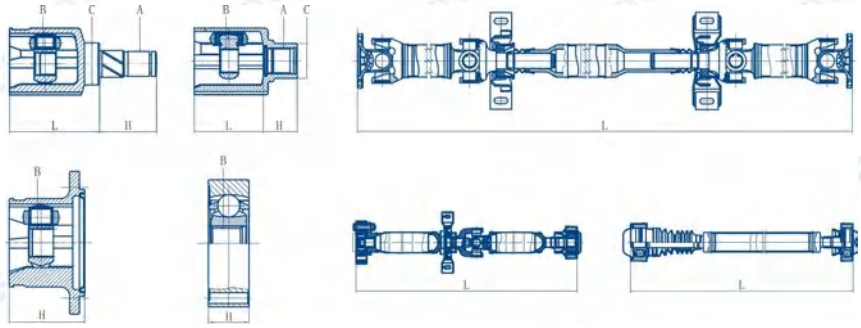

Product	GSP Ref.	BASIC DIMENSIONS(mm)					
		A	B	C	H	L	P
Propshaft	PS900436					624	
Propshaft	PS900437					2041	
Propshaft	PS900438					2219	
Propshaft	PS900439					672	
Propshaft	PS900441					767	
Propshaft	PS900442					832	
Propshaft	PS900445					1961	
Propshaft	PS900446					1979	
Propshaft	PS900447					2020	
Propshaft	PS900450					1496	
Propshaft	PS900451					1976	
Propshaft	PS900453					1991	
Propshaft	PS900454					1936	
Propshaft	PS900455					2071	
Propshaft	PS900456					1964	
Propshaft	PS900457					2078	
Propshaft	PS900458					638	
Propshaft	PS900459					630	
Propshaft	PS900460					1526	
Propshaft	PS900461					1551	
Propshaft	PS900462					1525	
Propshaft	PS900463					1574	
Propshaft	PS900464					1561	
Propshaft	PS900465					1980	
Propshaft	PS900466					734	
Propshaft	PS900467					1184	
Propshaft	PS900468					718	
Propshaft	PS900469					1019	
Propshaft	PS900470					476	
Propshaft	PS900472					628	
Propshaft	PS900476					2316	
Propshaft	PS900477					2235	
Propshaft	PS900478					607	
Propshaft	PS900479					597	
Propshaft	PS900480					607	
Propshaft	PS900481					1616	
Propshaft	PS900482					1570	
Propshaft	PS900483					736	
Propshaft	PS900484					1375	
Propshaft	PS900485					1214	
Propshaft	PS900486					1324	
Propshaft	PS900487					1434	
Propshaft	PS900489					609	
Propshaft	PS900490					649	
Propshaft	PS900492					1966	
Propshaft	PS900493					2273	
Propshaft	PS900496					2556	
Propshaft	PS900497					2535	
Propshaft	PS900498					707	
Propshaft	PS900499					1658	
Propshaft	PS900500					710	

Propshaft

Basic Dimension Table GSP to Dimension……

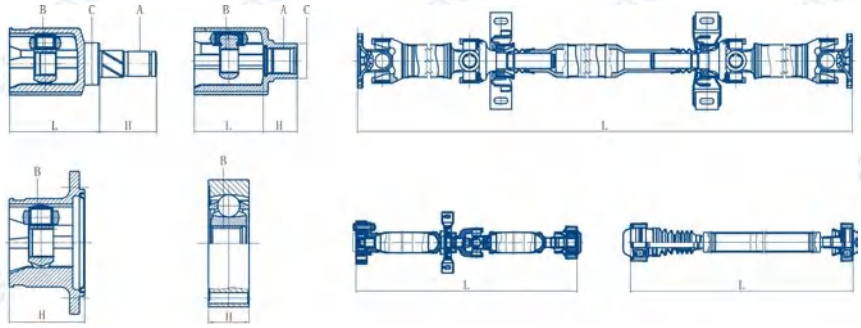

Product	GSP Ref.	BASIC DIMENSIONS(mm)					
		A	B	C	H	L	P
Propshaft	PS900501					780	
Propshaft	PS900502					2272	
Propshaft	PS900503					2248	
Propshaft	PS900504					1755	
Propshaft	PS900505					2196	
Propshaft	PS900506					2165	
Propshaft	PS900507					2207	
Propshaft	PS900508					2111	
Propshaft	PS900509					2136	
Propshaft	PS900510					2136	
Propshaft	PS900511					2130	
Propshaft	PS900512					2153	
Propshaft	PS900513					2070	
Propshaft	PS900514					2139	
Propshaft	PS900515					2228	
Propshaft	PS900516					2114	
Propshaft	PS900517					2270	
Propshaft	PS900519					2216	
Propshaft	PS900520					2138	
Propshaft	PS900522					670	
Propshaft	PS900523					1425	
Propshaft	PS900525					612	
Propshaft	PS900526					678	
Propshaft	PS900527					1225	
Propshaft	PS900528					1165	
Propshaft	PS900530					721	
Propshaft	PS900536					1287	
Propshaft	PS900537					1350	
Propshaft	PS900543					1923	
Propshaft	PS900544					1275	
Propshaft	PS900548					671	
Propshaft	PS900549					750	
Propshaft	PS900550					2783	
Propshaft	PS900551					2165	
Propshaft	PS900552					1476	
Propshaft	PS900557					2071	
Propshaft	PS900558					2554	
Propshaft	PS900559					2580	
Propshaft	PS900560					1503	
Propshaft	PS900561					683	
Propshaft	PS900562					1978	
Propshaft	PS900563					1522	
Propshaft	PS900564					1605	
Propshaft	PS900565					1758	
Propshaft	PS900566					1644	
Propshaft	PS900567					2156	
Propshaft	PS900568					949	
Propshaft	PS900569					1920	
Propshaft	PS900570					1519	
Propshaft	PS900571					1610	
Propshaft	PS900572					1858	

Propshaft

Basic Dimension Table GSP to Dimension……

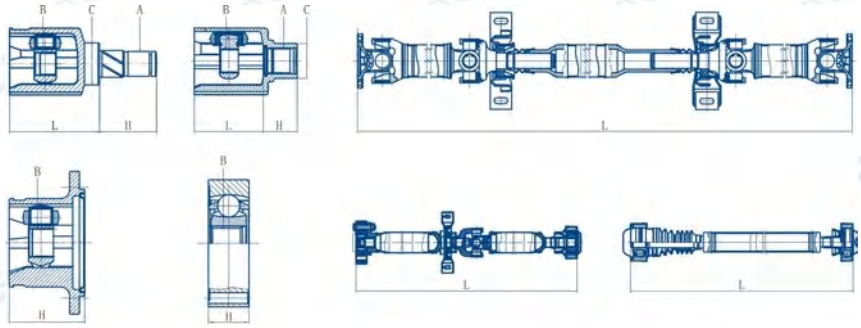

Product	GSP Ref.	BASIC DIMENSIONS(mm)					
		A	B	C	H	L	P
Propshaft	PS900573					1579	
Propshaft	PS900576					705	
Propshaft	PS900577					750	
Propshaft	PS900580					1560	
Propshaft	PS900581					1579	
Propshaft	PS900582					764	
Propshaft	PS900583					1422	
Propshaft	PS900584					2176	
Propshaft	PS900585					2213	
Propshaft	PS900586					622	
Propshaft	PS900589					979	
Propshaft	PS900590					1628	
Propshaft	PS900591					1449	
Propshaft	PS900592					1419	
Propshaft	PS900593					1472	
Propshaft	PS900594					1915	
Propshaft	PS900595					1670	
Propshaft	PS900596					637	
Propshaft	PS900598					1101	
Propshaft	PS900599					637	
Propshaft	PS900600					1157	
Propshaft	PS900601					1124	
Propshaft	PS900603					1172	
Propshaft	PS900604					622	
Propshaft	PS900605					651	
Propshaft	PS900606					627	
Propshaft	PS900607					604	
Propshaft	PS900608					835	
Propshaft	PS900609					889	
Propshaft	PS900610					1417	
Propshaft	PS900611					1327	
Propshaft	PS900612					999	
Propshaft	PS900613					1369	
Propshaft	PS900614					605	
Propshaft	PS900615					3040	
Propshaft	PS900616					2357	
Propshaft	PS900617					2804	
Propshaft	PS900618					1802	
Propshaft	PS900619					2140	
Propshaft	PS900620					681	
Propshaft	PS900621					2090	
Propshaft	PS900622					1396	
Propshaft	PS900623					2191	
Propshaft	PS900624					2001	
Propshaft	PS900625					1423	
Propshaft	PS900627					1230	
Propshaft	PS900628					2272	
Propshaft	PS900629					1001	
Propshaft	PS900630					1260	
Propshaft	PS900631					891	
Propshaft	PS900632					830	

Propshaft

Basic Dimension Table GSP to Dimension……

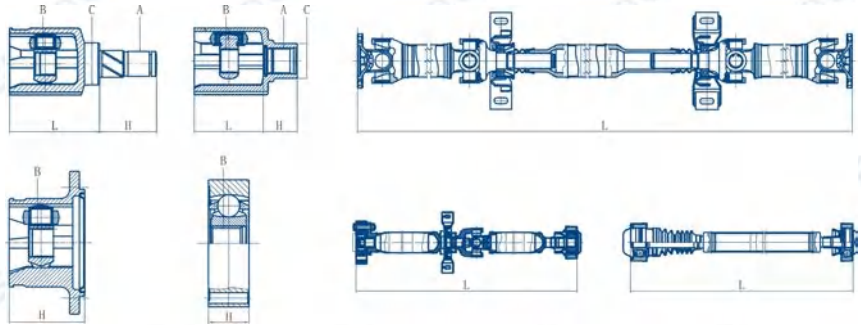

Product	GSP Ref.	BASIC DIMENSIONS(mm)					
		A	B	C	H	L	P
Propshaft	PS900633					1290	
Propshaft	PS900634					2372	
Propshaft	PS900635					1653	
Propshaft	PS901341					1970	
Propshaft	PS901342					1602	
Propshaft	PS901343					1923	
Propshaft	PS901344					605	
Propshaft	PS901346					2038	
Propshaft	PS901347					1610	
Propshaft	PS901348					1690	
Propshaft	PS901350					1504	
Propshaft	PS901351					787	
Propshaft	PS901352					805	
Propshaft	PS901354					670	
Propshaft	PS901355					646	
Propshaft	PS901356					1550	
Propshaft	PS901357					686	
Propshaft	PS901358					2386	
Propshaft	PS901359					2825	
Propshaft	PS901360					1562	
Propshaft	PS901361					2179	
Propshaft	PS901362					2748	
Propshaft	PS901363					2736	
Propshaft	PS901364					2767	
Propshaft	PS901365					2814	
Propshaft	PS901366					2775	
Propshaft	PS901367					2428	
Propshaft	PS901368					2554	
Propshaft	PS901369					2554	
Propshaft	PS901370					2399	
Propshaft	PS901371					1680	
Propshaft	PS901372					1535	
Propshaft	PS901373					1677	
Propshaft	PS901375					811	
Propshaft	PS901376					759	
Propshaft	PS901377					851	
Propshaft	PS901378					603	
Propshaft	PS901379					679	
Propshaft	PS901381					978	
Propshaft	PS901382					1251	
Propshaft	PS901383					1411	
Propshaft	PS901384					1469	
Propshaft	PS901385					1728	
Propshaft	PS901386					1576	
Propshaft	PS901387					2522	
Propshaft	PS901388					2225	
Propshaft	PS901389					980	
Propshaft	PS901390					1044	
Propshaft	PS901391					1138	
Propshaft	PS901392					1564	
Propshaft	PS901393					1604	

Propshaft

Basic Dimension Table GSP to Dimension……

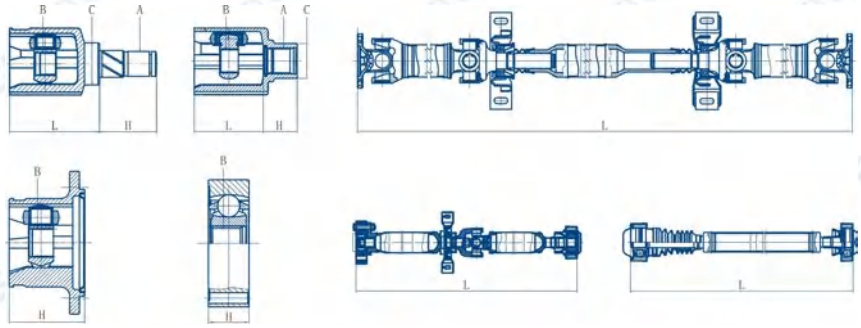

Product	GSP Ref.	BASIC DIMENSIONS(mm)					
		A	B	C	H	L	P
Propshaft	PS901394					1653	
Propshaft	PS901395					1875	
Propshaft	PS901396					1492	
Propshaft	PS901397					1592	
Propshaft	PS901398					773	
Propshaft	PS901399					2183	
Propshaft	PS901400					1627	
Propshaft	PS901401					1948	
Propshaft	PS901402					1990	
Propshaft	PS901403					1760	
Propshaft	PS901404					1757	
Propshaft	PS901405					1874	
Propshaft	PS901406					1591	
Propshaft	PS901407					836	
Propshaft	PS901408					1547	
Propshaft	PS901409					651	
Propshaft	PS901410					1983	
Propshaft	PS901411					1852	
Propshaft	PS901412					1951	
Propshaft	PS901413					1256	
Propshaft	PS901414					1355	
Propshaft	PS901415					1846	
Propshaft	PS901416					1665	
Propshaft	PS901417					1433	
Propshaft	PS901418					1417	
Propshaft	PS901419					1493	
Propshaft	PS901420					1434	
Propshaft	PS901421					1565	
Propshaft	PS901422					1604	
Propshaft	PS901423					1902	
Propshaft	PS901424					1872	
Propshaft	PS901425					2196	
Propshaft	PS901426					2091	
Propshaft	PS901427					2000	
Propshaft	PS901428					2185	
Propshaft	PS901429					1787	
Propshaft	PS901430					1069	
Propshaft	PS901431					1537	
Propshaft	PS901432					1492	
Propshaft	PS901433					1252	
Propshaft	PS901434					1219	
Propshaft	PS901435					1415	
Propshaft	PS901436					1596	
Propshaft	PS901437					1597	
Propshaft	PS901438					1415	
Propshaft	PS901439					1376	
Propshaft	PS901440					1335	
Propshaft	PS901441					2084	
Propshaft	PS901442					1000	
Propshaft	PS901443					2097	
Propshaft	PS901444					858	

Propshaft

Basic Dimension Table GSP to Dimension……

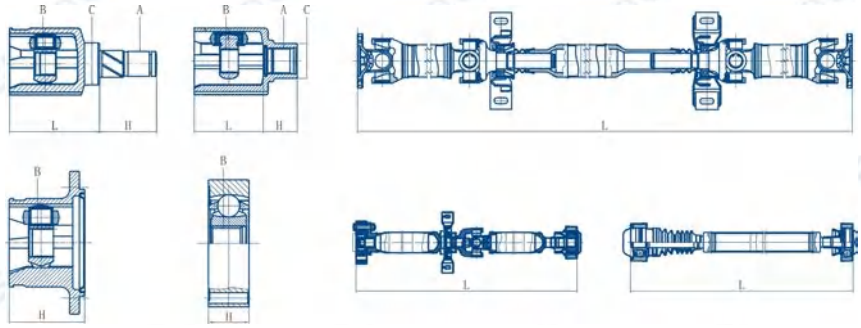

Product	GSP Ref.	BASIC DIMENSIONS(mm)					
		A	B	C	H	L	P
Propshaft	PS901445					3412	
Propshaft	PS901446					879	
Propshaft	PS901447					786	
Propshaft	PS901448					862	
Propshaft	PS901449					937	
Propshaft	PS901450					1891	
Propshaft	PS901451					1933	
Propshaft	PS901452					728	
Propshaft	PS901453					675	
Propshaft	PS901454					1744	
Propshaft	PS901455					1782	
Propshaft	PS901456					1533	
Propshaft	PS901457					2229	
Propshaft	PS901458					2208	
Propshaft	PS901459					1856	
Propshaft	PS901460					1288	
Propshaft	PS901461					699	
Propshaft	PS901462					630	
Propshaft	PS901463					726	
Propshaft	PS901464					844	
Propshaft	PS901465					1993	
Propshaft	PS901466					2314	
Propshaft	PS901467					2083	
Propshaft	PS901468					2153	
Propshaft	PS901469					2094	
Propshaft	PS901470					2066	
Propshaft	PS901471					2066	
Propshaft	PS901472					2066	
Propshaft	PS901473					1541	
Propshaft	PS901474					1205	
Propshaft	PS901475					1254	
Propshaft	PS901476					1403	
Propshaft	PS901477					1360	
Propshaft	PS901478					1571	
Propshaft	PS901479					1716	
Propshaft	PS901480					1821	
Propshaft	PS901481					1923	
Propshaft	PS901482					1661	
Propshaft	PS901483					1664	
Propshaft	PS901484					1556	
Propshaft	PS901485					1622	
Propshaft	PS901487					2298	
Propshaft	PS901488					2070	
Propshaft	PS901489					1355	
Propshaft	PS901490					1318	
Propshaft	PS901491					1458	
Propshaft	PS901492					1185	
Propshaft	PS901493					1609	
Propshaft	PS901494					1420	
Propshaft	PS901495					1443	
Propshaft	PS901496					1425	

Propshaft

Basic Dimension Table GSP to Dimension……

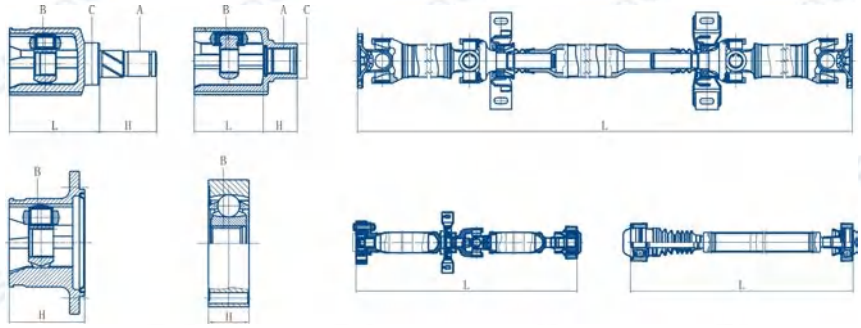

Product	GSP Ref.	BASIC DIMENSIONS(mm)					
		A	B	C	H	L	P
Propshaft	PS901497					1408	
Propshaft	PS901498					1581	
Propshaft	PS901499					1680	
Propshaft	PS901500					1465	
Propshaft	PS901501					1597	
Propshaft	PS901502					1628	
Propshaft	PS901503					1648	
Propshaft	PS901504					1452	
Propshaft	PS901505					1594	
Propshaft	PS901506					1785	
Propshaft	PS901507					1825	
Propshaft	PS901508					1165	
Propshaft	PS901509					1595	
Propshaft	PS901510					1595	
Propshaft	PS901511					1981	
Propshaft	PS901512					744	
Propshaft	PS901513					1630	
Propshaft	PS901514					1706	
Propshaft	PS901515					1749	
Propshaft	PS901516					1854	
Propshaft	PS901517					2260	
Propshaft	PS901518					2115	
Propshaft	PS901519					1097	
Propshaft	PS901520					1152	
Propshaft	PS901521					1393	
Propshaft	PS901522					1545	
Propshaft	PS901523					1603	
Propshaft	PS901524					1562	
Propshaft	PS901525					1234	
Propshaft	PS901526					1249	
Propshaft	PS901527					1577.5	
Propshaft	PS901528					922	
Propshaft	PS901529					1220	
Propshaft	PS901530					1559	
Propshaft	PS901531					1203	
Propshaft	PS901532					1568	
Propshaft	PS901533					1575	
Propshaft	PS901534					1605	
Propshaft	PS901535					1466	
Propshaft	PS901536					1686	
Propshaft	PS901537					812	
Propshaft	PS901538					1070	
Propshaft	PS901539					908	
Propshaft	PS901540					1543	
Propshaft	PS901541					954	
Propshaft	PS901542					1119	
Propshaft	PS901543					745	
Propshaft	PS901544					1195	
Propshaft	PS901545					1540	
Propshaft	PS901546					1370	
Propshaft	PS901547					1472	

Propshaft

Basic Dimension Table GSP to Dimension……

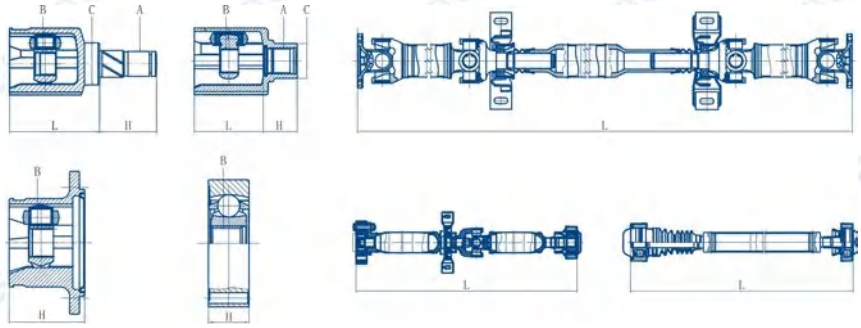

Product	GSP Ref.	BASIC DIMENSIONS(mm)					
		A	B	C	H	L	P
Propshaft	PS901548					1401	
Propshaft	PS901549					1586	
Propshaft	PS901550					1213	
Propshaft	PS901551					2074	
Propshaft	PS901552					1646	
Propshaft	PS901553					1748	
Propshaft	PS901554					1668	
Propshaft	PS901555					2154	
Propshaft	PS901556					2094	
Propshaft	PS901557					2148	
Propshaft	PS901558					2041	
Propshaft	PS901559					1988	
Propshaft	PS901560					2191	
Propshaft	PS901561					973	
Propshaft	PS901562					1171	
Propshaft	PS901563					978	
Propshaft	PS901564					1131	
Propshaft	PS901565					1196	
Propshaft	PS901566					938	
Propshaft	PS901567					924	
Propshaft	PS901568					1035	
Propshaft	PS901569					1257	
Propshaft	PS901570					1220	
Propshaft	PS901571					1407	
Propshaft	PS901573					1375	
Propshaft	PS901574					1202	
Propshaft	PS901575					1126	
Propshaft	PS901576					1371	
Propshaft	PS901577					910	
Propshaft	PS901578					1119	
Propshaft	PS901579					854	
Propshaft	PS901580					675	
Propshaft	PS901581					471	
Propshaft	PS901582					480	
Propshaft	PS901583					633	
Propshaft	PS901584					1462	
Propshaft	PS901585					2152	
Propshaft	PS901586					1972	
Propshaft	PS901587					1062	
Propshaft	PS901588					662	
Propshaft	PS901589					667	
Propshaft	PS901591					2574	
Propshaft	PS901593					1415	
Propshaft	PS901594					790	
Propshaft	PS901595					771	
Propshaft	PS901596					2182	
Propshaft	PS901597					1167	
Propshaft	PS901598					1174	
Propshaft	PS901599					2323	
Propshaft	PS901600					2148	
Propshaft	PS901601					2215	

Propshaft

Basic Dimension Table GSP to Dimension……

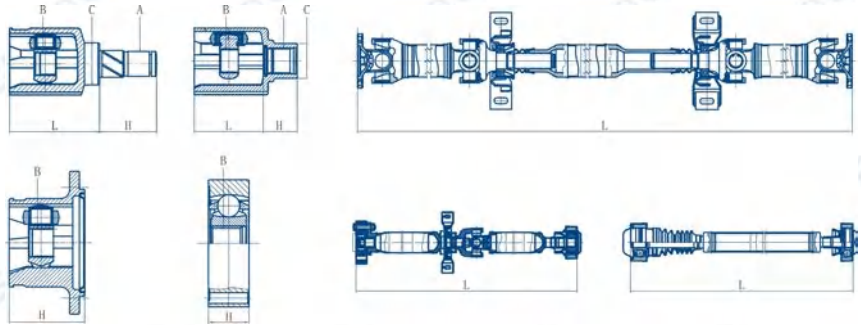

Product	GSP Ref.	BASIC DIMENSIONS(mm)					
		A	B	C	H	L	P
Propshaft	PS901602					887	
Propshaft	PS901603					772	
Propshaft	PS901604					1559	
Propshaft	PS901605					1618	
Propshaft	PS901606					1449	
Propshaft	PS901607					1449	
Propshaft	PS901608					1450	
Propshaft	PS901609					1618	
Propshaft	PS901610					1581	
Propshaft	PS901611					1559	
Propshaft	PS901612					1466	
Propshaft	PS901613					1549	
Propshaft	PS901614					1719	
Propshaft	PS901615					1664	
Propshaft	PS901616					1719	
Propshaft	PS901617					1640	
Propshaft	PS901618					1460	
Propshaft	PS901619					1664	
Propshaft	PS901620					1149	
Propshaft	PS901621					1186	
Propshaft	PS901622					697	
Propshaft	PS901623					1446	
Propshaft	PS901624					1640	
Propshaft	PS901625					687	
Propshaft	PS901626					1230	
Propshaft	PS901627					2358	
Propshaft	PS901628					2025	
Propshaft	PS901629					2000	
Propshaft	PS901630					756	
Propshaft	PS901631					1696	
Propshaft	PS901632					740	
Propshaft	PS901633					2409	
Propshaft	PS901634					1350	
Propshaft	PS901635					1361	
Propshaft	PS901636					1392	
Propshaft	PS901637					1540	
Propshaft	PS901638					1448	
Propshaft	PS901639					1372	
Propshaft	PS901640					1510	
Propshaft	PS901641					2058	
Propshaft	PS901642					1037	
Propshaft	PS901643					1570	
Propshaft	PS901644					1140	
Propshaft	PS901645					1328	
Propshaft	PS901646					1267	
Propshaft	PS901647					2065	
Propshaft	PS901648					2064	
Propshaft	PS901649					1346	
Propshaft	PS901650					2181	
Propshaft	PS901651					2032	
Propshaft	PS901652					1237	

Propshaft

Basic Dimension Table GSP to Dimension……

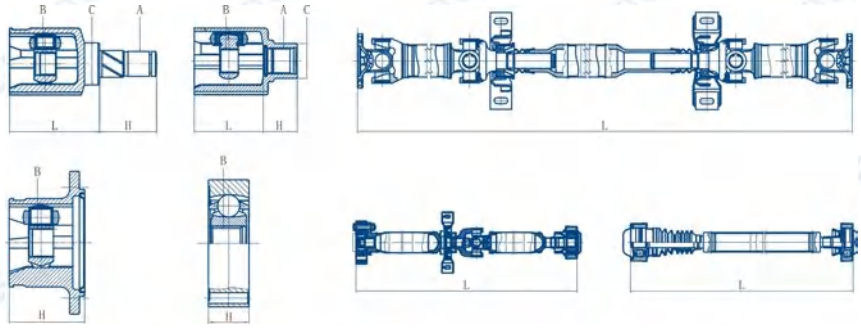

Product	GSP Ref.	BASIC DIMENSIONS(mm)					
		A	B	C	H	L	P
Propshaft	PS901655					1469	
Propshaft	PS901656					1373	
Propshaft	PS901657					1425	
Propshaft	PS901658					1598	
Propshaft	PS901659					1570	
Propshaft	PS901660					1383	
Propshaft	PS901661					1905	
Propshaft	PS901662					2239	
Propshaft	PS901663					715	
Propshaft	PS901664					1721	
Propshaft	PS901665					2024	
Propshaft	PS901666					2065	
Propshaft	PS901667					2110	
Propshaft	PS901668					2026	
Propshaft	PS901669					1500	
Propshaft	PS901670					722	
Propshaft	PS901671					769	
Propshaft	PS901672					710	
Propshaft	PS901673					2562	
Propshaft	PS901674					853	
Propshaft	PS901675					1136	
Propshaft	PS901676					2066	
Propshaft	PS901681					748	
Propshaft	PS901682					1572	
Propshaft	PS901683					2113	
Propshaft	PS901684					2781	
Propshaft	PS901685					2748	
Propshaft	PS901686					2097	
Propshaft	PS901687					1251	
Propshaft	PS901688					1106	
Propshaft	PS901689					1503	
Propshaft	PS901690					2152	
Propshaft	PS901691					1843	
Propshaft	PS901702					1345	
Propshaft	PS901703					678	
Propshaft	PS901704					1041	
Propshaft	PS901705					2351	
Propshaft	PS901706					1536	
Propshaft	PS901708					2719	
Propshaft	PS901709					1499	
Propshaft	PS901715					2104	
Propshaft	PS901716					947	
Propshaft	PS901717					1385	
Propshaft	PS901718					2050	
Propshaft	PS901720					1505	
Propshaft	PS901721					1376	
Propshaft	PS901722					2092	
Propshaft	PS901723					1986	
Propshaft	PS901724					1592	
Propshaft	PS901725					1844	
Propshaft	PS901727					1445	

Propshaft

Basic Dimension Table GSP to Dimension……

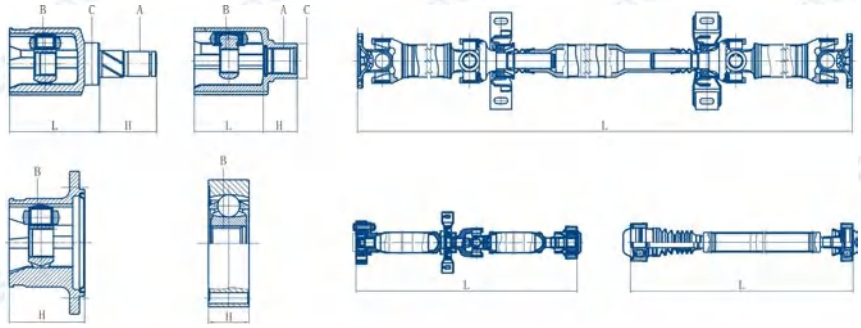

Product	GSP Ref.	BASIC DIMENSIONS(mm)					
		A	B	C	H	L	P
Propshaft	PS901729					2168	
Propshaft	PS901733					968	
Propshaft	PS901735					1398	
Propshaft	PS901738					1638	
Propshaft	PS901739					1656	
Propshaft	PS901740					1575	
Propshaft	PS901741					1713	
Propshaft	PS901742					1678	
Propshaft	PS901744					1065	
Propshaft	PS901745					1449	
Propshaft	PS901746					1792	
Propshaft	PS901747					1696	
Propshaft	PS901748					2310	
Propshaft	PS901749					2347	
Propshaft	PS901750					1345	
Propshaft	PS901751					1490	
Propshaft	PS901752					1018	
Propshaft	PS901753					724	
Propshaft	PS901754					770	
Propshaft	PS901755					2302	
Propshaft	PS901756					1807	
Propshaft	PS901787					1852	
Propshaft	PS901811					854	
Propshaft	PS901816					602	
Propshaft	PS901818					1988	
Propshaft	PS901819					969	
Propshaft	PS901820					1151	
Propshaft	PS901821					605	
Propshaft	PS901822					546	
Propshaft	PS901824					1894	
Propshaft	PS901825					1611	
Propshaft	PS901826					1150	
Propshaft	PS901827					621	
Propshaft	PS901828					2816	
Propshaft	PS901829					2394	
Propshaft	PS901832					1576	
Propshaft	PS901840					1646	
Propshaft	PS901848					2095	
Propshaft	PS901849					1347	
Propshaft	PS901850					695	
Propshaft	PS901855					2313	
Propshaft	PS901857					2396	
Propshaft	PS901858					2401	
Propshaft	PS901863					2299	
Propshaft	PS901868					1256	
Propshaft	PS901874					1600	
Propshaft	PS901877					1195	
Propshaft	PS901879					753	
Propshaft	PS901881					996	
Propshaft	PS901882					730	
Propshaft	PS901884					554	

Propshaft

Basic Dimension Table GSP to Dimension……

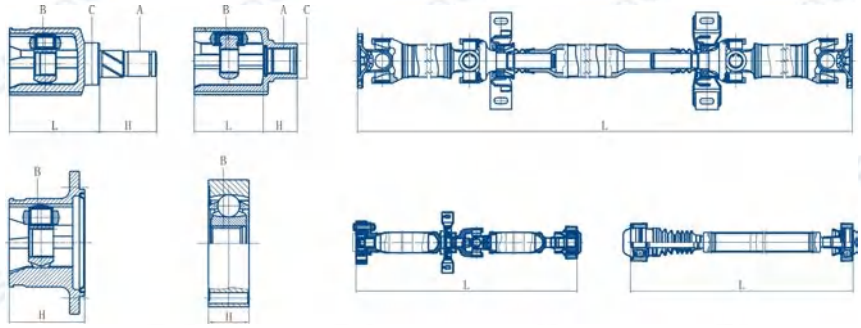

Product	GSP Ref.	BASIC DIMENSIONS(mm)					
		A	B	C	H	L	P
Propshaft	PS901893					777	
Propshaft	PS901894					1650	
Propshaft	PS901895					1166	
Propshaft	PS901904					1667	
Propshaft	PS901905					680	
Propshaft	PS901909					673	
Propshaft	PS901914					2278	
Propshaft	PS901915					2093	
Propshaft	PS901918					2239	
Propshaft	PS901920					2191	
Propshaft	PS901922					743	
Propshaft	PS901923					1600	
Propshaft	PS901927					580	
Propshaft	PS901928					945	
Propshaft	PS901929					1616	
Propshaft	PS901932					1315	
Propshaft	PS901933					1203	
Propshaft	PS901948					1535	
Propshaft	PS901949					896	
Propshaft	PS901951					1490	
Propshaft	PS901952					2106	
Propshaft	PS901954					1438	
Propshaft	PS901955					1563	
Propshaft	PS901965					2739	
Propshaft	PS901966					2305	
Propshaft	PS901967					1816	
Propshaft	PS901969					1496	
Propshaft	PS901970					1801	
Propshaft	PS901971					1880	
Propshaft	PS901982					1791	
Propshaft	PS901983					2769	
Propshaft	PS901984					1548	
Propshaft	PS901986					2839	

Universal Joint Types

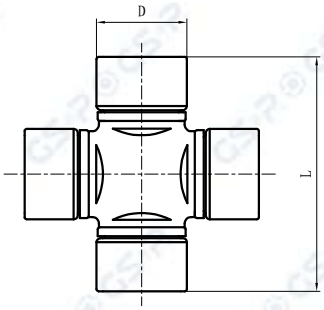

Type 1

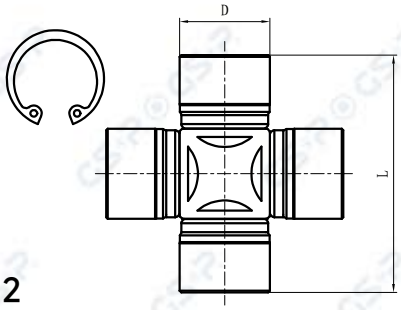

Type 2

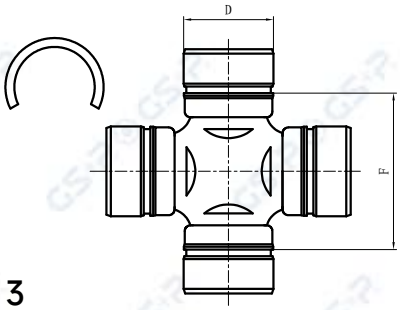

Type 3

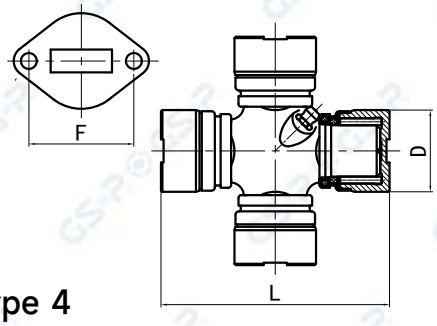

Type 4

Universal Joint Types

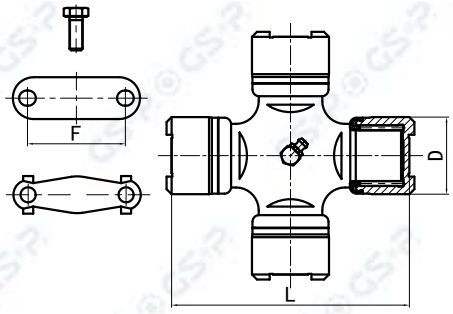

Type 5

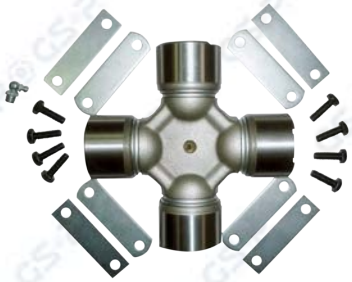

Lubricator Types

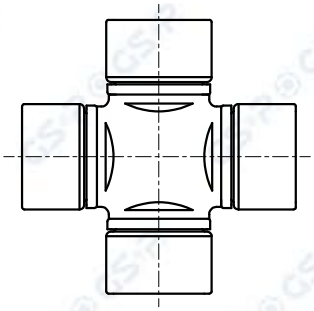

N = None

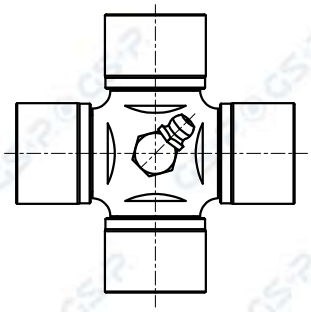

C = Center

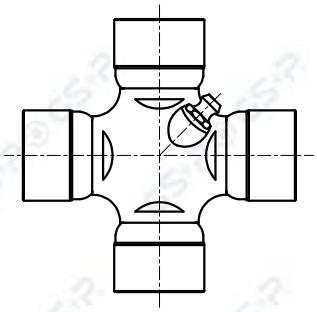

S = Side

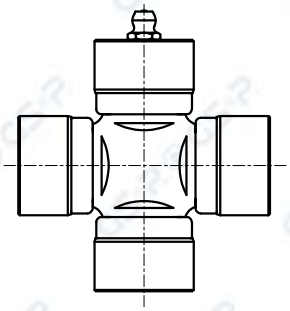

1B = 1Brg.

Type 1

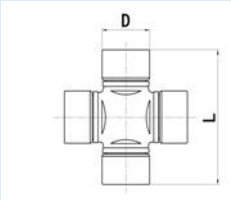

D	L	F	Lubricator Types	GSP Ref.
15.00	39.00	-	N	UJ900072
15.00	39.00	-	N	UJ900272
16.00	40.00	-	N	UJ900073
16.00	39.00	-	N	UJ900074
19.00	55.50	-	N	UJ900076
19.00	48.50	-	N	UJ900077
20.00	52.50	-	N	UJ900127
20.90	52.00	-	N	UJ900239
22.08	57.30	-	N	UJ900021
24.05	88.50	-	N	UJ900168
24.09	62.10	-	N	UJ900135
24.09	74.55	-	N	UJ900145
24.12	63.90	-	N	UJ900290
27.03	88.50	-	N	UJ900224
31.04	88.50	-	1B	UJ900147

Type 2

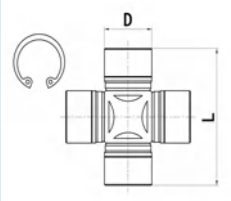

D	L	F	Lubricator Types	GSP Ref.
19.00	44.00	-	S	UJ900075
20.05	54.80	-	1B	UJ900151
22.00	54.80	-	C	UJ900319
23.82	61.60	-	S	UJ900059
23.82	61.30	-	N	UJ900205
23.83	61.30	-	S	UJ900212
23.84	61.20	-	1B	UJ900079
24.00	63.31	-	N	UJ900193
24.68	74.60	-	N	UJ900288
25.00	63.80	-	1B	UJ900080
25.00	63.80	-	N	UJ900262
25.02	76.70	-	S	UJ900081
25.02	76.44	-	N	UJ900318
26.00	71.00	-	N	UJ900154
26.00	71.00	-	N	UJ900155
26.99	81.75	-	S	UJ900208
27.00	74.60	-	S	UJ900058
27.00	81.80	-	S	UJ900071
27.00	81.78	-	S	UJ900085
27.00	70.90	-	N	UJ900146
27.00	92.00	-	N	UJ900148
27.00	82.00	-	1B	UJ900156
27.00	92.00	-	S	UJ900179
27.00	80.00	-	S	UJ900186
27.00	61.92	-	1B	UJ900194
27.00	81.78	-	1B	UJ900203
27.00	82.00	-	N	UJ900235
27.00	82.60	-	N	UJ900236
27.00	75.34	-	N	UJ900279

Type 2

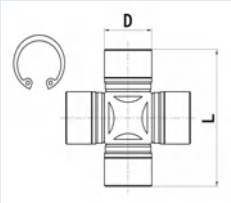

D	L	F	Lubricator Types	GSP Ref.
27.00	88.40	-	S	**UJ900280**
27.01	74.80	-	C	**UJ900159**
27.02	74.60	-	N	**UJ900195**
27.03	76.00	-	N	**UJ900188**
28.00	71.00	-	S	**UJ900088**
28.03	80.00	-	C	**UJ900150**
29.00	76.60	-	S	**UJ900090**
30.05	81.70	-	C	**UJ900199**
30.183	92.017	-	N	**UJ900158**
30.183	92.08	-	N	**UJ900227**
30.188	106.35	-	S	**UJ900049**
30.188	92.08	-	S	**UJ900123**
30.19	82.00	-	N	**UJ900200**
30.20	82.00	-	C	**UJ900144**
30.20	92.00	-	C	**UJ900152**
30.20	82.00	-	N	**UJ900161**
31.04	88.00	-	N	**UJ900167**
31.78	102.00	-	C	**UJ900204**
33.00	93.00	-	C	**UJ900097**
33.00	103.00	-	C	**UJ900281**
34.95	106.50	-	C	**UJ900100**
35.00	98.00	-	C	**UJ900101**
35.00	98.00	-	S	**UJ900102**
39.00	118.00	-	C	**UJ900106**
47.68	135.20	-	C	**UJ900108**
48.00	135.20	-	C	**UJ900109**
50.00	135.00	-	C	**UJ900110**
52.00	147.40	-	C	**UJ900113**
52.00	133.00	-	C	**UJ900114**
55.02	164.00	-	C	**UJ900115**
57.00	152.00	-	C	**UJ900117**
57.00	144.00	-	C	**UJ900118**
57.05	163.93	-	C	**UJ900313**
59.05	167.80	-	C	**UJ900119**
65.00	172.00	-	C	**UJ900120**
65.06	190.20	-	C	**UJ900314**

Type 3

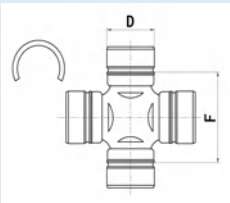

D	L	F	Lubricator Types	GSP Ref.
22.05	-	32.60	N	**UJ900289**
22.52	-	35.00	1B	**UJ900181**
25.00	-	41.20	1B	**UJ900182**
25.02	-	40.00	1B	**UJ900022**
26.00	-	53.60	S	**UJ900018**
26.00	-	42.00	1B	**UJ900064**
26.53	-	48.00	N	**UJ900206**
26.53	-	48.00	C	**UJ900228**

Type 3

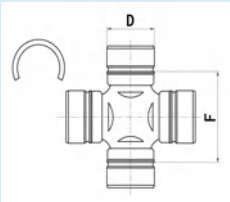

D	L	F	Lubricator Types	GSP Ref.
27.00	-	45.95	1B	**UJ900087**
27.02	-	46.00	N	**UJ900234**
28.02	-	53.10	S	**UJ900178**
28.02	-	48.30	C	**UJ900229**
28.60	-	60.20	S	**UJ900225**
29.00	-	49.00	C	**UJ900019**
29.00	-	49.00	N	**UJ900039**
29.00	-	49.00	1B	**UJ900067**
29.00	-	50.00	S	**UJ900165**
29.00	-	49.00	1B	**UJ900209**
29.03	-	69.00	N	**UJ900164**
29.03	-	69.00	1B	**UJ900210**
30.00	-	55.00	1B	**UJ900092**
30.00	-	55.10	C	**UJ900093**
30.03	-	71.12	C	**UJ900180**
30.20	-	52.50	N	**UJ900149**
30.20	-	52.60	N	**UJ900196**
32.00	-	56.98	C	**UJ900169**
32.00	-	61.00	S	**UJ900176**
38.00	-	57.00	C	**UJ900201**

Type 4

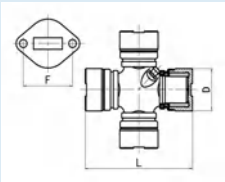

D	L	F	Lubricator Types	GSP Ref.
34.99	98.00	45.00	S	**UJ900104**
50.00	152.60	65.20	C	**UJ900305**

Type 5

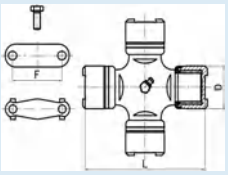

D	L	F	Lubricator Types	GSP Ref.
46.00	142.00	58.50	C	**UJ900107**

New applications (compared with catalogue 2025)

GSP Ref.	GSP Ref.	GSP Ref.	GSP Ref.	GSP Ref.	GSP Ref.	GSP Ref.
512676	PS901909	UJ900120				
537851S	PS901914	UJ900135				
538612	PS901915	UJ900148				
538628	PS901918	UJ900179				
538679	PS901920	UJ900193				
538980	PS901922	UJ900195				
539027	PS901923	UJ900196				
539040	PS901927	UJ900199				
539043	PS901928	UJ900200				
539057	PS901929	UJ900205				
539908S	PS901932	UJ900206				
539913	PS901933	UJ900212				
539923	PS901948	UJ900224				
539931S	PS901949	UJ900225				
539940	PS901951	UJ900227				
539943	PS901952	UJ900228				
539943S	PS901954	UJ900229				
539944S	PS901955	UJ900234				
539945S	PS901965	UJ900235				
539946S	PS901966	UJ900236				
539948	PS901967	UJ900239				
605161	PS901969	UJ900262				
605168	PS901970	UJ900272				
605200	PS901971	UJ900279				
605202	PS901982	UJ900280				
PS901787	PS901983	UJ900281				
PS901811	PS901984	UJ900288				
PS901816	PS901986	UJ900289				
PS901818	UJ900018	UJ900290				
PS901819	UJ900039	UJ900305				
PS901820	UJ900067	UJ900313				
PS901821	UJ900072	UJ900314				
PS901822	UJ900073	UJ900318				
PS901824	UJ900074	UJ900319				
PS901825	UJ900075					
PS901826	UJ900076					
PS901827	UJ900077					
PS901828	UJ900079					
PS901829	UJ900080					
PS901832	UJ900085					
PS901840	UJ900087					
PS901848	UJ900090					
PS901849	UJ900092					
PS901850	UJ900093					
PS901855	UJ900097					
PS901857	UJ900100					
PS901858	UJ900101					
PS901863	UJ900102					
PS901868	UJ900104					
PS901874	UJ900106					
PS901877	UJ900107					
PS901879	UJ900108					
PS901881	UJ900109					
PS901882	UJ900110					
PS901884	UJ900113					
PS901893	UJ900114					
PS901894	UJ900115					
PS901895	UJ900117					
PS901904	UJ900118					
PS901905	UJ900119					

GSP Group Headquarter
No.1 GaoXiang Road, Wenzhou, China
Tel: 86-577-8629-3120
Email: internationalsales@gsp.cn

GSP Germany Cologne (Business Center)
Leyboldstrasse 10, 50354 Huerth, Germany
Tel: 49-223-3808-8418
Fax: 49-223-1941-0282
Email: info@gsp-europe.com

GSP Germany Hamburg (Distribution Center)
Werkstrasse1, 22844 Norderstedt, Germany
Tel: 49-406-4669-9460
Email: gsp@elbex-hamburg.de

GSP Poland Gdansk (Distribution Center)
Elbląska 130, 80-718 Gdańsk, Poland

GSP N.A South Carolina (Business Center / Distribution Center)
2725 New Cut Road, Spartanburg, SC 29303, USA
Tel: 1-864-578-6900
Fax: 1-864-578-6978
Email: info@gsp-na.com

GSP N.A Arizona (Business Center / Distribution Center)
950 N. 119th Ave. Suite 100, Avondale, AZ 85323, USA
Tel: 1-480-418-3405
Fax: 1-562-376-8550
Email: info@gsp-na.com

GSP L.A. Florida (Business Center)
2600 S. Douglas Rd., PH 10, Coral Gables, FL 33134, USA
Tel: 1-305-446-7702
Email: info@gsplatinamerica.com

GSP Mexico Queretaro (Business Center)
Manuel Gomez Morin, No EXT. 3960, PISO 1 OFICINA 1D,
Centro Sur. Queretaro, C.P.: 76090
Tel: 52-442-2449414
Email: info@gsplatinamerica.com

GSP Mexico Queretaro (Distribution Center)
Privada del marqués lote 4a1 bodegas 6, 7 y 8, IV sección,
Parque Industrial Querétaro, CP. 76226

GSP Malaysia Johor (Manufacturing Center)
No. 18 (PLO 36), Jalan Teknologi 4, Taman Teknologi Johor,
81400 Senai, Johor, Malaysia
Tel: 86-577-86293120
Email: internationalsales@gsp.cn

LinkedIn
GSP Automotive Group

Facebook
GSP Automotive Group

Youtube
GSP Automotive Group

Instagram
gsp_automotive_group